2-10-83
Vol. 48 No. 29
Pages 6087-6310

# federal register

Thursday
February 10, 1983

## Selected Subjects

**Air Pollution Control**
Environmental Protection Agency

**Anchorage Grounds**
Coast Guard

**Aviation Safety**
Federal Aviation Administration

**Bridges**
Coast Guard

**Commodities Exchanges**
Commodity Futures Trading Commission

**Communications Common Carriers**
Federal Communications Commission

**Government Property Management**
General Services Administration

**Great Lakes**
Coast Guard

**Imports**
Food Safety and Inspection Service

**Income Taxes**
Internal Revenue Service

**Marine Safety**
Coast Guard

**Marketing Agreements**
Agricultural Marketing Service

**Meat and Poultry Inspection**
Food Safety and Inspection Service

CONTINUED INSIDE

# Selected Subjects

**FEDERAL REGISTER** Published daily, Monday through Friday, (not published on Saturdays, Sundays, or on official holidays), by the Office of the Federal Register, National Archives and Records Service, General Services Administration, Washington, D.C. 20408, under the Federal Register Act (49 Stat. 500, as amended; 44 U.S.C. Ch. 15) and the regulations of the Administrative Committee of the Federal Register (1 CFR Ch. I). Distribution is made only by the Superintendent of Documents, U.S. Government Printing Office, Washington, D.C. 20402.

The **Federal Register** provides a uniform system for making available to the public regulations and legal notices issued by Federal agencies. These include Presidential proclamations and Executive Orders and Federal agency documents having general applicability and legal effect, documents required to be published by Act of Congress and other Federal agency documents of public interest. Documents are on file for public inspection in the Office of the Federal Register the day before they are published, unless earlier filing is requested by the issuing agency.

The **Federal Register** will be furnished by mail to subscribers, free of postage, for $300.00 per year, or $150.00 for six months, payable in advance. The charge for individual copies is $1.50 for each issue, or $1.50 for each group of pages as actually bound. Remit check or money order, made payable to the Superintendent of Documents, U.S. Government Printing Office, Washington, D.C. 20402.

There are no restrictions on the republication of material appearing in the **Federal Register**.

Questions and requests for specific information may be directed to the telephone numbers listed under INFORMATION AND ASSISTANCE in the READER AIDS section of this issue.

**Medicaid**
Health Care Financing Administration

**Medicare**
Health Care Financing Administration

**Pesticides and Pests**
Environmental Protection Agency

**Radio**
Federal Communications Commission

**Railroad Safety**
Federal Railroad Administration

**Securities**
Federal Reserve System
Securities and Exchange Commission

**Supplemental Security Income**
Social Security Administration

**Vocational Rehabilitation**
Social Security Administration

**Water Pollution Control**
Environmental Protection Agency

# Contents

Federal Register
Vol. 48, No. 29
Thursday, February 10, 1983

**The President**
EXECUTIVE ORDERS
6087 African Development Bank (EO 12403)

**Executive Agencies**

**Agricultural Marketing Service**
RULES
6089 Oranges (navel) grown in Ariz. and Calif.

**Agriculture Department**
*See* Agricultural Marketing Service; Animal and Plant Health Inspection Service; Food Safety and Inspection Service; Forest Service.

**Alcohol, Drug Abuse, and Mental Health Administration**
NOTICES
Meetings; advisory committees:
6177 February; cancelled

**Animal and Plant Health Inspection Service**
RULES
Swine health protection:
6089 Enforcement; State status; interim; correction

**Civil Aeronautics Board**
NOTICES
6236 Meetings; Sunshine Act

**Coast Guard**
RULES
Great Lakes pilotage:
6114 Rates increase
Regattas and marine parades; safety of life:
6104 Del Rey to Puerto Vallarta Race
Safety zones:
6104 Elizabeth River, Norfolk, Va.
PROPOSED RULES
Anchorage regulations:
6136 Louisiana
Drawbridge operations:
6138 Washington
6137 Wisconsin
Regattas and marine parades; safety of life:
6135 Pacific Inter-Club Yacht Association Opening Day Parade

**Commerce Department**
*See* Foreign-Trade Zones Board; International Trade Administration.

**Commodity Futures Trading Commission**
PROPOSED RULES
6128 Domestic exchange-traded commodity options; domestic agricultural commodities options; advance notice

**Conservation and Renewable Energy Office**
NOTICES
6173 Consumer products, energy conservation program; representative average unit costs of residential energy sources; correction

**Customs Service**
NOTICES
Petroleum products, approved public gauger:
6234 Chem Coast, Inc.

**Education Department**
NOTICES
Grant applications and proposals; closing dates:
6150 Handicapped children, severly; innovative programs

**Energy Department**
*See also* Conservation and Renewable Energy Office; Federal Energy Regulatory Commission.
NOTICES
Grants; availability, etc.:
6151 Television documentary film on fusion energy, development and production.

**Environmental Protection Agency**
RULES
Air quality implementation plans; approval and promulgation; various States:
6105 Nevada
6106 North Carolina
PROPOSED RULES
Water pollution; effluent guidelines for point source categories:
6268 Coil coating; canmaking plants
6250 Pesticide chemicals
NOTICES
Air quality; prevention of significant deterioration (PSD):
6173 Final determinations; permits denied

**Federal Aviation Administration**
RULES
Air traffic operating and flight rules:
6102 Nontransponder operations in certain controlled airspace; reduction in required advance notice
Airworthiness directives:
6096 Bell
6097 Garlick
6100 Transition areas
6100, 6101 VOR Federal airways (2 documents)
PROPOSED RULES
6125-6128 Transition areas (4 documents)
6125 Transition areas and control zones
NOTICES
Advisory circulars; availability, etc.:
6226 Airplanes, small; doors between pilot's compartment and passenger cabin

Meetings:
6226, 6227 Aeronautics Radio Technical Commission (2 documents)

**Federal Communications Commission**
RULES
Common carrier services:
6116 AT&T et al.; new CPE provided under tariff to meet needs of disabled persons
Radio services, special:
6119 Maritime services; coast station classes, etc.

**Federal Election Commission**
NOTICES
6236 Meetings; Sunshine Act

**Federal Energy Regulatory Commission**
NOTICES
Hearings, etc.:
6159 ANR Storage Co.
6160 Arkansas Power & Light Co.
6152 Carnegie Natural Gas Co.
6161 Centel Corp.
6161 Connecticut Light & Power Co.
6152 Cookeville, Tenn.
6161 Idaho Power Co.
6152 Kentucky Utilities Co.
6153 Michigan Wisconsin Pipe Line Co.
6162 Michigan Wisconsin Pipe Line Co. et al.
6165 Minnesota Department of Natural Resources et al.
6162 Montana-Dakota Utilities Co.
6163 Natural Gas Pipeline Co. of America
6153 Northern Natural Gas Co.
6154 Northwest Central Pipeline Corp.
6163 Public Service Co. of New Mexico
6163, 6164 Southern California Edison Co. (3 documents)
6164 Sun Exploration & Production Co.
6154 Texas Eastern Transmission Corp.
6155 Texas Gas Transmission Corp.
6155 Tidal Transmission Co.
6164 Transcontinental Gas Pipe Line Corp. et al.
6155 Transwestern Pipeline Co.
6156 United States Natural Gas Corp.
6156 West Florida Electric Cooperative Association, Inc., et al.
6158 West Lake Arthur Corp.
6158 Western Slope Gas Co.
Small power production and cogeneration facilities; qualifying status; certification applications, etc.:
6165 Pacific Cogeneration Co.

**Federal Highway Administration**
RULES
6103 Truck size and weight; meeting

**Federal Maritime Commission**
NOTICES
Complaints filed:
6174 East Coast Colombia Conference et al.
6236 Meetings; Sunshine Act

**Federal Railroad Administration**
RULES
6123 Railroad employees; hours of service; recordkeeping requirements
6122 Railroad operating rules; blue signal protection of workmen; recordkeeping requirements

**Federal Reserve System**
RULES
6094 OTC margin stocks; list (Regulations G, T, U, and X)
NOTICES
Applications, etc.:
6174 First Clyde Banc Corp. et al.
Bank holding companies; proposed de novo nonbank activities:
6174 Citicorp et al.

**Food Safety and Inspection Service**
RULES
Meat and poultry inspection:
6090 Cooling and retort water treatment agents
6091 Imported meat products requirements

**Foreign-Trade Zones Board**
NOTICES
Applications, etc.:
6145 Massachusetts

**Forest Service**
NOTICES
Environmental statements; availability, etc.:
6145 Santa Fe National Forest, N. Mex.; Western Spruce Budworm management program

**General Services Administration**
*See also* National Archives and Records Service.
RULES
Property management:
6107 ADP and telecommunications; computer performance evaluation and ADP simulation
NOTICES
6175 Privacy Act; systems of records

**Health and Human Services Department**
*See* Alcohol, Drug Abuse, and Mental Health Administration; Health Care Financing Administration; Health Resources and Services Administration; Public Health Service; Social Security Administration.

**Health Care Financing Administration**
RULES
Medicare:
6108 Private rooms; elimination of indirect subsidy
PROPOSED RULES
Medicare and Medicaid:
6304 Withholding Federal share of payments to recover Medicare or Medicaid overpayments
NOTICES
Medicare and medicaid:
6177 Rural health clinic payment limits and productivity screening guidelines; correction

**Health Resources and Services Administration**
NOTICES
Committees; establishment, renewals, terminations, etc.:
6177 Health Planning and Development National Council

6179 Indian tribal entities; list
Indian tribes, acknowledgment of existence determinations, etc.:
6177 Narragansett Indian Tribe of Rhode Island
Liquor and tobacco sale or distribution ordinance:
6180 Moapa Band of Paiutes, Nev.

**Interior Department**
*See* Indian Affairs Bureau; Land Management Bureau; Minerals Management Service; Surface Mining Reclamation and Enforcement Office.

**Internal Revenue Service**
PROPOSED RULES
Income taxes:
6134 Inventory value; 3-year averaging for increases

**International Trade Administration**
NOTICES
Countervailing duties:
6146 Stainless steel sheet, strip, and plate from United Kingdom
Environmental statements; availability, etc.:
6145 International Exposition, 1992; Chicago, Ill.

**Interstate Commerce Commission**
NOTICES
Motor carriers:
6201 Finance applications
6202, 6203 Permanent authority applications (2 documents)
6203 Permanent authority applications; restriction removals
Motor carriers; control and purchase exemptions, etc.:
6201 Cross Country Corp. et al.
6201 Glenn's Truck Service, Inc., et al.
Rail carriers:
6210 Union Pacific Railroad Co.; frozen food transportation, exemption petition
Railroad operation, acquisition, construction, etc.:
6209 Consolidated Rail Corp. et al.
Railroad services abandonment:
6209 Burlington Northern Railroad Co.

**Land Management Bureau**
RULES
Public land orders:
6113, 6114 Oregon; correction (4 documents)
NOTICES
Classification of public lands:
6181 Arizona
Coal leases, exploration licenses, etc.:
6181 New Mexico
Conveyance of public lands:
6181 Idaho
6183 Montana
Environmental statements; availability, etc.:
6184 Combined hydrocarbon development, Utah
6183 Shale oil projects in Garfield County, Colo.; Mobil Oil Co. et al.
Exchange of public lands for private land:
6185 Montana; correction
Sale of public lands:
6185 Arizona

**Minerals Management Service**
NOTICES
Outer Continental Shelf; oil, gas, and sulphur operations:
6199 Norton Basin; leasing systems
6186 Norton Basin; oil and gas lease sale

**National Archives and Records Service**
PROPOSED RULES
6139 National security information program; implementation

**National Labor Relations Board**
NOTICES
Organization and functions:
6210 General Counsel Office; discontinuance of preparation of subject matter classified index to decisions having no precedential significance

**National Transportation Safety Board**
NOTICES
6211 Accident reports, safety recommendations, and responses, etc.; availability

**Postal Rate Commission**
NOTICES
6213 Visits to postal facilities

**Postal Service**
NOTICES
6236 Meetings; Sunshine Act

**Public Health Service**
NOTICES
Organization, functions, and authority delegations:
6177 Centers for Disease Control; Hepatitis and Viral Enteritis Division (Phoenix, Ariz.), abolishment; transfer of functions

**Research and Special Programs Administration**
NOTICES
Hazardous materials:
6231, 6232 Applications; exemptions, renewals, etc. (2 documents)

**Securities and Exchange Commission**
PROPOSED RULES
6130 Brokers and dealers, nonmember; initial information form and fees
NOTICES
Hearings, etc.:
6213 DCS Capital Corp.
6216 Wellington Fund, Inc., et al.
Self-regulatory organizations; proposed rule changes:
6217 Midwest Clearing Corp.
6218 Midwest Securities Trust Co.
6219 Options Clearing Corp.
6224 Pacific Stock Exchange, Inc.
Self-regulatory organizations; unlisted trading privileges:
6213 Cincinnati Stock Exchange
6218 Midwest Stock Exchange, Inc.

**Social Security Administration**
RULES
Social security benefits and supplemental security income:

**Social Security Administration**
RULES
Social security benefits and supplemental security income:
6286 Vocational rehabilitation services, successful; payment to States
PROPOSED RULES
Supplemental security income:
6133 Eligibility; individuals living in or enrolled at public educational institutions

**State Department**
NOTICES
Meetings:
6225 International Radio Consultative Committee
6225 Shipping Coordinating Committee

**Surface Mining Reclamation and Enforcement Office**
NOTICES
Surface coal mining operations; unsuitable lands, petitions; designations, etc.:
6201 Wyoming; correction

**Synthetic Fuels Corporation**
NOTICES
6236 Meetings; Sunshine Act

**Tennessee Valley Authority**
NOTICES
6226 Agency forms submitted to OMB for review
6236 Meetings; Sunshine Act

**Transportation Department**
*See also* Coast Guard; Federal Aviation Administration; Federal Highway Administration; Federal Railroad Administration; Research and Special Programs Administration; Urban Mass Transportation Administration.
NOTICES
6227 Agency forms submitted to OMB for review
6228 Frontier Airlines, Inc.; Jackson Hole Airport, Wyo.; renewal of operations specifications

**Treasury Department**
*See also* Customs Service; Internal Revenue Service.
NOTICES
6234 Agency forms submitted to OMB for review
6234 Paperwork reduction, conference

**Urban Mass Transportation Administration**
PROPOSED RULES
6143 Uniform system of accounts and records and reporting system; waiver of grant recipient passenger surveys reporting

**Veterans Administration**
NOTICES
6236 Agency forms submitted to OMB for review
Meetings:
6234 Health-Related Effects of Herbicides Advisory Committee

**Separate Parts in This Issue**

**Part II**
6250 Environmental Protection Agency

**Part III**
6268 Environmental Protection Agency

**Part IV**
6286 Department of Health and Human Services, Social Security Administration

**Part V**
6304 Department of Health and Human Services, Health Care Financing Administration

## CFR PARTS AFFECTED IN THIS ISSUE

A cumulative list of the parts affected this month can be found in the Reader Aids section at the end of this issue.

**3 CFR**
Executive Orders:
11269 (Amended by EO 12403) ... 6087
12403 ... 6087

**7 CFR**
907 ... 6089

**9 CFR**
166 ... 6089
301 ... 6090
318 ... 6090
327 ... 6091
381 ... 6090

**12 CFR**
207 ... 6094
220 ... 6094
221 ... 6094
224 ... 6094

**14 CFR**
39 (2 documents) ... 6096, 6097
71 (3 documents) ... 6100, 6101
91 ... 6102
Proposed Rules:
71 (5 documents) ... 6125–6128

**17 CFR**
Proposed Rules:
33 ... 6128
240 ... 6130

**20 CFR**
404 ... 6286
416 ... 6286
Proposed Rules:
416 ... 6133

**23 CFR**
Ch. I ... 6103

**26 CFR**
Proposed Rules:
1 ... 6134

**33 CFR**
100 ... 6104
165 ... 6104
Proposed Rules:
100 ... 6135
110 ... 6136
117 (2 documents) ... 6137, 6138

**40 CFR**
52 (2 documents) ... 6105, 6106
Proposed Rules:
455 ... 6250
465 ... 6268

**41 CFR**
101-36 ... 6107
Proposed Rules:
105-61 ... 6139

**42 CFR**
405 ... 6108
Proposed Rules:
405 ... 6304
447 ... 6304

**43 CFR**
Public Land Orders:
6006 (Corrected by PLO 6347) ... 6113
6111 (Corrected by PLO 6350) ... 6114
6286 (Corrected by PLO 6349) ... 6114
6305 (Corrected by PLO 6348) ... 6113
6347 ... 6113
6348 ... 6113
6349 ... 6114
6350 ... 6114

**46 CFR**
401 ... 6114

**47 CFR**
64 ... 6116
81 ... 6119
83 ... 6119

**49 CFR**
218 ... 6122
228 ... 6123
Proposed Rules:
630 ... 6143

Federal Register
Vol. 48, No. 29
Thursday, February 10, 1983

# Presidential Documents

Title 3—

The President

Executive Order 12403 of February 8, 1983

## African Development Bank

By the authority vested in me as President by the Constitution and statutes of the United States of America, including Section 1 of the International Organizations Immunities Act (22 U.S.C. 288), Reorganization Plan No. 4 of 1965, and the African Development Bank Act (22 U.S.C. 290i), and in order to facilitate United States participation in the African Development Bank, it is hereby ordered as follows:

**Section 1.** The African Development Bank, in which the United States participates pursuant to Sections 1332–1342 of Public Law 97–35 and the Agreement Establishing the African Development Bank, is hereby designated as a public international organization entitled to enjoy the privileges, exemptions, and immunities conferred by the International Organizations Immunities Act. This designation is not intended to abridge in any respect the privileges and immunities which such organization has acquired or may acquire by treaty or Congressional action. This designation shall not affect in any way the applicability of Section 1 of Article 52 of the Agreement, Article 57 of such Agreement or the Declaration made by the United States pursuant to Article 64 of the Agreement.

**Sec. 2.** Executive Order No. 11269, as amended, is further amended by deleting "and African Development Fund" and adding ", African Development Fund, and African Development Bank" in Sections 2(c), 3(d) and 7, respectively.

**Sec. 3.** The functions vested in the President by Sections 1333(c), 1334, 1338(a) and 1341(b) of Public Law 97–35 (22 U.S.C. 290i–1(c), 290i–2, 290i–6(a), and 290i–9(b)) are delegated to the Secretary of the Treasury.

Ronald Reagan

THE WHITE HOUSE,
*February 8, 1983.*

[FR Doc. 83-3864
Filed 2-9-83; 11:00 am]
Billing code 3195-01-M

**Editorial Note:** The President's remarks on signing EO 12403, and a letter to the President of the African Development Bank on U.S. membership in the Bank, both dated Feb. 8, 1983, are printed in the *Weekly Compilation of Presidential Documents* (vol. 19, no. 6)

# Rules and Regulations

Federal Register
Vol. 48, No. 29
Thursday, February 10, 1983

This section of the FEDERAL REGISTER contains regulatory documents having general applicability and legal effect, most of which are keyed to and codified in the Code of Federal Regulations, which is published under 50 titles pursuant to 44 U.S.C. 1510.
The Code of Federal Regulations is sold by the Superintendent of Documents. Prices of new books are listed in the first FEDERAL REGISTER issue of each month.

## DEPARTMENT OF AGRICULTURE

### Agricultural Marketing Service

### 7 CFR Part 907

**[Navel Orange Reg. 564, Amdt. 1; Navel Orange Reg. 565]**

### Navel Oranges Grown in Arizona and Designated Part of California; Limitation of Handling

**AGENCY:** Agricultural Marketing Service, USDA.

**ACTION:** Final rule.

**SUMMARY:** This regulation establishes the quantity of fresh California-Arizona navel oranges that may be shipped to market during the period February 11–17, 1983, and increases the quantity of such oranges that may be so shipped during the period February 4–10, 1983. Such action is needed to provide for orderly marketing of fresh navel oranges for the period specified due to the marketing situation confronting the orange industry.

**DATES:** This regulation becomes effective February 11, 1983, and the amendment is effective for the period February 4–10, 1983.

**FOR FURTHER INFORMATION CONTACT:** William J. Doyle, 202–447–5975.

**SUPPLEMENTARY INFORMATION:**

Findings

This rule has been reviewed under USDA procedures and Executive Order 12291 and has been designated a "non-major" rule. William T. Manley, Deputy Administrator, Agricultural Marketing Service, has determined that this action will not have a significant economic impact on a substantial number of small entities. This action is designed to promote orderly marketing of the California-Arizona navel orange crop for the benefit of producers and will not substantially affect costs for the directly regulated handlers.

This regulation and amendment are issued under the marketing agreement, as amended, and Order No. 907, as amended (7 CFR Part 907), regulating the handling of navel oranges grown in Arizona and designated part of California. The agreement and order are effective under the Agricultural Marketing Agreement Act of 1937, as amended (7 U.S.C. 601–674). The action is based upon the recommendation and information submitted by the Navel Orange Administrative Committee and upon other available information. It is hereby found that this action will tend to effectuate the declared policy of the Act.

This action is consistent with the marketing policy for 1982–83. The marketing policy was recommended by the committee following discussion at a public meeting on September 21, 1982. The committee met again publicly on February 8, 1983 at Los Angeles, California, to consider the current and prospective conditions of supply and demand and recommended a quantity of navel oranges deemed advisable to be handled during the specified weeks. The committee reports the demand for navel oranges is good.

It is further found that it is impracticable and contrary to the public interest to give preliminary notice, engage in public rulemaking, and postpone the effective date until 30 days after publication in the **Federal Register** (5 U.S.C. 553), because of insufficient time between the date when information became available upon which this regulation and amendment are based and the effective date necessary to effectuate the declared policy of the Act. Interested persons were given an opportunity to submit information and views on the regulation at an open meeting, and the amendment relieves restrictions on the handling of navel oranges. It is necessary to effectuate the declared purposes of the Act to make these regulatory provisions effective as specified, and handlers have been apprised of such provisions and the effective time.

List of Subjects in 7 CFR Part 907

Marketing agreements and orders, California, Arizona, Oranges (navel).

**PART 907—[AMENDED]**

1. Section 907.865 is added as follows:

**§ 907.865 Navel Orange Regulation 565.**

The quantities of navel oranges grown in California and Arizona which may be handled during the period February 11, 1983 through February 17, 1983, are established as follows:

(1) District 1: 1,800,000 cartons;
(2) District 2: Unlimited cartons;
(3) District 3: Unlimited cartons;
(4) District 4: Unlimited cartons.

2. Section 907.864 Navel Orange Regulation 564 (48 FR 4767), is hereby amended to read:

**§ 907.864 Navel Orange Regulation 564.**

* * * * *

(1) District 1: 1,900,000 cartons;
(2) District 2: Unlimited cartons;
(3) District 3: Unlimited cartons;
(4) District 4: Unlimited cartons.

(Secs. 1–19, 48 Stat. 31, as amended; 7 U.S.C. 601–674)

Dated: February 9, 1983.

**Russell L. Hawes,**

*Acting Deputy Director, Fruit and Vegetable Division, Agricultural Marketing Service.*

[FR Doc. 83–3885 Filed 2–9–83; 11:45 am]

BILLING CODE 3410–02–M

### Animal and Plant Health Inspection Service

### 9 CFR Part 166

**[Docket No. 83–003]**

### State Status Regarding Enforcement of the Swine Health Protection Act; Correction

**AGENCY:** Animal and Plant Health Inspection Service, USDA.

**ACTION:** Final rule; correction.

**SUMMARY:** This document corrects the list of States that have primary enforcement responsibilities under the Swine Health Protection Act by adding the State of South Dakota. This action is needed to correct a proofreading oversight which resulted in omitting the State of South Dakota.

**EFFECTIVE DATE:** February 10, 1983.

**FOR FURTHER INFORMATION CONTACT:** Dr. R. D. Good, Special Diseases Staff, Veterinary Services, APHIS, USDA, 6505 Belcrest Road, Federal Building, Room

825, Hyattsville, MD 20782, 301-436-8487.

**SUPPLEMENTARY INFORMATION:** On December 30, 1982, there was published in the **Federal Register** (47 FR 58217-58218) an interim rule listing the States that have primary enforcement responsibility under the Act during any period for which the Secretary of the United States Department of Agriculture determines that the State has and is enforcing laws and regulations which meet the minimum standards of the Act and regulations promulgated thereunder. As a result of a proofreading oversight, the State of South Dakota was omitted from this list of States in § 166.14(c), which appeared at 47 FR 58213. This document corrects this oversight by adding the State of "South Dakota" in 9 CFR 166.14(c).

**List of Subjects in 9 CFR Part 166**

Animal diseases, Hogs, Garbage, African swine fever, Foot-and-mouth disease, Hog cholera, Swine vesicular disease, Vesicular exanthema of swine.

## PART 166—SWINE HEALTH PROTECTION

Accordingly, Part 166, Title 9, Code of Federal Regulations, 9 CFR 166.14(c), *State status*, is corrected by adding the State "South Dakota" after "South Carolina" and before "Tennessee."

(Sec. 511, Pub. L. 96-592, 94 Stat. 3451 (7 U.S.C. 3802); secs. 4, 5, 9, 12, Pub. L. 96-468, 94 Stat. 2229 (7 U.S.C. 3803, 3804, 3808, 3811); 45 FR 85696, 46 FR 7266)

Done at Washington, D.C., this 4th day of February 1983.

**K. R. Hook,**

*Acting Deputy Administrator.*

[FR Doc. 83-3545 Filed 2-9-83; 8:45 am]

BILLING CODE 3410-34-M

---

## Food Safety and Inspection Service

## 9 CFR Parts 301, 318 and 381

**[Docket Number 80-034F]**

## Cooling and Retort Water Treatment Agents

**AGENCY:** Food Safety and Inspection Service, USDA.

**ACTION:** Final rule.

**SUMMARY:** This final rule amends the Federal meat and poultry products inspection regulations by deleting cooling and retort water treatment agents from the list of substances that are approved for use, directly or indirectly, in the preparation of meat and poultry products. The Food Safety and Inspection Service (FSIS) has determined that these agents are not likely to become components of the regulated products and, therefore, are no longer to be treated as a "class of (food) substance," but rather as nonfood compounds.

**EFFECTIVE DATE:** March 14, 1983.

**FOR FURTHER INFORMATION CONTACT:** Mr. Donald D. Derr, Deputy Director, Food Ingredient Assessment Division, Science, Food Safety and Inspection Service, U.S. Department of Agriculture, Washington, DC 20250, (202) 447-7680.

**SUPPLEMENTARY INFORMATION:**

### Executive Order 12291

The Agency has made a determination that this final rule is not a "major rule" under Executive Order 12291. It will not result in an annual effect on the economy of $100 million or more; a major increase in costs or prices for consumers, individual industries, Federal, State, or local government agencies or geographic regions; or significant adverse effects on competition, employment, investment, productivity, innovation, or the ability of United States-based enterprises to compete with foreign-based enterprises in domestic or export markets.

The sole alternative considered during the development of this rule was to maintain the status quo. Under this final rule, meat and poultry processors will have available a wider variety of permissible nonfood compounds. It is anticipated that this added flexibility will result in cost savings for industry and consumers.

### Effect on Small Entities

The Administrator has determined that this rule will not have a significant economic impact on a substantial number of small entities, as defined by the Regulatory Flexibility Act, Pub. L. 96-354 (5 U.S.C. 601). This final rule removes cooling and retort water treatment agents as a "class of substance" used in the preparation of meat and poultry products, classifying them instead as nonfood compounds.

### Background

During the process of cooking and cooling containers of meat and poultry products, dissolved minerals and oxygen in the water used for these processes may react with the cans and cause them to become stained. Staining can be avoided by adding chemical agents to the water. These added substances also control corrosion and deposit formation on surfaces of the processing equipment. The substances permitted for addition to cooling and retort water are currently listed in § 318.7 of the Federal meat inspection regulations (9 CFR 318.7) and § 381.147 of the poultry products inspection regulations (9 CFR 381.147). These sections list substances approved for use in the preparation of meat and poultry products.

Cooling and retort water treatment agents were added to the chart of approved substances in § 318.7 (9 CFR 318.7) in August 1966, because of concern that these substances might enter the food during its preparation. In 1972 the Federal poultry products inspection regulations were amended to include cooling and retort water treatment agents in the chart of approved substances in § 381.147 (9 CFR 381.147), in order to standardize the meat and poultry regulations.

Generally, the substances in §§ 318.7 and 381.147 (9 CFR 318.7 and 381.147) are food additives approved for use in food by the Food and Drug Administration (FDA) and listed for specific uses in meat and poultry products by USDA. Each such listing, therefore, requires that petitions, supported by technological data as necessary, be sent to both agencies demonstrating the safety and the technological function of the substance under intended conditions of use. However, cooling and retort water treatment agents are not currently regulated by FDA as "food additives." FDA has stated that substances used in retort and cooling canals are not food additives since there is no reasonable expectation that they become components of food.

As there is no evidence that these agents become food components, and since FDA is not regulating these substances as food additives, FSIS has determined that its regulation of these substances in §§ 318.7 and 381.147 is inappropriate.

### Proposal

On August 3, 1982, FSIS published a proposed rule in the **Federal Register** (47 FR 33517) to delete cooling and retort water agents from the list of approved food additives, and all references to these agents as food additives, that appear in the Federal meat and poultry products inspection regulations. Under the proposal, FSIS would continue to evaluate cooling and retort water treatment agents as other nonfood compounds used in official establishments to minimize the possibility that their presence in the establishment would result in the products becoming adulterated within the meaning of the Federal Meat Inspection Act (21 U.S.C. 601 *et seq.*) or

the Poultry Products Inspection Act (21 U.S.C. 451 *et seq.*).

The proposal also included a new definition of "nonfood compounds" for placement in the Federal meat and poultry products inspection regulations. The current definition in the poultry inspection regulations is inadequate, and the term is not defined in the meat inspection regulations.

In response to the proposal, FSIS received three comments—two from industry associations and one from a canning company. The commenters fully supported the proposal and concurred with FSIS' determination that cooling and retort water treatment agents will unlikely ever become components of meat and poultry products.

Therefore, FSIS hereby adopts the proposal as published. FSIS will monitor the use of cooling and retort water agents, as well as other nonfood compounds used in official establishments, and will determine, at a future date, the need for specific instructions to program employees and for regulations regarding such nonfood compounds. In the the interim, questions regarding specific nonfood substances used in official establishments should be forwarded to the Food Ingredient Assessment Division, Science, Food Safety and Inspection Service, U.S. Department of Agriculture, Washington, DC 20250.

**List of Subjects**

*9 CFR Part 301*

Meat inspection, Definitions.

*9 CFR Part 318*

Meat inspection, Preparation of products, Official establishments.

*9 CFR Part 381*

Meat inspection, Definitions, Preparation of products, Official establishments.

**Final Rule**

The Federal meat and poultry products inspection regulations are revised as follows:

## PART 301—[AMENDED]

## PART 318—[AMENDED]

1. The authority citation for Parts 301 and 318 reads as follows

**Authority:** 34 Stat. 1260, 79 Stat. 903, as amended, 81 Stat. 584, 84 Stat. 91, 438; 21 U.S.C. 71 *et seq.*, 601 *et seq.*, 33 U.S.C. 1254.

2. Section 301.2 of the Federal meat inspection regulations (9 CFR 301.2) is amended by adding a new paragraph (www) as follows:

**§ 301.2 Definitions.**

* * * * *

(www) *Nonfood compound.* Any substance proposed for use in official establishments, the intended use of which will not result, directly or indirectly, in the substance becoming a component or otherwise affecting the characteristics of meat and meat food products, excluding labeling and packaging materials as covered in Part 317 of the subchapter.

* * * * *

3. Section 318.1(d) of the Federal meat inspection regulations (9 CFR 318.1(d)) is revised to read as follows:

**§ 318.1 Products and other articles entering official establishments.**

* * * * *

(d) Containers of preparations which enter any official establishment for use in hog scalding water or in denuding of tripe shall bear labels showing the chemical names of the preparations. In the case of any preparation containing any of the chemicals which are specifically limited by § 318.7(c)(4) as to amount permitted to be used, the labels on the containers must also show the percentage of each such chemical in the preparation and must provide dilution directions which prescribe the maximum allowable use concentration of the preparations.

* * * * *

4. The chart in § 318.7(c)(4) of the Federal meat inspection regulations (9 CFR 318.7(c)(4)) is amended by removing the "class of substance" identified as "cooling and retort water treatment agents" and all information listed under this class of substance.

## PART 381—[AMENDED]

5. The authority citation for Part 381 reads as follows:

**Authority:** Sec. 14, Poultry Products Inspection Act, as amended by Wholesome Poultry Products Act (21 U.S.C. 451 *et seq.*); Talmadge-Aiken Act of September 28, 1962 (7 U.S.C. 450); and subsection 21 (b), Federal Water Pollution Control Act, as amended by Pub. L. 91-224 and by other laws (33 U.S.C. 1254).

6. Section 381.1(b)(32) of the poultry products inspection regulations (9 CFR 381.1(b)(32)) is revised to read as follows:

**§ 381.1 Definitions.**

* * * * *

(b) * * *

(32) *Nonfood compounds.* Any substance proposed for use in official establishments, the intended use of which will not result, directly or indirectly, in the substance becoming a component or otherwise affecting the characteristics of poultry or poultry products, excluding labeling and packaging materials as covered in Subpart N of this part.

* * * * *

**§ 381.147 [Amended]**

7. The chart in § 381.147(f)(3) of the poultry products inspection regulations (9 CFR 381.147(f)(3)) is amended by removing the "class of substance" identified as "cooling and retort water treatment agents" and all information listed under this class of substance.

Done at Washington, DC, on February 1, 1983.

**Donald L. Houston,**

*Administrator, Food Safety and Inspection Service.*

[FR Doc. 83-3695 Filed 2-9-83; 8:45 am]

BILLING CODE 3410-DM-M

---

**9 CFR Part 327**

**[Docket No. 82-005F]**

## Requirements for Imported Products

**AGENCY:** Food Safety and Inspection Service, USDA.

**ACTION:** Final rule.

**SUMMARY:** This final rule implements the provisions of the Agriculture and Food Act of 1981 that amended the Federal Meat Inspection Act. This rule amends the Federal meat inspection regulations to clarify that the inspection, sanitation, quality, species verification and residue standards applied to products (*i.e.*, carcasses, parts of carcasses, and meat and meat food products of cattle, sheep, swine, goats, horses, mules and other species capable of use as human food) offered for importation into the United States must be at least "equal to" the standards applied to such domestic products produced in the United States. This final rule also requires that all countries that wish to establish or maintain eligibility to export products to the United States implement a residue testing program. Residue testing must be conducted on the internal organs and fat, as appropriate, for the detection of residues in the carcasses of meat and meat food products being offered for importation into the United States.

**EFFECTIVE DATE:** March 14, 1983.

**FOR FURTHER INFORMATION CONTACT:** Dr. Grace Clark, Foreign Programs, International Programs, Food Safety and Inspection Service, U.S. Department of Agriculture, Washington, D.C. 20250, (202) 447-6971.

**SUPPLEMENTARY INFORMATION:**

**Executive Order 12291**

The Administrator has determined in accordance with Executive Order 12291 that this final rule is not a "major rule". It will not result in an annual effect on the economy of $100 million or more. There will be no major increase in costs or prices for consumers, individual industries; Federal, State or local government agencies, or geographic regions, and will not have a significant adverse effect on competition, employment, investment, productivity, innovation or the ability of United States-based enterprises to compete with foreign-based enterprises in domestic or export markets. The purpose of this regulation is to clarify and conform existing regulations to Public Law 97-98, the Agriculture and Food Act of 1981 which amended section 20 of the Federal Meat Inspection Act. The principal impact of this rule is on foreign countries exporting meat products to the United States and is not expected to be substantial. If any portion of the increased cost was not absorbed by the exporting country and was passed along to the United States, such cost should be quite small and should not have a substantial impact on the domestic economy.

**Effect on Small Entities**

The Administrator has determined that this final rule will not have a significant economic impact on a substantial number of small entities as defined by the Regulatory Flexibility Act, Pub. L. 96-354 because to the extent it involves any costs, those costs would be borne primarily by the exporting country. Those foreign countries offering meat and meat food products for exportation to the United States must have an inspection system at least "equal to" that of the United States, and most already have in place the programs necessary to comply with this regulation. Those countries requiring certain modifications to their systems should be able to develop the necessary programs at a minimal cost to them. Domestic businesses should incur little or no additional costs, either directly or indirectly.

**Background**

Pursuant to the Federal Meat Inspection Act (FMIA) (21 U.S.C. 601 *et seq.*), the Secretary of Agriculture is responsible for administering the programs which are designed to assure that products distributed to consumers are wholesome, not adulterated, properly marked, labeled, and packaged. In order to fulfill this obligation, the Secretary has delegated to the Administrator of the Food Safety and Inspection Service (FSIS), the authority to issue regulations and implement appropriate procedures to ensure compliance with the requirements of the FMIA. The regulations addressing imported products are codified at 9 CFR Part 327. In these regulations the Administrator has established procedures by which foreign countries desiring to export meat or meat food products to the United States may become eligible to do so. More extensive background information on foreign programs is found in the "Supplementary Information" section of the proposal.

**Proposal**

On July 7, 1982, the Agency published a proposed rule, 47 FR 29685-29688, to implement the provisions of Pub. L. 97-98, the Agriculture and Food Act of 1981, concerning imported meat and meat food products. Section 1122 of the Farm Bill (21 U.S.C. 620(f)) amends section 620 of the FMIA (21 U.S.C. 620) by adding a new subparagraph (f) which requires that all imported products be subject to the same standards as domestic products with regard to inspection, sanitation, quality, species verification and residue. The Secretary is directed to enforce the provisions of the new section through the imposition of random inspection for species verification and residues. Additionally, the exporting country must provide for the random sampling and testing of internal organs and fat as appropriate for testing for residues in the carcasses at the point of slaughter. The Agency proposed that Part 327 of the Federal meat inspection regulations (9 CFR Part 327) be amended to include the following provisions:

(1) That the inspection, sanitary, quality, species verification, and residue standards applied to imported meat and meat food products must be at least "equal to" the standards applied to domestic product; and

(2) That foreign countries wishing to establish and/or maintain eligibility to export product to the United States must maintain a program to test for residues in the internal organs and fat of carcasses from which meat and meat food products intended to be offered for importation into the United States are produced.

**Comments**

The Agency received 22 comments in response to the proposal, 19 in favor and 3 opposed. The comments were submitted by Trade Associations, private citizens, State Universities, meat producers, a meat packer, a State Department of Agriculture, and a United States Representative. The comments discussed 5 general issue areas:

(1) Residue testing by the foreign inspection programs;

(2) Cost of inspection;

(3) Economic advantage imported meat and meat food products maintain over state inspected meat and meat food products;

(4) Labeling as to country of origin; and

(5) Consumer education regarding imported products. The Agency's responses are as follows.

1. *Residue testing by the foreign inspection program.* Two commentators expressed concern about the proposed requirement that each exporting country implement a residue testing program that includes the random sampling of internal organs and fat at the point of slaughter for potential contaminants. The thrust of both comments was that the Agency must participate in the determination of those types of residues for which testing ought to be conducted. One commentator specified that the burden of the residue testing program ought to be on the exporting country, providing there is adequate supervision and monitoring of the program to assure that the resulting product complies with established standards. The other commentator stressed the importance of the random testing, the adequacy of the testing procedures, and the need for documentation of those testing procedures that have not yet been approved in the United States.

The Agency agrees with both commentators and believes that the rule contains adequate safeguards, whereby FSIS will be confident of the adequacy of each exporting countries' residue testing program and the resulting product. Even though the burden of establishing a residue testing program rests with each exporting country, FSIS Foreign Program officials have been working with meat inspection officials in exporting countries to determine if the nature of their residue program is appropriate. Additionally, the Agency is requiring that the testing methods used must be approved by the Administrator. The specific testing procedures are also currently being evaluated by the Agency.

In response to the concern that the testing procedures be conducted on a random basis, the Agency considers this to be a minimum requirement, and does not object to programs designed differently provided this minimum requirement is met. For example, the Agency is permitting programs in some

countries which require testing of every lot of animals from every farm at each plant.

Finally, in response to the suggestion that the exporting country provide specific documentation of the adequacy of testing procedures not yet approved for use in the United States, the Agency notes that it can and will request such documentation as needed. Documentation may be needed whenever an analytical method is not approved for official use in the United States or it is to be used for residues of a compound not approved for use in the United States. This is an inherent part of the review of exporting countries' residue programs; modification of the rule in that regard is not necessary.

2. *Cost of inspection.* Two of the comments discussed the cost to the United States of providing inspection, asserting that the cost ought to be borne by the exporting country.

The greatest cost burden associated with the new inspection requirements will be borne by the exporting country in implementing a residue testing program at the point of slaughter. The suggestion that each exporting country be charged for point-of-entry inspection services goes beyond the scope of this rulemaking.

3. *Economic advantage imported meat and meat food products maintain over state inspected meat and meat food products.* A comment was submitted by the State of Virginia's Department of Agriculture and Consumer Affairs which took issue with a statement in the proposal that the rule "[would] not have a significant adverse effect on competition, employment, investment, productivity, innovation or the ability of United States-based enterprises to compete with foreign-based enterprises in domestic or export markets." It was the commentator's contention that state inspected meat and meat food products suffer a competitive disadvantage in the market place. Even though the state meat inspection programs operate on a system that is at least "equal to" the federal program, the state inspected meat and meat food products are not permitted entry into interstate commerce. Whereas, imported products operating under the same "equal to" standard are allowed entry into interstate commerce.

The statement in the proposal and noted in the comment refers to a particular finding required by Executive Order 12291. The Executive Order requires that the Agency make a determination concerning the impact any proposed or final regulation would have on the national economy. USDA interprets a "significant effect" to be any action that would have an annual effect on the economy in excess of $100 million. Issuance of this regulation is not anticipated to cause a change in the amount of meat and meat food products being imported into the United States that would even approach a resulting $100 million effect on the economy.

Nevertheless, the Agency agrees that imported product has an economic advantage over state inspected product, for the stated reason. The Agency is supporting proposed legislation that would allow state inspected meat and meat food products operating under standards that are at least "equal to" those of the Federal meat inspection program entry into interstate commerce. However, the Agency lacks authority to make such a change absent legislative action by Congress. The House and Senate Agriculture committees are currently considering proposed legislation that would permit the interstate sale of state inspected product.

4. *Labeling as to country of origin.* Two commentators discussed a requirement that all imported meat and meat food products be labeled as to their country of origin. One of the commentators supported such a requirement while the other opposed it.

Imported meat and meat food products must meet the same standards as domestically produced product. Therefore, special labeling as to the place of origin is not justified under the provisions of existing law. Any special labeling would be very costly to U.S. producers who combine domestic and imported product into a single finished product. These producers would be required to keep records that would detail combined product mixtures for all finished lots. It would also require that importers maintain various stockpiles of labels for every country from which product was imported.

5. *Consumer education regarding imported products.* One of the comments suggested that the Agency implement a consumer education program to stress the quality of imported meat and meat food products as a means of restoring any consumer confidence that may have been lost as a result of the Australian meat substitution incident.

The Agency agrees that it is important that consumers be aware that imported products meet all the standards set for domestic products. However, there does not appear to have been any loss in confidence in imported products due to the Australian meat substitution incident that would warrant the expenditures required for a consumer education program. Less costly and equally effective means of providing information on the inspection standards applied to imports can be used to the same end. The Agency's mandate under the legislation was to strengthen the foreign inspection program. Implementation of a consumer education program exceeds the scope of this rulemaking.

**Final Rule**

Therefore, the Agency is amending Part 327 of the Federal meat inspection regulations (9 CFR Part 327) as proposed. This regulation is intended to make clear that the inspection, sanitary, quality, species verification, and residue standards applied to meat and meat food products being offered for importation into the United States must be at least "equal to" such standards applied to domestic meat and meat food products. Part 327 is further amended so as to require foreign countries desiring to establish and/or maintain eligibility for importation of products into the United States to have and maintain a program to test for residues in the internal organs and fat of carcasses from which meat and meat food products intended to be offered for importation into the United States are produced. Such a program would be required to provide for the sampling of internal organs and/or fat at the point of slaughter on a random basis, and the testing of such internal organs and fat for the detection of residues likely to occur in meat and meat food product from the particular exporting country. Analysis would be performed on the internal organs and/or fat, as appropriate for the detection of the specific residue. In addition, testing would be required only for those substances known to be in use in the production of meat and meat food products in the particular exporting country or otherwise known to be present in the environment of such country. As part of its obligation to assure that imported products meet the same standards applied to such domestic products, FSIS may request testing for residues of additional specific substances. Current programs now include the random sampling for species verification and residue tolerance levels of the imported product at the point of entry. Authority to take samples for laboratory examinations from products offered for importation is provided in 9 CFR 327.10(a). FSIS is not proposing additional regulations under the Farm Bill (21 U.S.C. 620(f)) concerning the provisions of the Act that would: prohibit imported products not meeting U.S. standards entry into the United States; and impose mandatory random

inspection for species verification on products offered for importation, as any such additional regulations would be a duplication of existing provisions.

**List of Subjects in 9 CFR Part 327**

Imported products, Meat inspection.

## PART 327—[AMENDED]

Accordingly, FSIS is revising the Federal meat inspection regulations as follows:

1. The authority citation for Part 327 reads as follows:

**Authority:** 34 Stat. 1260, 79 Stat. 903, as amended, 81 Stat. 584, 84 Stat. 91, 438; 21 U.S.C. 71 *et seq.*, 601 *et seq.*, 33 U.S.C. 1254.

2. Section 327.2(a)(2)(i) is amended by redesignating the present paragraph (*f*) as paragraph (*g*) and by adding a new paragraph (*f*) to read as follows:

**§ 327.2 Eligibility of foreign countries for importation of products into the United States.**

(a) (1) * * *

(2) * * *

(i) * * *

(*f*) The inspection, sanitation, quality, species verification, and residue standards applied to products produced in the United States.

* * * * *

3. Section 327.2(a)(2)(iv) is amended, for the sake of clarity, by designating the present requirements contained in this paragraph as paragraphs (a)(2)(iv) (*a*) and (*b*), and adding a new paragraph (*c*), to read as follows:

(a) * * *

(2) * * *

(iv) The foreign inspection system must maintain a program to assure that the requirements referred to in this section, at least "equal to" those of the Federal system of meat inspection in the United States, are being met. The program as implemented must provide for the following:

(*a*) Periodic supervisory visits by a representative of the foreign inspection system not less frequent than one such visit per month to each establishment certified in accordance with paragraph (a)(3) of this section to assure that requirements referred to in (*a*) through (*h*) of paragraph (a)(2)(ii) of this section are being met: *Provided,* That such visits are not required with respect to any establishment during a period when the establishment is not operating or is not engaged in producing products for exportation to the United States;

(*b*) Written reports prepared by the representative of the foreign inspection system who has conducted a supervisory visit, documenting his or her findings with respect to the requirements referred to in (*a*) through (*h*) of paragraph (a)(2)(ii) of this section, copies of which shall be made available to the representative of the Department at the time of that representative's review upon request by that representative to a responsible foreign meat inspection official: *Provided,* That such reports are not required with respect to any establishment during a period when the establishment is not operating or is not engaged in producing products for exportation to the United States; and

(*c*) Random sampling of internal organs and fat of carcasses at the point of slaughter and the testing of such organs and fat, for such residues having been identified by the exporting country's meat inspection authorities or by this Agency as potential contaminants, in accordance with sampling and analytical techniques approved by the Administrator: *Provided,* That such testing is required only on samples taken from carcasses from which meat or meat food products intended for importation into the United States are produced.

* * * * *

Done at Washington, D.C., on January 31, 1983.

**Donald L. Houston,**

*Administrator, Food Safety and Inspection Service.*

[FR Doc. 83-3696 Filed 2-9-83; 8:45 am]

BILLING CODE 3410-DM-M

---

## FEDERAL RESERVE SYSTEM

## 12 CFR Parts 207, 220, 221, and 224

## Securities Credit Transactions; Regulations G, T, U and X

**AGENCY:** Board of Governors of the Federal Reserve System.

**ACTION:** Final rule.

**SUMMARY:** The List of OTC Margin Stocks is comprised of stocks traded over-the-counter (OTC) that have been determined by the Board of Governors of the Federal Reserve System to be subject to margin requirements under certain Federal Reserve regulations. The List is published from time to time by the Board as a guide for lenders subject to the regulations and the general public. This document sets forth additions to or deletions from the previously published List effective July 26, 1982, and the First Supplement to that List, effective October 18, 1982, and will serve to give notice to the public about the changed status of certain stocks.

**EFFECTIVE DATE:** February 22, 1983.

**FOR FURTHER INFORMATION CONTACT:** Jamie Lenoci, Financial Analyst, Division of Banking Supervision and Regulation, Board of Governors of the Federal Reserve System, Washington, D.C. 20551, 202-452-2781.

**SUPPLEMENTARY INFORMATION:** Set forth below are stocks representing additions to or deletions from the Board's List of OTC Margin Stocks on file at the Office of the Federal Register as of July 26, 1982. The complete List of OTC Margin Stocks is comprised of the July 26, 1982 List of OCT Margin Stocks (See 47 FR 30719, July 15, 1982), the October 18, 1982 Supplement (See 47 FR 44241, October 7, 1982), and this February 22, 1983 Supplement. The List, as amended, includes those stocks that the Board of Governors has found meet the criteria specified by the Board and thus have the degree of national investor interest, the depth and breadth of market, and the availability of information respecting the stock and its issuer to warrant incorporating such stocks on the List of OTC Margin Stocks. Copies of the current List and the Supplements thereto may be obtained from any Federal Reserve Bank, and are on file at the Office of the Federal Register.

The requirements of 5 U.S.C. 553 with respect to notice and public participation were not followed in connection with the issuance of this amendment due to the objective character of the criteria for inclusion on the List specified in 12 CFR §§ 207.5(d) and (e), 220.8(h) and (i), and 221.4(d) and (e). No additional useful information would be gained by public participation. The full requirements of 5 U.S.C. 553 with respect to deferred effective date have not been followed in connection with the issuance of this amendment because the Board finds that it is in the public interest to facilitate investment and credit decisions based in whole or in part upon the composition of this List as soon as possible. The Board has responded to a request by the public and allowed a two-week delay before the List is effective.

**List of Subjects**

*12 CFR Parts 207 and 221*

Banks, banking, Credit, Federal Reserve System, Margin, Margin requirements, Reporting requirements, Securities.

*12 CFR Part 220*

Banks, banking, Brokers, Credit, Federal Reserve System, Margin, Margin requirements, Investments, Reporting requirements, Securities.

*12 CFR Part 224*

Banks, banking, Borrowers, Credit, Federal Reserve System, Margin, Margin requirements, Reporting requirements, Securities.

Accordingly, pursuant to the authority of sections 7 and 23 of the Securities Exchange Act of 1934 (15 U.S.C. 78g and 78w) and in accordance with § 207.2(f)(2) of Regulation G, § 220.2(e)(2) of Regulation T, and § 221.3(d)(2) of Regulation U, there is set forth below the Supplement of additions to and deletions from the Board's List:

**Board of Governors of the Federal Reserve System Second Supplement to July 26, 1982, List of OTC Margin Stocks,[1] February 22, 1983**

*Additions to the List*

AGS Computers, Inc., $.10 par common
Algorex Corporation, $.01 par common
Altair Corporation (Illinois), $.25 par common
American Aggregates Corporation, No par common
American Federal Savings and Loan Association of Colorado, $.01 par common
American Medical Services, Inc., $.10 par common
American National Holding Company, $5.00 par common
Arnold Industries, Inc., $1.00 par common
BPI Systems, Inc., $.01 par common
Biosearch Medical Products Inc., No par common
CPT Corporation, 10% convertible subordinated debentures
Capitol Bancorporation, $1.25 par common
Castle Entertainment, Inc., No par common
Citizens Growth Properties, $1.00 par shares of beneficial interest
Commercial Decal, Inc., $.20 par common
Computer Input Services, Inc., $.10 par common
Convergent Technologies, Inc., No par common
Crime Control, Inc., No par common
Data Switch Corporation, $.01 par common
Diagnostic Products Corporation, No par common
Elron Electronic Industries Ltd., Ordinary shares, IS 3 par value
Energy Reserve, Inc., No par common
Fidelity of Oklahoma, Inc., $5.00 par common
First Bancorporation of Ohio, $10.00 par common
First Capital Financial Corporation, $.01 par common
First National Corporation (Wisconsin), $5.00 par common
Flower Time, Inc., $.10 par common
General Magnaplate Corp., No par common
Godfather's Pizza, Inc., $.01 par common
Home Health Care of America, Inc., No par common
Idle Wild Foods, Inc., $1.00 par common
Independence Holding Company, $1.00 par common
Independent Bankshares, Inc., $1.25 par common
Indian Head Banks Inc., $5.00 par common
Intermetrics, Inc., $.01 par common
KV Pharmaceutical Company, $.50 par common
Kasler Corporation, No par common
Kimbark Oil & Gas Company, $.10 par common
Laidlaw Industries, Inc., $1.00 par common
Makita Electric Works, Ltd., Common stock, par value ¥ 50 per share
Mayfair Super Markets, Inc., $1.00 par common
Merchants Bancorp, Inc., $3.00 par common
Molecular Genetics Inc., $.01 par common
Muse Air Corporation, $.10 par common
National Bancorp of Alaska, Inc., $10.00 par common
Naugles, Inc., No par common
Nuclear Support Services, Inc., $.0025 par common
Old Stone Corporation, Series C, convertible preferred
Patriot Bancorporation, $3.33⅓ par common
People Express Airlines, Inc., $.01 par common
Pizza Ventures, Inc., No par common
Plaza Commerce Bancorp, No par common
Rexon Business Machines Corporation, No par common
Savings Bank of Puget Sound, $5.00 par common
Sensormatic Electronics Corporation, 10% convertible subordinated debentures
Spex Industries, Inc., $.10 par common
Syntrex Incorporated, $.10 par common
TCA Cable TV, Inc., $.10 par common
Textone, Inc., $.20 par common
United Bankers, Inc., No par common
Unitog Company, $2.00 par common
Victory Markets Inc., $.50 par common
Visual Sciences, Inc., $.01 par common
W. Bell & Co., Inc., $.10 par common
Wespac Investors Trust, $1.00 par shares of beneficial interest
Westbridge Capital Corp., $.10 par common
Zenith Laboratories, Inc., $.09 par common

*Deletions From the List*

Advest Group, Inc., the, $1.00 par common
Altair Corporation (Puerto Rico),[2] $1.00 par common
American Welding & Manufacturing Company, the, No par common
Ancorp Bancshares, Inc., $3.50. par common
Apeco Corporation,[2] $.50 par common
Automated Marketing Systems, Inc.,[2] $.50 par common
Barton Brands, Ltd.,[2] No par units of limited interest
Beefsteak Charlie's, Inc., $.10 par common
Cado Systems Corporation, $.10 par common
Castle Industries, Inc., $.10 par common
Central Louisiana Electric Company, Inc., $4.00 par common
Chem-Nuclear Systems, Inc., $.05 par common
Computer Data Systems, Inc., $.10 par common
Connecticut National Bank, $5.00 par common
Countrywide Credit Industries, Inc., $.05 par common
Crowley Foods Inc., $5.00 par common
Eaton Vance Corporation, Non-voting, $.50 par common
Equitable Savings & Loan Association, $2.00 par common
Exchange Bancorporation, Inc., $2.50 par common
Federated Investors, Inc., Class B, $.05 par common
First Executive Corporation,[2] 10% convertible subordinated debentures
Flight Transportation Corporation,[2] $.01 par common
Government Services Savings & Loan, Inc., $1.00 par capital
HCA, Inc., $1.00 par common
Hazleton Laboratories Corporation, $.10 par common
Home Depot, the $.05 par common
Interscience Systems, Inc.,[2] $.10 par common
Koger Company, the, $.10 par common
MFY Industries, Inc.,[2] $.25 par common
Midwestern Resources, Inc.,[2] $.001 par common
Mountain Banks, Ltd.,[2] $5.00 par common
National Savings Corporation, $1.00 par common
Oklahoma Energies Corporation,[2] $.001 par common
Pinkerton's Inc., Class B, non-voting, no par common
Pittsburgh National Corporation, $5.00 par common
Putnam Duofund, Inc., $1.00 per capital shares,[2] $1.00 par income shares[2]
Rai Research Corporation, $.01 par common
Radiofone Corporation, $.10 par common
Rehab, C. P. Corp.,[2] Warrants (expire 8/14/85)
Rollings Burdick Hunter Company, $.50 par common
Satellite Television & Associated Resources, Inc.,[2] $.01 par common
Saxon Oil Company,[2] $.10 par common
Sigmor Corporation,[2] Class A, $1.00 par common
Southwest Factories, Inc., $.40 par common
State National Bancorp, Inc., $1.00 par common
Sun Banks of Florida, Inc.,[2] $4.375 cumulative convertible preferred
United Kentucky, Inc., $10.00 par common

NAME CHANGES

| From— | To— |
|---|---|
| Alabama-Tennessee Natural Gas Company, $1.00 par common. | Alatenn Resources, Inc., $1.00 par common. |
| Arizona Bank, the, $2.50 par common. | Arizona Bancwest Corporation, $2.50 par common. |
| Caci, Inc., $.10 par common.... | Caci, Inc., Paired units. |
| First American Bank of Palm Beach County, Class A, $1.00 par common. | First American Bank and Trust of Palm Beach County, Class A, $1.00 par common. |
| First National Bancorporation, Inc., the, $10.00 par common. | Intrawest Financial Corporation, $10.00 par common. |
| Franklin State Bank, $3.50 par common. | Franklin Bancorp, $3.50 par common. |
| Hudson United Bank (Union City, N.J.), $8.00 par capital. | Hubco, Inc., $8.00 par capital. |
| Liberty National Bancorp, Inc., $8.33⅓ par common. | Liberty United Bancorp, Inc., $8.33⅓ par common. |
| M.D.C. Corporation, $.01 par common. | Bouton Corporation, $.01 par common. |
| North-West Telephone Company, $5.00 par common. | North-West Telecommunications, Inc., $5.00 par common. |

[1] The complete List of OTC Margin Stocks is comprised of the July 26, 1982 List of OTC Margin Stocks, the October 18, 1982 Supplement and this Second Supplement.

[2] Removed for failing continued listing requirement.

NAME CHANGES—Continued

| From— | To— |
|---|---|
| Pacific Coast Holdings, Inc., No par common. | Bell National Corporation, No par common. |
| Provident National Corporation, $1.00 par common. | PNC Financial Corporation, $1.00 par common. |
| Telecom Equipment Corporation, $.01 par common. | Telecom Plus International, Inc., $.01 par common. |
| Tenneco Offshore Company, Inc., $1.00 par common. | Tel Offshore Trust, Units of beneficial interest. |
| Transworld Bank, $2.00 par common. | Transworld Bancorp, $2.00 par common. |
| Wiley, John & Sons, Inc., $1.00 par common. | Wiley, John & Sons, Inc., Class A, $1.00 par common, Class B, $1.00 par common. |

By order of the Board of Governors of the Federal Reserve System acting by its Director of the Division of Banking Supervision and Regulation pursuant to delegated authority (12 CFR 265.2(c)(18)), February 2, 1983.

**William W. Wiles,**

*Secretary of the Board.*

[FR Doc. 83-3564 Filed 2-7-83; 11:04 am]

BILLING CODE 6210-01-M

## DEPARTMENT OF TRANSPORTATION

### Federal Aviation Administration

### 14 CFR Part 39

**[Docket No. 82-ASW-58; Amdt. 39-4562]**

### Airworthiness Directives; Bell Model 206L and 206L-1 Helicopters

**AGENCY:** Federal Aviation Administration (FAA), DOT.

**ACTION:** Final rule.

**SUMMARY:** This amendment adopts a new airworthiness directive (AD) which requires inspection of the float inflation valve assembly, on all Bell 206L and 206L-1 series helicopters equipped with an emergency flotation system, to determine if the piston pin is installed correctly. The AD is needed to prevent failure of the emergency flotation system (i.e., failure of the float bags to inflate). Failure of the bags would result in loss of the helicopter in the event of ditching.

**DATES:**

Effective Date: March 14, 1983.

Within the next 150 hours' time in service but not later than May 15, 1983.

**ADDRESSES:** The applicable service bulletins may be obtained from Bell Helicopter Textron, P.O. Box 482, Fort Worth, Texas 76101. Copies of the service bulletin are contained in the Rules Docket, Room 916, 800 Independence Avenue, SW., Washington, D.C. 20591 and at the Office of the Regional Counsel, Southwest Region, Federal Aviation Administration, 4400 Blue Mound Road, Fort Worth, Texas 76106.

**FOR FURTHER INFORMATION CONTACT:** J. R. Bannister, Helicopter Certification Branch, ASW-170, Aircraft Certification Division, Southwest Region, Federal Aviation Administration, P.O. Box 1689, Fort Worth, Texas 76101, telephone number (817) 624-4911, extension 521.

**SUPPLEMENTARY INFORMATION:** In a recent report of a flight over water, a Bell Model 206L-1 helicopter developed loss of engine power. The pilot autorotated toward the water, actuating the emergency flotation equipment as the helicopter approached the water. The emergency flotation pneumatic system valve failed to actuate and allow inflation of the float bags. On landing in the water, the helicopter rotated to an inverted position, floating partly submerged, allowing the nitrogen cylinder to be salvaged and returned to Bell Helicopter Textron, Inc., for investigation.

Examination of the valve assembly revealed that the squib charge had fired. Further investigation revealed that the shear head release pin had been incorrectly installed and was wedged in the machined groove of the shear head. The binding of the piston pin in the machined groove prevented release of the shear head and thus prevented release of the nitrogen gas to inflate the float bags. Bell Helicopter Textron, Inc., Alert Service Bulletin No. 206L-81-21 was issued to accomplish the inspection of the shear pin for correct installation in relation to the shear head.

Interested parties were invited to comment on this rulemaking proceeding in an NPRM published Sept. 30, 1982 (47 FR 43070). No comments on the proposal were received.

Since this condition is likely to exist or develop on other helicopters of the same type design, an airworthiness directive is being issued which requires an inspection for all Bell Model 206L and 206L-1 series helicopters equipped with emergency flotation equipment kits P/N 206-706-067-1, -3, -5, -101 and 206-706-210-101 and -103. Approximately 270 helicopters may have the shear head release piston pin installed incorrectly. The cost impact for the inspection is approximately $185.50 for each helicopter and $50,085 for the fleet.

### List of Subjects in 14 CFR Part 39

Air transportation, Aircraft, Aviation safety, Safety.

### Adoption of the Amendment

Accordingly, pursuant to the authority delegated to me by the Administrator, § 39.13 of Part 39 of the Federal Aviation Regulations (14 CFR 39.13) is amended by adding the following new airworthiness directive:

**Bell Helicopter Textron, Inc.:** Applies to all Model 206L and 206L-1 helicopters certificated in all categories that are equipped with emergency flotation equipment kits P/N 206-706-067-1, -5, -101 and 206-706-210-101, and -103.

Compliance is required within 150 hours' time in service but not later than 60 days after the effective date of this AD unless already accomplished in accordance with Service Bulletin 206L-81-21 or modified in accordance with Technical Bulletin 206L-82-84.

To determine whether the shear heads in the float inflation valve assembly have been damaged by incorrect installation, accomplish the following:

a. Disconnect the battery. NOTE: DO NOT DISCONNECT ELECTRICAL CONNECTOR TO THE SQUIB VALVE ON THE INFLATION VALVE AT THE CYLINDER ASSEMBLY.

b. Remove the nitrogen gas from inflation cylinder, carefully bleeding off the gas through the Schrader inlet valve.

*CAUTION*

DO NOT ATTEMPT TO REMOVE THE SHEAR HEAD PISTON PIN PRIOR TO REMOVAL OF THE NITROGEN GAS FROM THE CYLINDER.

c. Carefully remove the shear head release piston pin. Visually inspect the pin, as removed, to determine if the position of the flat machined side of the piston pin faces the inlet end of the shear head machined groove (Ref. Figure 1, Bell Helicopter Textron Service Bulletin 206L-81-21, dated May 7, 1981).

d. If the shear head release piston pin has been installed by rotating the pin 90 to 180 degrees, placing the round side of the pin against the inlet side of the shear head inlet groove, the pin has been incorrectly installed.

e. If the shear head realease piston pin is found installed incorrectly, remove the shear head from the valve body and discard. Install a new shear head and "O" rings. On installation, thread shear head into the valve body and torque to 20 foot-pounds, *prior to installing the shear head release piston pin.* (Reinstall piston as described in paragraph f.

f. If the shear head release piston pin is found correctly installed, place "O" ring in groove of piston pin and install piston pin part way into body with flat side on end of piston pin facing inlet port. Rotate piston pin 90 degrees and lightly push piston pin down into valve body until it bottoms out. While pushing on piston pin, rotate piston pin 90 degrees in the opposite direction. Piston pin should drop deeper into body. Flat side of piston pin must engage groove in shear head, with flat side facing inlet port.

g. Refill cylinder with nitrogen. Check for leaks. Connect battery, and refer to appropriate service instruction.

*NOTE*

X-ray Inspection (Alternate Method).

Where X-ray equipment is available, inspection of the valve assembly may be accomplished by use of X-ray pictures.

Reference Figure 2, Bell Helicopter Textron Service Bulletin 206L-81-21 dated May 7, 1981, or FAA approved equivalent for examples of correct and incorrect piston pin installation in the valve assembly. This eliminates the need to bleed off the nitrogen and to disassemble the valve assembly.

*CAUTION*

DISCONNECT AND REMOVE THE SQUIB FROM THE VALVE ASSEMBLY PRIOR TO USE OF X-RAY.

h. Equivalent means of compliance with the AD may be approved by the Manager, Aircraft Certification Division, Southwest Region, Fort Worth, Texas.

This amendment becomes effective March 14, 1983.

(Secs. 313(a), 601, and 603, Federal Aviation Act of 1958, as amended, (49 U.S.C. 1354(a), 1421, and 1423); Sec. 6(c), Department of Transportation Act (49 U.S.C. 1655(c)); 14 CFR 11.89)

**Note.**—The FAA has determined that this document involves a regulation which is not major under Executive Order 12291 or significant under the Department of Transportation Regulatory Policies and Procedures (44 FR 11034; February 26, 1979). It is certified under the criteria of the Regulatory Flexibility Act that this rule will not have a significant economic impact on a substantial number of small entities under the criteria of the Regulatory Flexibility Act since it involves only 270 helicopters at a cost of $185.50 per helicopter. A copy of the final regulatory evaluation prepared for this action has been placed in the Regulatory docket. A copy of it may be obtained by contacting the person identified under the caption "**FOR FURTHER INFORMATION CONTACT.**"

This rule is a final order of the Administrator. Under Section 1006(a) of the Federal Aviation Act of 1958, as amended (49 U.S.C. 1486(a)), it is subject to review by the various courts of appeals of the United States, or the United States Court of Appeals for the District of Columbia.

Issued in Fort Worth, Texas, January 27, 1983.

F. E. Whitfield,

*Acting Director, Southwest Region.*

[FR Doc. 83-3614 Filed 2-9-83; 8:45 am]

BILLING CODE 4910-13-M

---

## 14 CFR Part 39

**[Docket No. 82-ASW-54; Amdt. 39-4556]**

## Airworthiness Directives; Garlick Helicopters, Hawkins & Powers Aviation, Inc., Wilco Aviation (Bell) UH-1 Series Helicopters

**AGENCY:** Federal Aviation Administration (FAA), DOT.

**ACTION:** Final rule.

**SUMMARY:** This amendment adopts a new airworthiness directive (AD) which requires repetitive inspections and repair or replacement, as necessary, of the tail boom skin and fin spar caps on UH-1 series helicopters. The AD is needed to detect tail boom skin and fin spar cracks which could result in tail boom failure and cause loss of the helicopter.

**DATES:** Effective March 14, 1983. Compliance required within the next 30 hours' time in service after the effective date of this AD unless already accomplished.

**ADDRESSES:** The applicable service bulletins for UH-1 helicopters certificated under the provisions of the Type Certificate H1RM may be obtained from Hawkins and Powers Aviation, Inc., P.O. Box 391, Greybull, Wyoming 82426.

A copy of each of the service bulletins is contained in the Rules Docket, Office of the Regional Counsel, Southwest Region, 4400 Blue Mound Road, Fort Worth, Texas 76106.

**FOR FURTHER INFORMATION CONTACT:** R. T. Weaver, Helicopter Policy and Procedures Staff, Aircraft Certification Division, Federal Aviation Administration, P.O. Box 1689, Fort Worth, Texas 76101. Telephone: (817) 624-4911, extension 504.

**SUPPLEMENTARY INFORMATION:** The FAA has determined that tail boom skin cracks occurred in a model UH-1B which crashed. A metallurgical examination revealed the cracks to be due to structural fatigue. Since this condition is likely to exist or develop on other helicopters of the same type design, an airworthiness directive is being issued which requires manual and radiographic inspections for fretting and cracking, and repair or replacement, as necessary, of the tail boom skin and the fin spar cap on Bell Model UH-1 series helicopters.

The NPRM was published in the **Federal Register** on September 13, 1982 (47 FR 40182). Interested persons have been afforded an opportunity to participate in the making of the amendment. One commenter objected to including the UH-1F in the proposed airworthiness directive since it is similar to the Model 204B which has not experienced severe cracking comparable to that of the UH-1B which crashed. Since Model UH-1F helicopters can enter civilian service only as surplus military aircraft through the restricted category type certification process, the initial and repetitive inspections are needed to determine if military related combat damage exists and to assure continued inspections are accomplished. Since the Model UH-1F is closer in configuration to the civil model 204B than to the UH-1B, a paragraph has been added to the amendment to allow adjustment of the repetitive inspection intervals if warranted by substantiating data.

Approximately 34 aircraft could be affected by the requirements of this AD for an estimated impact of $28,560 or $840 per aircraft.

### List of Subjects in 14 CFR Part 39

Air transportation, Aircraft, Aviation safety, Safety.

### Adoption of the Amendment

Accordingly, pursuant to the authority delegated to me by the Administrator, § 39.13 of Part 39 of the Federal Aviation Regulations (14 CFR 39.13) is amended, by adding the following new Airworthiness Directive:

**Garlick Helicopters, Hawkins & Powers Aviation, Inc., Wilco Aviation (Bell):** Applies to Model UH-1 series helicopters certificated in restricted category.

Compliance is required as indicated, unless already accomplished.

To detect cracks and to prevent possible failure of the tail boom and fin, accomplish the following:

Within the next 30 hours' time in service after the effective date of this AD:

a. Conduct the following inspections:

(1) Visually inspect the tail boom skin joint at tail boom Station 194 for fretting or cracking (inspect 10 inches forward and 10 inches aft of Station 194).

(2) Visually inspect the vertical fin front spar cap at its intersection with the tail rotor gear box support fitting for cracks.

(3) The areas to be inspected are shown in Figure 1.

b. For aircraft found to have fretting or cracks by the inspections of paragraph a. above and for aircraft with more than 1,000 hours' time in service, conduct a radiographic inspection of the tail boom Station 194 splice joint in accordance with Advisory Circulars 43-3 (Chapter 2) and 43-13-1A (paragraph 298) to MIL-STD-453 requirements, or FAA approved equivalent.

c. After the initial inspections—

(1) Visually inspect the tail boom skin and fin spar cap area in accordance with paragraph a. above, at intervals not to exceed 100 hours' time in service from the last radiographic inspection.

(2) Radiographically inspect the tail boom skin in accordance with paragraph b. above at intervals not to exceed 500 hours' time in service from the last radiographic inspection.

d. Replace cracked skin panels with serviceable panels.

e. Replace cracked fin spar caps with serviceable parts.

f. Any equivalent method of compliance with this AD must be approved by the Manager, Aircraft Certification Division, Southwest Region, Federal Aviation Administration.

g. Upon request of the operator, an FAA maintenance inspector, subject to prior approval of the Manager, Aircraft

Certification Division, FAA Southwest Region, may adjust the repetitive inspection intervals specified in this AD to permit compliance at an established inspection period of the operator if the request contains substantiating data to justify the increase for that operator.

h. In accordance with FAR 21.197, flight is permitted to a base where the inspections required by this AD may be accomplished.

This amendment becomes effective March 14, 1983.

(Secs. 313(a), 601, and 603, Federal Aviation Act of 1958, as amended (49 U.S.C. 1354(a), 1421, and 1423); Sec. 6(c), Department of Transportation Act (49 U.S.C. 1655(c)); 14 CFR 11.89)

**Note.**—The FAA has determined that this regulation is not considered to be major under Executive Order 12291 or significant under DOT Regulatory Policies and Procedures (44 FR 11034; February 26, 1979) and I certify that it will not have a significant economic impact on a substantial number of small entities under the criteria of the Regulatory Flexibility Act since it applies to approximately 34 helicopters for an estimated annual cost of $28,560. A final evaluation has been prepared for this regulation and has been placed in the docket. A copy of it may be obtained by contacting the person identified under the caption **"FOR FURTHER INFORMATION CONTACT."**

This rule is a final order of the Administrator. Under Section 1006(a) of the Federal Aviation Act of 1958, as amended (49 U.S.C. 1486(a)), it is subject to review by the various courts of appeals of the United States, or the United States Court of Appeals for the District of Columbia.

Issued in Fort Worth, Texas, on January 20, 1983.

**F. E. Whitfield,**

*Acting Director, Southwest Region.*

**BILLING CODE 4910-13-M**

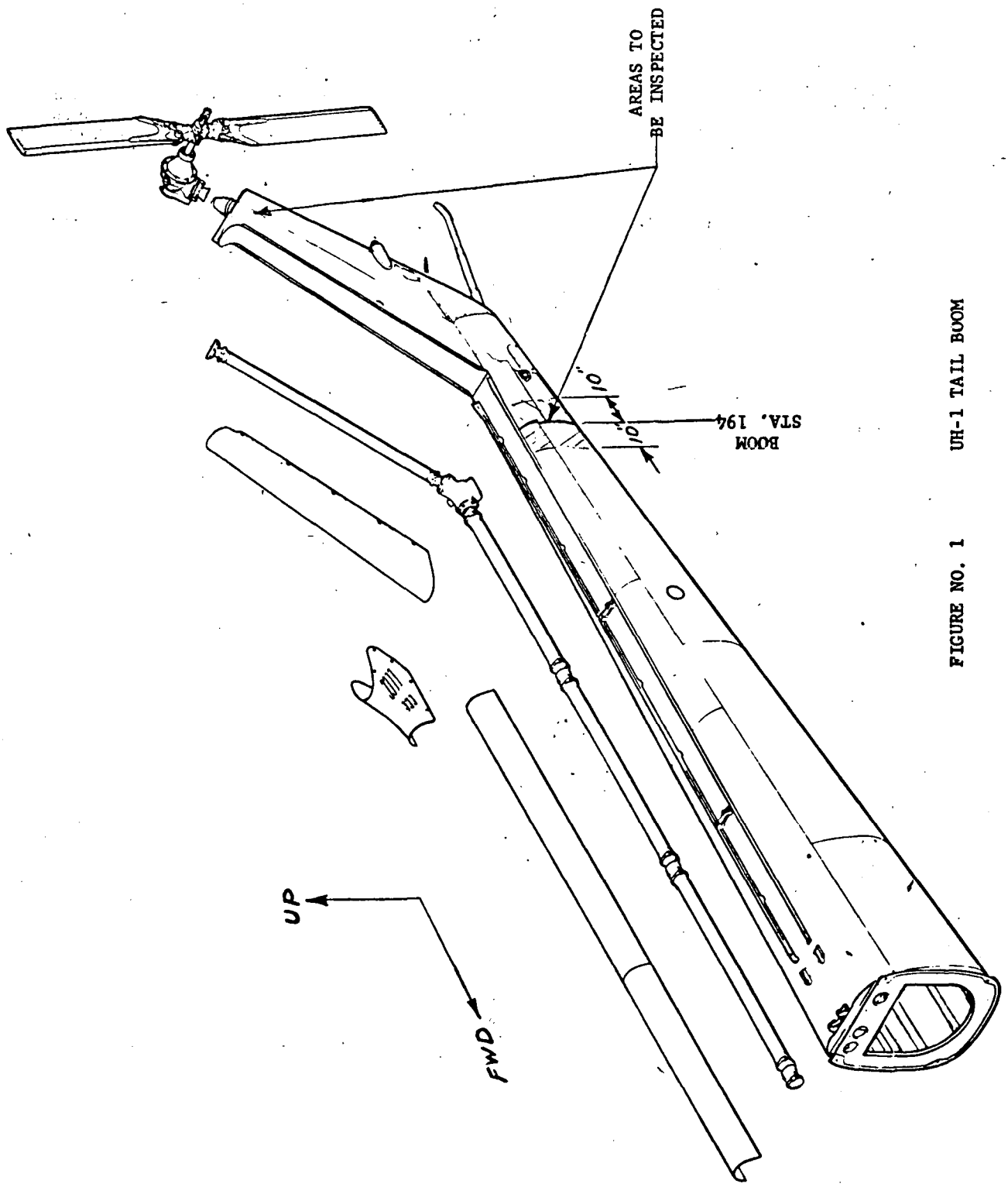


FIGURE NO. 1 UH-1 TAIL BOOM

[FR Doc. 83-3619 Filed 2-9-83; 8:45 am]
BILLING CODE 4910-13-C

## 14 CFR Part 71

**[Airspace Docket No. 83-ASO-1]**

## Alteration of Transition Area, Americus, Georgia

**AGENCY:** Federal Aviation Administration (FAA), DOT.

**ACTION:** Final rule; request for comments.

**SUMMARY:** This amendment alters the Americus, Georgia, Transition Area by revoking the extension that is no longer necessary because the instrument approach procedure for which the extension was adopted has been cancelled. This action will raise the base of controlled airspace in an area northeast of Souther Field from 700 to 1,200 feet above the surface.

**DATES:** Effective Date: 0901 G.m.t., April 14, 1983. Comments must be received on or before March 14, 1983.

**ADDRESSES:** Send comments on the rule in triplicate to: Federal Aviation Administration, ATTN: Manager, Airspace and Procedures Branch, ASO-530, Air Traffic Division, P.O. Box 20636, Atlanta, Georgia 30320.

The official docket may be examined in the Office of the Regional Counsel, Room 652, 3400 Norman Berry Drive, East Point, Georgia 30344, telephone: (404) 763-7646.

**FOR FURTHER INFORMATION CONTACT:** Donald Ross, Airspace and Procedures Branch, Air Traffic Division, Federal Aviation Administration, P.O. Box 20636, Atlanta, Georgia 30320; telephone: (404) 763-7646.

**SUPPLEMENTARY INFORMATION:**

### Request for Comments on the Rule

Although this action is in the form of a final rule, which involves raising the base of controlled airspace northeast of Souther Field from 700 to 1,200 feet above the surface and was not preceded by notice and public procedure, comments are invited on the rule. When the comment period ends, the FAA will use the comments submitted, together with other available information, to review the regulation. After the review, if the FAA finds that changes are appropriate, it will initiate rulemaking proceedings to amend the regulation. Comments that provide the factual basis supporting the views and suggestions presented are particularly helpful in evaluating the effects of the rule and determining whether additional rulemaking is needed. Comments are specifically invited on the overall regulatory, aeronautical, economic, environmental and energy aspects of the rule that might suggest the need to modify the rule.

### The Rule

The purpose of this amendment to § 71.181 of Part 71 of the Federal Aviation Regulations (14 CFR Part 71) is to alter the Americus, Georgia, Transition Area by revoking an extension which is no longer required. The Souther radio beacon, which was located on Souther Field, is being relocated to a new site northeast of the airport. The instrument approach procedure, which was predicated on the radio beacon and established the need for the extension, has been cancelled, thus negating the need for the extension. New instrument approach procedures, predicated on the relocated radio beacon, will not require arrival extensions. Section 71.181 of Part 71 of the Federal Aviation Regulations was republished in Advisory Circular AC 70-3A dated January 3, 1983. Under the circumstances presented, the FAA concludes that there is a need for a regulation to alter the Americus Transition Area by revoking an extension which is no longer required. Therefore, I find that notice of public procedure under 5 U.S.C. 553(b) is unnecessary. Effective on April 14, 1983.

### List of Subjects in 14 CFR Part 71

Aviation safety, Airspace, Transition area.

### Adoption of the Amendment

Accordingly, pursuant to the authority delegated to me, § 71.181 of Part 71 of the Federal Aviation Regulations (14 CFR Part 71) (as amended) is further amended, effective 0901 G.m.t., April 14, 1983, as follows:

**Americus, Souther Field, GA—Revised**

That airspace extending upward from 700 feet above the surface within a 6.5-mile radius of Souther Field (lat. 32°06'42" N., long. 84°11'19" W.).

(Secs. 307(a) and 313(a), Federal Aviation Act of 1958 (49 U.S.C. 1348(a) and 1354(a)); Sec. 6(c), Department of Transportation Act (49 U.S.C. 1655(c)); and 14 CFR 11.69)

**Note.**—The FAA has determined that this regulation only involves an established body of technical regulations for which frequent and routine amendments are necessary to keep them operationally current. It, therefore, (1) is not a "major rule" under Executive Order 12291; (2) is not a "significant rule" under DOT Regulatory Policies and Procedures (44 FR 11034; February 26, 1979); and (3) does not warrant preparation of a regulatory evaluation as the anticipated impact is so minimal. Since this is a routine matter that will only affect air traffic procedures and air navigation, it is certified that this rule will not have a significant economic impact on a substantial number of small entities under the criteria of the Regulatory Flexibility Act.

Issued in East Point, Ga., on January 28, 1983.

**George R. LaCaille,**

*Acting Director, Southern Region.*

[FR Doc. 83-3616 Filed 2-9-83; 8:45 am]

BILLING CODE 4910-13-M

## 14 CFR Part 71

**[Airspace Docket No. 82-AGL-23]**

## Designation of VOR Federal Airway

**AGENCY:** Federal Aviation Administration (FAA), DOT.

**ACTION:** Final rule.

**SUMMARY:** This amendment designates new VOR Federal Airway V-503 between Rochester, MN, and Cedar Rapids, IA. The direct routing between these points reduces controller workload by providing an airway in an area where aircraft are normally vectored. Also, V-503 provides economic benefits to users in the form of fuel savings.

**EFFECTIVE DATE:** April 14, 1983.

**FOR FURTHER INFORMATION CONTACT:** Lewis W. Still, Airspace Regulations and Obstructions Branch (AAT-230), Airspace and Air Traffic Rules Division, Air Traffic Service, Federal Aviation Administration, 800 Independence Avenue, SW., Washington, D.C. 20591; telephone: (202) 426-8783.

**SUPPLEMENTARY INFORMATION:**

### History

On December 30, 1982 (47 FR 58280), the FAA proposed to amend Part 71 of the Federal Aviation Regulations (14 CFR Part 71) to designate new VOR Federal Airway V-503 between Rochester, MN, and Cedar Rapids, IA, via a direct route. An increasing number of pilots are requesting direct routing between these points. The FAA has determined that users of the air traffic control system would be better served by designating an airway in an area where frequent request by pilots for direct routing between these points have been noted. This action aids flight planning, increases safety, and reduces controller workload. Interested parties were invited to participate in this rulemaking proceeding by submitting written comments on the proposal to the FAA. No comments objecting to the proposal were received. Except for editorial changes, this amendment is the same as that proposed in the notice.

Section 71.123 of Part 71 of the Federal Aviation Regulations was republished in Advisory Circular AC 70-3A dated January 3, 1983.

**The Rule**

This amendment to Part 71 of the Federal Aviation Regulations designates new VOR Federal Airway V-503 between Rochester, MN, and Cedar Rapids, IA. The direct routing between these points reduces controller workload by providing an airway in an area where aircraft are normally vectored.

**List of Subjects in 14 CFR Part 71**

VOR Federal airways, Aviation safety.

**Adoption of the Amendment**

Accordingly, pursuant to the authority delegated to me, § 71.123 of Part 71 of the Federal Aviation Regulations (14 CFR Part 71) is amended, effective 0901 G.M.T., April 14, 1983, as follows:

**V-503 [New]**

V-503 From Rochester, MN, to Cedar Rapids, IA.

(Secs. 307(a) and 313(a), Federal Aviation Act of 1958 (49 U.S.C. 1348(a) and 1354(a)); Sec. 6(c), Department of Transportation Act (49 U.S.C. 1655(c)); and 14 CFR 11.69)

**Note.**—The FAA has determined that this regulation only involves an established body of technical regulations for which frequent and routine amendments are necessary to keep them operationally current. It, therefore—(1) is not a "major rule" under Executive Order 12291; (2) is not a "significant rule" under DOT Regulatory Policies and Procedures (44 FR 11034; February 26, 1979); and (3) does not warrant preparation of a regulatory evaluation as the anticipated impact is so minimal. Since this is a routine matter that will only affect air traffic procedures and air navigation, it is certified that this rule will not have a significant economic impact on a substantial number of small entities under the criteria of the Regulatory Flexibility Act.

Issued in Washington, D.C., on February 3, 1983.

**John W. Baier,**

*Acting Manager, Airspace and Air Traffic Rules Division.*

[FR Doc. 83-3618 Filed 2-9-83; 8:45 am]

BILLING CODE 4910-13-M

---

## 14 CFR Part 71

**[Airspace Docket No. 82-AWA-5]**

## Designation of Federal Airways, Area Low Routes, Controlled Airspace, and Reporting Points; Cleveland, Ohio

**AGENCY:** Federal Aviation Administration (FAA), DOT.

**ACTION:** Final rule.

**SUMMARY:** This amendment alters the descriptions of several airways in the vicinity of Cleveland, OH, by deleting alternate airway segments and renumbering other airway segments. This action supports our agreement with the International Civil Aviation Organization (ICAO) to eliminate all alternate airway designations from the National Airspace System.

**EFFECTIVE DATE:** April 14, 1983.

**FOR FURTHER INFORMATION CONTACT:** Lewis W. Still, Airspace Regulations and Obstructions Branch (AAT-230), Airspace and Air Traffic Rules Division, Air Traffic Service, Federal Aviation Administration, 800 Independence Avenue, SW., Washington, D.C. 20591; telephone: (202) 426-8783.

**SUPPLEMENTARY INFORMATION:**

**History**

On December 6, 1982 (47 FR 54831), the FAA proposed to amend Part 71 of the Federal Aviation Regulations (14 CFR Part 71) to amend § 71.123 of Part 71 of the Federal Aviation Regulations (14 CFR Part 71) to alter the descriptions of several VOR Federal Airways in the vicinity of Cleveland, OH, by deleting the alternate route segments. Those alternate routes required for air traffic control have been assigned new numbers. This action supports our agreement with ICAO to eliminate all alternate route designations from our National Airspace System. Interested parties were invited to participate in this rulemaking proceeding by submitting written comments on the proposal to the FAA. No comments objecting to the proposal were received. Except for editorial changes, this amendment is the same as that proposed in the notice. Section 71.123 of Part 71 of the Federal Aviation Regulations was republished in Advisory Circular AC 70-3A dated January 3, 1983.

**The Rule**

This amendment is Part 71 of the Federal Aviation Regulation alters the descriptions of several airways in the vicinity of Cleveland, OH, by deleting alternate airway segments and renumbering other airway segments. This action supports our agreement with ICAO to eliminate all alternate airway designations from the National Airspace System.

**List of Subjects in 14 CFR Part 71**

VOR Federal airways, Aviation safety

**Adoption of the Amendment**

Accordingly, pursuant to the authority delegated to me, § 71.123 of Part 71 of the Federal Aviation Regulations (14 CFR Part 71) is amended, effective 0901 G.m.t., April 14, 1983, as follows:

1. *V-26 [Amended]*

By deleting the words "Lansing, MI; Salem, MI; including a north alternate via INT Lansing 103° and Salem 308° radials;" and substituting the words "Lansing, MI; Salem, MI;"

2. *V-103 [Amended]*

By deleting the word "Salem." and substituting the words "Salem; INT Salem 308° and Lansing, MI, 103° radials; to Lansing."

3. *V-6 [Amended]*

By deleting the words "Waterville; DRYER, OH, including a S alternate via INT Waterville 108° and DRYER 252° radials; Youngstown, OH, including a north alternate via INT DRYER 081° and Youngstown 285° radials;" and substitute for them the words "Waterville; DRYER, OH; Youngstown, OH;"

4. *V-526 [New]*

By adding: V-526 From Northbrook, IL; INT Northbrook 095° and South Bend, IN, 310° radials; to South Bend. From Waterville, OH; INT Waterville 108° and DRYER, OH, 252° radials; DRYER; INT DRYER, 081° and Youngstown, OH, 285° radials; Youngstown to Clarion, PA.

5. *V-228 [Revised]*

V-228 is revised to read as follows:

"From Northbrook, IL; INT Northbrook, IL, 111° and South Bend, IN, 290° radials; to South Bend, IN.

6. *V-7 [Amended]*

By deleting the words ", including an east alternate via INT Chicago Heights 013° and Milwaukee, WI, 137° radials; to the INT Milwaukee, 137° and Chicago-O'Hare 019° radials"

7. *V-192 [Amended]*

By deleting the words "to Indianapolis." and substituting the words "; Indianapolis; Muncie, IN; to Dayton, OH."

8. *V-50 [Amended]*

By deleting the words "Dayton, OH, including a N alternate from Indianapolis to Dayton via Muncie, IN." and substitute the words "to Dayton, OH."

9. *V-47 [Amended]*

By deleting the words "Findlay, OH, including a W alternate via INT Rosewood 309° and Findlay, OH, 218° radials;" and substitute the words "Findlay, OH;"

10. *V-43 [Amended]*

By deleting the words "Youngstown, OH; including a west alternate from Tiverton via INT Tiverton 040° and Akron, OH, 233° radials; Akron to Youngstown; including an E alternate from Briggs via INT Briggs 057° and Youngstown 177° radials to Youngstown;" and substitute the words "Youngstown, OH;"

11. *V-523 [New]*

By adding: V-523 From Appleton, OH; Tiverton, OH; INT Tiverton 040° and Akron, OH, 233° radials; Akron; Youngstown, OH; to Erie, PA.

12. *V-443 [Amended]*

By deleting the words "Tiverton, OH; DRYER, OH, including an E alternate via INT Tiverton 028° and DRYER 138° radials;" and substitute the words "Tiverton, OH; DRYER, OH;"

13. *V-525 [New]*

By adding: V-525 From Appleton, OH; Tiverton, OH; INT Tiverton 028° and DRYER, OH, 138° radials; to DRYER.

14. *V-14 [Amended]*

By deleting the words ", Erie, PA, including a N alternate from DRYER to Erie via INT DRYER 049° and Jefferson 279° radials; Dunkirk, NY;" and substitute the words "; Erie, PA; Dunkirk, NY;"

15. *V-522 [New]*

By adding: V-522 From DRYER, OH; INT DRYER 049° and Erie, PA, 258° radials; Erie; to Dunkirk, NY.

(Secs. 307(a) and 313(a), Federal Aviation Act of 1958 (49 U.S.C. 1348(a) and 1354(a)); Sec. 6(c), Department of Transportation Act (49 U.S.C. 1655(c)); and 14 CFR 11.69)

Note.—The FAA has determined that this regulation only involves an established body of technical regulations for which frequent and routine amendments are necessary to keep them operationally current. It, therefore—(1) is not a "major rule" under Executive Order 12291; (2) is not a "significant rule" under DOT Regulatory Policies and Procedures (44 FR 11034; February 26, 1979); and (3) does not warrant preparation of a regulatory evaluation as the anticipated impact is so minimal. Since this is a routine matter that will only affect air traffic procedures and air navigation, it is certified that this rule will not have a significant economic impact on a substantial number of small entities under the criteria of the Regulatory Flexibility Act.

Issued in Washington, D.C., on February 3, 1983.

**John W. Baier,**

*Acting Manager, Airspace and Air Traffic Rules Division.*

[FR Doc. 83-3617 Filed 2-9-83; 8:45 am]

BILLING CODE 4910-13-M

---

## 14 CFR Part 91

**[Docket No. 22285; Amdt. No. 91-182]**

## Reduction in Required Advance Notice to Air Traffic Control for Nontransponder Operations

**AGENCY:** Federal Aviation Administration (FAA), DOT.

**ACTION:** Final rule.

**SUMMARY:** This amendment to the Federal Aviation Regulations reduces from four hours to one hour the required advance notice that a pilot must give to the appropriate Air Traffic Control (ATC) facility in order to fly a nontransponder-equipped aircraft in Terminal Control Areas (TCA's) and generally in controlled airspace above 12,500 feet MSL. The amendment reduces the advance notice burden on pilots operating aircraft without transponders and permits more efficient functioning of the ATC system.

**EFFECTIVE DATE:** April 11, 1983.

**FOR FURTHER INFORMATION CONTACT:** Gene Falsetti, Air Traffic Rules Branch, AAT-200, Federal Aviation Administration, 800 Independence Ave. SW., Washington, DC 20591; telephone (202) 426-3128.

**SUPPLEMENTARY INFORMATION:** This amendment is based on Notice of Proposed Rulemaking No. 81-13 published in the **Federal Register** on October 22, 1981 (46 FR 51866). All interested persons were given an opportunity to participate in making the amendment and due consideration was given to all matters presented. This amendment and the reasons for its adoption are the same as those stated in Notice No. 81-13.

### Background

Section 91-24, as adopted by Amendment 91-116 (36 FR 14676; June 4, 1973), requires the use of airborne radar beacon transponders in certain controlled airspace to enhance the radar image of the aircraft which is presented to the air traffic controller, provide radar target information, and enable the ATC system to handle an increased volume of air traffic safely. The rule also specifies the technical requirements the transponders must meet and authorizes ATC to permit certain deviations from the rule. In accordance with paragraph (3)(c) of § 91.24, requests to operate an aircraft in a TCA or in controlled airspace above 12,500 feet MSL without a transponder must be submitted to the ATC facility having jurisdiction over the airspace concerned at least four hours before the proposed operation.

Notice No. 81-13 proposed to reduce the required advance notice to ATC of a nontransponder operation from four hours to one hour. This proposal was based on a concensus within the FAA that ATC capabilities had improved because of improvements in ATC equipment, better communications, and improved ATC procedures, and that this would permit an increase in ATC service to the users of the system while reducing the advance notice burden on pilots. It was felt that with a shorter notice period, ATC could better discern the short term, near term weather and better assess the air traffic situation expected at the time of the proposed nontransponder operation. Weather, staffing, and related factors are more predictable one hour in advance of a flight than they are under the current four hours advance notice requirement. This increased predictability increases the efficiency and quality of the ATC service. At the same time, nontransponder operations, such as local, VFR training, and transient flights, could be conducted with a minimum of notice burden to the user of the ATC system. It would also benefit pilots in that proposed arrival and departure times could be estimated more accurately. To accomplish this change, Notice No. 81-13 proposed to amend § 91.24(c)(3) by substituting "one hour" advance notice for the present "four hours" notice requirement.

### Discussion of Comments

Public comments were received from the National Transportation Safety Board (NTSB), Air Transport Association of America (ATA), National Business Aircraft Association (NBAA), Air Line Pilots Association (ALPA), Aircraft Owners and Pilots Association (AOPA), Appalachian Helicopter Pilots Association (AHPA), the State of Oregon Aeronautics Division, and three private citizens. All supported the amendment.

In addition, AOPA and one of the individual commenters proposed an immediate ATC deviation authority. The FAA does not agree. Immediate deviation authority would create the potential for serious radio frequency congestion in higher density traffic areas where transponders are now required for purposes of effective, continuous identification and separation of traffic. In these environments, the no-notice appearance of aircraft without transponders could result in the consumption and competition for valuable time on control frequencies. In each case, time would be spent on initial unanticipated callups to provide aircraft identification, position, altitude, direction, heading, and other information considered pertinent to ATC. If, on the other hand, some advance notice were given, ATC facility management would have enough time to determine likely traffic loads and ATC's capability to absorb nontransponder traffic. Another disadvantage to immediate ATC deviation authority is that it is likely to act as a disincentive for many pilots/operators to purchase and maintain a transponder. This inducement would be contrary to the public interest since an operable transponder is necessary for the efficient movement of air traffic in airspace areas where it is required. The NTSB shares this concern, stating it opposed any reduction below the one

hour notice. Going a step further, ATA urged the FFA to require all aircraft in the ATC system to have transponders. The ATA suggestion is beyond the scope of the notice in this rulemaking action.

In another comment, AHPA recommended that § 91.24(b) be changed so that helicopter operations in a TCA below 700 feet would be exempt from the transponder requirement without limitation. At present helicopters may be flown in a TCA below 1,000 feet as long as the operator consummates a letter of agreement with the controlling ATC facility. The AHPA comment, submitted in substance during a previous regulatory review on helicopters, is beyond the scope of this notice.

**Impact Assessment**

This regulatory action is relieving in nature. No formal cost-benefit analysis was completed with respect to the change. However, through a preliminary assessment of costs and economic impact, the FAA has determined that there are no costs associated with this change, and that reducing the advance notice that operators of aircraft without transponders are required to give to ATC in order to operate in certain controlled airspace will result in a minimal/positive economic impact.

**List of Subjects in 14 CFR Part 91**

Aviation safety, Safety, Aircraft, Pilots.

**Adoption of the Amendment**

## PART 91—GENERAL OPERATING AND FLIGHT RULES

Accordingly, § 91.24(c)(3) of Part 91 of the Federal Aviation Regulations (14 CFR 91.24(c)(3)) is amended to read as follows. The introductory text of paragraph (c) is reprinted without change for the convenience of the reader:

**§ 91.24 ATC transponder and altitude reporting equipment and use.**

* * * * *

(c) *ATC authorized deviations.* ATC may authorize deviations from paragraph (b) of this section—

* * * * *

(3) On a continuing basis, or for individual flights, for operations of aircraft without a transponder, in which case the request for a deviation must be submitted to the ATC facility having jurisdiction over the airspace concerned at least one hour before the proposed operation.

(Secs. 307(a), 313(a) and 601, Federal Aviation Act of 1958, as amended (49 U.S.C. 1348(a), 1354(a) and 1421); sec. 6(c), Department of Transportation Act (49 U.S.C. 1655(c)).)

**Note.**—This amendment reduces the burden on pilots operating aircraft without transponders by permitting pilots to fly into certain controlled airspace on less than four hour notice, and permits more efficient functioning of the ATC system. The expected economic impact is minimal, involves no costs, and will have only positive impacts. Therefore, this action does not warrant preparation of a regulatory evaluation, and the FAA has determined that it is not a major rule under Executive Order 12291 or a significant regulation under the Department of Transportation Regulatory Policies and Procedures (44 FR 11034; February 26, 1979). In addition, for the reasons discussed above I certify that, under the criteria of the Regulatory Flexibility Act, this regulatory action will not have a significant economic impact on a substantial number of small entities.

Issued in Washington, D.C. on January 17, 1983.

**J. Lynn Helms,**

*Administrator*

[FR Doc. 83-3261 Filed 2-9-83; 8:45 am]

BILLING CODE 4910-13-M

---

## Federal Highway Administration

## 23 CFR Ch. I

## National Motor Carrier Advisory Committee

**Note.**—This document originally appeared in the **Federal Register** of Tuesday, February 8, 1983. It is reprinted in this issue to meet requirements for publication on the Monday/Thursday schedule assigned to the Federal Highway Administration.

**AGENCY:** Federal Highway Administration (FHWA), DOT.

**ACTION:** Notice of public meetings.

**SUMMARY:** The FHWA announces that the National Motor Carrier Advisory Committee will hold a series of public meetings in San Francisco, California; Chicago, Illinois; and Washington, D.C., to solicit comments concerning the statement of FHWA interpretation and policy addressing the truck size and weight provisions contained in the Surface Transportation Assistance Act of 1982 (STAA) and the DOT Appropriations Act of 1982. The FHWA statement was issued in February 1, 1983, and published in the **Federal Register** on February 3, 1983 (48 FR 5210).

**DATES:** The meetings will be held beginning at 9:00 a.m. on February 24, 1983 in Washington, D.C., on March 2, 1983 in Chicago, Ill.; on March 10, 1983 in San Francisco, Calif.

**ADDRESSES:** The meetings will be held at the following places:

February 24, 1983 in Washington, D.C., at the Department of Transportation's Headquarters Building, 400 Seventh Street, SW., Room 2230.

March 2, 1983 in Chicago, Illinois, at the Federal Building, 230 S. Dearborn Street, Room 349.

March 10, 1983 in San Francisco, California, at the Federal Building, 450 Golden Gate Avenue, Room 200.

**FOR FURTHER INFORMATION CONTACT:** Mr. James J. Stapleton, Acting Executive Director, National Motor Carrier Advisory Committee, Federal Highway Administration, HCC-20, Room 4224, 400 Seventh Street, SW., Washington, D.C. 20590, (202) 426-0834. Office hours are from 7:45 a.m. to 4:15 p.m. ET, Monday through Friday.

**SUPPLEMENTARY INFORMATION:** 1. *Agenda.* The agenda of the meetings will be limited to the receipt of comments concerning the statement of FHWA interpretation and policy addressing the truck size and weight provisions contained in the STAA and the DOT Appropriations Act of 1982. The FHWA statement addressed the explicit truck weight, length and width statutory provisions and the following primary issues relating to those provisions:

(a) Effective dates;

(b) Identification of the "qualifying highways" referred to in Sections 411 of the STAA and 321 of the DOT Appropriations Act; and

(c) Definition of "reasonable access" referred to in Sections 133 and 412 of the STAA.

2. *Submission of comments and request to testify.* Interested persons are invited to comment on the subject-matter of the meetings. Written comments may be submitted at the time and place of the meetings. (These comments are in addition to any comments that anyone may wish to submit in response to the request for comments in connection with the FHWA policy statement published in the **Federal Register** on February 3, 1983.

Anyone desiring an opportunity to make an oral presentation at one of the meetings should make a written request to do so at least ten days prior to the date of the meeting in question. The person making the request should describe his or her interest and, if appropriate, state whether he or she is a representative of a group or class of persons that has such an interest. A telephone number should be given where he or she may be contacted up until the day before the meeting. Requests to testify should be addressed to: Mr. James J. Stapleton, Acting Executive Director, National Motor Carrier Advisory Committee, Federal Highway Administration, HCC-20,

Room 4224, 400 Seventh Street, SW., Washington, D.C. 20590.

3. *Conduct of Meetings.* The Advisory Committee reserves the right to limit the number of speakers from any one group or organization to be heard at the meetings, to schedule their respective presentations, and to establish the procedures governing the conduct of the meetings. The length of each presentation may be limited, based on the number of persons or organizations requesting to be heard.

A member of the Advisory Committee will be designated to preside at the meetings, which will not be judicial or evidentiary-type hearings. Questions may be asked only by members of the Advisory Committee or the Acting Executive Director, and there will be no cross examination of persons presenting statements.

Any person attending and who wishes to ask a question may submit the question in writing to the presiding officer.

Any further procedural rules needed for the proper conduct of the meetings will be announced by the presiding officer.

Issued on: February 4, 1983.

**R. A. Barnhart,**

*Federal Highway Administrator, Federal Highway Administration.*

[FR Doc. 83-3471 Filed 2-7-83; 8:45 am]

BILLING CODE 4910-22-M

---

## Coast Guard

## 33 CFR Part 100

**[CGD11 11-01-83]**

## Establishment of Special Local Regulations for the "Del Rey to Puerto Vallarta Race"

**AGENCY:** Coast Guard, DOT.

**ACTION:** Final rule.

**SUMMARY:** Special local regulations are being adopted for the Del Rey to Puerto Vallarta Race Regatta in Santa Monica Bay. This event will be held on February 19, 1983, outside the Marina Del Rey Breakwater. The regulations are needed to provide for the safety of life on navigable waters during the event.

**EFFECTIVE DATE:** These regulations become effective on February 19, 1983, and terminate on February 19, 1983.

**FOR FURTHER INFORMATION CONTACT:** LT. N. M. TURNER, Commander(bpa), Eleventh Coast Guard District, 400 Oceangate, Long Beach, California 90822, (213) 590-2213.

**SUPPLEMENTARY INFORMATION:** A notice of proposed rule making has not been published for these regulations and they are being made effective in less than 30 days from the date of publication. There was not sufficient time to publish proposed rules in advance of the event or to provide for a delayed effective date.

*Drafting Information.* The principal individuals involved in drafting this rule are LT. Noris M. Turner, Chief, Boating and Public Affairs Branch, Eleventh Coast Guard District, and LT. Catherine M. Kelly, Project Attorney, Legal Office, Eleventh Coast Guard District.

*Discussion of Regulations:* The Del Rey Yacht Club's "DEL REY TO PUERTO VALLARTA REGATTA" will be conducted beginning February 19, 1983, in Santa Monica Bay outside the Marina Del Rey Breakwater. This event will have 25-35 sailboats 33- to 79-feet in length that could pose hazards to navigation. Vessels desiring to transit the regulated area may do so only with clearance from a patrolling law enforcement vessel or an event committee boat.

*Evaluation:* These regultions have been reviewed under the provisions of Executive Order 12291 and have been determined not to be a major rule. This conclusion follows from the fact that the regulated area will be open for the passage of commercial vessels and can be opened periodically to recreational vessels.

### List of Subjects in 33 CFR Part 100

Marine safety, Navigation (water).

## PART 100—SAFETY OF LIFE ON NAVIGABLE WATERS

*Final Regulations:* In consideration of the foregoing, Part 100 of Title 33, Code of Federal Regulations, is amended by adding the following section:

**§ 100.35-11-1101 Del Rey Yacht Club/Del Rey to Puerto Vallarta Race.**

(a) *Regulated Area:* The following regulated area will be closed intermittently to all vessel traffic from 12:30 PM to 2:00 PM on February 19, 1983: for start of subject race, bounded by the following coordinates:

| | |
|---|---|
| 33°56'23" N., | 118°28'20" W., |
| 33°56'23" N., | 118°28'55" W., |
| 33°56'55" N., | 118°28'55" W., |
| 33°56'55" N., | 118°28'20" W. |

(b) *Special Local Regulations.*

(1) No vessels, other than participants, U.S. Coast Guard operated and employed small craft, public vessels, state and local law enforcement agencies and the sponsor's vessels shall enter the regulated area during the above hours, unless cleared for such entry by or through a patrolling law enforcement vessel, or an event committee boat.

(2) When hailed by Coast Guard or Coast Guard Auxiliary vessels patrolling the event area, a vessel shall come to an immediate stop. Vessels shall comply with all directions of the designated Coast Guard Regatta Patrol.

(3) These regulations are temporary in nature and shall cease to be in effect or further enforced at the end of the period set forth.

(46 U.S.C. 454, 49 U.S.C. 1655(b)(1); 33 CFR 100.35; 49 CFR 1.46(b))

Dated: February 1, 1983.

**A. P. Manning,**

*Rear Admiral, U.S. Coast Guard, Commander, Eleventh Coast Guard District.*

[FR Doc. 83-3609 Filed 2-9-83; 8:45 am]

BILLING CODE 4910-14-M

---

## 33 CFR Part 165

## COTP Hampton Roads, VA, Regulation 83-03; Safety Zone Regulations; Elizabeth River, Norfolk, Virginia

**AGENCY:** Coast Guard, DOT.

**ACTION:** Emergency rule.

**SUMMARY:** The Coast Guard is establishing a safety zone around the USS *John F. Kennedy* in the Elizabeth River, Norfolk, Virginia. The zone is needed to protect watercraft from possible damage during the movement of the USS *John F. Kennedy.* Entry into this zone is prohibited unless authorized by the Captain of the Port.

**EFFECTIVE DATES:** This regulation becomes effective at 8:00 a.m., Eastern Standard Time, February 7, 1983. It terminates at 10:00 a.m., Eastern Standard Time, February 7, 1983.

**FOR FURTHER INFORMATION CONTACT:** Lieutenant Commander W. K. Six, Chief, Port Operations Department, Coast Guard Marine Safety Office, Hampton Roads, Norfolk, Virginia 23510, (804) 441-3296.

**SUPPLEMENTARY INFORMATION:** A notice of proposed rulemaking was not published for this regulation and it is

being made effective in less than 30 days after **Federal Register** publication. Publishing an NPRM and delaying its effective date would be contrary to the public interest since immediate action is needed to prevent possible damage to the vessels involved.

*Drafting Information*

The drafters of this regulation are Lieutenant Commander W. K. Six, project officer for the Captain of the Port, and Commander D. J. Kantor, project attorney, Fifth Coast Guard District Legal Office.

*Discussion of Regulation*

The hazard requiring this regulation will begin at 8:00 a.m., Eastern Standard Time, February 7, 1983. The restricted nature of the Elizabeth River and the reduced amount of maneuverability of the USS *John F. Kennedy* pose a threat to other watercraft in the area. Excluding vessels moored prior to transit and which remain so moored, waterborne traffic will be prohibited from entering or remaining in the safety zone when in effect.

**List of Subjects in 33 CFR Part 165**

Harbors, Marine safety, Navigation (water), Security measures, Vessels, Waterways.

## PART 165—[AMENDED]

In consideration of the foregoing, Part 165 of Title 33, Code of Federal Regulations, is amended by adding a new § 165.T514 to read as follows:

**§ 165.T514 Safety Zone: Elizabeth River, Norfolk, Virginia.**

(a) *Location.* The following area is a safety zone: A circle with a radius of 500 yards with the USS *John F. Kennedy* as its center while transiting the Elizabeth River from the Norfolk Naval Shipyard, Portsmouth, Virginia to anchorage area Whiskey, Hampton Roads, Virginia.

(b) *Regulations:*

(1) In accordance with the General regulations in § 165.23 of this part, entry into this zone is prohibited unless authorized by the Captain of the Port.

(33 U.S.C. 1225 and 1231; 49 CFR 1.46; 33 CFR 165.3)

Dated: January 21, 1983.

J. D. Webb,

*Captain, Coast Guard, Captain of the Port, Hampton Roads, Coast Guard.*

[FR Doc. 83-3610 Filed 2-9-83; 8:45 am]

BILLING CODE 4910-14-M

## ENVIRONMENTAL PROTECTION AGENCY

**40 CFR Part 52**

**[A-9-FRL 2272-1]**

## Approval and Promulgation of Implementation Plans; State of Nevada

**AGENCY:** Environmental Protection Agency (EPA).

**ACTION:** Final rulemaking.

**SUMMARY:** The State of Nevada has submitted a revision to their State Implementation Plan (SIP) for Lead. This revision provides a plan for maintenance of the Lead National Ambient Air Quality Standards (NAAQS). EPA has reviewed the submitted revision with respect to Section 110 of the Clean Air Act and determined that it should be approved.

**EFFECTIVE DATE:** This action is effective April 11, 1983.

**FOR FURTHER INFORMATION CONTACT:** David P. Howekamp, Acting Director, Air Management Division, Region 9 Environmental Protection Agency, 215 Fremont Street, San Francisco, CA 94105. Attn: Douglas Grano (415) 974-7641.

**ADDRESS:** A copy of the revision to the Nevada State Implementation Plan (SIP) for Lead is located at the Region 9 Office and the following locations:

The Office of the Federal Register, 1100 "L" Street, NW., Room 8401, Washington, D.C. 20408

Department of Conservation and Natural Resources, Division of Environmental Protection, Capitol Complex, Carson City, NV 89770.

**SUPPLEMENTARY INFORMATION:**

**Background**

On October 5, 1978, EPA promulgated the primary and secondary NAAQS for Lead. The Standards were set at a level of 1.5 micrograms of lead per cubic meter of air, averaged over a calendar quarter. Section 110 of the Clean Air Act requires states to submit implementation plans to EPA detailing how the NAAQS will be achieved and maintained in their areas.

EPA published requirements for Lead SIPs in 40 CFR Part 51 (43 FR 46264). These provisions require the submission of air quality data, emissions data, a control strategy, air quality modeling, and a demonstration that the Lead NAAQS will be attained within the time frame specified by the Clean Air Act.

The Nevada Division of Environmental Protection (NDEP) began monitoring ambient particulate lead concentrations in 1975. Only three air quality basins out of Nevada's 256 ever violated the ambient air quality standard and only one air basin has a significant stationary source. There have been no violations since the last quarter of 1975.

On June 24, 1980, the State of Nevada submitted a revision to their Lead SIP for Clark County. This revision provided a county-wide plan for attainment/maintenance of the Lead NAAQS. On February 12, 1981 (46 FR 12020) EPA proposed to approve Clark County's revision to the Nevada SIP and on June 30, 1982 (47 FR 28374), the Clark County portion of the Nevada Lead SIP was approved. On November 5, 1981, the Governor of Nevada submitted a revision to the SIP for lead covering all areas except Clark and Washoe Counties.

**Discussion**

The November 5, 1981 revision to the Nevada SIP was compared with the applicable requirements of 40 CFR Part 51, including emission inventory, control strategy, modeling, and new source review.

Since automobile generated lead emissions are the only notable lead emission sources in all but one air basin (Steptoe Valley), the evaluation contained in the SIP centers on these sources.

The SIP's control strategy for maintenance of the Lead NAAQS is the reduction of the amount of lead in gasoline as mandated by EPA (38 FR 33734). The control strategy for the one significant stationary source, the McGill Copper Smelter, is the production limitation placed on the smelter by the existing permit conditions which are part of the SIP.

The SIP contains a dispersion modeling analysis around the McGill Copper Smelter and a rollback modeling analysis for the Steptoe Valley, which demonstrate attainment.

In addition, Nevada has a permitting program previously approved by EPA for new stationary sources of lead that emit 5 tons/year or more. The above SIP elements satisfy the requirements of 40 CFR Part 51 for the lead.

**EPA Actions**

As a result of the above evaluation, EPA is taking final action under Section 110 of the Clean Air Act to approve the revision to the Nevada Lead SIP.

EPA's approval is being done without prior proposal because the Lead SIP is non-controversial. The public should be advised that this approval action will be effective 60 days from the date of this notice. However, if notice is received by

EPA within 30 days that someone wishes to submit adverse or critical comments, the approval action will be withdrawn and a subsequent notice will indefinitely postpone the effective date, modify the final action to a proposal action, and establish a comment period.

### Regulatory Process

The Office of Management and Budget has exempted this rule from the requirements of Section 3 of Executive Order 12291.

Under the Clean Air Act, any petitions for judicial review of this action must be filed in the United States Court of Appeals for the appropriate circuit by (60 days from today). This action may not be challenged later in proceedings to enforce its requirements.

Incorporation by reference of the State Implementation Plan for the State of Nevada was approved by the Director of the **Federal Register** on July 1, 1982.

Under 5 U.S.C. 605(b), the Administrator has certified that SIP approvals do not have a significant economic impact on a substantial number of small entities. (See 46 FR 8709.)

(Secs. 110 and 301(a) of the Clean Air Act, as amended (42 U.S.C. 7410 and 7601(a))

### List of Subjects in 40 CFR Part 52

Air pollution control, Ozone, Sulfur oxides, Nitrogen dioxide, Lead, Particulate matter, Carbon monoxide, Hydrocarbons, Intergovernmental relations.

Dated: January 28, 1983.

**Anne M. Gorsuch,**

*Administrator.*

Subpart DD of Part 52 Chapter I, Title 40 of the Code of Federal Regulations is amended as follows:

### Subpart DD—Nevada

Section 52.1470 is amended by adding paragraph (c)(24)(v) as follows:

**§ 52.1470 Identification of plan.**

* * * * *

(c) * * *

(24) * * *

(v) Nevada State Lead SIP Revision submitted by the State on November 5, 1981.

* * * * *

[FR Doc. 83-3460 Filed 2-9-83; 8:45 am]

BILLING CODE 6560-50-M

**40 CFR Part 52**

**[A-4-FRL 2277-4; NC-004]**

## Approval and Promulgation of Implementation Plans; North Carolina; Revised $SO_2$ Emission Limit for Eight Sources

**AGENCY:** Environmental Protection Agency.

**ACTION:** Final rule.

**SUMMARY:** EPA today announces approval of a revised sulfur dioxide ($SO_2$) emission limit for eight fuel-burning sources in North Carolina. The original North Carolina State Implementation Plan (SIP) approved in 1972 specified an $SO_2$ limit of 1.6 pounds per million British thermal units (#/MMBTU) of heat input for all fuel-burning sources. EPA gave final approval of a revised limit of 2.3 #/MMBTU, for all but 24 affected sources, on December 7, 1982 (47 FR 54934). (Refer to this site for additicnal support documentation.) Additional information submitted during the public comment period by the State indicated that 8 of the 24 sources excluded from the rulemaking of December 7, 1982, could emit at the 2.3 #/MMBTU limit and still protect the national ambient air quality standards (NAAQS). Therefore, EPA is today approving the 2.3 #/MMBTU $SO_2$ limit for these eight sources. This action is being taken without prior proposal.

**EFFECTIVE DATE:** This action will be effective on April 11, 1983, unless notice is received within 30 days that someone wishes to submit adverse or critical comments.

**ADDRESSES:** Copies of the materials submitted by the State may be examined during normal business hours at the following locations:

Public Information Reference Unit, Library Systems Branch, Environmental Protection Agency 401 M Street, SW., Washington, D.C. 20460

Library Office of the Federal Register, 1100 L Street NW., Room 8401, Washington, D.C. 20005

Air Management Branch, EPA Region IV, 345 Courtland Street NE., Atlanta, Georgia 30365

North Carolina Department of Natural Resources & Community Development, P.O. Box 27687, Raleigh, North Carolina 27611.

**FOR FURTHER INFORMATION CONTACT:** Mr. Raymond S. Gregory, Air Management Branch, EPA Region IV, at the above address, telephone 404/881-3286 (FTS 257-3286).

**SUPPLEMENTARY INFORMATION:** On January 11, 1982, North Carolina submitted to EPA additional information which was required before EPA could approve a SIP revision removing from regulation 15 NCAC 2D.0516 the requirement that fuel-burning sources of $SO_2$ reduce their emissions from 2.3 #/MMBTU of heat input to 1.6 #/MMBTU by July 1, 1980. The original submittal of March 22, 1977, lacked adequate air quality dispersion modeling and related analysis of the impact of $SO_2$ emissions from the affected sources.

In addition the January 11, 1982, submittal identified 24 sources for which the State could not recommend approval of the 2.3 #/MMBTU limit. The modeling and associated analysis showed that the ambient standards would probably not be protected if the 24 sources were allowed to emit at the higher limit. EPA gave final approval of the revision, except for its application to those 24 sources, in the **Federal Register** on December 7, 1982 (47 FR 54934).

During the public comment period, the State submitted on July 27 and August 26, 1982, information which showed that there were errors in the original modeling efforts. These errors included incorrect stack parameters—exit temperatures, velocities, etc. After review of the additional information submitted by the State, EPA finds that the following eight sources can be allowed to emit at the 2.3 #/MMBTU limit while protecting the NAAQS for sulfur dioxide.

| *Source* | *County* |
|---|---|
| Pfizer | Brunswick |
| Cranston Print Works | Henderson |
| Dorothea Dix | Wake |
| Estach General Chemical | Brunswick |
| USS Agrichem | Brunswick |
| Cannon Mills #1 | Cabarrus |
| Seymour Johnson AFB | Wayne |
| Duke-Allen | Gaston |

### Action

Accordingly, EPA today approves the revised $SO_2$ limit of 2.3 #/MMBTU for the eight sources listed above. The effect of this action is to reduce the number of sources that are not being approved to emit at 2.3 #/MMBTU from 24 to 16. The 16 that are not approved will have an emission limit of 1.6 #/MMBTU (current limit), and will consist of the list of 24 appearing in the December 7, 1982, **Federal Register** (47 CFR 54934) minus the 8 listed above. Since the issues involved in this action are straightforward and little or no public concern is anticipated, this action is taken without prior proposal. The public should be advised that this action will be effective 60 days from the date of this

Federal Register notice. However, if notice is received within 30 days that someone wishes to submit adverse or critical comments, this action will be withdrawn and two subsequent notices will be published before the effective date. One notice will withdraw the final action and another will begin a new rulemaking by announcing a proposal of the action and establishing a comment period.

Under Section 307(b)(1) of the Act, petitions for judicial review of this action must be filed in the United States Court of Appeals for the appropriate circuit by April 11, 1983. This action may not be challenged later in proceedings to enforce its requirements. (See 307(b)(2).)

Under 5 U.S.C. Section 605(b), the Administrator has certified that SIP approvals do not have a significant economic impact on a substantial number of small entities. (See 46 FR 8709).

The Office of Management and Budget has exempted this rule from the requirements of Section 3 of Executive Order 12291.

Note.—Incorporation by reference of the State Implementation Plan for the State of North Carolina was approved by the Director of the Federal Register on July 1, 1982.

### List of Subjects in 40 CFR Part 52

Air pollution control, Intergovernmental relations, Ozone, Sulfur oxides, Nitrogen dioxide, Lead, Particulate matter, Carbon monoxide, Hydrocarbons.

(Sec. 110, Clean Air Act (42 U.S.C. 7410))

Dated: January 19, 1983.

**Anne M. Gorsuch,**

*Administrator.*

## PART 52—[AMENDED]

Part 52 of Chapter I, Title 40, Code of Federal Regulations, is amended as follows:

### Subpart II—North Carolina

Section 52.1770 is amended by adding paragraph (c)(34) as follows:

**§ 52.1770 Identification of plan.**

* * * * *

(c) * * *

(34) Revised $SO_2$ limit for eight fuel-burning sources (See FR of February 10, 1983), submitted on March 22, 1977, and January 11, July 27, and August 26, 1982, by the North Carolina Department of Natural Resources and Community Development.

[FR Doc. 83-3461 Filed 2-9-83; 8:45 am]
BILLING CODE 6560-50-M

## GENERAL SERVICES ADMINISTRATION

### 41 CFR Part 101-36

[FPMR Amdt. F-57]

### ADP Management; Computer Performance Evaluation and ADP Simulation

**AGENCY:** General Services Administration.

**ACTION:** Final rule.

**SUMMARY:** This regulation advises agencies that computer performance evaluation is an ADP support service, and as such, agencies do not require GSA authorization to procure this type of service. The Federal Computer Performance Evaluation and Simulation Center (FEDSIM) is to be considered by Federal Agencies as a source of acquisition for computer performance evaluation requirements, services, and products, but agencies may now obtain these services from commercial sources without a Delegation of Procurement Authority from GSA. The intended effect of this regulation is to conform provisions to new Federal Procurement Regulation Subpart 1-4.12 and to reduce interagency paperwork.

**EFFECTIVE DATE:** February 10, 1983.

**FOR FURTHER INFORMATION CONTACT:** Roger W. Walker, Policy Branch, Office of Information Resources Managment Policy (202-566-0194).

**SUPPLEMENTARY INFORMATION:** The General Services Administration has determined that this rule is not a major rule for the purposes of Executive Order 12291 of February 17, 1981. The General Services Administration's decisions are based on adequate information concerning the need for and consequences of this rule. This rule has been structured to maximize the benefits to Federal agencies. This is a Government-wide internal management regulation that will have little or no effect on society.

### List of Subjects in 41 CFR Part 101-36

ADP, Computer technology, Government procurement, Government property management, Security measures.

## PART 101-36—[AMENDED]

1. Section 101-36.1402-1 is revised to read as follows:

**§ 101-36.1402-1 Services available.**

(a) FEDSIM resources and FEDSIM monitored contractual services are available nationally. These services include simulation languages and packages for computer system simulations, software and hardware monitors for computer system performance evaluation, and special software programs designed to support computer system simulation and performance evaluation efforts, such as accounting systems analysis and workload modeling. The Center can also provide support services such as simulation analysis.

(b) The Center responds to specific questions or problems. The Center does not provide continuous simulation and performance evaluation programs in support of individual agency user operations.

2. Section 101-36.1402-3 is revised to read as follows:

**§ 101-36.1402-3 Policy for obtaining ADP simulation and computer performance evaluation and services from the Federal Computer Performance Evaluation and Simulation Center.**

(a) Federal agencies shall consider the Center as a source of supply for ADP simulation and computer performance evaluation requirements, services, and products, including but not limited to computer systems simulators and hardware and software monitors. The Center provides these ADP support services at the least possible cost to the Government.

(b) The Center advises agencies whether (i) FEDSIM resources or FEDSIM contracts are available; (ii) an ADP schedule is available as a source of supply; (iii) a new procurement action is necessary.

(c) Any ADP simulation contracts/schedules issued by GSA will include provisions requiring that agencies contact the Center for advice before ordering from these contracts/schedules.

(d) If the Center is unable to fulfill the requirement or if the requirement can be more economically fulfilled through commercial sources, the agency may procure the services.

3. Section 101-36.1403 is amended by revising paragraphs (b) and (c) to read as follows:

**§ 101-36.1403 Procedure for obtaining ADP simulation and computer performance evaluation services from the Federal Computer Performance Evaluation and Simulation Center.**

* * * * *

(b) The Center, consistent with the lowest cost alternative or combination

of alternatives, will take one of the following four actions:

(1) Provide services from its own resources on a reimbursable basis to the requesting agency.

(2) Procure, on a reimbursable basis, the necessary support from commercial sources for the requesting agency.

(3) Advise the requesting agency's procurement activity how to:

(i) Procure necessary support from the ADP schedule or other existing contractual instruments; or

(ii) Initiate a procurement action for the services.

(4) Recommend to GSA that GSA procure required resources for the requesting agency (where unusual legal or procurement policy issues so dictate).

(c) If the Center does not act within 20 workdays after acknowledging that it has received full information about an agency's request for services, the agency may proceed without further reference to the Center.

(Sec. 205(c), 63 Stat. 390, 40 U.S.C. 486(c))

Dated: January 13, 1983.

Ray Kline,

*Acting Administrator of General Services.*

[FR Doc. 83-3429 Filed 2-9-83; 8:45 am]

BILLING CODE 6820-25-M

## DEPARTMENT OF HEALTH AND HUMAN SERVICES

### Health Care Financing Administration

### 42 CFR Part 405

### Elimination of Medicare Indirect Subsidy for Private Rooms

**AGENCY:** Health Care Financing Administration (HCFA), HHS.

**ACTION:** Final rule.

**SUMMARY:** This final rule, which implements section 111 of Pub. L. 97-248 (the Tax Equity and Fiscal Responsibility Act of 1982), precludes Medicare from sharing in the added cost of private rooms in hospitals and skilled nursing facilities (SNFs) unless the rooms are used by Medicare patients, and are medically necessary. In accordance with the statute, regulations implementing this provision were published on an interim final basis on September 28, 1982. This document responds to the public comments we received on the interim final regulations, and sets forth final Medicare regulations with respect to elimination of the private room subsidy.

**EFFECTIVE DATE:** For cost reporting periods beginning on or after October 1, 1982.

**FOR FURTHER INFORMATION CONTACT:** William J. Goeller, (301) 597-1802.

**SUPPLEMENTARY INFORMATION:**

## I. Background

### *A. 1982 Legislation*

On September 3, 1982, the Tax Equity and Fiscal Responsibility Act of 1982 (Pub. L. 97-248) was enacted. Section 111(a) of this Act specifies that the Secretary shall not allow as a reasonable cost the estimated amount by which costs for nonmedically necessary private room accommodations used by Medicare beneficiaries exceeds the costs that would have been incurred for semi-private accommodations. Neither section 111 nor the Conference Committee Report accompanying the legislation (H.R. Rep. No. 97-760, pages 422f) states precisely how an estimate of the additional cost of nonmedically necessary private rooms is to be developed. However the Senate Finance Committee Report on H.R. 4961, which was considered by the Conference Committee in recommending enactment of Pub. L. 97-248, does suggest that this be accomplished by subtracting from a provider's allowable cost the estimated differential cost based on the differential charges for private rooms over semi-private rooms (S. Rep. No. 97-494, page 27).

Section 111(b) did specify, however, that final regulations to implement this provision, whether issued on an interim or other basis, were to be published by October 1, 1982. The law further specified that if the regulations were issued on an interim final basis, a final rule must be published by January 31, 1983.

### *B. Interim Final Regulations*

On September 28, 1982, the Department published interim final regulations intended to eliminate the indirect subsidy of private rooms (47 FR 42676). They were issued on an interim final basis and provided a 30-day period for public comment; thus they also provided an opportunity for appropriate revisions to the regulations.

Specifically, the interim rule amended the Medicare regulations on cost apportionment (42 CFR 405.452) to revise the methodology for computing reimbursement for inpatient general routine service costs. Under the amended regulations, Medicare's methodology for computing reimbursement for inpatient routine services provides for including the difference in cost between semi-private and private accommodations in Medicare reimbursement only when private rooms are furnished to Medicare beneficiaries for medically necessary reasons. In this manner, reimbursement for medically unnecessary private room days used by Medicare beneficiaries will not exceed the reasonable cost of services furnished in semi-private rooms, while the higher cost of medically necessary private rooms actually used by Medicare beneficiaries will be specifically recognized. (Under the regulations, providers are still permitted to collect the private room charge differential from Medicare beneficiaries when private rooms are requested and are not medically necessary.) In addition, under this methodology, Medicare no longer shares in the cost of private rooms used by non-Medicare patients.

In general, this rule requires each provider to determine its total cost of private rooms over semi-private room accommodations furnished to all patients, and to exclude this amount from its total inpatient general routine service costs, as suggested by the Senate Finance Committee report. The provider also is required to calculate its per diem inpatient general routine service cost, and the per diem amount of the private room cost differential.

The interim final rule stated that the provider must, to determine its allowable cost of inpatient general routine services furnished to Medicare patients, multiply its per diem inpatient general routine service cost, excluding the private room cost differential, by the number of days of care it furnished to all Medicare beneficiaries without regard to the type of accommodation utilized, and add to this the product of its per diem private room cost differential times the number of days of care it furnished Medicare beneficiaries in medically necessary private rooms. (For purposes of this calculation, "private rooms" and "semi-private rooms" include rooms in sub-intensive or intermediate care units that do not qualify for separate reimbursement as intensive care type units under 42 CFR 405.452(d)(10).)

As we stated in the preamble of the interim final rule, we believe that application of the charge basis methodology for recognizing only the costs of medically necessary private rooms used by Medicare beneficiaries most effectively implements the requirements of the Medicare law regarding payment of inpatient general routine services in private rooms furnished by hospitals and SNFs. As further discussed below, after review of the public comments we received on the interim final rule, we continue to believe that timely implementation of these

regulations can best be accomplished through our published methodology.

**II. Response to Public Comments**

In response to our request for public comment on the interim final regulations, we received a total of 35 comments from various providers, hospital associations, medical societies, and concerned individuals. The comments primarily dealt with four areas of concern: (1) The use of the charge methodology specified in the interim regulations, (2) those providers having only private rooms, (3) the impact of these regulations on hospitals providing swing-bed services, and (4) the definition of medical necessity. Set forth below is a summary of those comments and our responses.

1. *Use of charges in determining the private room cost differential.*

*Comment:* Many commenters disagreed with the use of charges in determining the private room cost differential, on the basis that the difference in charges between private rooms and semi-private rooms is not related to the higher cost for the rooms. According to the commenters, charges for private rooms vary widely, with some providers charging the same amount for both types of accommodations, while others charge substantially more for private rooms. Several commenters indicated that private room charges are related to supply and demand and, therefore, fluctuate with the market. The commenters stated that these fluctuations are not related to a specific increase or decrease in the cost of a room. In some cases, commenters stated that the higher charges for private rooms are intended to be revenue-producing, and are often used to subsidize care furnished in other types of accommodations.

Several commenters indicated that, under the methodology set forth in the interim regulations, providers could influence the private room cost differential by altering their existing charge structure. Other commenters expressed concern that the methodology would not be applied uniformly between States with stringent rate review procedures and States with less stringent or no rate review procedures.

Many commenters requested use of an alternative approach under which the higher costs of a private room could be determined through the identification of space-related costs attributable to the additional space per bed in private accommodations. These commenters noted that various space-related costs, such as depreciation, maintenance and repairs, operation of plant, and housekeeping services, primarily contribute to the higher costs of a private room based on the larger space per bed. They added that other costs, such as nursing and dietary services, laundry and linen, and medical records, are not related to the type of accommodation, and therefore, do not contribute to the increased cost of a private room.

*Response:* Although most commenters opposed the use of a charge-related methodology for identifying the added costs of private rooms, we believe that our approach is equitable to both the providers and the Medicare program, since this methodology is based on a provider's own charges. As such, the approach is consistent with the existing cost apportionment procedure for other similar costs of hospitals and SNFs (42 CFR 504.452(b)(1)). (For example, in apportioning the costs of ancillary services, Medicare applies to the cost of each ancillary department a ratio of beneficiary charges to total patient charges for the services of that department.)

In addition, we do not believe that allowing providers to adopt cost finding procedures to calculate the additional cost attributable to private rooms is feasible at this time. (As defined in 42 CFR 405.453(b)(1), cost finding is a process by which data from a provider's accounts are recast to compute costs of the various types of services furnished.) We are not convinced that space-related costs represent the only cost differences between private and semi-private room accommodations.

Further, we believe that imposing a cost finding procedure on all providers may be unduly burdensome and administratively costly for those providers that do not have adequate accounting capability. While we will continue to study the feasibility and equity of alternative methods of calculating the private room differential, we believe that the timely implementation of these regulations, in accordance with the effective date set forth in the statute, can best be accomplished through use of the charge methodology specified in the interim final regulations.

*Comment:* With respect to the specific mechanics of the methodology, some commenters stated that such general routine accommodations as ward accommodations and subintensive or intermediate care units should be excluded in the determination of the private room differential.

*Response:* We believe it would be inappropriate to exclude subintensive or intermediate care units in computing the private room differential, since they are considered a part of general routine care for purposes of program reimbursement. Under the established methodology, if subintensive or intermediate care units were set up as private rooms, Medicare usage of these rooms for medically necessary reasons would appropriately result in increased reimbursement to providers.

While commenters noted that ward accommodations (rooms with five or more beds) should be excluded in calculating the private room differential, we believe that the use of such accommodations is not significant and that the inclusion of these accommodations will have little, if any, cost impact on providers. We continue to believe that the administrative ease by which providers can implement our published methodology justifies the inclusion of such days in the computation.

2. *Providers having only private room accommodations.*

*Comment:* Some commenters believed that the methodology set forth in our interim final regulations should not apply to hospitals offering only private room accommodations or to services furnished in a separate hospital wing with only private rooms. Other commenters, however, felt that providers having both semi-private and private accommodations will be unfairly disadvantaged if providers with only private rooms are exempted.

*Response:* Medicare regulations at 42 CFR 405.116(b) and 405.125(c), along with implementing manual instructions (HCFA–Pub. 13–3, §§ 230.2 and 3101.1), in part, provide that a private room would be considered medically necessary when a patient's condition warrants isolation or when the individual is admitted to a hospital or SNF that does not have semi-private or ward accommodations or when such accommodations are fully occupied. The question of the applicability of the Medicare private room differential would not be pertinent to providers having only private rooms since these accommodations in such providers are considered medically necessary. These regulations will apply, however, to those providers offering both semi-private and private rooms, even if the private rooms are located in a separate wing or in some other way are segregated. We do not believe that it is proper to allow providers to adopt optional approaches in computing the private room cost differential. The regulations do not apply to providers that charge the same for semi-private and private rooms since the basis for the methodology is the private room charge differential.

However, we will continue to evaluate these comments in the application of the regulations.

3. *Impact on hospitals providing swing-bed services.*

*Comment:* One commenter indicated that the "carve out" methodology established for swing-bed services (see 47 FR 31518, July 20, 1982) would allow, contrary to section 111 of Pub. L. 97–248, the additional private room cost for any swing-bed days furnished in such accommodations to remain in general routine cost. As a result, the commenter recommended that we not exempt private room days utilized under the swing-bed provision from the private room differential computation.

*Response:* Section 1883 of the Act specifically prescribes that the total reimbursement due for long-term care services is to be subtracted from total inpatient general routine costs before computing the average cost per diem for general routine hospital care. The law indicates that this approach, referred to as the carve out method, is to be used to allocate routine costs between hospital and long-term care services. After the reimbursement due for the long-term care services is carved out from total routine service costs, the remaining costs are to be attributable to hospital-level services only and, therefore, can only be related to hospital-level days. Given the specific requirements of the swing-bed provision, we do not agree with the commenter that the costs of private rooms utilized by long-term care patients should remain a part of general routine costs after reimbursement due for the long-term care services is subtracted from total routine service costs. On the contrary, we believe section 1883 prohibits us from adopting the approach suggested by this commenter.

4. *Definition of medical necessity.*

*Comment:* Several commenters believe that the definition of medical necessity in 42 CFR 405.116(b) (for hospitals) and in 42 CFR 405.125(c) (for SNFs) is not adequate. One commenter stated that it was difficult for a provider to dispute a physician's orders requiring the isolation of a patient. Another commenter indicated that the phrase "in need of immediate care" contained in 42 CFR 405.116(b) should be clarified.

*Response:* We believe that our existing regulatory provisions, in conjunction with implementing operating instructions, provide an adequate definition of what constitutes medical necessity. Current regulations along with accompanying manual instructions indicate that private accommodations are warranted ordinarily when a patient's condition requires the individual to be isolated or when an individual is admitted to a hospital or SNF that has no semi-private or ward accommodations, or at a time when such accommodations are occupied. Present Medicare manual instructions (HCFA–Pub. 13–3, §§ 3101.1B and A3101.1) also give various examples of instances where medical isolation may be appropriate, and provide additional guidance to providers and intermediaries regarding the determination of medical necessity. For these reasons, we believe our current definitions regarding medical necessity are sufficient and need not be further clarified at this time.

## III. Impact Analysis

### *A. Executive Order 12291*

The Secretary has reaffirmed that these regulations do not meet the criteria for a major rule as defined by section 1(b) of Executive Order 12291. That is, these regulations will not have an annual effect on the economy of $100 million or more; cause a major increase in costs or prices for consumers, government agencies, industry, or a geographic region; or cause significant adverse effects on business or employment.

As indicated in the interim publication, while we do not believe these regulations will meet or exceed the threshold criteria, we cannot set forth at this time a precise estimate of the Medicare program savings resulting from this rulemaking. Savings will vary depending on the relationship of (a) the ratio of Medicare inpatient days to total inpatient days, to (b) the ratio of Medicare medically necessary private room days to total private room days. Where the inpatient day ratio is greater than the private room ratio, we anticipate program savings. In addition, savings will vary with the difference between a provider's charges for semi-private and private rooms.

Therefore, while we are confident that this rule will not meet the criteria set forth in the Executive Order, we are not able to project definitive program savings.

However, as stated in the interim publication, even if we were to determine that our regulations resulted in an impact of $100 million or more, we would not classify this as a major rule for purposes of the Executive Order. This is because we believe that section 111 of the Tax Equity and Fiscal Responsibility Act, and not the regulations which merely implement the statutory provision, has occasioned this impact. Therefore, a regulatory impact analysis is not required.

### *B. Regulatory Flexibility Analysis*

The Secretary recertifies, under 5 U.S.C. 605(b) enacted by the Regulatory Flexibility Act (Pub. L. 96–354), that these regulations will not have a significant economic impact on a substantial number of small entities.

The reason for the Secretary's certification is that, as explained in the impact analysis under the Executive Order section, these rules will not have a major dollar impact. As indicated above, while we do not know exact program savings associated with this revision, we are certain it is less than $100 million. By comparison, the Medicare program will spend approximately $37.5 billion for inpatient services in FY 1983. Thus, even if program savings from this regulation were $100 million, this reduction would still amount to less than a .3 percent reduction in the approximately $37.5 billion Medicare payments nationally for inpatient services in FY 1983.

The actual impact of this rule on an individual provider will vary with the proportion of private rooms used by Medicare beneficiaries compared to semi-private rooms used, and with the provider's charge differential between private and semi-private rooms. As a result, we are not able to predict the precise impact on any individual entity as it is dependent on behavior patterns of providers and beneficiaries. However, nearly all hospitals and SNFs will be affected by this rule since the private room cost differential applicable to all patients will be removed from total general routine service costs before the general routine service costs are apportioned to Medicare. Since the less than .3 percent reduction in Medicare payments would be spread among the thousands of providers affected, we believe the impact on each provider will not be significant.

However, even if there were to be a significant effect on a substantial number of small entities, we have determined that this effect would be the result of the statutory provision, and not these regulations which merely implement these provisions. Therefore, a regulatory flexibility analysis is not required.

## IV. Miscellaneous

### *A. Reporting Requirements*

With respect to private room accommodations, 42 CFR 405.452 contains reporting requirements that are subject to section 3507 of the Paperwork Reduction Act of 1980 (Pub. L. 96–511). HCFA has included these reporting requirements in the Hospital, Skilled

Nursing Facility and Healthcare Complex Cost Report (Form HCFA-2552). The Office of Management and Budget (OMB) has approved the requirements of the HCFA-2552 reporting form under OMB approval number 0938-0050.

*B. Technical Changes*

Among other changes, the final regulations on the coverage and reimbursement of swing-bed services published on July 20, 1982 (47 FR 31518) amended §405.452 by redesignating paragraphs (d)(3) through (d)(10) as paragraphs (d)(5) through (d)(12). As part of the interim final rule published on September 28, 1982 (47 FR 42676), we added a new paragraph, *Average per diem private room cost differential*, to 42 CFR 405.452(d). At that time, we inadvertently designated this new paragraph as paragraph (d)(11), even though § 405.452(d) already contained a paragraph (11) as a result of the redesignation under the swing-bed provisions.

To correct this technical error, we are redesignating the paragraph erroneously designated as (d)(11) in September 28, 1982 document as paragraph (d)(13), reprinting the correct paragraph (d)(11), *Ratio of beneficiary charges for ancillary services to total charges for ancillary services*, and making appropriate changes in cross-references elsewhere in §405.452(b) and (d).

In addition, we are correcting a typographical error appearing in 42 CFR 405.452(b)(1)(ii), line 16 by changing the word "on" to "or".

While these changes are technical and not substantive revisions, we are reprinting the entire regulations text, as amended, for 42 CFR 405.452(b) and (d). We are reprinting these paragraphs for the convenience of the reader, and in order to avoid further misunderstanding.

In addition, under the "DATES" section of the interim rule, the effective date of these regulations should have read "For cost reporting periods beginning on or after October 1, 1982." This omission has been amended in this final rule to indicate the correct effective date.

**List of Subjects in 42 CFR Part 405**

Administrative practice and procedure, Certification of compliance, Clinics, Contracts (Agreements), End-stage renal disease (ESRD), Health care, Health facilities, Health maintenance organizations (HMO), Health professions, Health suppliers, Home health agencies, Hospitals, Inpatients, Kidney diseases, Laboratories, Medicare, Nursing homes, Onsite surveys, Outpatient providers, Reporting and recordkeeping requirements, Rural areas, X-rays.

## PART 405—FEDERAL HEALTH INSURANCE FOR THE AGED AND DISABLED

42 CFR Part 405, Subpart D is amended as set forth below:

1. The authority citation for 42 CFR Part 405, Subpart D, reads as follows:

**Authority:** Secs. 1102, 1814(b), 1833(a), 1861(v), 1871, and 1883, 49 Stat. 647, as amended, 79 Stat. 296, 79 Stat. 302, 79 Stat. 322, 79 Stat. 331; 42 U.S.C. 1302, 1395f(b), 1395l(a), 1395x(v), 1395hh, and 1395tt, unless otherwise noted.

2. 42 CFR 405.452 is amended by revising paragraph (b)(1)(ii) to correct a typographical error, and by revising paragraph (b)(1)(iii)(B) to indicate the correct cross-reference to paragraph (d)(13). In addition to these changes, we are reprinting the entire text of 42 CFR 405.452(b) for the convenience of the reader, as follows:

**§ 405.452 Determination of cost of services to beneficiaries.**

* * * * *

(b) *Principle for cost reporting periods starting after December 31, 1971.* Total allowable costs of a provider shall be apportioned between program beneficiaries and other patients so that the share borne by the program is based upon actual services received by program beneficiaries. For cost reporting periods starting after December 31, 1971, the methods of apportionment are defined as follows:

(1) *Departmental Method.*—(i) *Methodology.* Except as provided in paragraph (b)(1)(ii) of this section with respect to the direct apportionment of malpractice costs, and in paragraph (b)(1)(iii) of this section with respect to the treatment of the private room cost differential for cost reporting periods starting on or after October 1, 1982, the ratio of beneficiary charges to total patient charges for the services of each ancillary department is applied to the cost of the department; to this is added the cost of routine services for program beneficiaries, determined on the basis of a separate average cost per diem for general routine patient care areas as defined in paragraph (d)(7) of this section, taking into account, to the extent pertinent, an inpatient routine nursing salary cost differential (see § 405.430 for definition and application of this differential), and in hospitals, a separate average cost per diem for each intensive care unit, coronary care unit, and other intensive care type inpatient hospital units.

(ii) *Exception: Malpractice insurance.* For cost reporting periods beginning on or after July 1, 1979, costs of malpractice insurance premiums and self-insurance fund contributions must be separately accumulated and directly apportioned to Medicare. The apportionment must be based on the dollar ratio of the provider's Medicare paid malpractice losses to its total paid malpractice losses for the current cost reporting period and the preceding 4-year period. If a provider has no malpractice loss experience for the 5-year period, the costs of malpractice insurance premiums or self-insurance fund contributions must be apportioned to Medicare based on the national ratio of malpractice awards paid to Medicare beneficiaries to malpractice awards paid to all patients. The Health Care Financing Administration will calculate this ratio periodically based on the most recent departmental closed claim study. If a provider pays allowable uninsured malpractice losses incurred by Medicare beneficiaries, either through allowable deductible or coinsurance provisions, or as a result of an award in excess of reasonable coverage limits, or as a governmental provider, such losses and related direct costs must be directly assigned to Medicare for reimbursement.

(iii) *Exception: Indirect cost of private rooms.* For cost reporting periods starting on or after October 1, 1982, the additional cost of furnishing services in private room accommodations is apportioned to Medicare only when these accommodations are furnished to program beneficiaries, and are medically necessary. To determine routine service cost applicable to beneficiaries,

(A) Multiply the average cost per diem (as defined in paragraph (d)(7)(ii) of this section) by the total number of Medicare patient days (including private room days whether or not medically necessary).

(B) Add the product of the average per diem private room cost differential (as defined in paragraph (d)(13) of this section) and the number of medically necessary private room days used by beneficiaries.

(C) The days in paragraphs (b)(iii) (A) and (B) of this section do not include private rooms furnished for SNF type and ICF services under the swing bed provision.

* * * * *

3. 42 CFR 405.452(d) is amended by revising paragraph (d)(7)(ii)(A) to indicate the correct cross-reference to paragraph (d)(13), by designating the paragraph *Ratio of beneficiary charges*

*for ancillary services to total charges for ancillary services* as (d)(11), by redesignating the paragraph *Average per diem private room cost differential* as (d)(13), and by revising the cross-references in paragraph (d)(13)(ii)(C). In addition to these changes, we are reprinting the entire text of 42 CFR 405.452(d) for the convenience of the reader, as follows:

* * * * *

(d) *Definitions*—(1) *Apportionment.* Apportionment means an allocation or distribution of allowable cost between the beneficiaries of the health insurance program and other patients.

(2) *Routine services.* Routine services means the regular room, dietary, and nursing services, minor medical and surgical supplies, and the use of equipment and facilities for which a separate charge is not customarily made.

(3) *SNF-type services.* SNF-type services are routine services furnished by a swing-bed hospital that would constitute extended care services if furnished by a skilled nursing facility. SNF-type services include routine services furnished in the distinct part SNF of a hospital complex that is combined with the hospital general routine service area cost center under § 405.453(d)(5).

(4) *ICF-type services.* ICF-type services are routine services furnished by a swing-bed hospital that would constitute intermediate care facility (ICF) services, as defined in § 440.150 of this chapter, if furnished by an ICF. ICF-type services are not covered under the Medicare program.

(5) *Ancillary services.* Ancillary services or special services are the services for which charges are customarily made in addition to routine services.

(6) *Charges.* Charges refer to the regular rates for various services which are charged to both beneficiaries and other paying patients who receive the services. Implicit in the use of charges as the basis for apportionment is the objective that charges for services be related to the cost of the services.

(7) *Average cost per diem for general routine services*—(i) *Average cost per diem for routine services: for cost reporting periods beginning before October 1, 1982.* The average cost per diem for general routine services for cost reporting periods beginning before October 1, 1982, means the amount computed by dividing the total allowable inpatient cost for routine services (excluding the cost of services provided in intensive care units, coronary care units, and other intensive care type inpatient hospital units as well as nursery costs) by the total number of inpatient days of care (excluding days of care in intensive care units, coronary care units and other intensive care type inpatient hospital units and newborn days) rendered by the provider in the accounting period.

(ii) *Average cost per diem for general routine services: for cost reporting periods beginning on or after October 1, 1982.* The average cost per diem for general routine services for cost reporting periods beginning on or after October 1, 1982, subject to the provisions on swing bed hospitals, means the average cost of general routine services net of the private room cost differential. The average cost per diem is computed by the following methodology:

(A) Determine the total private room cost differential by multiplying the average per diem cost differential determined in paragraph (d)(13) of this section by the total number of private room patient days.

(B) Determine the total inpatient general routine service costs net of the total private room cost differential by subtracting the total private room cost differential determined in paragraph (d)(7)(ii)(A) from total inpatient general routine service costs.

(C) Determine the average cost per diem by dividing the total inpatient general routine service cost net of private room cost differential determined in paragraph (d)(7)(ii)(B) by all inpatient general routine days, including total private room days.

(8) *Ratio of beneficiary charges to total charges on a departmental basis.* Ratio of beneficiary charges to total charges on a departmental basis, as applied to inpatients, means the ratio of inpatient charges to beneficiaries of the health insurance program for services of a revenue-producing department or center to the inpatient charges to all inpatients for that center during an accounting period. After each revenue-producing center's ratio is determined, the cost of services rendered to beneficiaries of the health insurance program is computed by applying the individual ratio for the center to the cost of the related center for the period.

(9) *Average cost per diem for routine services.*

(i) *Average cost per diem for routine services; general principle.* The average cost per diem for general routine services means the amount computed by dividing the total allowable inpatient cost or routine services (excluding the cost of services provided in intensive care units, coronary care units, and other intensive care type inpatient hospital units as well as nursery costs) by the total number of inpatient days of care excluding days of care in intensive care units, coronary care units, and other intensive care type inpatient (hospital units and newborn days) rendered by the provider in the accounting period.

(ii) *Average cost per diem for inpatient general routine hospital services in swing-bed hospitals.* The average cost per diem for inpatient general routine hospital services in swing-bed hospitals means the amount computed by (A) subtracting the costs attributable to SNF-type and ICF-type services from the total allowable inpatient cost for routine services (excluding the cost of services provided in intensive care units, coronary care units, and other intensive care type inpatient hospital units, and nursery costs), and (B) dividing the remainder by the total number of inpatient hospital days of care (excluding SNF-type and ICF-type days of care, days of care in intensive care units, coronary care units, and other intensive care type inpatient hospital units, and newborn days) furnished by the provider in the accounting period.

(10) *Average cost per diem for hospital intensive care type units.* Average cost per diem for intensive care units, coronary care units; and other intensive care type inpatient hospital units as defined in paragraph (d)(12) of this section means the amount computed by dividing the total allowable costs for routine services in each (see paragraph (b)(1) of this section), or the aggregate (see paragraph (b)(2) of this section), of these units by the total number of inpatient days of care rendered in each or the aggregate of these units.

(11) *Ratio of beneficiary charges for ancillary services to total charges for ancillary services.* With respect to cost reporting years starting before January 1, 1972, the ratio of beneficiary charges for ancillary services to total charges for ancillary services, as applied to inpatients, means the ratio of the total inpatient charges for covered ancillary services rendered to beneficiaries of the health insurance program to the total inpatient charges for ancillary services to all patients during an accounting period. This ratio is applied to the allowable inpatient ancillary costs for the period to determine the amount of reimbursement to a provider for the

covered ancillary services rendered to beneficiaries. With respect to cost reporting periods starting after December 31, 1971, the ratio of beneficiary charges for ancillary services to total charges for ancillary services, as applied to inpatients, means the ratio of the total inpatient charges for covered ancillary services rendered to beneficiaries of the health insurance program to the total inpatient charges, excluding delivery room charges, for ancillary services to all patients during an accounting period. This ratio is applied to the allowable inpatient ancillary costs for the period, excluding delivery room costs, to determine the amount of reimbursement to a provider for the covered ancillary services rendered to beneficiaries.

(12) *Intensive care type inpatient hospital unit.* To be considered an intensive care type inpatient hospital unit, the unit must furnish services to critically ill patients. (Examples of intensive care type units include, but are not limited to, intensive care units, trauma units, coronary care units, pulmonary care units, and burn units. Excluded as intensive care type units are postoperative recovery rooms, postanesthesia recovery rooms, maternity labor rooms, and subintensive or intermediate care units.) The unit must also meet the following conditions:

(i) The unit must be in a hospital;

(ii) The unit must be physically and identifiably separate from general routine patient care areas, including subintensive or intermediate care units, and ancillary service areas. There cannot be a concurrent sharing of nursing staff between an intensive care type unit and units or areas furnishing different levels or types of care. However, two or more intensive care type units that concurrently share nursing staff can be reimbursed as one combined intensive care type unit if all other criteria are met. Float nurses (nurses who work in different units on an as-needed basis) can be utilized in the intensive care type unit. If a float nurse works in two different units during the same eight hour shift, then the costs must be allocated to the appropriate units depending upon the time spent in those units. The hospital must maintain adequate records to support the allocation. If such records are not available, then the costs must be allocated to the general routine services costs areas;

(iii) There must be specific written policies that include criteria for admission to, and discharge from, the unit;

(iv) Registered nursing care must be furnished on a continuous 24-hour basis. At least one registered nurse must be present in the unit at all times;

(v) A minimum nurse-patient ratio of one nurse to two patients per patient day must be maintained. Included in the calculation of this nurse/patient ratio are registered nurses, licensed vocational nurses, licensed practical nurses, and nursing assistants who provide patient care. Not included are general support personnel such as ward clerks, custodians and housekeeping personnel; and

(vi) The unit must be equipped, or have available for immediate use, lifesaving equipment necessary to treat the critically ill patients for which it is designed. This equipment may include, but is not limited to, respiratory and cardiac monitoring equipment, respirators, cardiac defibrillators, and wall or canister oxygen and compressed air.

(13) *Average per diem private room cost differential.* (i) Average per diem private room cost differential means the difference in the average per diem cost of furnishing routine services in a private room and in a semi-private room (This differential is not applicable to hospital intensive care type units.)

(ii) To compute the average per diem private room cost differential:

(A) Determine the average per diem private room charge differential by subtracting the average per diem charge for all semi-private room accommodations from the average per diem charge for all private room accommodations. The average per diem charge for private room accommodations is determined by dividing the total charges for private room accommodations by the total number of days of care furnished in private room accommodations. The average per diem charge for semi-private accommodations is determined by dividing the total charges for semi-private room accommodations by the total number of days of care furnished in semi-private accommodations.

(B) Determine the inpatient general routine cost/charge ratio by dividing total inpatient general routine service cost by the total inpatient general routine service charges.

(C) Determine the average per diem private room cost differential by multiplying the average per diem private room charge differential determined in paragraph (d)(13)(ii)(A) by the ratio determined in paragraph (d)(13)(ii)(B).

(Catalog of Domestic Assistance Program No. 13.773, Medicare-Hospital Insurance)

Dated: December 23, 1982.

**Carolyne K. Davis,**

*Administrator, Health Care Financing Administration.*

Approved: January 18, 1983.

**Richard S. Schweiker,**

*Secretary.*

[FR Doc. 83-3116 Filed 2-7-83; 4:39 pm]

BILLING CODE 4120-03-M

## DEPARTMENT OF THE INTERIOR

### Bureau of Land Management

### 43 CFR Public Land Order 6347

[OR-19147]

### Oregon; Public Land Order No. 6006; Correction

**AGENCY:** Bureau of Land Management, Interior.

**ACTION:** Public Land Order.

**SUMMARY:** This order will correct an error in the heading of Public Land Order No. 6006 of September 23, 1981, which cites Powersite Restoration No. 726 instead of Powersite Cancellation No. 317.

**EFFECTIVE DATE:** February 10, 1983.

**FOR FURTHER INFORMATION CONTACT:** Champ C. Vaughan, Jr., Oregon State Office, 503-231-6905.

**SUPPLEMENTARY INFORMATION:** By virtue of the authority vested in the Secretary of the Interior by Section 204 of the Federal Land Policy and Management Act of 1976, 90 Stat. 2751; 43 U.S.C. 1714, it is ordered as follows:

The heading in Public Land Order No. 6006 of September 23, 1981, in FR Doc. 81-28749 in the issue of Friday, October 2, 1981, at page 48676, column two which reads "Oregon; Powersite Restoration No. 726" is hereby corrected to read "Oregon; Powersite Cancellation No. 317."

January 31, 1983.

**Garrey E. Carruthers,**

*Assistant Secretary of the Interior.*

[FR Doc. 83-3632 Filed 2-9-83; 8:45 am]

BILLING CODE 4310-84-M

### 43 CFR Public Land Order 6348

[OR-19010, OR-19095, OR-19099, OR-19139]

### Oregon; Public Land Order No. 6305; Correction

**AGENCY:** Bureau of Land Management, Interior.

**ACTION:** Public Land Order.

**SUMMARY:** This order will correct an error in the heading of Public Land Order No. 6305 of July 19, 1982, in which the Powersite Cancellation No. 356 citation was omitted.

**EFFECTIVE DATE:** February 10, 1983.

**FOR FURTHER INFORMATION CONTACT:** Champ C. Vaughan, Jr., Oregon State Office, 503-231-6905.

**SUPPLEMENTARY INFORMATION:** By virtue of the authority vested in the Secretary of the Interior by Section 204 of the Federal Land Policy and Management Act of 1976, 90 Stat. 2751; 43 U.S.C. 1714, it is ordered as follows:

The heading in Public Land Order No. 6305 of July 19, 1982, in FR Doc. 82-20263 in the issue of Tuesday, July 27, 1982, at page 32425, column two which reads "Oregon; Powersite Restoration No. 771" is hereby corrected to read "Oregon; Powersite Cancellation No. 356; Powersite Restoration No. 771."

**Garrey E. Carruthers,**

*Assistant Secretary of the Interior.*

January 31, 1983.

[FR Doc. 83-3633 Filed 2-9-83; 8:45 am]

BILLING CODE 4310-84-M

## 43 CFR Public Land Order 6349

[OR-20407]

## Oregon; Public Land Order No. 6286; Correction

**AGENCY:** Bureau of Land Management, Interior.

**ACTION:** Public Land Order.

**SUMMARY:** This order will correct an error in the land description of Public Land Order No. 6286 of June 16, 1982.

**EFFECTIVE DATE:** February 10, 1983.

**FOR FURTHER INFORMATION CONTACT:** Champ C. Vaughan, Jr., Oregon State Office, 503-231-6905.

**SUPPLEMENTARY INFORMATION:** By virtue of the authority vested in the Secretary of the Interior by Section 204 of the Federal Land Policy and Management Act of 1976, 90 Stat. 2751; 43 U.S.C. 1714, it is ordered as follows:

The land description in Public Land Order No. 6286 of June 16, 1982, in FR Doc. 82-17078 published at page 27291, in the issue of Thursday, June 24, 1982, is corrected as follows:

On page 27291, under T. 21 S., R. 10 E., the line reading "sec. 24, W½SE¼NW¼," should read "sec. 24, W½SW¼NW¼."

**Garrey E. Carruthers,**

*Assistant Secretary of the Interior.*

January 31, 1983.

[FR Doc. 83-3634 Filed 2-9-83; 8:45 am]

BILLING CODE 4310-84-M

## 43 CFR Public Land Order 6350

[OR-19062]

## Oregon; Public Land Order No. 6111; Correction

**AGENCY:** Bureau of Land Management, Interior.

**ACTION:** Public Land Order.

**SUMMARY:** This order will correct errors in the land description and acreage in Public Land Order No. 6111 of January 28, 1982.

**EFFECTIVE DATE:** February 10, 1983.

**FOR FURTHER INFORMATION CONTACT:** Champ C. Vaughan, Jr., Oregon State Office, 503-231-6905.

**SUPPLEMENTARY INFORMATION:** By virtue of the authority vested in the Secretary of the Interior by Section 204 of the Federal Land Policy and Management Act of 1976, 90 Stat. 2751; 43 U.S.C. 1714, it is ordered as follows:

The Public Land Order No. 6111 of January 28, 1982, in FR Doc. 82-3063 published at pages 5419-5420, in the issue of Friday, February 5, 1982, is corrected as follows: In the second line of the Summary on page 5419, and in the second line following the land description on page 5420, the acreage reading "approximately 42,917.83 acres" should read "approximately 42,957.83 acres."

On page 5419, under T. 9 S., R. 9 E., the line reading "sec. 36, NW¼NE¼," should read "sec. 36, NW¼NW¼". On page 5420, under T. 9 S., R. 11 E., "sec. 14, SW¼NW¼", should read "sec. 14, SE¼NW¼".

**Garrey E. Carruthers,**

*Assistant Secretary of the Interior.*

January 31, 1983.

[FR Doc. 83-3635 Filed 2-9-83; 8:45 am]

BILLING CODE 4310-84-M

# DEPARTMENT OF TRANSPORTATION

## Coast Guard

## 46 CFR Part 401

[CGD 82-108]

## Great Lakes Pilotage Rates

**AGENCY:** Coast Guard, DOT.

**ACTION:** Final rule.

**SUMMARY:** This rule will amend the Great Lakes Pilotage Regulations. These amendments increase the basic pilotage rates by six percent in the U.S. Great Lakes pilotage system. These changes are made in order to increase the revenue received by the pilot organizations so that they may cover their increased operating costs.

**EFFECTIVE DATE:** March 15, 1983.

**FOR FURTHER INFORMATION CONTACT:** Mr. John J. Hartke (G-MVP-4/14), Room 1400, Department of Transportation, Coast Guard Headquarters, 2100 Second Street, SW., Washington, D.C. 20593. (202) 426-2985.

**SUPPLEMENTARY INFORMATION:** The United States and Canada entered into a Memorandum of Arrangements regarding Great Lakes Pilotage (1977 being the most recent version) which incorporates, among other things, the provisions for the establishment and adjustment of joint or identical pilotage rates. The U.S. Coast Guard and the Canadian Great Lakes Pilotage Authority, Ltd, have agreed to a joint identical six percent rate increase to be implemented prior to the commencement of the 1983 navigation season on the Great Lakes. Under the "foreign affairs" exception of the Administrative Procedures Act (5 U.S.C. 553(a)(1)), a Notice of Proposed Rulemaking is not required. As this rate adjustment involves a foreign affairs function, only a Final Rule will be published setting forth the provisions of the agreed to six percent rate increase in Great Lakes Pilotage Rates.

The Coast Guard has completed a review of revenues earned and expenses incurred by the three U.S. Great Lakes pilot organizations during 1982. Revenue requirements for 1983 have been developed and the number of vessels, their size, and route patterns have been projected for 1983.

U.S. pilots are private entrepreneurs, and as such, they must price their services so as to recover the costs of providing that service. Because of the increases in the cost of doing business to the pilot associations (pilot boat operations, pilot travel, administration, and pilot training), the rates that the pilots charge for their services are increased by six percent.

While traffic has decreased, the costs of providing pilotage services have not because many of the pilot associations' costs are fixed costs. Pilot boats and dispatching facilities must continue to be maintained and staffed regardless of the traffic level. Pilot travel has not decreased as might be expected with less traffic. With reduced traffic levels, turnaround time is longer. Pilots who would normally take another ship from the location of their last assignment must now either remain in hotels longer or be transferred to different locations via commercial transportation. Having a pilot at the proper location at the proper time now becomes relatively more expensive.

In an effort to deal with increasing costs and declining revenues, the pilot associations have taken steps wherever possible, including further reducing the number of pilots on their rolls.

**Evaluation**

Although Executive Order 12291 does not apply to this regulation under the foreign affairs exception, the Coast Guard has nevertheless reviewed this regulation and has determined it to be non-major. This regulation is considered to be nonsignificant and, although not required, a regulatory evaluation has been prepared under the Policies and Procedures for Simplification, Analysis, and Review of Regulations (DOT Order 2100.5 dtd 5-22-80). The DOT Order requires that each draft evaluation include an economic analysis which quantifies, to the extent practicable, the estimated cost of the regulations to the private sector, consumers, and Federal, State, and local governments, as well as the anticipated benefits and impacts of the regulations. The estimated cost of this rule is $412,000. This figure is the amount of additional revenue the U.S. pilots should receive under this regulation based on the projected 1983 traffic and is the increased amount that shippers would have to pay for pilotage services on the Great Lakes. The benefit of this rule is the value of avoiding or minimizing costly delays and disruptions in shipping attributable to the failure to retain qualified pilots and to attract new qualified pilots. The overall efficiency of the pilotage system is enhanced by having an appropriate number of pilots available to provide the required services. The regulatory evaluation from which this information is taken has been included in the public docket and can be obtained from the Marine Safety Council (G-CMC/44) (CGD 77-084), U.S. Coast Guard, Washington, D.C. 20593.

The Regulatory Flexibility Act of 1980 (Pub. L. 96-354, 94 Stat. 1164) requires an initial regulatory flexibility analysis for regulations having a significant economic impact on a substantial number of small entities. The pilotage fees in question account for less than five percent of the total shipping cost and will not have a significant impact on the shipping industry. Pursuant to section 605(b) of the Act, it is certified that this regulation will not have a significant economic impact on a substantial number of small entities.

In the development of this rate adjustment, U.S. and Canadian shipping associations and pilots organizations were consulted.

**Drafting Information**

The principal persons involved in drafting this rule are: John J. Hartke, Project Manager, Office of Merchant Marine Safety, and Lieutenant Commander William B. Short, Project Attorney, Office of the Chief Counsel.

**List of Subjects in 46 CFR Part 401**

Administrative practice and procedure, Great Lakes, Navigation (water), Reporting and recordkeeping requirements, Seamen.

## PART 401—[AMENDED]

In consideration of the foregoing, Part 401 of Title 46 of the Code of Federal Regulations is amended as follows:

1. Section 401.405 is revised to read as follow:

**§ 401.405 Basic rates and charges on designated waters.**

Except as provided under § 401.420, the following basic rates shall be payable for all services and assignments performed by U.S. Registered Pilots in the areas described in § 401.300.

(a) District 1:

(1) For passage through the District or any part thereof, $8.36 for each statute mile, plus $111 for each lock transited, but with a minimum basic rate of $244 and a maximum basic rate for a through trip of $1071.

(2) For a movage in any harbor, $368.

(b) District 2:

(1) Southeast Shoal to Toledo or any point on Lake Erie west of Southeast Shoal, $570.

(2) Between points on Lake Erie west of Southeast Shoal, $337.

(3) Southeast Shoal to Port Huron Change Point or any point on the St. Clair River when pilots are not changed at Detroit Pilot Boat, $993.

(4) Southeast Shoal to Detroit/Windsor or any point on the Detroit River, $570.

(5) Southeast Shoal to Detroit Pilot Boat, $413.

(6) Toledo or any point on Lake Erie west of Southeast Shoal to Port Huron Change Point, when pilots are not changed at Detroit Pilot Boat, $1151.

(7) Toledo or any point on Lake Erie west of Southeast Shoal to Detroit/Windsor or any point on the Detroit River, $741.

(8) Toledo or any point on Lake Erie west of Southeast Shoal to the Detroit Pilot Boat, $570.

(9) Detroit/Windsor to any point on the Detroit River and between points on the Detroit River, $337.

(10) Detroit/Windsor or any point on the Detroit River to Port Huron Change Point or any point on the St. Clair River, $748.

(11) Detroit Pilot Boat to any point on the St. Clair River, $748.

(12) Detroit Pilot Boat to Port Huron Change Point, $581.

(13) Between points on the St. Clair River, $337.

(14) Port Huron Change Point to any point on the St. Clair River, $413.

(c) District 3:

(1) Between the southerly limit of the District and the northerly limit of the District or the Algoma Steel Corporation Wharf as Sault Ste. Marie, Ontario, $975.

(2) Between the southerly limit of the District and Sault Ste. Marie, Ontario or any point in Sault Ste. Marie, Ontario other than the Algoma Steel Corporation Wharf, $818.

(3) Between the northerly limit of the District and Sault Ste. Marie, Ontario, including the Algoma Steel Corporation Wharf, or Sault Ste. Marie, Michigan, $368.

(4) For movage in any harbor, $368.

2. Section 401.410 is revised to read as follows:

**§ 401.410 Basic rates and charges on undesignated waters.**

(a) Except as provided under § 401.420 and subject to paragraph (c) of this section the basic rates for each 6 hour period or part thereof that a U.S. pilot is on board in the undesignated waters shall be:

(1) In Lake Ontario, $197.

(2) In Lake Erie, $244.

(3) In Lakes Huron, Michigan and Superior, $197.

Each time a U.S. pilot performs the docking or undocking of a ship in undesignated waters there is an additional charge of $188.

(b) Between Buffalo and any point on the Niagara River below the Black Rock Lock, $479.

(c) When in direct transit of the undesignated waters of Lake Erie between Southeast Shoal and Port Colborne, or between Port Colborne and Southeast Shoal, and the vessel's master plans to use an appropriate certificate in lieu of a pilot, the ship shall pick up or discharge the pilot at the Cleveland pilot boat. No charge is to be made for the transit between Southeast Shoal and the Cleveland pilot boat or between the Cleveland pilot boat and Southeast Shoal unless the services of the pilot are utilized.

3. Section § 401.420 is revised to read as follows:

**§ 401.420 Cancellation, delay or interruption in rendition of services.**

(a) Except as provided in this paragraph, whenever the passage of a ship is interrupted and the services of a U.S. pilot are retained during the period of the interruption or when a U.S. pilot is detained on board a ship after the end of an assignment for the convenience of the ship, the ship shall pay an additional charge calculated on a basic rate of $31 for each hour or part of an hour during which each interruption lasts with a maximum basic rate of $488 for each continuous 24 hour period during which the interruption continues. There is no charge for an interruption caused by ice, weather, or traffic, except during the period beginning the 1st of December and ending on the 8th of the following April. No charge shall be made for an interruption if the total interruption ends during the 6 hour period for which a charge has been made under § 401.410.

(b) When the departure or movage of a ship for which a U.S. pilot has been ordered is delayed for the convenience of the ship for more than one hour after the U.S. pilot reports for duty at the designated boarding point or after the time for which the pilot is ordered, whichever is later, the ship shall pay an additional charge calculated on a basic rate of $31 for each hour or part of an hour including the first hour of the delay, with a maximum basic rate of $488 for each continuous 24 hour period of the delay.

(c) When a U.S. pilot reports for duty as ordered and the order is cancelled, the ship shall pay:

(1) A cancellation charge calculated on a basic rate of $184;

(2) A charge for reasonable travel expenses if the cancellation occurs after the pilot has commenced travel; and

(3) If the cancellation is more than one hour after the pilot reports for duty at the designated boarding point or after the time for which the pilot is ordered, whichever is later, a charge calculated on a basic rate of $31 for each hour or part of an hour including the first hour, with a maximum basic rate of $488 for each 24 hour period.

4. Section § 401.428 is revised to read as follows:

**§ 401.428 Basic rates and charges for carrying a U.S. pilot beyond normal change point or for boarding at other than the normal boarding point.**

If a U.S. pilot is carried beyond the normal change point or is unable to board at the normal boarding point the pilot shall be paid at the rate of $188 per day or part thereof, plus reasonable travel expenses to or from the pilot's base. These charges are not applicable if the ship utilizes the services of the pilot beyond the normal change point and the ship is billed for those services. The change points to which this section applies are designated in § 401.450.

(Sec. 5, 74 Stat. 260 (45 U.S.C. 216c); Sec. 6(a)(4), 80 Stat. 937, as amended (49 U.S.C. 1655(a)(4); 49 CFR 1.46(d); 5 U.S.C. 553(a)(1))

Dated: January 31, 1983.

**Clyde T. Lusk, Jr.,**

*Rear Admiral, U.S. Coast Guard, Chief, Office of Merchant Marine Safety.*

[FR Doc. 83-3608 Filed 2-9-83; 8:45 am]

BILLING CODE 4910-14-M

---

## FEDERAL COMMUNICATIONS COMMISSION

## 47 CFR Part 64

**[FCC 82-580]**

## American Telephone & Telegraph Co; Organization for the Use of the Telephone; Petitions for Waiver of the Commission's Rules so That the Bell Operating Companies and Other Local Telephone Companies May Provide Under Tariff New CPE To Meet the Needs of Disabled Persons

**AGENCY:** Federal Communications Commission.

**ACTION:** Order granting petitions for waiver.

**SUMMARY:** Commission grants waiver of § 64.702 of the Commission's Rules, which requires that new customer premises equipment be detariffed as of January 1, 1983. The Commission grants the Waiver pursuant to a requirement in the Telecommunications for the Disabled Act of 1982. The action permits, but does not require, all telephone companies to provide under tariff specialized equipment needed by disabled persons to communicate. The waiver also permits the Bell Operating Companies to offer such customer premises equipment without the need to form a separate subsidiary. The waiver is granted on an interim basis until final rules are issued pursuant to a future rulemaking proceeding the Act requires the Commission to conduct.

**EFFECTIVE DATE:** December 22, 1982.

**FOR FURTHER INFORMATION CONTACT:** Gregory J. Vogt, Enforcement Division, Common Carrier Bureau, Federal Communications Commission, Washington, D.C., 20554. Telephone No. (202) 632-4890.

**SUPPLEMENTARY INFORMATION:**

### List of Subjects in 47 CFR Part 64

Civil defense, Claims, Communications common carriers, Computer technology, Credit, Foreign relations, Political candidates, Radio, Telegraph, Telephone.

In the matter of American Telephone & Telegraph Company; Organization for the use of the telephone; petitions for Waiver of § 64.702 of the Commission's rules so that the Bell Operating Companies and other local telephone companies may provide under tariff new CPE to meet the needs of disabled persons.

### Memorandum Opinion and Order

Adopted December 22, 1982.
Released January 25, 1983.

### I. Introduction

#### *A. Background*

1. In the Second Computer Inquiry (Computer II) [1] the Commission concluded that, as of January 1, 1983, all common carriers must provide new customer premises equipment (CPE) only on a detariffed basis.[2] "Embedded" CPE, i.e., CPE on a customer's premises or in inventory as of January 1, 1983, may continue to be offered under tariff until the manner of its detariffing is determined in the *Implementation Proceeding*, CC Docket No. 81-893.

2. AT&T and its affiliates may sell new CPE only through a separate subsidiary once the Commission has approved the form of the capitalization requested for the subsidiary. On November 4, 1982, we approved, with modifications, AT&T's capitalization plan for the provision of new CPE by American Bell, Inc. (AmBell). *CPE Capitalization Order*, FCC 82-496, released November 10, 1982. AT&T has designated AmBell as the Bell System provider of new CPE to domestic end users.[3] All common carriers other than

---

[1] Second Computer Inquiry (*Final Decision*), 77 FCC 2d 384, *recon.*, 84 FCC 2d 50 (1980) (*Reconsideration*), *recon.*, 88 FCC 2d 512 (1981) (*Further Reconsideration*), *aff'd sub non. Computer and Communications Industry Association* v. *FCC*, No. 80-1471 (D.C. Cir. November 12, 1982).

[2] "New CPE" is customer premises equipment which is neither in inventory nor subject to the jurisdictional separations process, and is offered to customers after January 1, 1983. *Reconsideration*, 84 FCC 2d 50, 66-67 (1980); *Order on Further Reconsideration*, 88 FCC 2d 512, 525-27 (1981). CPE "includes all equipment provided by common carriers and located on customer premises except over voltage protection equipment, inside wiring, coin operated or pay telephone and multiplexing equipment to deliver multiple channels to the customers." *Reconsideration*, at 61 n. 10.

[3] In accord with the Consent Decree entered by Judge Greene in United States v. Western Electric, No. 74-1698 (D.D.C., August 24, 1982), the BOCs will be allowed to market new CPE after their divestiture, although whether they will be required to form separate subsidiaries pursuant to § 64.702 of the Commission's Rules has not yet been determined. *See* Petition for Declaratory Ruling filed

AT&T and its affiliates must keep books of account and records for the provision of new CPE separate from regulated records. Under the Computer II rules, these carriers are not required to form separate subsidiaries for the offering of CPE.

*B. Petitions for Waiver*

3. Two petitions for waiver have been filed which deal with similar subject matter, one by AT&T and one by the Organization for the Use of the Telephone (OUT). On October 22, 1982, AT&T filed a petition for waiver of the Computer II rules to permit the Bell Operating Companies (BOCs) to provide new CPE, under tariff, to meet the special needs of the disabled. AT&T seeks the waiver only on an interim basis until embedded CPE is detariffed pursuant to the *Implementation Proceeding*. Thereafter, AT&T states, AmBell will assume the BOC's responsibilities with respect to the provision of CPE for the disabled.

4. AT&T contends that a single point of contact within its operating companies is necessary to meet the requirements of the disabled for both communications service and equipment. Without the instant waiver, AT&T argues, a BOC may be unable to respond fully to a request from a disabled person because its embedded inventory is limited. Rather, the customer would have to be referred elsewhere, complicating and delaying the resolution of the disabled person's telecommunications problem. Those complications would be particularly problematic, AT&T contends, where "special assemblies," i.e., reconfigured arrangements of terminal equipment, must be assembled in a customized fashion to meet the needs of a particular customer. Furthermore, AT&T represents that persons presently employed at the BOCs have specialized knowledge necessary to resolve the unique telecommunications problems of the disabled.

5. AT&T states that the instant waiver would not adversely affect the Commission's bifurcation approach to deregulating CPE or adversely affect either ratepayers or AT&T's competitors. AT&T states that only sixty thousand orders are received yearly for equipment to meet the needs of the disabled, whereas several million requests are received annually for all types of CPE. AT&T limits its waiver request to equipment which is required to meet the special needs of the disabled. AT&T proposes to use a "self-certification" method to assure that only the disabled use the BOCs to secure both communications services and equipment. In other words, if customers state that they are disabled, appropriate equipment will be provided. AT&T states that such a self-certification approach works well in the context of other programs, *e.g.*, directory assistance charge plans where persons who are disabled are not charged for assistance if they identify themselves as disabled.

6. OUT filed a petition for waiver on November 5, 1982 on behalf of all independent telephone companies to extend AT&T's petition for waiver of Computer II to permit all independent telephone companies to provide new CPE under tariff to meet the needs of the disabled. OUT sought this waiver on a permanent, rather than on an interim, basis. OUT argued that, because there is ineffective competition in the market for CPE for the disabled, the disabled would be deprived of communications equipment at reasonable prices absent the grant of the waiver. In addition, OUT suggested that, with equipment for the disabled, we are improperly using our authority to preempt state action, contrary to our decisions and in violation of the Communications Act of 1934.

*C. Comments of the Interested Parties*

7. The issues involved with AT&T's and OUT's waiver petitions are similar. Therefore, all comments received will be deemed to have been filed with respect to both petitions. Generally, the commenting parties support AT&T's and OUT's petitions for waiver. The comments received are from The Michigan Public Service Commission (Michigan), the American Speech-Language-Hearing Association, the Communications Workers of America (CWA), General Telephone & Electric, Co. (GTE), National Association of Regulatory Commissioners (NARUC), California Association of the Deaf, Krown Research, Inc. and a joint comment filed by Crest Industries, Inc., Tone Commander Systems, Inc. and Valcom Corp. (hereinafter Crest Comments). Letters received from the American Deafness and Rehabilitation Assocation and Joseph B. Szczepaniak III supporting AT&T's waiver request will be treated as informal comments.

8. NARUC and Michigan stated that they oppose AT&T's petition only insofar as the petition requests a waiver on an interim basis. They believe that a permanent waiver of Computer II should be granted to permit the continued tariffing of equipment for the disabled.

9. GTE believes that there is no need to permit the BOCs to offer detariffed equipment for the disabled under tariff. GTE would rather the Commission waive Computer II only insofar as it requires the BOCs to offer equipment for the disabled through a separate subsidiary. In comments filed with respect to OUT's petition, GTE saw no reason for a waiver to be filed on behalf of independent telephone companies since they presently are not required to form a separate subsidiary for the offering of any new CPE.

10. United Telephone System, Inc. (UTS) and Centel Corp. (Centel) also argue that the continued tariffing of CPE for the disabled is unnecessary. UTS and Centel state that a competitive market will best serve the needs of the disabled.

11. The Crest Comments, in addition to approving of AT&T's waiver petition, ask the Commission, *sua sponte*, to broaden the waiver request to include "specific product markets and geographical areas and . . . customer classes which the individual BOCs determine would not be adequately served either by American Bell or by competing providers of CPE products and services." Crest Comments at 2. The comments request that the BOCs be permitted to offer such equipment under tariff.[4]

12. In reply comments filed with respect to OUT's petition, AT&T contends that the Commission should not grant the waiver on a permanent basis. AT&T argues that there is no need in this proceeding to consider whether any waiver should be permanent and that any long term needs of disabled persons for CPE can be met by a competitive marketplace.

**II. Discussion**

13. On January 3, 1983 Pub. L. 97–410, the Telecommunications for the Disabled Act of 1982, was enacted. Among the provisions of that bill, section 610(g) is added to the Communications Act of 1934. Section 610(g) provides:

> Any common carrier or connecting carrier may provide specialized terminal equipment needed by persons whose hearing, speech, vision, or mobility is impaired. The State commission may allow the carrier to recover in its tariffs for regulated service reasonable

on November 30, 1982 by North American Telephone Association seeking a ruling as to whether the BOCs, following their divestiture, will be subject to the Computer II separation requirements.

[4] The expansion of AT&T's waiver which the Crest Comments seek raises different issues from those involved with the provision of CPE to meet the needs of the disabled. Therefore, we decline the request to expand the present proceeding beyond the issues involved in AT&T's and OUT's petitions.

and prudent costs not charged directly to users of such equipment.

That section in effect requires an amendment to Computer II to permit all carriers to provide "specialized equipment needed by persons whose hearing, speech, vision, or mobility is impaired."

14. The Act also provides that, under rules to be adopted by the Commission within one year, state commissions have authority to permit carriers to recover the reasonable costs of providing specialized equipment needed by disabled persons from basic service ratepayers. The act itself does not define the term, "specialized equipment" needed by disabled persons. The legislative history of the Act includes within that term not only equipment specifically designed for use by the disabled, but also some optional features, such as speakerphones, which are also useful to other persons. *See* H. Rep. 97-888, 97th Cong., 2d Sess., at 13 (1982) (H. Rep.). During the course of the debate on this legislation, the sponsor of the bill stated that the Commission has the discretion to define the term "specialized equipment" needed by the disabled. 128 Cong. Rec. H9484 (Daily Ed., December 13, 1982).

15. We will not attempt at this point to define in detail the term "specialized equipment" needed by disabled persons. Rather, we shall address this issue within the context of the rulemaking proceeding we are required to conduct pursuant to the terms of the Act.[5] Nonetheless, prior to reaching a decision in that rulemaking proceeding, some guidance would, we believe, be helpful. The term "specialized equipment" obviously includes equipment which is specially designed for use by a person with a speech, hearing, sight or mobility impairment. Examples of such equipment are amplified hearing handsets and teletypewriters for the deaf. On the other hand, it would appear clear from the legislative history of the Disabled Act that basic equipment such as push button telephones or telephones with lighted dials which may be incidentally useful to disabled persons clearly does not fall within the intended meaning of "specialized equipment." Between these two extremes exists equipment which can be used both by the population at large and by disabled persons. Whether or not particular equipment is within the meaning of the Act can best be decided on a case-by-case basis pursuant to standards defined in the rulemaking proceeding conducted pursuant to the Act. Until a decision is reached in the rulemaking proceeding, the term "specialized equipment" for the disabled shall include CPE which has as at least one of its important purposes specialized application enabling disabled persons to communicate. The House Report uses as an example of equipment within this category speakerphones for those with impaired mobility. We also find that the term "specialized equipment" includes "special assemblies" which comprise special configurations of CPE to meet the telecommunications needs of a disabled customer.

16. Before addressing the changes required by the legislation, we also believe it appropriate to consider whether some accommodations should be made under our Computer II rules to allow any telephone company to provide advice and assistance to disabled or hearing impaired persons with respect to the availability of various CPE configurations that may be used by such persons. In general, the Computer II decisions establish the principle that the vision of CPE is not a common carrier communications service. As such, activities associated with the marketing and vision of such equipment are to be conducted separate from the provision of local exchange service.[6] AT&T must do this through a separate subsidiary. States are precluded from requiring local carriers to undertake any activity which is inconsistent with our Computer II determinations. To the extent that the BOCs provide disabled persons with information concerning new CPE, this could be construed as prohibited by virtue of the structural separation requirement for marketing new CPE. We conclude, however, that a limited exception should be made whereby the BOCs are not precluded from advising or otherwise informing disabled persons as to the availability of specialized CPE, or CPE components, vendors of such equipment, and prices charged in the marketplace for such equipment.

17. Bell System carriers currently have a centralized contact point where disabled persons can obtain information concerning the availability of specialized CPE. We do not believe that Computer II should be construed to preclude any telephone company from disseminating information concerning CPE that may be of utility to disabled persons, or to otherwise preclude states from requiring local telephone companies to maintain this public service. We conclude, therefore, that our Computer II decision does not preclude this activity on the part of any carrier, including the BOCs.

18. The Telecommunications for the Disabled Act of 1982 requires that we alter two aspects of the Computer II decisions until a final decision has been reached in the required rulemaking proceeding. First, Section 610(g) requires that we permit carriers to provide specialized equipment needed by disabled persons. Presently, the BOCs may not offer any new CPE because they have not formed separate subsidiaries as required by the Computer II rules. Because adherence to the structural separations requirements would effectively prohibit the BOCs from providing specialized equipment needed by disabled persons, we will waive the Computer II separation requirement with respect to the provision of specialized CPE needed by disabled persons.

19. The second change required in the interim is to permit carriers to provide specialized equipment needed by disabled persons under tariff. The Act itself is silent on the question of whether or not this CPE may be tariffed. However, the legislative history states that "As a result of this legislation, it will be permissible to offer such equipment under tariff or on a deregulated basis * * * ." H. Rep. at 14 (emphasis added). The choice of whether to tariff or not tariff thus appears to rest, at least in the first instance, with the carrier. Accordingly, we are granting a waiver to the extent that we shall not preclude the BOCs or any other telephone company from offering such CPE on a tariffed basis. In taking this action we do not decide whether new CPE for the disabled shall in fact be offered under tariff or be required by states to be offered under tariff.[7] We are merely carving out a limited exception to a federal mandate that requires new CPE to be offered on a nontariffed basis consistent with the terms of legislation.

[5] The statutorily mandated rulemaking proceeding requires that we address additional issues. Those issues will be announced in the Notice of Proposed Rulemaking to be issued in the near future.

[6] This applies to new CPE as of January 1, 1983. We are addressing the manner and timing for the detariffing of embedded CPE in the *Implementation Proceeding*.

[7] The legislative history to the Act is unclear as to whether we must permit state commissions to force carriers to offer under tariff specialized equipment needed by disabled persons. The House Report reads in relevant part:

In light of the record of voluntary cooperation by the industry, the Committee found it unnecessary specifically to address the possibility of a "recalcitrant carrier" that might decline to participate in a gram of subsidized offerings sanctioned by the State Commission * * * . These matters may be considered, if necessary, in formulating the required modifications to *Computer II*.

20. Finally, as mentioned above, AT&T has proposed to adopt a "self-certification" gram pursuant to which it will provide specialized equipment to persons who say that they are disabled. At this point we take no position as to whether the arrangement is satisfactory or whether additional verification can or should be required. Until we can address this matter further in the rulemaking mandated by the Disabled Act, we leave it to state commissions to decide whether or not AT&T's self-certification approach is satisfactory.

### III. Ordering Clause

21. Accordingly, it is ordered that pursuant to sections 4(i), 4(j) and 610 of the Communications Act of 1934 a waiver of Section 64.702 of the Commission's Rules and Regulations, 47 CFR 64.702, is granted as follows:

1. The Bell Operating Companies may offer on an unseparated basis new specialized CPE needed by persons whose speech, hearing, sight or mobility is impaired.

2. All telephone companies may offer under tariff new specialized CPE needed by persons whose speech, hearing, sight or mobility is impaired.

Federal Communications Commission.

**William J. Tricarico,**

*Secretary.*

[FR Doc. 83-3415 Filed 2-9-83; 8:45 am]

BILLING CODE 6712-01-M

---

## 47 CFR Parts 81 and 83

**[Gen. Docket No. 81-656; FCC 83-5]**

## Stations on Land in the Maritime Services; Stations on Shipboard in the Maritime Services; Amendment To Redefine Classes of Coast Stations and Clarification of Rules Which Appear To Restrict the Free Use of Communication by Users

**AGENCY:** Federal Communications Commission.

**ACTION:** Final rule.

**SUMMARY:** The Commission's rules are inconsistent as to the definition of classes of stations, designated area of service and the frequency bands assigned to the station. These amendments will correct these inconsistencies and bring the rules and station licenses into agreement with the actual operation of the coast station. These amendments also delete certain rules which restrict the use of communications in frequency bands other than VHF. These rules were adopted when the short range communications system on VHF was first implemented to encourage all ship and coast stations to use VHF.

**EFFECTIVE DATE:** February 18, 1983.

**ADDRESS:** Federal Communications Commission, Washington, D.C. 20554.

**FOR FURTHER INFORMATION CONTACT:** Nicholas G. Bagnato, Private Radio Bureau (202) 632-7175.

**SUPPLEMENTARY INFORMATION:**

### List of Subjects

*47 CFR Part 81*

Coast station classification, Radio.

*47 CFR Part 83*

Telephone, Operational procedures.

### Report and Order (Proceeding Terminated)

Adopted: January 13, 1983.

Released: January 19, 1983.

In the matter of Amendment of Parts 22, 81 and 83 to redefine classes of coast stations and clarification of rules which appear to restrict the free use of communication by users; Gen Docket No. 81-656.

1. In this Report and Order we are: (1) Reclassifying coast stations according to the service they provide, in lieu of an alphanumeric label; (2) deleting the requirement to modify coast station licenses when the power of the transmitter is changed; and (3) removing the restrictions in frequency usage in areas with marine VHF coverage.

### Coast Station Reclassification

*Background*

2. Currently, there are inconsistencies in the definitions applied to medium frequency (MF) and high frequency (HF) assignments in Parts 81 and 83 of the rules (Maritime Services), and in Part 2 of the rules and the international Radio Regulations.[1] Further, there have been inconsistencies in the actual frequency assignments for particular coast stations. The practical effect of these inconsistencies has been the assignment of 4000 kHz band frequencies (i.e., HF band frequencies suitable for long range high seas communications) to Class II (MF) coast stations which are licensed to provide regional or medium range service.

3. Additionally, the present method of classifying coast stations is with a Roman numeral indicating the frequency band and operational range of the service authorized, followed by a letter indicating the mode (telegraphy/telephony) of operation. For example, a class II B coast station operates in the MF band, providing regional service of approximately 150 miles range utilizing voice communications. The station will be further classified as public, i.e., open to public correspondence, or limited, i.e., restricted to the operational and business communications of the licensee.

4. In the Notice of Proposed Rule Making (NPRM) in this proceeding [2] the Commission proposed to rectify the inconsistencies and clarify the rules by revising Parts 81 and 83 to define each class of coast station in terms of the frequency bands authorized and the area of coverage provided. With reference to the example above, a class II-B coast station would, under the proposed reclassification, become a "regional telephony coast station" serving ships at distance up to 150 nautical miles on assigned frequencies between 1605 and 3000 kHz.[3] We emphasize, that the proposed rule amendments are administrative in nature and do not change the operational parameters or specific frequency assignment of existing coast station.

*Comments*

5. Comments in this proceeding were filed by:

—Radiotelephone Communications of Puerto Rico, Inc. (RCPR).
—James G. Prestwood, Jr. d.b.a. Prestwood Communications (Prestwood).
—RadioCall Corporation and Standard Communications Corp. (RadioCall).
—Thomas W. Tittle d.b.a. Burns Harbor Radio (Burns Harbor)
—Verle Bogue d.b.a. Santa Cruz Telephone and Radio Service (SCATR).
—Northwest Instrument (Northwest).
—Marine Telephone Company (Marine Telephone).
—Mobile Marine Radio, Inc. (MMR).
—AMCON, Inc. (AMCOM).
—WJG Telephone Company (WJG).
—Marine Telephone and WJG also filed reply comments.[4]

---

[1] The international Radio Regulations and Part 2 of the rules define MF as extending from 300 to 3000 kHz and HF as extending from 3000 kHz to 30 MHz. Parts 81 and 83 apply MF and HF for radiotelephony to the bands between 1605 to 4000 kHz and 4000 to 23000 kHz, respectively.

[2] Gen. Docket No. 81-656, FCC 81-412, released October 1, 1981, 46 FR 49624.

[3] The NPRM incorrectly listed the upper band limit of Regional stations as 4000 kHz. However, there are no maritime mobile assignments for telegraphy or telephony between 3000 and 4000 kHz. Further, as noted above, the upper limit of the MF band is defined at 3000 kHz. This action is intended to remove such inconsistencies.

[4] Comments are listed in order of receipt.

6. Only MMR, AMCOM and WJG addressed the issue of coast station reclassification. MMR and AMCOM see no advantage to such a reclassification. They suggest retaining the alphanumeric labels and simply specifying the frequency bands assigned to the particular class I (high seas) and class II (regional) stations. Thus, continuing our example, a class II B station would become a class II station defined as having frequency assignments between 1605 and 4000 (5000) kHz. MMR and AMCOM believe that these designations are functional and serve the administrative purposes more efficiently than the proposed descriptive classifications. MMR also states that the descriptive classification could be confusing. For example, serving ships "at sea" might be interpreted as precluding serving ships in the Gulf of Mexico.[5]

7. MMR also notes that the proposal to correlate the classification of coast stations with the ITU frequency band definitions would result in MRR's 4 MHz radiotelephony service being changed from Class II to Class I. Since it concurs in AT&T's tariffs, the result would be a rate increase since class I service is currently more expensive than class II service. MMR asserts that filing its own tariff for 4 MHz would not preserve the status quo but would disturb its interconnect agreements. These interconnect agreements concern business arrangements between MMR and South Central Bell, including matters relating to billing and collection, settlement of accounts and all other carrier-to-carrier business relationships. MMR believes that it would be unlikely that it could maintain the present rate level for 4 MHz service since its costs would be significantly increased.

8. MMR states that historically 4 MHz frequencies have been assigned to both Class I and Class II stations. The 4 MHz frequencies were assigned to Class II stations as complementary, from a coverage viewpoint, to the MF band frequencies. MMR asserts that the Commission should continue to recognize this overlap in services of the 4 MHz frequencies as now assigned.

9. WJG originally supported the reclassification of coast stations as proposed. In its reply comments, however, WJG states that the range of the station should not be determined arbitrarily, but by the propagation range of the assigned frequencies. WJG proposes that the mileage limitation be deleted from the definition.[6]

*Discussion*

10. Since the three licensees who commented on the proposed reclassification essentially do not favor modifying the definitions of class I (high seas, HF) stations and class II (regional, MF) stations, a brief discussion of the background and rationale for the distinction between the classes of coast stations appears to be appropriate. The definitions of Class I, II and III stations were introduced into the rules by Docket 9797 adopted June 13, 1951. The definitions are based on area served (i.e. worldwide for class I, regional coverage for class II and local coverage for Class III) which was a function of the frequency bands available for assignment. The predecessor of the class II category was "coastal-harbor" classification. Coastal-harbor stations provided regional service in the 2000 to 3000 kHz band. However, due to congestion in the 2000 to 3000 kHz band, Docket 9797 permitted stations providing regional service to vessels off the coast of New England and Southern California to utilize frequencies in the 4000 to 5000 kHz band.

11. Thus, where 4 MHz frequencies have been made available for regional service, they have been supplemental to the coverage provided on assigned 2 MHz freqencies. The 4 MHz frequencies have been and will remain primarily available for high seas service.

12. As we indicated in the NPRM the proposed changes are administrative in nature. No station will be denied authority to operate on any assigned frequency as a result of this proceeding. Existing class II stations which now operate in the 4 MHz band as well as the 2 MHz band will simply be classified, at the time of license renewal, as providing high seas service in addition to regional service. However, where a coast station utilizes a 4 MHz frequency primarily to supplement its regional coverage on 2 MHz, and the coast station desires to include the 4 MHz assignment under its "regional coast station authorization," we will permit it to do so. Therefore, if MMR because of its particular tariff arrangements finds it more appropriate to retain its 4 MHz assignment under a "regional authorization" rather than a "high seas authorization" it may do so.

13. Additionally, we note that the use of an alphanumeric label in the classification of coast stations is unique to the United States. Other administrations use either descriptive terms (such as coastal and long-range) or frequency band) MF, HF, VFG) designations. We believe it would be less confusing to the public and more conducive to international relations to have our classification of coast stations follow the international designation of frequency bands.

14. For the reasons indicated above, we are amending Part 81 as proposed.

**License Modification**

15. The transmitters installed at coast stations are no longer listed on the station license. The power shown on the license is the maximum power for the given class of station. Therefore, the Notice proposed to delete the obsolete requirement for licensees to submit an application for modification when the transmitter power is changed.

16. All the commenters in the proceeding supported this proposal. Accordingly, we are deleting this obsolete license modification requirement.

**Area Coverage Restrictions**

17. In order to encourage the introduction of marine VHF communications for local area service, and to relieve frequency congestion in the 2 MHz marine band, the Commission adopted restrictions on the use of other than VHF communications when vessels are within the coverage area of VHF stations. Because VHF communications are now firmly established and congestion is no longer a problem in the 2 MHz band, the Notice proposed to remove these restrictions.

18. WJG supported the proposal as long as the Commission retained the requirement that a ship have VHF in addition to the MF installation. Northwest Marine Telephone, MMR and AMCOM opposed the deletion of the restriction from a frequency management point of view. We agree that communications should be conducted with the shortest range frequency and at the lowest power practicable, in order to minimize the potential for interference. However, we believe that the users will follow these

[5] This concern appears to be overly cautious in view of the accepted definition of "high seas" as "all parts of the sea that are not included in the territorial waters of a State" and the definition of "sea" and "gulf" which appear in Webster's International Dictionary.

[6] WJG, in its reply comments also, discusses interconnect agreements and asserts that the independent coast stations are penalized because of AT&T's reluctance to enter into fair and reasonable interconnect agreements with the independent marine public coast stations. MMR, in a letter to clarify its comments, states WJG misconstrued its comments on interconnect. An interconnect agreement entails both technical and business/operational terms and conditions which reflect a balancing of the interests of both parties. MMR explains that it did not intend to imply any sinister or inappropriate motive on the part of South Central Bell; but rather, that any change in underlying conditions which may warrant reopening of the interconnect agreement may have additional repercussions.

principles to obtain the most effective and efficient communications possible to satisfy their operational requirements. We feel that VHF will be used whenever possible because it is the most efficient and economical means of communications available. Therefore, we are removing the subject restrictions as proposed.

**DPLMRS**

19. Section 22.509(b) of the Commission's rules permits usage of Domestic Public Land Mobile Radio Service (DPLMRS) stations on board ships, but requires termination of communications on this system when VHF public coast station service becomes available in an area. Such termination is required without regard to user preference. The Notice proposed elimination of this termination requirement in order to allow ships to use the communications system most appropriate to their needs.

20. RCPR, Prestwood and SCTARS, all DPLMRS licensees, supported the proposal. Essentially, they view DPLMRS as an inexpensive additional service for vessels rather than a substitute for the maritime radio service. Radiocall/Standard, Burns Harbor, Marine Telephone, MMR, AMCOM and WJG, all public coast station licensees, opposed the proposal. They indicate that the maritime service is a national and international safety service as well as a means of providing for operational and business communications. The coast station licensees argue that DPLMRS licensees would be given an unfair advantage if allowed to enter the maritime market without reciprocal authority being provided for public coast to provide DPLMRS service. No comments were received from the boating public or the maritime industry.

21. This issue is being addressed in the Rule Making proceeding in CC Docket No. 80–57, initiated September 8, 1982, FCC 82–349, 47 FR 43842, which is reviewing Part 22 in its entirety. We believe it is more appropriate to consider the ramifications of this restriction in Part 22 in the context of this later proceeding.

**Summary**

22. In view of the foregoing, we are amending the rules as proposed to: (1) Classify coast stations by mode of operation and frequency bands authorized; (2) delete the requirement to modify the station license when the power of the transmitter is changed; and (3) delete certain rules which restrict the use of communications in frequency bands other than VHF when in a VHF station coverage area. We are not amending § 22.509 as had been proposed, but deferring consideration of this question to the Common Carrier Bureau in the context of CC Docket No. 80–57.

23. The adopted rules mainly pertain to the administrative classification of coast stations to align the class of the coast station with the services provided and the frequency bands necessary to provide the service. Therefore, the Commission has determined that Sections 603 and 604 of the Regulatory Flexibility Act (Pub. L. 96–354) do not apply to this rulemaking proceeding, because the rules will not, if promulgated, have a significant impact on a substantial number of small entities.

24. Regarding questions on matters covered in this document contact Nicholas G. Bagnato at (202) 632–7175.

25. Accordingly, it is ordered, That pursuant to the authority contained in Sections 4(i) and 303(a), (b), (c) and (r) of the Communications Act of 1934, as amended, Parts 81 and 83 of the Commission's rules are amended, as set forth in the attached Appendix, effective February 18, 1983.

26. It is further ordered, That this proceeding is terminated.

(Secs. 4, 303, 48 stat., as amended, 1066, 1082; 47 U.S.C. 154, 303

Federal Communications Commission.

**William J. Tricarico,**

*Secretary.*

**Appendix**

## PART 81—STATIONS ON LAND IN THE MARITIME SERVICES AND ALASKA—PUBLIC FIXED STATIONS

1. In § 81.3 paragraphs (h), (i), (j), (k) and (s) are revised, new paragraphs (l), (u) and (v) are added as follows:

### § 81.3 Maritime Mobile Service.

* * * * *

(h) *High seas telegraphy coast station.* A radiotelegraph public coast station licensed to provide a maritime service to ships at sea, including such service to several thousand kilometers, whose frequency assignment for this purpose includes appropriate frequencies between 3000 and 23000 kHz.

(i) *High seas telephony coast station.* A radiotelephone coast station (public or limited) licensed to provide a maritime service to ships at sea, including such services to ships at distances of several thousand kilometers, whose frequency assignment for this purpose includes frequencies between 3000 and 23000 kHz.

(j) *Regional telegraphy coast station.* A radiotelegraphy public coast station licensed to provide a maritime service, primarily of a regional character, whose frequency complement contains frequencies between 2000 and 3000 kHz.

(k) *Regional telephony coast station.* A radiotelephone coast station (public or limited) licensed to provide a maritime service to ships at sea, including such services to ships at distances up to 275 kilometers (150 nautical miles), whose frequency assignment for this purpose includes frequencies between 1605 and 3000 kHz.

(l) *Local service (VHF) coast station.* A radiotelephone coast station (public or limited) licensed to provide a maritime mobile service, primarily of local nature, whose frequency assignment does not include any frequency below 25,000 kHz.

* * * * *

(s) *Port operations service.* A maritime mobile service in or near a port, between coast stations and ship stations, or between ship stations, in which messages are restricted to those relating to the operational handling, the movement and safety of ships and, in emergency, to the safety of persons. Messages which are of public correspondence nature shall be excluded from this service.

* * * * *

(u) *Ship movement service.* A maritime mobile safety service, other than a port operations service, between coast stations and ship stations, or between ship stations, in which messages are restricted to those relating to the movement of ships. Messages which are of a public correspondence nature shall be excluded from this service.

(v) *Port station.* A coast station in the port operations service.

* * * * *

2. In § 81.22, paragraph (a) is revised as follows:

### § 81.22 Administrative classification of stations.

(a) Stations in the maritime mobile service subject to this part are licensed according to class of station as follows:

(1) Public high seas telegraphy coast station.

(2) Public high seas telephony coast stations.

(3) Public regional telegraphy coast stations.

(4) Public regional telephony coast stations.

(5) Public local service (VHF) coast stations.

(6) Limited high seas telephony coast stations.

(7) Limited regional telephony coast stations.

(8) Limited local service (VHF) coast stations.

(9) Marine utility stations.

* * * * *

**§ 81.36 [Amended]**

3. In § 81.36 paragraph (c) the proviso and (c)(1) and (2) are removed.

**§ 81.72 [Amended]**

4. In § 81.72, in paragraph (b), replace the words "Class I coast stations" with the words "high seas coast stations"; and in paragraph (c), replace the words "Class II and Class III coast stations" with the words "regional and local service (VHF) coast stations".

**§ 81.103 [Amended]**

5. In § 81.103, in paragraph (a) replace the words "Class I public coast station" with the words "high seas public coast station"; in paragraph (b) replace the words "Class II public coast station" with the words "regional public coast station"; and, in paragraph (c), replace the words "class III public coast station" with the words "local services (VHF) public coast station".

**§ 81.206 [Amended]**

6. In § 81.206, paragraph (a) replace the words "Class I coast stations" with the words "high seas coast stations"; and replace the words "Class II coast station" with the words "regional coast station".

**§ 81.303 [Amended]**

7. In § 81.303, in paragraphs (a) and (b), replace the words "Class III-B Public coast stations" with the words "local service (VHF) public coast stations".

**§ 81.304 [Amended]**

8. In § 81.304, paragraph (b)(22), replace the words "class III-B public coast station" with the words "local service (VHF) public coast station".

**§ 81.306 [Amended]**

9. In § 81.306 the introductory text of paragraphs (a), (b), (c), and (e), replace the words "Class I public coast station" with the words "high seas public coast stations" and in paragraph (f) replace the words "Class II" with the words "public regional".

**§ 81.313 [Amended]**

10. In § 81.313, in paragraph (a) replace the words "Class I public coast stations", with the words "high seas public coast stations", and in paragraphs (a) and (b), replace the words "Class II public coast stations" with the words "public regional coast stations", and in paragraph (b) replace the words "Class III public coast stations" with "local service (VHF) public coast stations".

**§ 81.330 [Amended]**

11. In § 81.330, in paragraph (a), replace the words "public coast III-B stations (VHF)" with the words "local service (VHF) public coast stations"; in paragraph (b) introductory text, replace the words "limited coast III-B station" with the words "local service (VHF) limited coast station" and in paragraph (c), replace the words "Class III-B public or limited station" with the words "local service (VHF) public or limited coast station".

## PART 83—STATIONS ON SHIPBOARD IN THE MARITIME SERVICES

1. In § 83.351, paragraph (c)(3) is revised and (c)(4) is removed and reserved as follows:

**§ 83.351 Frequencies available.**

* * * * *

(c) * * *

(3) All installations of transmitters employing SSB emissions (2.8A3A, 2.8A3H, and 2.8A3J) on frequencies in the band 2000–2850 kHz will be authorized only when the ship station is equipped for use of F3 emission on frequencies in the band 156–162 MHz.

(4) [Reserved]

* * * * *

2. In § 83.355, the heading and paragraph (b) are revised as follows:

**§ 83.355 Frequencies from 4000 kHz to 27.5 MHz for public correspondence.**

* * * * *

(b) The use of the working frequencies in paragraph (a) of this section is subject to the applicable conditions and limitations set forth in § 83.351.

3. In § 83.358, the introductory text of paragraph (a) is revised as follows:

**§ 83.358 Frequencies below 3000 kHz for safety purposes.**

(a) The following carrier frequencies are authorized for intership safety communications in the respective geographic areas. In addition, on a non-interference basis to safety communications, the frequencies, except for 2670 kHz, may be used for operational communications and, in the case of commercial transport vessel and vessels of municipal and state governments for business communications.

* * * * *

[FR Doc. 83-3048 Filed 2-9-83; 8:45 am]
BILLING CODE 6712-01-M

**DEPARTMENT OF TRANSPORTATION**

**Federal Railroad Administration**

**49 CFR Part 218**

**[FRA Docket No. RSOR-3, Notice No. 19]**

## Blue Signal Protection of Workmen; Recordkeeping Requirements

**AGENCY:** Federal Railroad Administration (FRA), DOT.

**ACTION:** Final rule.

**SUMMARY:** This document amends the FRA regulations concerning the blue signal protection of railroad employees while they are inspecting, repairing, and servicing rolling equipment. It eliminates unnecessary recordkeeping requirements and corrects several technical inaccuracies. This action is taken by FRA in an effort to improve its safety regulatory program.

**EFFECTIVE DATE:** This amendment will become effective March 14, 1983.

**FOR FURTHER INFORMATION CONTACT:** Bruce Fine, Office of Safety, Federal Railroad Administration, Washington, D.C. 20590 (Phone 202-426-4345).

**SUPPLEMENTARY INFORMATION:**

### Background

On April 1, 1981, the Paperwork Reduction Act of 1980 (44 U.S.C. 3501 *et seq.*,) became effective. One purpose of that statute was to minimize the paperwork burden imposed by the Federal Government.

The FRA, in conjunction with the Office of Management and Budget (OMB), began a review of FRA regulations to identify ways of reducing the regulatory paperwork burden associated with the FRA safety regulatory program. The FRA Railroad Operating Rules (49 CFR Part 218) were selected for detailed analysis. Based on that analysis, the FRA has concluded that the recordkeeping requirements prescribed in Section 218.30(c)(1) should be reduced by eliminating some of the data required to be recorded by operators of remotely controlled switches and by reducing the retention period for the remaining data from 30 days to 15 days.

The FRA issued a notice of proposed rulemaking on September 23, 1982 (47 FR 42001) proposing these changes. Two commenters responded to that proposal; both urged that FRA adopt the proposed changes. No comments objecting to the proposal were received. based on these comments and the FRA estimate that these changes will result in an annual savings to railroads of approximately 60,000 manhours of effort, FRA has

decided to adopt the proposal without change.

In reviewing this rule, FRA noted that the existing regulation has several technical inaccuracies caused by omitted words or incorrect phraseology. This amendment corrects those inaccuracies.

**Regulatory Impact**

This final rule has been evaluated in accordance with existing regulatory policies. The amendment will have a direct impact only on railroads. It will not have an adverse economic impact on any entity since it reduces regulatory requirements and burdens. It may have a positive economic impact through cost reductions for the approximately 400 railroads to which the regulation is applicable. Even though some of these railroads may constitute small entities, this amendment will not have a significant impact on a substantial number of small entities. The overall economic impact is so minimal that it does not warrant a regulatory evaluation under the terms of Executive Order 12291.

Based on the facts contained in this notice, it is certified that this proposed amendment will not have a significant economic impact on a substantial number of small entities under the provisions of the Regulatory Flexibility Act (5 U.S.C. 601 *et seq.*). The amendment does not constitute a major Federal action significantly affecting the quality of the human environment; an environmental impact statement is therefore not required. The amendment does not constitute a significant rule under the Department of Transportation regulatory policies and procedures.

**List of Subjects in 49 CFR Part 218**

Railroad safety.

**The Rule**

## PART 218—[AMENDED]

Based on the foregoing, Part 218 of Title 49, Code of Federal Regulations is amended as follows:

**§ 218.5 [Amended]**

1. Section 218.5(k) is amended by removing "Interlocking" and inserting in lieu thereof "Interlocking limits".

**§ 218.25 [Amended]**

2. Section 218.25(c) is amended by removing "railroad employees" and inserting in lieu thereof "workmen".

**§ 218.29 [Amended]**

3. Section 218.29(a)(2) is amended by removing "the": after "against", and by inserting "and" after "area" the second time it appears and before "locked".

4. Section 218.29(a)(3) is amended by inserting "be" after "must" and before "attached."

5. Section 218.29(a)(4) is amended by removing "within" the third time it appears.

6. Section 218.30 is amended by revising paragraph (c) to read:

**§ 218.30 Remotely controlled switches.**

* * * * *

(c) The operator must maintain for 15 days a written record of each notification which contains the following information:

(1) The name and craft of the employee in charge who provided the notification;

(2) The number or other designation of the track involved;

(3) The date and time the operator notified the employee in charge that protection had been provided in accordance with paragraph (a) of this section; and

(4) The date and time the operator was informed that the work had been completed, and the name and craft of the employee in charge who provided this information.

(Sec. 202 of the Federal Railroad Safety Act of 1970, as amended, 45 U.S.C. 431; and § 1.49(m) of the regulations of the Office of the Secretary of Transportation (49 CFR 1.49(m))

Issued in Washington, D.C. on January 21, 1983.

**Robert W. Blanchette,**

*Administrator.*

[FR Doc. 83-2314 Filed 2-9-83; 8:45 am]

BILLING CODE 4910-06-M

---

## 49 CFR Part 228

**[FRA Docket No. HS-4, Notice No. 10]**

## Hours of Service of Railroad Employees Recordkeeping Requirements

**AGENCY:** Federal Railroad Administration (FRA), Department of Transportation (DOT).

**ACTION:** Final rule.

**SUMMARY:** This document amends FRA regulations concerning the hours of service of railroad employees. It eliminates two unnecessary recordkeeping provisions of the existing regulations.

**EFFECTIVE DATE:** This amendment will become effective March 14, 1983.

**FOR FURTHER INFORMATION CONTACT:** Bruce Fine, Office of Safety, Federal Railroad Administration, Washington, D.C. 20590 (Phone 202-426-4345).

**SUPPLEMENTARY INFORMATION:**

**Background**

On April 1, 1981, the Paperwork Reduction Act of 1980 (44 U.S.C. 3501, *et seq.*) became effective. One purpose of that statute was to minimize the paperwork burden imposed by the Federal Government.

The FRA, in conjunction with the Office of Management and Budget, began a review of FRA regulations to identify ways of reducing the regulatory paperwork burden associated with the FRA safety regulatory program. The FRA regulations in Part 228, issued under the Hours of Service Act (45 U.S.C. 61-64b), were selected for detailed analysis.

The purpose of Part 228 is to assure that rail carriers maintain appropriate records to enable FRA to administer effectively the requirements of the Hours of Service Act. As a result of a detailed analysis, FRA has concluded that the recordkeeping requirements prescribed in sections 228.13 and 228.15 are not necessary to achieve that purpose. Section 228.13 requires rail carriers to keep a record of time delays of 10 minutes or more that are experienced at a single location by train and engine crews. Section 228.15 requires rail carriers to keep at specified locations a record of train movements. Examination of current enforcement practices revealed that these records are seldom utilized. In those rare instances where the information they contain would be useful, it can be obtained from other sources.

The FRA issued a notice of proposed rulemaking on September 23, 1982 (47 FR 42003) proposing these changes. Two commenters responded to the proposal; both urged that FRA adopt the proposed changes. No comments objecting to the proposal were received. Based on these comments and the FRA estimate that the changes will result in an annual savings to railroads of approximately 1,200,000 manhours of effort, FRA has decided to adopt the proposal without changes.

**List of Subjects in 49 CFR Part 228**

Railroad safety.

**Regulatory Impact**

This rule has been evaluated in accordance with existing regulatory policies and it is not a "major" rule as defined under Executive Order 12291. The amendment will have a direct impact only on railroads. The rule may have a positive economic impact through cost reductions realized by the approximately 400 rail carriers subject to the regulations. However, it will not have a significant cost economic impact on any entity since it only represents a

minor reduction in requirements and burdens. Moreover, the economic impact would be so minimal that it does not warrant a regulatory analysis under the terms of Executive Order 12291.

Based on the facts set forth in this notice, it is certified that the rule will not have a significant economic impact on a substantial number of small entities under the provisions of the Regulatory Flexibility Act (5 U.S.C. 601 *et seq.*). The amendment does not constitute a significant rule under the DOT regulatory policies and procedures.

**The Rule**

**PART 228—[AMENDED]**

Based on the foregoing, Part 228 of Title 49, Code of Federal Regulations, is amended as follows:

**§ 228.13 [Removed]**

1. Section 228.13 is removed in its entirety.

**§ 228.15 [Removed]**

2. Section 228.15 is removed in its entirety.

3. The references to §§ 228.13 and 228.15 are to be removed from the list of sections at the beginning of Part 228.

(Sec. 2 Hours of Service Act, as amended, 45 U.S.C. 61–64b; and § 1.49(d) regs. Office of the Secretary of Transportation (49 CFR 1.49(d)))

Issued in Washington, D.C. on January 21, 1983.

**Thomas A. Till,**

*Deputy Administrator.*

[FR Doc. 83-3446 Filed 2-9-83; 8:45 am]

BILLING CODE 4910-06-M

# Proposed Rules

Federal Register
Vol. 48, No. 29
Thursday, February 10, 1983

This section of the FEDERAL REGISTER contains notices to the public of the proposed issuance of rules and regulations. The purpose of these notices is to give interested persons an opportunity to participate in the rule making prior to the adoption of the final rules.

## DEPARTMENT OF TRANSPORTATION

### Federal Aviation Administration

### 14 CFR Part 71

[Airspace Docket No. 83-ASO-5]

### Proposed Designation of Transition Area; St. Marys, Georgia

**AGENCY:** Federal Aviation Administration (FAA), DOT.

**ACTION:** Notice of proposed rulemaking.

**SUMMARY:** This notice proposes to designate a transition area at St. Marys, Georgia, to accommodate Instrument Flight Rule (IFR) operations at St. Marys Airport. This action will lower the base of controlled airspace from 1,200 to 700 feet above the surface. An instrument approach procedure, based on the Jacksonville Airport Surveillance Radar (ASR) system, has been developed to serve St. Marys Airport and additional controlled airspace is required to protect IFR operations.

**DATE:** Comments must be received on or before March 15, 1983.

**ADDRESSES:** Send comments on the proposal in triplicate to: Federal Aviation Administration, Attn: Manager, Airspace and Procedures Branch, ASO-530, P.O. Box 20636, Atlanta, Georgia 30320

The official docket may be examined in the Office of the Regional Counsel, Room 652, 3400 Norman Berry Drive, East Point, Georgia 30344, telephone: (404) 763-7646.

**FOR FURTHER INFORMATION CONTACT:** Donald Ross, Airspace and Procedures Branch, Air Traffic Division, Federal Aviation Administration, P.O. Box 20636, Atlanta, Georgia 30320; telephone: (404) 763-7646.

**SUPPLEMENTARY INFORMATION:**

#### Comments Invited

Interested parties are invited to participate in this proposed rulemaking by submitting such written data, views or arguments as they may desire. Comments that provide the factual basis supporting the views and suggestions presented are particularly helpful in developing reasoned regulatory decisions on the proposal. Comments are specifically invited on the overall regulatory, economic, environmental, and energy aspects of the proposal. Communications should identify the airspace docket and be submitted in triplicate to address listed above. Commenters wishing the FAA to acknowledge receipt of their comments on this notice must submit with those comments a self-addressed, stamped postcard on which the following statement is made: "Comments to Airspace Docket No. 83-ASO-5." The postcard will be date/time stamped and returned to the commenter. All communications received before the specified closing date for comments will be considered before taking action on the proposed rule. The proposal contained in this notice may be changed in the light of comments received. All comments submitted will be available in the Rules Docket both before and after the closing date for comments. A report summarizing each substantive public contact with FAA personnel concerned with this rulemaking will be filed in the docket.

#### Availability of NPRM's

Any person may obtain a copy of this Notice of Proposed Rulemaking (NPRM) by submitting a request to the Federal Aviation Administration, Manager, Airspace and Procedures Branch (ASO-530), Air Traffic Division, P.O. Box 20636, Atlanta, Georgia 30320. Communications must identify the notice number of this NPRM. Persons interested in being placed on a mailing list for furture NPRM's should also request a copy of Advisory Circular No. 11-2 which describes the application procedure.

#### The Proposal

The FAA is considering an amendment to § 71.181 of Part 71 of the Federal Aviation Regulation (14 CFR Part 71) to designate the St. Marys, Georgia, 700-foot transition area. This action will provide controlled airspace for aircraft executing instrument approach procedures at St. Marys Airport. It the proposed designation of the transition area is found acceptable, the airport operating status will be changed from VFR to IFR. Section 71.181 of Part 71 of the Federal Aviation Regulations was republished in Advisory Circular AC 70-3A dated January 3, 1983.

#### List of Subjects in 14 CFR Part 71

Aviation safety, Airspace, Transition areas.

#### The Proposed Amendment

Accordingly, pursuant to the authority delegated to me, the Federal Aviation Administration proposes to amend § 71.181 of Part 71 of the Federal Aviation Regulations (14 CFR Part 71) as follows:

**St. Marys Airport, GA—New**

That airspace extending upward from 700 feet above the surface within a 6.5-mile radius of St. Marys Airport (Lat. 30°45'16"N., Long. 81°33'27"W.), excluding that portion that coincides with the Fernandina Beach Airport transition area.

(Secs. 307(a) and 313(a), Federal Aviation Act of 1958 (49 U.S.C. 1348(a) and 1354(a)); sec. 6(c), Department of Transportation Act (49 U.S.C. 1655(c)); and 14 CFR 11.65)

**Note.**—FAA has determined that this proposed regulation only involves an established body of technical regulations for which frequent and routine amendments are necessary to keep them operationally current. It, therefore, (1) is not a "major rule" under Executive Order 12291; (2) is not a "significant rule" uder DOT Regulatory Policies and Procedures (44 FR 11034; February 26, 1979); and (3) does not warrant preparation of a regulatory evaluation as the anticipated impact is so minimal. Since this is a routine matter that will only affect air traffic procedures and air navigation, it is certified that this rule, when promulgated, will not have a significant economic impact on a substantial number of small entities under the criteria of the Regulatory Flexibility Act.

Issued in East Point, Georgia, on February 1, 1983.

**J. Stiglin,**

*Acting Director, Southern Region.*

[FR Doc. 83-3622 Filed 2-9-83; 8:45 am]

BILLING CODE 4910-13-M

### 14 CFR Part 71

[Airspace Docket No. 83-ASW-5]

### Proposed Alteration of Transition Area and Designation of Control Zone; Houma, LA

**AGENCY:** Federal Aviation Administration (FAA), DOT.

**ACTION:** Notice of proposed rulemaking.

**SUMMARY:** The Federal Aviation Administration proposes to alter the transition area and designate a control zone at Houma, LA. The intended effect of the proposed action is to provide controlled airspace for aircraft executing standard instrument approach procedures (SIAP's) to the Houma-Terrebonne Airport. This action is necessary since the FAA proposes to commission an airport traffic control tower (ATCT) at Houma-Terrebonne and the airport will meet the requirement for the establishment of controlled airspace to the surface. In addition, the RNAV approaches to Runway 17 and 35 require 700-foot transition area extensions to the north and south.

**DATE:** Comments must be received on or before March 14, 1983.

**ADDRESSES:** Send comments on the proposal in triplicate to: Manager, Airspace and Procedures Branch, Air Traffic Division, Southwest Region, Federal Aviation Administration, P.O. Box 1689, Fort Worth, TX 76101.

The official docket may be examined in the Rules Docket, weekdays, except Federal holidays, between 8 a.m. and 4:30 p.m. The FAA Rules Docket is located in the Office of the Regional Counsel, Southwest Region, Federal Aviation Administration, 4400 Blue Mound Road, Fort Worth, TX.

**FOR FURTHER INFORMATION CONTACT:** Kenneth L. Stephenson, Airspace and Procedures Branch, ASW-535, Air Traffic Division, Southwest Region, Federal Aviation Administration, P.O. Box 1689, Fort Worth, TX 76101; telephone: (817) 624-4911, extension 302.

**SUPPLEMENTARY INFORMATION:**

## History

Federal Aviation Regulation Part 71, Subpart G, § 71.181 and Subpart F, § 71.171 as republished in Advisory Circular AC 70-3A dated January 3, 1983, contains the description of transition areas and control zones designated to provide controlled airspace for the benefit of aircraft conducting instrument flight rules (IFR) activity. Alteration of the transition area and designation of a control zone at Houma, LA, will necessitate an amendment to this subpart. This amendment will be required at Houma, LA, since there is a proposed ATCT at the Houma-Terrebonne Airport and a review of the designated transition area revealed an extension to the north and south is required for the protection of aircraft executing RNAV approaches.

## Comments Invited

Interested persons are invited to participate in this proposed rulemaking by submitting such written data, views, or arguments as they may desire. Comments that provide the factual basis supporting the views and suggestions presented are particularly helpful in developing reasoned regulatory decisions on the proposals. (Comments are specifically invited on the overall regulatory, economic, enviromental, and energy aspects of the proposals.) Communications should identify the airspace docket and be submitted in triplicate to the address listed above. Commenters wishing the FAA to acknowledge receipt of their comments on this notice must submit with those comments a self-addressed, stamped postcard on which the following statement is made: "Comments to Airspace Docket No. 83-ASW-5." The postcard will be date/time stamped and returned to the commenter. All communications received before the specified closing date for comments will be considered before taking action on the proposed rule. The proposals contained in this notice may be changed in the light of comments received. All comments submitted will be available for examination in the Rules Docket both before and after the closing date for comments. A report summarizing each substantive public contact with FAA personnel concerned with this rulemaking will be filed in the docket.

## Availability of NPRM

Any person may obtain a copy of this notice of proposed rulemaking (NPRM) by submitting a request to the Manager, Airspace and Procedures Branch, Air Traffic Division, Southwest Region, Federal Aviation Administration, P.O. Box 1689, Fort Worth, TX 76101, or by calling (817) 624-4911, extension 302. Communications must identify the notice number of this NPRM. Persons interested in being placed on a mailing list for future NPRM's should contact the office listed above.

## List of Subjects in 14 CFR Part 71

Control zones, Transition areas, Aviation safety.

## The Proposed Amendment

Accordingly, pursuant to the authority delegated to me, the, FAA proposes to amend §§ 71.181 and 71.171 of Part 71 of the Federal Aviation Regulations (14 CFR Part 71) as follows:

*Subpart F, § 71.171:*

Houma, LA New

Within a 5-mile radius of the Houma-Terrebonne Airport (latitude 29°34'03"N., longitude 90°39'37"W.); and within 2 miles each side of the 123° radial of the Tibby VORTAC extending from the 5-mile radius area to the VORTAC. This control zone is effective during the specific dates and times established in advance by a Notice to Airmen. The effective dates and times will thereafter be continuously published in the Airport/Facility Directory.

*Subpart G §,71.181:*

**Houma, LA Revised**

That airspace extending upward from 700 feet above the surface within a 6.5-mile radius of the Houma-Terrebonne Airport (latitude 29°34'03"N., longitude 90)39°37"W.); and within 2 miles each side of the 123° radial of the Tibby VORTAC extending from the 6.5-mile radius area to the VORTAC; and within 4.5 miles each side of a 360° bearing from the airport extending from the 6.5-mile radius area to 13 miles north of the airport; and within 4.5 miles each side of a 180° bearing from the airport extending from the 6.5-mile radius area to 9 miles south of the airport.

(Sec. 307(a), Federal Aviation Act of 1958 (49 U.S.C. 1348(a)); Sec. 6(c), Department of Transportation act (49 U.S.C. 1655(c)); and 14 CFR 11.61(c))

**Note.**—The FAA has determined that this regulation only involves an established body of technical regulations for which frequent and routine amendments are necessary to keep them operationally current. It, therefore—(1) is not a "major rule" under Executive Order 12291; (2) is not a "significant rule" under DOT Regulatory Policies and Procedures (44 FR 11034; February 26, 1979); and (3) does not warrant preparation of a regulatory evaluation as the anticipated impact is so minimal. Since this is a routine matter that will only affect air traffic procedures and air navigation, it is certified that this rule, when promulgated, will not have a significant economic impact on a substantial number of small entities under the criteria of the Regulatory Flexibility Act.

Issued in Fort Worth, TX, on February 1, 1983.

F. E. Whitfield,

*Acting Director, Southwest Region.*

[FR Doc. 83-3821 Filed 2-9-83; 8:45 am]

BILLING CODE 4910-13-M

---

## 14 CFR Part 71

**[Airspace Docket No. 83-ASO-4]**

## Proposed Designation of Transition Area, Lexington, Mississippi

**AGENCY:** Federal Aviation Administration (FAA), DOT.

**ACTION:** Notice of proposed rulemaking.

**SUMMARY:** This notice proposes to designate a transition area at Lexington, Mississippi, to accommodate Instrument Flight Rule (IFR) operations at C. A. Moore Airport. This action will lower

the base of controlled airspace from 1,200 to 700 feet above the surface. An instrument approach procedure, based on the Greenwood VORTAC facility, has been developed to serve the airport and additional controlled airspace is required to protect IFR operations.

**DATE:** Comments must be received on or before March 15, 1983.

**ADDRESSES:** Send comments on the proposal in triplicate to: Federal Aviation Administration, Attn: Manager, Airspace and Procedures Branch, ASO-530, P.O. Box 20636, Atlanta, Georgia 30320.

The official docket may be examined in the Office of the Regional Counsel, Room 652, 3400 Norman Berry Drive, East Point, Georgia 30344, telephone: (404) 763-7646.

**FOR FURTHER INFORMATION CONTACT:** Donald Ross, Airspace and Procedures Branch, Air Traffic Division, Federal Aviation Administration, P.O. Box 20636, Atlanta, Georgia 30320; telephone: (404) 763-7646.

**SUPPLEMENTARY INFORMATION:**

### Comments Invited

Interested parties are invited to participate in this proposed rulemaking by submitting such written data, views or arguments as they may desire. Comments that provide the factual basis supporting the views and suggestions presented are particularly helpful in developing reasoned regulatory decisions on the proposal. Comments are specifically invited on the overall regulatory, economic, environmental, and energy aspects of the proposal. Communications should identify the airspace docket and be submitted in triplicate to the address listed above. Commenters wishing the FAA to acknowledge receipt of their comments on this notice must submit with those comments a self-addressed, stamped postcard on which the following statement is made: "Comments to Airspace Docket No. ———." The postcard will be date/time stamped and returned to the commenter. All communications received before the specified closing date for comments will be considered before taking action on the proposed rule. The proposal contained in this notice may be changed in the light of comments received. All comments submitted will be available in the Rules Docket both before and after the closing date for comments. A report summarizing each substantive public contact with FAA personnel concerned with this rulemaking will be filed in the docket.

### Availability of NPRM's

Any person may obtain a copy of this Notice of Proposed Rulemaking (NPRM) by submitting a request to the Federal Aviation Administration, Manager, Airspace and Procedures Branch (ASO-530), Air Traffic Division, P.O. Box 20636, Atlanta, Georgia 30320. Communications must identify the notice number of this NPRM. Persons interested in being placed on a mailing list for future NPRM's should also request a copy of Advisory Circular No. 11-2 which describes the application procedure.

### The Proposal

The FAA is considering an amendment to § 71.181 of Part 71 of the Federal Aviation Regulations (14 CFR Part 71) to designate the Lexington, Mississippi, 700-foot transition area. This action will provide controlled airspace for aircraft executing instrument approach procedures at C. A. Moore Airport. If the proposed designation of the transition area is found acceptable, the airport operating status will be changed from VFR to IFR. Section 71.181 of Part 71 of the Federal Aviation Regulations was republished in Advisory Circular AC 70-3A dated January 3, 1983.

### List of Subjects in 14 CFR Part 71

Aviation safety, Airspace, Transition area.

### The Proposed Amendment

Accordingly, pursuant to the authority delegated to me, the Federal Aviation Administration proposes to amend § 71.181 of Part 71 of the Federal Aviation Regulations (14 CFR Part 71) as follows:

**Lexington C. A. Moore Airport, MS—New**

That airspace extending upward from 700 feet above the surface within a 6.5-mile radius of C. A. Moore Airport (Lat. 33°07'31"N., Long. 90°01'33"W.); within 4.5 miles each side of Greenwood VORTAC 148° radial, extending from the 6.5-mile radius area to 8 miles northwest of the airport.

(Secs. 307(a) and 313(a), Federal Aviation Act of 1958 (49 U.S.C. 1348(a) and 1354(a)); sec. 6(c), Department of Transportation Act (49 U.S.C. 1655(c)); and 14 CFR 11.65)

Note.—The FAA has determined that this proposed regulation only involves an established body of technical regulations for which frequent and routine amendments are necessary to keep them operationally current. It, therefore, (1) is not a "major rule" under Executive Order 12291; (2) is not a "significant rule" under DOT Regulatory Policies and Procedures (44 FR 11034; February 26, 1979); and (3) does not warrant preparation of a regulatory evaluation as the anticipated impact is so minimal. Since this is a routine matter that will only affect air traffic procedures and air navigation, it is certified that ths rule, when promulgated, will not have a significant economic impact on a substantial number of small entities under the criteria of the Regulatory Flexibility Act.

Issued in East Point, Georgia, on January 28, 1983.

**George R. LaCaille,**

*Acting Director, Southern Region.*

[FR Doc. 83-3260 Filed 2-9-83; 8:45 am]

BILLING CODE 4910-13-M

---

## 14 CFR Part 71

**[Airspace Docket No. 83-ASW-7]**

## Proposed Designation of Transition Area; Port O'Connor, TX

**AGENCY:** Federal Aviation Administration (FAA), DOT.

**ACTION:** Notice of proposed rulemaking.

**SUMMARY:** The Federal Aviation Administration proposes to designate a transition area at Port O'Connor, TX. The intended effect of the proposed action is to provide controlled airspace for helicopters executing a new point-in-space instrument approach procedure to the PHI Heliport. This action is necessary since a new point-in-space helicopter approach procedure is proposed to the PHI Heliport located approximately 3 miles west of Port O'Connor, TX.

**DATE:** Comments must be received on or before March 14, 1983.

**ADDRESSES:** Send comments on the proposal in triplicate to: Manager, Airspace and Procedures Branch, Air Traffic Division, Southwest Region, Federal Aviation Administration, P.O. Box 1689, Fort Worth, TX 76101.

The official docket may be examined in the Rules Docket, weekdays, except Federal holidays, between 8 a.m. and 4:30 p.m. The FAA Rules Docket is located in the Office of the Regional Counsel, Southwest Region, Federal Aviation Administration, 4400 Blue Mound Road, Fort Worth, TX.

**FOR FURTHER INFORMATION CONTACT:** Kenneth L. Stephenson, Airspace and Procedures Branch, ASW-535, Air Traffic Division, Southwest Region, Federal Aviation Administration, P.O. Box 1689, Fort Worth, TX 76101; telephone: (817) 624-4911, extension 302.

**SUPPLEMENTARY INFORMATION:**

### History

Federal Aviation Regulation Part 71, Subpart G 71.181 as republished in Advisory Circular AC 70-3A dated January 3, 1983, contains the description of transition areas designated to provide controlled airspace for the benefit of

helicopters conducting instrument flight rules (IFR) activity. Designation of the transition area at Port O'Connor, TX, will necessitate an amendment to this subpart. This amendment will be required at Port O'Connor, TX, since there is a proposed IFR procedure for helicopters to the PHI Heliport.

**Comments Invited**

Interested persons are invited to participate in this proposed rulemaking by submitting such written data, views, or arguments as they may desire. Comments that provide the factual basis supporting the views and suggestions presented are particularly helpful in developing reasoned regulatory decisions on the proposals. (Comments are specifically invited on the overall regulatory, economic, environmental, and energy aspects of the proposals.) Communications should identify the airspace docket and be submitted in triplicate to the address listed above. Commenters wishing the FAA to acknowledge receipt of their comments on this notice must submit with those comments a self-addressed, stamped postcard on which the following statement is made: "Comments to Airspace Docket No. 83-ASW-7." The postcard will be date/time stamped and returned to the commenter. All communications received before the specified closing date for comments will be considered before taking action on the proposed rule. The proposals contained in this notice may be changed in the light of comments received. All comments submitted will be available for examination in the Rules Docket both before and after the closing date for comments. A report summarizing each substantive public contact with FAA personnel concerned with this rulemaking will be filed in the docket.

**Availability of NPRM**

Any person may obtain a copy of this notice of proposed rulemaking (NPRM) by submitting a request to the Manager, Airspace and Procedures Branch, Air Traffic Division, Southwest Region, Federal Aviation Administration, P.O. Box 1689, Fort Worth, TX 76101, or by calling (817) 624-4911, extension 302. Communications must identify the notice number of this NPRM. Persons interested in being placed on a mailing list for future NPRM's should contact the office listed above.

**List of Subjects in 14 CFR Part 71**

Transition areas, Aviation safety.

**The Proposed Amendment**

Accordingly, pursuant to the authority delegated to me, the FAA proposed to amend § 71.181 of Part 71 of the Federal Aviation Regulations (14 CFR Part 71) as follow:

**Port O'Connor, TX New**

That airspace extending upward from 700 feet above the surface 2.5 miles each side of the Palacios VORTAC (latitude 28°45'51" N., longitude 96°18'21" W.) 208° radial extending from 18 miles to 25 miles southwest of the VORTAC.

(Sec. 307(a), Federal Aviation Act of 1958 (49 U.S.C. 1348(a)); Sec. 6(c), Department of Transportation Act (49 U.S.C. 1655(c)); and 14 CFR 11.61(c))

**Note.**—The FAA has determined that this regulation only involves an established body of technical regulations for which frequent and routine amendments are necessary to keep them operationally current. It, therefore—(1) is not a "major rule" under Executive Order 12291; (2) is not a "significant rule" under DOT Regulatory Policies and Procedures (44 FR 11034; February 26, 1979); and (3) does not warrant preparation of a regulatory evaluation as the anticipated impact is so minimal. Since this is a routine matter that will only affect air traffic procedures and air navigation, it is certified that this rule, when promulgated, will not have a significant economic impact on a substantial number of small entities under the criteria of the Regulatory Flexibility Act.

Issued in Fort Worth, TX, on February 1, 1983.

**F. E. Whitfield,**

*Acting Director, Southwest Region.*

[FR Doc. 83-3620 Filed 2-9-83; 8:45 am]

BILLING CODE 4910-13-M

---

**14 CFR Part 71**

**[Airspace Docket No. 82-ASW-69]**

## Proposed Alteration of Transition Area; San Marcos, TX

**AGENCY:** Federal Aviation Administration (FAA), DOT.

**ACTION:** Withdrawal of notice of proposed rulemaking.

**SUMMARY:** This action is necessary to withdraw a notice of proposed rulemaking (NPRM), Airspace Docket No. 82-ASW-69, FR Doc. 82-27682, published in the **Federal Register** on October 7, 1982 (47 FR 44342). The notice was to alter the transition area at San Marcos, TX, for the protection of aircraft executing standard instrument approach procedures (SIAP's) to the San Marcos Municipal Airport. Subsequent to the notice, the Federal Aviation Administration (FAA) determined that the proposed designated airspace was not sufficient for the protection of aircraft and a new action was initiated to properly describe the necessary controlled airspace. This action was published in the **Federal Register** on December 13, 1982 (47 FR 55659), Airspace Docket 82-ASW-81.

**FOR FURTHER INFORMATION CONTACT:** Kenneth L. Stephenson, Airspace and Procedures Branch, ASW-535, Air Traffic Division, Southwest Region, Federal Aviation Administration, P.O. Box 1689, Fort Worth, TX 76101; telephone: (817) 624-4911, extension 302.

**List of Subjects in 14 CFR Part 71**

Transition areas, Aviation safety.

Accordingly, pursuant to the authority delegated to me, the notice of proposed rulemaking (NPRM) published in the **Federal Register** on October 7, 1982 (47 FR 44342), FR Doc. 82-27682, is canceled.

(Sec. 307(a), Federal Aviation Act of 1958 (49 U.S.C. 1348(a)); Sec. 6(c), Department of Transportation Act (49 U.S.C. 1655(c)); and 14 CFR 11.61(c))

**Note.**—The FAA has determined that this action only involves an established body of technical regulations for which frequent and routine amendments are necessary to keep them operationally current. It, therefore—(1) is not a "major rule" under Executive Order 12291; (2) is not a "significant rule" under DOT Regulatory Policies and Procedures (44 FR 11034; February 26, 1979); and (3) does not warrant preparation of a regulatory evaluation as the anticipated impact is so minimal.

Issued in Fort Worth, TX, on January 24, 1983.

**F. E. Whitfield,**

*Acting Director, Southwest Region.*

[FR Doc. 83-3623 Filed 2-9-83; 8:45 am]

BILLING CODE 4910-13-M

---

**COMMODITY FUTURES TRADING COMMISSION**

**17 CFR Part 33**

## Options on Domestic Agricultural Commodities

**AGENCY:** Commodity Futures Trading Commission.

**ACTION:** Advance notice of proposed rulemaking.

**SUMMARY:** Recent amendments to the Commodity Exchange Act ("Act"), 7 U.S.C. 1 *et seq.*, have removed a long-standing ban on the trading of options on certain domestic agricultural commodities. Specifically, Section 206 of the Futures Trading Act of 1982 authorizes the Commodity Futures Trading Commission ("Commission") to establish a pilot program, not to exceed three years in length, for the trading, on domestic exchanges, of options on the domestic agricultural commodities specifically enumerated in Section 2(a) of the Act. Options involving the

domestic agricultural commodities will, however, continue to remain unlawful until such time as the Commission establishes such a pilot program and other conditions set forth in the Futures Trading Act of 1982 are met. Although any such pilot program would be comparable to, or included in, the option pilot program already established by the Commission for the trading of options on futures contracts and options on physicals, the Commission is requesting comments on a number of issues prior to proposing specific rules to govern the trading of agricultural options.

**DATE:** Comments must be received by April 11, 1983.

**ADDRESS:** Comments should be sent to: Commodity Futures Trading Commission, 2033 K Street NW., Washington, D.C. 20581. Attention: Secretariat.

**FOR FURTHER INFORMATION CONTACT:** Kenneth M. Rosenzweig, Assistant Chief Counsel, or Lawrence B. Patent, Special Counsel, Division of Trading and Markets, Commodity Futures Trading Commission, 2033 K Street NW., Washington, D.C. 20581. Telephone: (202) 254-8955.

**SUPPLEMENTARY INFORMATION:** Options involving the domestic agricultural commodities specifically enumerated in Section 2(a) of the Commodity Exchange Act prior to the enactment of the Commodity Futures Trading Commission Act of 1974 [1] have been unlawful since 1936. [2] Recent amendments to the Commodity Exchange Act, however, have modified that prohibition to authorize the Commission to establish a pilot program for the trading of options on domestic agricultural commodities.[3] Specifically, that legislation amends Section 4c(c) of the Commodity Exchange Act [4] to provide:

With respect to any commodity regulated under this Act and specifically set forth in section (2) (a) of this Act prior to the date of enactment of the Commodity Futures Trading Commission Act of 1974, the Commission may, pursuant to the procedures set forth in this subsection, establish a pilot program for a period not to exceed three years to permit such commodity option transactions. The Commission may authorize commodity option transactions during the pilot program in as many commodities as will provide an adequate test of the trading of such option transactions. After completion of the pilot program, the Commission may authorize commodity option transactions without regard to the restrictions in the pilot program after the Commission transmits to the House Committee on Agriculture and the Senate Committee on Agriculture, Nutrition, and Forestry the documentation required under * * * this subsection and the expiration of thirty calendar days of continuous session of Congress after the date of such transmittal.

A pilot program for the trading of options on agricultural commodities would supplement the options pilot program already established by the Commission for the trading, on domestic exchanges, of options on futures contracts [5] and options on physical commodities.[6] In lifting the ban on agricultural options, Congress indicated its belief that options on agricultural commodities could become a beneficial marketing tool for farmers and the agricultural industry. Options offer a way to obtain price protection without the need to give up potential profits resulting from favorable price movements.[7]

Congress was well aware, however, that it was the perceived adverse effects of option trading upon prices for domestic agricultural commodities which led to the 1936 ban on option trading. Thus, the Congressional determination to allow a limited, test program for the trading of agricultural options was based, in significant part, upon its judgment that it was "highly unlikely" that the "abuses which clouded the trading of agricultural options in the 1930's could recur in the 1980's.[8] The Commission, therefore, will be sensitive to these concerns as it develops a pilot program for agricultural options and will take such steps as it determines to be necessary to prevent a recurrence of the types of practices which led to the prohibition of agricultural options.

The Commission is further aware of the Congressional judgment that any agricultural option pilot program should be carefully controlled in order to allow the Commission to assess, in an orderly fashion, producer acceptance of these options and, in particular, the level of participation by the agricultural industry in using options for commercial purposes.[9] Thus, the Commission intends to proceed cautiously in the development of such a pilot program in order to allow the public, the Commission, and the Congress an opportunity to evaluate carefully the appropriate scope and structure of this pilot program.

To this end, the Commission is requesting comments on a number of specific issues, set forth below, relating to the trading of options on agricultural commodities. The Commission also wishes to encourage interested persons to offer comments on any other issues which, although not specifically the subject of the questions set forth below, may be of use to the Commission when it proposes regulations to implement this pilot program.

(1) The Commission requests comments from agricultural producers, processors, merchants and other commercial interests regarding the potential uses they foresee for agricultural options and the degree of their support for an exchange-traded agricultural options program.

(2) The Commission's existing option pilot program includes both options on futures contracts and options on actual, "physical" commodities. (In both instances, the options involve commodities which are not specifically enumerated in Section 2(a) of the Act.) Should the Commission limit options on the enumerated domestic agricultural commodities to options on futures contracts involving those commodities or should the Commission permit the trading of options on the physical commodity as well? Persons responding to this question are asked to compare and assess the effects on the deliverable supply for related futures contracts of options on futures contracts and options on physicals. Where possible, commentators should also address the

[1] Prior to the enactment of the Commodity Futures Trading Commission Act of 1974, Pub. L. No. 93-463, 88 Stat. 1389 (1974), Section 2(a) of the Act defined the term "commodity" to mean:

Wheat, cotton, rice, corn, oats, barley, rye, flaxseed, grain sorghums, mill feeds, butter, eggs, onions, Solanum tuberosum (Irish potatoes), wool, wool tops, fats and oils (including lard, tallow, cottonseed oil, peanut oil, soybean oil and all other fats and oils), cottonseed meal, cottonseed, peanuts, soybeans, soybean meal, livestock, livestock products, and frozen concentrated orange juice.

U.S.C. 2 (supp. IV 1974).

[2] Commodity Exchange Act of 1936, ch. 545, § 4c (B), 49 Stat. 1491 (1936) (codified at 7 U.S.C. 6c(b) (Supp V 1981).

[3] Futures Trading Act of 1982, Pub. L. No. 97-444, § 208 (3), 96 Stat. 2294 (January 11, 1983).

[4] U.S.C. 6c(c) (Supp V 1981).

[5] 46 FR 54500 (November 3, 1981).

[6] 47 FR 56996 (December 22, 1982).

[7] *See* S. Rep. No. 97-384, 97th Cong. 2d Sess. 49-50 (1982); H.R. Rep. No. 97-565 (Part 1), 97th Cong., 2d Sess. 47 (1982).

[8] S. Rep. No. 97-384, 97th Cong., 2d Sess. 50 (1982).

The statutory ban on the trading of agricultural options was enacted in 1936, largely as a result of abuses in options trading. Circumstances under which options would be traded today, however, are markedly different from those which existed in the 1930's. Farmers themselves are much more sophisticated and have a much more extensive network of communications available to them. The futures exchanges have developed extensive compliance programs designed to detect and prevent trading abuses. The Commission itself is a viable regulatory force that has shown itself willing and able to oversee and regulate commodity trading.

*Id. See also* 46 FR 54500, 54502 & n. 7 (November 3, 1981).

[9] H.R. Rep. No. 97-565 (Part 1), 97th Cong., 2d Sess. 47 (1982); *see* Commission regulation 33.6(c) (47 FR 56996, 57018 (December 22, 1982)).

liquidity of existing cash markets and the adequacy of existing agricultural cash price series in view of the requirements previously established by the Commission for contract market designation for the trading of options on physicals.[10] The Commission also requests that the commentators address the extent to which increased surveillance of the deliverable supply underlying these options and related futures contracts will be necessary, especially with respect to options on the physical commodity.

(3) The Commission's existing pilot program regulations allow any domestic board of trade meeting the requirements of the Act and the Commission's regulations to apply for contract market designation for options on physicals. By comparison, a board of trade seeking designation for options on futures contracts must also be designated as a contract market for the futures contract which underlies the option.[11] If the Commission determines to allow options on actual agricultural commodities, should the Commission nonetheless limit participation to those boards of trade which are designated as contract markets for a futures contract which draws on the same deliverable supply as the proposed option on a physical?[12]

(4) Although Commission regulation 33.4(a)(6) limits each domestic exchange participating in the existing option pilot program to one option on a futures contract and one option on a physical,[13] the amendment to Section 4c(c) of the Act authorizing the agricultural option pilot program specifies that the Commission may allow option trading during the pilot program "in as many commodities as will provide an adequate test of the trading of such option transactions." In view of these considerations, how, and in what manner, should the Commission limit the number of option contracts which may be traded under the agricultural option pilot program?

(5) On what basis, if any, should the Commission prohibit option trading in certain domestic agricultural commodities? Should any such prohibition be restricted either to options on futures contracts to options on physicals?

(6) Commentators are asked to consider whether Commission regulation 33.4(d)(1),[14] which requires boards of trade applying for contract market designation for options trading to submit an analysis and justification of the expiration date of the option if that date is less than ten business days before the earlier of the last trading day or the first notice day of any futures contract on the same or a related commodity, provides sufficient safeguards for options based on agricultural commodities.

(7) Commission regulation 33.4(b)(11) requires that each board of trade designated, or seeking designation, as a contract market for the trading of options on futures contracts and options on physicals adopt rules which "establish appropriate criteria which are reasonably designed to secure performance, upon exercise, of the option contracts."[15] The Commission has stated that although the rule applies to both options on futures and options on physicals, it is "particularly concerned that the grantor of a call option on a physical have the ability to perform his obligation to make delivery of the physical underlying the option."[16] The Senate Committee report which accompanies the legislation authorizing agricultural options further indicates, however, that trading in these options should not begin until a study of "grantor eligibility" has been completed.[17] The Commission is therefore requesting comments as to whether, under an agricultural options pilot program, it should adopt minimum standards for option grantors and, if so, what criteria (*e.g.*, limitations on the time and place of delivery on exercised options or commercial use of the option markets by the option grantor) should be applied by the Commission or the contract markets.

(8) The customer protection standards adopted by the Commission for option transactions are virtually identical for options on futures contracts and options on physicals. (By comparison, the criteria for contract market designtion necessarily reflect differences between the two types of instruments.) The Commission requests comments as to whether any additional or different customer protection measures—such as disclosures different than those now required by Commission regulation 33.7[18]—should be required for options on agricultural commodities.

[10] *See* Commission regulation 33.4(a)(5)(iv) (47 FR 56996, 57017 (December 22, 1982)).

[11] *See* 47 FR 56996, 56996–97 (December 22, 1982).

[12] *See* H.R. Rep. No. 97–565 (Part 1), 97th Cong., 2d Sess. 130 (1982).

[13] 47 FR 56996, 57017 (December 22, 1982).

[14] *Id.*

[15] *Id.*

[16] 47 FR 28401, 28404 (June 30, 1982).

[17] S. Rep. No. 97–384, 97th Cong., 2d Sess. 50 (1982).

[18] 17 CFR 33.7 (1982), as amended by 47 FR 56996, 57018–20 (December 22, 1982).

**List of Subjects in 17 CFR Part 33**

Commodity options.

Issued in Washington, D.C. this 3rd day of February, 1983, by the Commission.

**Jean A. Webb,**

*Deputy Secretary of the Commission.*

[FR Doc. 83–3464 Filed 2–9–83; 8:45 am]

BILLING CODE 6351-01-M

## SECURITIES AND EXCHANGE COMMISSION

## 17 CFR Part 240

**[Release No. 34-19478; File No. S7-959]**

## Initial Information Form and Fees for Registered Nonmember Brokers and Dealers

**AGENCY:** Securities and Exchange Commission.

**ACTION:** Proposed rule amendment.

**SUMMARY:** The Commission is proposing for comment amendments to Rule 15b9–1 under the Securities Exchange Act of 1934. The proposed amendments would clarify the requirement that broker-dealers either join a registered national securities association or register as SECO (Securities and Exchange Commission Only) before transacting an over-the-counter securities business. The amendments also would reduce the allowable time period during which a newly registered broker-dealer may register as a SECO firm or apply for association membership, and the time period during which a registered broker-dealer whose association membership is terminated or whose membership application is denied or withdrawn must register as a SECO firm..

**DATE:** Comments must be received on or before March 14, 1983.

**ADDRESSES:** All communications regarding the proposed rule amendments should refer to File No. S7–959 and should be sent with six copies to George A. Fitzsimmons, Secretary, Securities and Exchange Commission, Room 6184, 450 Fifth Street, NW., Washington, D.C. 20549. All submissions will be made available for public inspection at the Commission's Public Reference Room, Room 1024, 450 5th Street, NW., Washington, D.C. 20549.

**FOR FURTHER INFORMATION CONTACT:** Howard L. Kramer, Esq., (202) 272–2411, Office of Self-Regulatory Oversight, Division of Market Regulation, Securities and Exchange Commission, 450 Fifth Street, NW., Washington, D.C. 20549.

**SUPPLEMENTARY INFORMATION:** Sections 15(b)(8) and 15(b)(9) of the Securities

Exchange Act of 1934 ("Act") are intended to ensure that those registered broker-dealers transacting an over-the-counter ("OTC") securities business who are not regulated by the National Association of Securities Dealers, Inc. ("NASD") will be directly regulated under the Commission's SECO program.[1] Pursuant to these sections, the Commission adopted Rule 15b9-1 ("Rule")[2] to require registered broker-dealers who are not members of the NASD and who transact an OTC securities business to register with the Commission as a SECO firm by filing Form SECO-5, the Initial Assessment and Information Form, and pay the fee prescribed by that form.[3] Form SECO-5 enables the Commission to monitor which broker-dealers enter the SECO program and to collect the initial assessments from those broker-dealers necessary to cover, in part, the cost of administering the SECO program.

As currently drafted, a literal reading of the Rule requires that a broker-dealer, within 45 days after registration with the Commission,[4] either submit in application for membership to the NASD or register as a SECO broker-dealer before transacting an OTC securities business. Thus, the Rule may be read as permitting a broker-dealer, even though its application for NASD membership eventually may be rejected or withdrawn, to conduct an OTC securities business during the time period his application is being reviewed.[5] Although acceptance to NASD membership frequently may be delayed for months because of the need to pass the appropriate qualifications examinations, the Rule appears to allow a broker-dealer to conduct business during this period.[6] In addition, the Rule allows a broker-dealer transacting an OTC securities business whose membership application to the NASD is denied or withdrawn, or whose NASD membership is terminated, to continue to conduct an OTC securities business for up to 45 days before the broker-dealer must register as SECO. Therefore, a broker-dealer could conduct an OTC securities business for a significant period of time in these situations without being regulated by the NASD or filing the Form SECO-5 with the Commission.

To correct this deficiency, the Commission traditionally has interpreted the Rule to require actual membership in a registered national securities association or registration as a SECO broker-dealer before a broker-dealer could transact an OTC securities business. Accordingly, in order to clarify this interpretation the Commission is proposing to amend the Rule.

As part of the amendments to the Rule, the Commission also proposes reducing the time available for filing a Form SECO-5 or a NASD membership application in order to lessen the period of uncertainty regarding whether broker-dealer will apply to become SECO broker-dealers or NASD members. The Rule currently gives new registrants 45 days to file a Form SECO-5 or apply for NASD membership. In light of the planning and preparation necessary to establish a broker-dealer business, the Commission believes that a broker-dealer should know by the time it files a Form BD whether it plans to join the NASD or become a SECO broker-dealer, and that, in any event, the decision should not require more than five days once its registration as a broker-dealer becomes effective. Similarly, once a broker-dealer voluntarily withdraws its application for NASD membership the decision whether to become either a SECO broker-dealer or withdraw its registration as a broker-dealer should not require more than five days.

The proposed amendments also would reduce from 45 to 30 days the period in which a broker-dealer whose membership application to the NASD is denied or whose membership is terminated must submit a Form SECO-5. Although a shorter time period than the current 45 day period seems appropriate because of the prohibition against transacting an OTC securities business until Form SECO-5 is filed, a longer period than the five days proposed for newly registered broker-dealers would be allowed because of a broker-dealer's difficulty in forecasting a denial or termination of its NASD membership and the possible need to make major business decisions about the firm's future.

## I. Description of the Revised Rule

### *A. Newly Registered Broker-Dealers*

1. *Requirements Before Transacting an OTC Securities Business.* The Rule would be amended to state that a newly registered broker-dealer must be accepted by the NASD or register as a SECO broker-dealer before conducting an OTC securities business. Under the proposed amendment, a newly registered broker-dealer would have three options regarding its SECO/NASD obligations. First, it can file a Form SECO-5 and pay the applicable fee, and then conduct an OTC business. Second, it can file an application for membership in the NASD, but cannot transact an OTC business until its membership is effective.[7] Third, it can file an application for membership in the NASD and, while the application is pending, it can file a Form SECO-5 with the Commission and pay the prescribed fee, thus allowing it to transact an OTC business.

The proposed amendment reflects the interpretation the Commission historically has applied to the Rule. Because the proposed amendment does not alter the substance of the Rule, but only codifies the Commission's interpretation of its effect, the Commission does not believe that the amendment would pose any new regulatory burdens.

2. *Filing Requirements.* The proposed amendments would reduce from 45 to 5 days the period of time a newly registered broker-dealer has to apply for membership in the NASD or to register as a SECO broker-dealer by filing a Form SECO-5. A registered broker-dealer still would be prohibited from transacting an OTC securities business until it has been accepted from NASD membership or registered as a SECO

[1] SECO broker-dealers are those registered broker-dealers transacting an OTC securities business, including business on a securities exchange of which they are not members, who choose not to join the NASD.

[2] *See*, Securities Exchange Act Release No. 8308 (May 8, 1968), 38 FR 7076 (May 11, 1968) and the Rule's last amendment in Securities Exchange Act Release No. 12468, 41 FR 22825 (May 20, 1976). The Rule exempts from its requirements a broker-dealer that (1) only effects securities transactions on a national securities exchange of which it is a member or (2) has an annual gross securities income of up to $1,000 derived from purchases and sales of securites otherwise than on a national securities exchange of which it is a member, if it is a member of a national securities exchange and carries no customer accounts.

[3] Under the SECO program the Commission is responsible for such things as ensuring that associated persons meet the necessary professional qualifications, holding introductory conferences with new broker-dealers, and conducting periodic inspections of broker-dealer businesses.

[4] This is accomplished by filing Form BD, the application for registration as a broker-dealer.

[5] Even though a broker-dealer has not filed a Form SECO-5, it is, pursuant to Sections 15(b)(8) and 15(b)(9), subject to all the rules and regulations of the SECO program. In particular, Rule 15b8-1 under the Act, in effect, requires the associated persons of a broker-dealer not a member of the NASD to pass the SECO qualifications examinations before the firm begins an OTC securities business. Nevertheless, unless the Form SECO-5 is filed it is difficult for the Commission to determine whether these firms are in compliance with the SECO rules as well as other applicable provisions of the federal securities laws.

[6] For example, the NASD requires a member to have two registered principals. It is not unusual for a new broker-dealer's principals to take months to pass all the necessary qualifications examinations.

[7] A broker-dealer can submit an application for NASD membership before its Form BD has been declared effective, but that application can not be approved until its broker-dealer registration with the Commission is effective.

broker-dealer, even during the five-day grace period. The change should not impose significant burdens on new broker-dealers because a broker-dealer should know, at least by the time it files its Form BD, whether it will join SECO or the NASD. Nevertheless, because the actual date when a broker-dealer's registration will be declared effective is unknown at the time Form BD is filed,[8] the proposed amendment will provide a broker-dealer with a five day grace period following the effective date of its registration in which to file a Form SECO–5 or apply for NASD membership.

*B. Denial, Withdrawal, or Termination of NASD Membership*

1. *Requirements Before Transacting Business.* In addition, the Commission proposes to amend the Rule to require that a registered broker-dealer whose application for membership in the NASD is denied or withdrawn, or whose membership has been terminated, to register as a SECO broker-dealer before conducting an OTC securities business. Alternatively, such a broker-dealer could immediately discontinue its securities activities and file a Form BDW (Notice of Withdrawal From Registration). This changes the current wording of the Rule which might appear to permit a broker-dealer to continue conducting a securities business after such denial, withdrawal, or termination, but before registering as a SECO broker-dealer so long as it registers as a SECO broker-dealer within 45 days. Such a broker-dealer, in effect, would be outside effective NASD/SECO oversight for up to 45 days,[9] even though the broker-dealer may not be qualified to conduct a securities business.[10]

As with the amendments concerning newly registered broker-dealers, this amendment reflects the Commission's traditional interpretation of the Rule. Because the amendment will not alter the substance of the Rule, but only codify the Commission's interpretation, it does not impose any new regulatory burdens.[11]

2. *Filing Requirements.* The proposed amendments would reduce from 45 to 30 days the period of time in which a registered broker-dealer whose application for membership to the NASD is denied, or whose membership is terminated, must register as a SECO broker-dealer.[12] A broker-dealer still would be prohibited from transacting an OTC business until it registered as a SECO broker-dealer, even during the 30 day grace period. Although a broker-dealer may need some time to file its Form SECO–5 after a denial or termination, the current 45 day grace period appears unnecessarily long and prevents the Commission from effectively monitoring those SECO broker-dealers for over six weeks. Because of the difficulty of forecasting a denial or termination of membership, however, the filing period will be reduced to 30 days. Nevertheless, in the case of a voluntary withdrawal of a membership application in the NASD, the period in which to file a Form SECO–5 will be reduced from 45 to 5 days due to the ability of a broker-dealer to determine in advance the withdrawal of its application.

## II. Conclusion

The Commission believes that these proposed amendments will clarify a broker-dealer's compliance responsibilities regarding the requirement of NASD membership or SECO registration before conducting an OTC securities business and will enhance the Commission's monitoring of such compliance.

## List of Subjects in 17 CFR Part 240

Reporting and recordkeeping requirements, Securities.

## III. Text of Amendments

The Securities and Exchange Commission, pursuant to the Act, and particularly Sections 2, 15, 17, and 23 thereof (15 U.S.C. §§ 78b, 78o, 78q and 78w), hereby proposes to amend Rule 15b9–1. Accordingly, 17 CFR Part 240 is proposed to be amended as follows:

## PART 240—GENERAL RULES AND REGULATIONS, SECURITIES EXCHANGE ACT OF 1934.

1. By revising paragraphs (a), (b), and (d) and redesignating and revising paragraph (f) as paragraph (e) of § 240.15b9–1 as follows:

**§ 240.15b9–1 Prohibition against transacting any over-the-counter securities business unless registered as SECO or a member of a registered national securities association.**

(a) No broker or dealer who becomes registered as a broker or dealer with the Commission shall effect any transaction in, or induce the purchase or sale of, any security, otherwise than on a national securities exchange of which it is a member, unless such broker or dealer is a member of a registered national securities association or files a Form SECO–5 with the Commission and pays the fee prescribed by that form. Every broker or dealer, unless exempt under paragraph (d) of this rule, shall, within five days of registration with the Commission, make a bona fide application for membership to a registered securities association or file a Form SECO–5 and pay the application fee.

(b) Every registered broker or dealer, unless exempt under paragraph (d) of this rule, whose application for membership in a registered national securities association has been denied, or whose membership has been terminated for any reason, and who has not immediately filed a Form BDW (Notice of Withdrawal from Registration) shall, within 30 days of such denial or termination, file a Form SECO–5 with the Commission and pay the fee prescribed by that form. Every registered broker or dealer, unless exempt under paragraph (d) of this rule, whose application for membership in a registered national securities association is withdrawn, and who has not immediately filed a Form BDW, shall, within five days of such withdrawal, file Form SECO–5 with the Commission and pay the fee prescribed by that form. A registered broker or dealer shall not effect any transaction in, or induce the purchase or sale of, any security, otherwise than a national securities exchange of which it is a member, after such denial, termination or withdrawal, until such broker or dealer files a Form SECO–5 with the Commission and pay the fee prescribed by that form.

* * * * *

(d) Any nonmember broker or dealer who is a member of a national securities exchange shall be exempt from this rule if (1) it effects securities transactions solely on a national securities exchange of which it is a member, or (2) it carries no accounts for customers and its annual gross income derived from purchases and sales of securities otherwise than on a national securities exchange of which it is a member is in

[8] Pursuant to Section 15(b)(1) of the Act, the Commission within 45 days of the filing by a broker-dealer of a registration form must either grant registration or institute proceedings to determine whether registration should be denied.

[9] As with newly registered broker-dealers whose application for NASD membership has not been made effective, these broker-dealers still are subject to the SECO rules and regulations.

[10] If a broker-dealer is expelled or suspended from the NASD for conduct inconsistent with just and equitable principles of trade, then Rule 15b8–2 of the Act disqualifies him from engaging in securities activities.

[11] In this regard, it should be noted that, although the Commission has recommended that Congress adopt legislation which would eliminate the SECO program, the Commission still believes it is appropriate to clarify the requirements of that program pending Congressional action with respect to the proposed legislation.

[12] Alternatively, a broker-dealer could immediately discontinue its securities activities and file a Form BDW.

an amount no greater than $1,000, *Provided, however,* That gross income derived from transactions otherwise than on such national securities exchange which are effected for its own account with or through another registered broker or dealer shall not be subject to such limitation.

(e) For purposes of this rule:

(1) The term "nonmember broker or dealer" shall mean any broker or dealer registered under Sections 15 or 15B of the Act who is not a member of a registered national securities association.

By the Commission.

George A. Fitzsimmons,

*Secretary.*

February 1, 1983.

**Regulatory Flexibility Act Certification**

I, John Shad, Chairman of the Securities and Exchange Commission, hereby certify pursuant to 5 U.S.C. 605(b) that the proposed amendments to Rule 15b9-1 set forth in Securities Exchange Act Release No. 19478, if promulgated, will not have a significant impact on a substantial number of small broker-dealers. Specifically, the amendments merely 1) codify the Commission's interpretation of the rule requiring that a broker-dealer be registered as SECO or a member of the National Association of Securities Dealers, Inc. ("NASD"), before transacting any over-the-counter securities business and 2) revise the time periods for filing the initial SECO form or NASD membership application.

John S.R. Shad,

*Chairman.*

February 1, 1983.

[FR Doc. 83-3605 Filed 2-9-83; 8:45 am]

BILLING CODE 8010-01-M

## DEPARTMENT OF HEALTH AND HUMAN SERVICES

### Social Security Administration

### 20 CFR Part 416

**[Regulations No. 16]**

### Supplemental Security Income for the Aged, Blind, and Disabled; Eligibility

**AGENCY:** Social Security Administration, HHS.

**ACTION:** Notice of proposed rulemaking.

**SUMMARY:** We plan to amend our regulations that implement section 1611(e)(1)(A) of the Social Security Act which states that individuals who are residents of a public institution throughout a month are not eligible for Supplemental Security Income (SSI) benefits for such month. Section 416.201 of our regulations defines a resident of a public institution and excepts from the status of resident of a public institution individuals living in a public educational institution and enrolled in or registered for the educational or vocational training provided by the institution. We propose to amend this section to make it clear that, in order for an individual who is a resident of a public educational institution to come within the exception, the individual must be in the public educational institution primarily to receive educational or vocational training. Further, educational or vocational training will be defined as a recognized program to acquire knowledge or skills to prepare for gainful employment and the definition will state that the term does not include training limited to acquisition of basic life skills.

**DATE:** Written comments must be received by April 11, 1983.

**ADDRESSES:** Comments should be submitted in writing to the Commissioner of Social Security, Department of Health and Human Services, P.O. Box 1585, Baltimore, Maryland 21203, or delivered to the Office of Regulations, Social Security Administration, 3-B-4 Operations Building, 6401 Security Boulevard, Baltimore, Maryland 21235, between 8:00 a.m. and 4:30 p.m. on regular business days. Comments received may be inspected during these same hours by making arrangements with the contact person shown below.

**FOR FURTHER INFORMATION CONTACT:** Rita Hauth, Legal Assistant, 3-B-4 Operations Bldg. 6401 Security Boulevard, Baltimore, Maryland 21235, (301) 594-7460.

**SUPPLEMENTARY INFORMATION:** We plan to revise our rules to clarify the conditions under which a resident of a public educational institution may be eligible for Supplemental Security Income (SSI) benefits. Section 1611(e)(1)(A) of the Social Security Act provides that individuals who are residents of public institutions throughout a month are not eligible for SSI benefits for such month. Section 416.201 of our existing regulations defines a resident of a public institution and this section also provides an exception to that status for individuals who are living in a public educational institution and enrolled in or registered for the educational or vocational training provided by the institution. This definition is being revised because it does not clearly state the circumstances under which individuals in public educational institutions meet the exception to status as residents of public institutions. The lack of specificity in existing regulations is resulting in the filing of applications on behalf of severely retarded individuals whose training is not preparation for gainful employment. Payment to such individuals would be contrary to the purpose of the exception to status as a resident of a public institution which is to enable individuals to become self-supporting.

We propose to amend § 416.201 by adding a definition of educational or vocational training and by rewording the definition of a resident of a public institution. We plan to define educational or vocational training as a recognized program for the acquisition of knowledge and skills to prepare individuals for gainful employment. The definition will specifically exclude training limited to the acquisition of basic life skills such as eating, dressing and toilet training. The definition of a resident of a public institution will state that status as a resident of such an institution does not apply to individuals living in public educational institutions for the primary purpose of receiving educational or vocational training as defined in the section. Thus, individuals who live in public educational institutions for the primary purpose of acquiring educational or vocational training that will prepare them for gainful employment and who meet all other requirements for eligibility will be eligible for SSI benefits. The proposed amendments to the regulations are consistent with our interpretation of the existing regulations.

**Regulatory Procedures**

*Executive Order 12291* and *Regulatory Flexibility Act:* These regulations merely clarify existing policy and will result in no change in SSI eligibility. Therefore, the Secretary has determined that this document is not a major rule as described by Executive Order 12291, because it does not meet any of the criteria set forth in section 1 of the Executive Order. Further, the Secretary certifies that these regulations will not have a significant economic impact on a substantial number of small entities and do not require a regulatory flexibility analysis as provided for in Public Law 96-345, the Regulatory Flexibility Act of 1980.

*Paperwork Reduction Act:* These regulations impose no additional reporting or recordkeeping requirements requiring OMB clearance.

(Catalog of Federal Domestic Assistance Program No. 13.807, Supplemental Security Income Program)

**List of Subjects in 20 CFR Part 416**

Administrative practice and procedure, Aged, Blind, Disabled, Public assistance programs, Supplemental Security Income (SSI).

Dated: November 16, 1982.

**John A. Svahn,**

*Commissioner of Social Security.*

Approved: January 24, 1983.

**Richard S. Schweiker,**

*Secretary of Health and Human Services.*

## PART 416—[AMENDED]

Part 416 of Title 20 of the Code of Federal Regulations is amended as follows:

1. The authority citation for Subpart B is revised to read as follows:

**Authority:** Secs. 1102, 1602, 1611, 1614, and 1631 of the Social Security Act as amended, Secs. 211 and 212 of Pub. L. 93-66, 49 Stat. 647 as amended, 86 Stat. 1465, 86 Stat. 1466, 86 Stat 1471, 86 Stat. 1475, 87 Stat. 154, and 87 Stat. 155, (42 U.S.C. 1302, 1381a, 1382, 1382c, and 1383).

2. In § 416.201 a definition of "Educational or vocational training" is added and the definition of "Resident of a public institution" is revised to read as follows:

**§ 416.201 General definitions and terms used in this subpart.**

* * * * *

"Educational or vocational training" means a recognized program for the acquisition of knowledge or skills to prepare individuals for gainful employment. For purposes of these regulations, educational or vocational training does not include programs limited to the acquisition of basic life skills including but not limited to eating and dressing.

* * * * *

"Resident of a public institution" means a person who can receive substantially all of his or her food and shelter while living in a public institution. The person need not be receiving treatment and services available in the institution and is a resident regardless of whether the resident or anyone else pays for all food, shelter, and other services in the institution. A person is excepted from the status of a resident of a public institution if he or she is living in a public educational institution for the primary purpose of receiving educational or vocational training as defined in this section. A "resident" of a public institution means the same thing as an "inmate" of a public institution as used in section 1611(e)(1)(A) of the Social Security Act.

* * * * *

[FR Doc. 83-3697 Filed 2-9-83; 8:45 am]

BILLING CODE 4190-11-M

---

## DEPARTMENT OF THE TREASURY

## Internal Revenue Service

## 26 CFR Part 1

**[LR-254-81]**

## 3-Year Averaging for Increases in Inventory Value; Proposed Rulemaking

**AGENCY:** Internal Revenue Service, Treasury.

**ACTION:** Notice of proposed rulemaking.

**SUMMARY:** This document contains proposed regulations under section 472 of the Internal Revenue Code of 1954 relating to 3-year averaging for increases in inventory value. Changes in the applicable tax law were made by the Economic Recovery Tax Act of 1981. These regulations would provide the public with guidance needed to comply with the act and would affect taxpayers first adopting the Last-In-First-Out (LIFO) inventory method for taxable years beginning after December 31, 1981.

**DATES:** Written comments and requests for a public hearing must be delivered or mailed by April 11, 1983. The amendments are proposed to be effective with respect to taxable years beginning after December 31, 1981.

**ADDRESS:** Send comments and requests for a public hearing to: Commissioner of Internal Revenue, Attention: CC:LR:T, (LR-254-81), Washington, D.C. 20224.

**FOR FURTHER INFORMATION CONTACT:** Mr. Gregory A. Roth of the Legislation and Regulations Division, Office of Chief Counsel, International Revenue Service, 1111 Constitution Avenue, NW., Washington, D.C. 20224 (Attention: CC:LR:T) (202-566-3238, not a toll-free munber).

**SUPPLEMENTARY INFORMATION:**

### Background

This document contains proposed amendments to the Income Tax Regulations (26 CFR Part 1) under section 472(d) of the Internal Revenue Code of 1954. These amendments are proposed to conform the regulations to section 236 of the Economic Recovery Tax Act of 1981 (95 Stat. 172) and are to be issued under the authority contained in sections 472(d) and 7805 of the Internal Revenue Code of 1954 (26 U.S.C. 472(d) and 7805).

### Inventory Valuation

Section 472(d) requires opening inventory of the taxable year for which the LIFO method is first used to be valued at cost. Restoration shall be made with respect to any writedown to market values resulting from the pricing of former inventories. Such restoration amount shall be taken into account ratably in each of the three taxable years beginning with the first taxable year for which the LIFO method is used.

### Comments and Requests for a Public Hearing

Before adopting these proposed regulations consideration will be given to any written comments that are submitted (preferably seven copies) to the Commissioner of Internal Revenue. All comments will be available for public inspection and copying. A public hearing will be held on written request to the Commissioner by any person who has submitted written comments. If a public hearing is held, notice of the time and place will be published in the **Federal Register.**

### Special Analyses

The Commissioner of Internal Revenue has determined that this proposed rule is not a major rule as defined in Executive Order 12291. Accordingly a Regulatory Impact Analysis is not required. Although this document is a notice of proposed rulemaking that solicits public comment, the Internal Revenue Service has concluded that the notice and public procedure requirements of 5 U.S.C. 553 do not apply because the rules proposed are interpretative. Accordingly, a Regulatory Flexibility Analysis is not required.

### Drafting Information

The principal author of these proposed regulations is Gregory A. Roth of the Legislation and Regulations Division of the Office of Chief Counsel, Internal Revenue Service. However, personnel from other offices of the Internal Revenue Service and Treasury Department participated in developing the regulations, both on matters of substance and style.

### List of Subjects in 26 CFR 1.441-1-1.483-2

Income taxes, Accounting, Deferred Compensation plans.

*Proposed amendments to the regulations.*

Accordingly, the Income Tax Regulations (26 CFR Part 1) under section 472 of the Internal Revenue Code of 1954 are amended as follows:

## PART 1—[AMENDED]

### Income Tax Regulations

Section 1.472–2 is amended as follows:

1. Paragraph (c) is revised to read as set forth below.

2. Paragraph (f) is removed.

**§ 1.472–2 Requirements incident to the adoption and use of LIFO inventory method.**

* * * * *

(c)(1) Goods of the specified type included in the opening inventory of the taxable year for which the method is first used shall be considered as having been acquired at the same time and at a unit cost equal to the actual cost of the aggregate divided by the number of units on hand. The actual cost of the aggregate shall be determined pursuant to the inventory method employed by the taxpayer under the regulations applicable to the prior taxable year with the exception that restoration to the opening inventory of the taxable year for which the LIFO method is first used shall be made with respect to any writedown to market values resulting from the pricing of former inventories.

(2) In the case of a taxpayer first using the LIFO method before January 1, 1982, goods of the specified type on hand as of the close of the taxable year preceding the taxable year for which this inventory method is first used shall be included in the taxpayer's closing inventory for such preceding taxable year at a cost determined in the manner prescribed in paragraph (c) (1) of this section.

(3) In the case of a taxpayer first using the LIFO method after December 31, 1981—

(i) The amount arising from the restoration referred to in paragraph (c) (1) of this section shall be included in the taxpayer's gross income ratably in each of the three taxable years beginning with the taxable year for which the LIFO method is first used.

(ii) Neither an adjustment to the closing inventory nor an amended return shall be required for the taxable year preceding the taxable year for which the LIFO method is first used.

(iii) The provisions of paragraph (c) (3) of this section may be illustrated by the following example:

*Example.* X, a calendar year taxpayer, first adopts the LIFO method for 1982 and the closing inventory for 1981 included a writedown to market values of $9,000. Such writedown amount shall be restored to the 1982 opening inventory and $3,000 shall be included in X's gross income in each of the taxable years 1982, 1983, and 1984.

* * * * *

Roscoe L. Egger, Jr.,
*Commissioner of Internal Revenue.*

[FR Doc. 83–3699 Filed 2–9–83; 8:45 am]
BILLING CODE 4830–01–M

---

## DEPARTMENT OF TRANSPORTATION

### Coast Guard

### 33 CFR Part 100

[CGD12–83–01]

### Marine Parade; Pacific Inter-Club Yacht Association Opening Day Parade on San Francisco Bay

**AGENCY:** Coast Guard, DOT.

**ACTION:** Notice of proposed rule making.

**SUMMARY:** The Coast Guard is considering a proposal to establish special local regulations for the annual Pacific Inter-Club Yacht Association Opening day Parade on San Francisco Bay. The purpose is to control vessel traffic in designated areas and within the vicinity of the marine parade. This rule is necessary due to the confined areas involved and the anticipated vessel congestion during the event.

**DATES:** Comments must be received on or before March 14, 1983.

**ADDRESSES:** Comments should be mailed to Commander (bt), Twelfth Coast Guard District, Government Island, Alameda, CA 94501. The comments will be available for inspection and copying at the Boating Technical Branch, Twelfth Coast Guard District, Government Island, Alameda, CA, Building 50. Normal office hours are between 8 a.m. and 4 p.m., Monday through Friday, except holidays. Comments may also be hand-delivered to this address.

**FOR FURTHER INFORMATION CONTACT:** Lieutenant Commander Robert A. Byers, c/o Commander (bt), Twelfth Coast Guard District, Government Island, Alameda, CA 94501, (415) 273–6193 of (415) 437–3309.

**SUPPLEMENTARY INFORMATION:** Interested persons are invited to participate in this rule by submitting written views, data, or arguments. Persons submitting comments should include their names and addresses, identify this notice (CGD12–83–01) and the specific section of the proposal to which their comments apply, and give reasons for each comment. Receipt of comments will be acknowledged if a stamped self-addressed postcard or envelope is enclosed. The rules may be changed in light of comments received. All comments received before the expiration of the comment period will be considered before final action is taken on this proposal. No public hearing is planned, but one may be held if written requests for a hearing are received and it is determined that the opportunity to make oral presentations will aid the rulemaking process. The short comment period is necessary to provide sufficient time for publication of the Final Rule before April 24, 1983.

### Drafting Information

The drafters of this notice are LCDR Robert A. BYERS, Project Officer, Twelfth Coast Guard District, Boating Technical Branch and LT Charles A. AMEN, Project Attorney, Twelfth Coast Guard District Legal Office.

### Discussion of Proposed Regulation

The annual Opening Day Parade on San Francisco Bay sponsored by the Pacific Inter-Club Yacht Association of Northern California is traditionally scheduled for the last Sunday in April. Due to the large number of participating and spectator vessels experienced in past Opening Day Parades, it is anticipated that there will be considerable vessel congestion at the time of the parade. In order to provide for the safety of life and property in the parade area, the Coast Guard proposes regulations to govern specified regulated areas in Raccoon Strait and the San Francisco Bay adjacent to the San Francisco shore west of the tip of Aquatic Park Peninsula, as well as all vessels in transit on the parade route.

By the authority contained in Title 46 U.S.C. 454, as implemented by Title 33, Part 100 U.S. Code of Federal Regulations, a special local regulation controlling navigation on the waters described is promulgated. By the same authority, the waters involved will be patrolled by vessels of the U.S. Coast Guard. Coast Guard Officers and/or Petty Officers will enforce the regulation and cite persons and vessels in violation.

Because of the annual nature of the parade, the Coast Guard proposes to promulgate a permanent amendment to Part 100 of Title 33, U.S. Code of Federal Regulations and thereafter provide the public with full and adequate notice of the annual parade by publication in the Local Notices to Mariners.

### Economic Assessment and Certification

This proposed regulation is considered to be nonsignificant in accordance with DOT Policies and Procedures for Simplification, Analysis,

and Review of Regulations (DOT Order 2100.5). Its economic impact is expected to be minimal since it involves negligible cost and will not have significant impact on recreational vessels, commercial vessels or other marine interests. Based upon this assessment it is certified in accordance with section 605(b) of the Regulatory Flexibility Act (5 U.S.C. 605(b)), that this regulation, if promulgated, will not have a significant economic impact on a substantial number of small entities. Also, the regulation has been reviewed in accordance with Executive Order 12291 of February 1,7, 1981, on Federal Regulation and had been determined not to be a major rule under the terms of that order.

List of Subjects in 33 CFR Part 100

Marine safety, Navigation (water).

## PART 100—[AMENDED]

*Proposed Regulation*

In consideration of the foregoing, the Coast Guard proposes to amend Part 100 of Title 33, Code of Federal Regulations, by adding § 100.35–1201 to read as follows:

**§ 100.35–1201 Opening Day Marine Parade, San Francisco Bay.**

(a) This section is effective from 0900 to 1400 PST, 24 April 1983 and thereafter annually on the last Sunday in April as published in the Local Notices to Mariners.

(b) The following areas are designated "regulated areas" during the marine parade.

(1) Northern Area in Raccoon Strait. The area between a line drawn from Bluff Points on the southeastern side of Tiburon Peninsula to Point Campbell on the northern edge of Angel Island, and a line drawn from Peninsula Point on the southern edge of Tiburon Peninsula to Point Stuart on the western edge of Angel Island.

(2) Southern Area. The area defined by a line drawn from Fort Point (37°48′40″ N, 122°28′34″ W) 079°T approximately 5,000 yards to a point located at 37°49′09″N, 122°25′28″ W thence 173°T to the tip of Aquatic Park Peninsula (37°48′39″ N, 122°25′24″ W).

(c) Regulation:

(1) All vessels entering the regulated areas shall he parade route and maintain an approximate speed of six knots.

(2) All vessels in the Raccoon Strait area shall proceed in a generally southwesterly direction except in that area immediately adjacent to the shore of Angel Island where vessels may transit in a northeasternly direction.

(3) Vessels departing the San Francisco Yacht Harbor in the southern area may exit through the area subject to direction of Coast Guard patrol boats.

(4) The parade will be interrupted, as necessary, to permit the passage of commercial vessel traffic.

(5) All vessel in the vicinity of the parade shall comply with the instructions of the U.S. Coast Guard patrol personnel.

(46 U.S.C. 454, 49 U.S.C. 1655(b); 33 CFR 100.35, 49 CFR 1.46(b))

Dated: February 3, 1983.

E. L. Cope,

*Captain, Coast Guard, Acting Commander, Twelfth Coast Guard District.*

[FR Doc. 83–3611 Filed 2–9–83; 8:45 am]

BILLING CODE 4910–14–M

---

## 33 CFR Part 110

**[CGD8–82–19]**

## Anchorage Grounds, Mississippi River Below Baton Rouge, LA, Including South and Southwest Passes

**AGENCY:** Coast Guard, DOT.

**ACTION:** Notice of proposed rulemaking.

**SUMMARY:** The Coast Guard is considering amending the anchorage regulations on the Lower Mississippi River by permanently establishing two anchorages in the vicinity of Venice, Louisiana, to be called the Lower Venice Anchorage and the Upper Venice Anchorage. This action is necessary to provide needed additional anchorage space for deep draft vessels.

**DATE:** Comments must be received on or before March 28, 1983.

**ADDRESS:** Comments should be mailed to Captain of the Port, New Orleans, LA, U.S. Coast Guard, 4640 Urquhart Street, New Orleans, LA 70117. The comments will be available for inspection or copying at the above address. Normal office hours are between 7:00 a.m. and 3:30 p.m., Monday through Friday, except holidays. Comments may also be hand-delivered to this address.

**FOR FURTHER INFORMATION CONTACT:** LCDR R. E. Ford Port Safety Officer, Captain of the Port, New Orleans, LA, U.S. Coast Guard, 4640 Urquhart Street, New Orleans, LA 70117, Tel: (504) 589–7118.

**SUPPLEMENTARY INFORMATION:** Interested persons are invited to participate in this rulemaking by submitting written views, data, or arguments. Persons submitting comments should include their names and addresses, identify this notice (CGD8–82–19), the specific section of the proposal to which their comments apply, and give the reasons for each comment. Receipt of comments will be acknowledged if a stamped self-addressed postcard or envelope is enclosed.

These rules may be changed in light of comments received. All comments received before the expiration of the comment period will be considered before final action is taken on this proposal. No public hearing is planned, but one may be held if written requests for a hearing are received and it is determined that the opportunity to make oral presentations will aid the rulemaking process.

### Drafting Information

The principal persons involved in drafting this notice are LT M. W. Brown, Project Officer, c/o Commander, Eighth Coast Guard District (mps) and LT J. C. Helfrich, Project Attorney, c/o Commander, Eighth Coast Guard District (dl), Hale Boggs Federal Bldg., 500 Camp Street, New Orleans, LA 70130.

### Discussion of Proposed Rule

In 1978, Congress directed the U.S. Army Corps of Engineers to establish and maintain, subject to available funding, an adequate anchorage in the vicinity of Pilottown, Louisiana. At that time there already existed an anchorage at Pilottown from mile 1.5 AHOP to mile 6.7 AHOP on the right descending bank. Much of this anchorage was and still is unusable to deep draft vessels, however, due to a severe shoaling problem in the area. Because of this, the U.S. Army Corps of Engineers investigated three possible solutions to the problem. The three possible solutions were:

1. Dredging the existing Pilottown Anchorage to a 40-foot depth with a width of from 1400 to 1600 feet.

2. Dredging the existing Pilottown Anchorage to a 40-foot depth with a uniform width of 1000 feet.

3. Creation of a new anchorage area approximately 1.5 miles upriver on the left descending bank with no dredging required as the location already had a 40-foot depth.

The Corps of Engineers determined that the most feasible plan from an economic and environmental point of view was the creation of a new anchorage area from approximately mile 8.0 AHOP to mile 11.2 AHOP, and in July of 1982, requested that the Coast Guard issue the appropriate regulations to establish an anchorage in that location.

The Coast Guard evaluated the request and determined that the establishment of an anchorage area as

proposed by the Corps of Engineers was in the best interest of safety but that a modification was necessary due to a pipeline crossing the Lower Mississippi river at mile 9.8 AHOP. Accordingly, the District Commander established two temporary anchorages, a Lower Venice Temporary Anchorage and an Upper Venice Temporary Anchorage. The Lower Venice Temporary Anchorage is located from mile 8.0 AHOP to mile 9.7 AHOP and has the capacity to handle 5 deep-draft vessels. The Upper Venice Temporary Anchorage is located from mile 9.9 AHOP to mile 11.2 AHOP and has the capacity to handle 4 deep-draft vessels. Both anchorages are along the left descending bank, and have a western or channelward limit of 1200 feet as measured from the right descending bank. Both anchorages have a minimum effective width of 900 feet. The proposed rules will make these temporary anchorages permanent and the location of the permanent anchorages will be the same as the temporary ones. Establishment of these anchorages is desirable in that they will provide needed, sheltered, deep-draft anchorage space on the Mississippi River, for vessels awaiting berths upriver. Without these anchorages those vessels would have to anchor in the Fairway Anchorage in relatively unprotected water. In addition, because vessels will be able to anchor closer to facilities, decreased travel times, and hence lower costs will result. Also, vessels would be in closer proximity to fueling, supply and repair services. The anchorages are located in reasonably straight stretches of the river and no user conflicts are anticipated.

**Summary of Draft Evaluation**

The proposed regulations are considered to be nonsignificant in accordance with guidelines set out in the Policies and Procedures for Simplification, Analysis, and Review of Regulations (DOT Order 2100.5 of 5-22-80). An economic evaluation of the proposal has not been conducted since its impact is expected to be minimal. It is believed, however, that any economic impacts will be positive as the existence of this anchorage decreases vessel transit times and provides better accessibility to services. The U.S. Army Corps of Engineers has conducted an Environmental Assessment for the Project and has prepared a Finding of No Significant Impact. It is also certified that in accordance with Section 605(b) of the Regulatory Flexibility Act, that these rules, if promulgated, will not have a significant impact on a substantial number of small entities.

**List of Subjects in 33 CFR Part 110**

Anchorage grounds.

*Proposed Regulations:* In consideration of the foregoing, the Coast Guard proposes to amend Part 110 of Title 33, Code of Federal Regulations, as follows:

## PART 110—ANCHORAGE REGULATIONS

1. By adding new paragraphs (a)(1a) and (a)(1b) to § 110.195 as follows:

**§ 110.195 Mississippi River below Baton Rouge, LA, including South and Southwest Passes.**

(a) * * *

(1a) Lower Venice Anchorage. An Area 1.7 miles in length along the left descending bank of the river from mile 8.0 to mile 9.7 above Head of Passes with the west limit 1200 feet from the ALWP of the right descending bank.

(1b) Upper Venice Anchorage. An area 1.3 miles in length along the left descending bank of the river from mile 9.9 to mile 11.2 above Head of Passes with the west limit 1200 feet from the ALWP of the right descending bank.

* * * * *

(33 U.S.C. 471; 49 U.S.C. 1655(g)(1); 49 CFR 1.46(c)(1); 33 CFR 1.05-1(g))

Dated: January 21, 1983.

**W. H. Stewart,**

*Rear Admiral, Coast Guard, Commander, Eighth Coast Guard District.*

[FR Doc. 83-2936 Filed 2-9-83; 8:45 am]

BILLING CODE 4910-14-M

---

**33 CFR Part 117**

**[CGD9-83-01]**

## Drawbridge Operation Regulations; Sheboygan River, Wisconsin

**AGENCY:** Coast Guard, DOT.

**ACTION:** Proposed rule.

**SUMMARY:** At the request of the City of Sheboygan, Wisconsin, the Coast Guard is considering revising the regulations governing the operation of the 8th Street highway bridge, mile 0.69, over the Sheboygan River in Sheboygan, Wisconsin, by permitting the City of Sheboygan to only open the draw of the 8th Street bridge every 20 minutes (10 minutes before the hour, 10 minutes after the hour and on the half-hour) from 6 a.m. to 10 p.m., Monday through Saturday; on Sundays and legal holidays the bridge will be opened on signal. The existing requirement to open the draw on signal after receipt of a two hour advance notice, between the hours of 10 p.m. and 6 a.m., will be retained. The requirement to open the draw upon receipt of a two hour advance notice at all times from October 31 through April 30 will also be retained. This change is being considered because of an increase in both marine and land traffic.

**DATE:** Comments must be received on or before March 28, 1983.

**ADDRESS:** Comments should be submitted to and are available for examination, during normal business hours, at the office of the Commander (obr), Ninth Coast Guard District, 1240 East Ninth Street, Cleveland, Ohio 44199.

**FOR FURTHER INFORMATION CONTACT:** Robert W. Bloom, Jr., Chief, Bridge Branch, United States Coast Guard, 1240 East Ninth Street, Cleveland, Ohio 44199. Telephone (216) 522-3993.

**SUPPLEMENTARY INFORMATION:** Interested persons are invited to participate in this proposed rule making by submitting written views, comments, data or arguments. Persons submitting comments should include their name and address, identify the bridge, and give reasons for concurrence with or any recommended change in this proposal. Persons desiring acknowledgement that their comment has been received should enclose a stamped self-addressed postcard or envelope.

The Commander, Ninth Coast Guard District, will evaluate all communications received and determine a course of final action on this proposal. The proposed regulations may be changed in the light of comments received.

**Drafting Instructions**

The principal persons involved in drafting this proposal are: Robert W. Bloom, Jr., Chief, Bridge Branch, Ninth Coast Guard District, and LCDR J. A. Blocher, Assistant Legal Officer, Ninth Coast Guard District.

**Discussion of Proposed Regulations**

In 1976 traffic counts taken as part of a request to establish the regulations for the 8th Street bridge, Title 33 of the Code of Federal Regulations, Part 117.652, averaged between 15,196 to 16,555 vehicles passing over the bridge per day. By 1980 the amount of vehicles crossing the bridge rose to an average of from 16,470 to 19,284 per day. Marine traffic requiring openings of the 8th Street bridge showed an increase of approximately 40% from 1976 to 1980. Also, the amount of openings increased from 3,981 in 1980 to 4,096 in 1981.

In order to evaluate the feasibility of this proposed change in operating regulations and determine if further adjustments would be required to better

serve marine and land traffic, the Commander, Ninth Coast Guard District, issued temporary operating regulations, as written in this proposal, to the City of Sheboygan, Wisconsin. The bridge was operated under the temporary regulations from 1 May 1982 through 30 October 1982. During this period of time the Coast Guard did not receive comments for or against this proposed change.

Under present regulations the draw is required to open on signal from May 1 through October 30 from 6 a.m. to 10 p.m., except that from 6 a.m. to 8 a.m., 9 a.m. to 12 noon, 1 p.m. to 4 p.m. and 6 p.m. to 7 p.m., the draw need open to navigation only on the hour, quarter-hour, half-hour and three-quarter hour. From 8 a.m. to 9 a.m., 12 noon to 1 p.m. and 4 p.m. to 6 p.m. the draw need open to navigation only on the hour and half-hour. At all other times the draw opens on signal if at least two hours advance notice is given.

**Economic Assessment and Certification**

The proposed regulations have been reviewed under the provisions of Executive Order 12291 and have been determined not to be a major rule. In addition, these proposed regulations are considered to be nonsignificant in accordance with guidelines set out in Policies and Procedures for Simplification, Analysis and Review of Regulations (DOT Order 2100.5 of 5-22-80). An economic evaluation has not been conducted since its impact is expected to be minimal. In accordance with § 605(b) of the Regulatory Flexibility Act (94 Stat. 1164), it is also certified that this rule, if promulgated, will not have a significant economic impact on a substantial number of small entities. The effects of this proposal, as described above, are expected to be minimal because the bridge is presently operating with scheduled openings for the passage of vessels. Also, the proposed regulations are expected to better serve both land and marine traffic because the proposed scheduled opening time is before and after the hour instead of on the hour when vehicle traffic is heaviest, thus eliminating delays in openings due to land traffic being cleared so the bridge can open.

**List of Subjects in 33 CFR Part 117**

Bridges.

## PART 117—DRAWBRIDGE OPERATION REGULATIONS

In consideration of the foregoing, it is proposed that Part 117 of Title 33 of the Code of Federal Regulations be amended by revising § 117.652 to read as follows:

**§ 117.652 Sheboygan River, Wis.: Eighth Street Bridge at Sheboygan, Wis.**

(a) From May 1 through October 30, from 6 a.m. to 10 p.m., including Sundays and legal holidays, the draw shall open on signal except that:

(1) From 6:10 a.m. to 7:10 p.m., Monday through Saturday, the draw need only open every 20 minutes (10 minutes after the hour, on the half-hour and 10 minutes before the hour).

(b) At all other times the draw shall open on signal if at least two hours notice is given.

(b) Public vessels of the United States, state or local government vessels used for public safety and vessels seeking shelter from rough weather shall be passed through the draws of this bridge as soon as possible even though the closed periods are in effect.

(d) The owner of or agency controlling the bridge shall keep conspicuously posted on both the upstream and downstream sides of the bridge, in such a manner that they can be easily read, a copy of the regulations in this paragraph together with a notice stating exactly how the representative may be reached in order to give a 2 hour notice during times specified in paragraph (b) of this section.

(33 U.S.C. 499, 49 U.S.C. 1655(g)(2); 49 CFR 1.46(c)(5), 33 CFR 1.05-1(g)(3))

Dated: February 2, 1983.

**Henry H. Bell,**

*Rear Admiral, Coast Guard Commander, Ninth Coast Guard District.*

[FR Doc. 83-3613 Filed 2-9-83; 8:45 am]

BILLING CODE 4910-14-M

---

**33 CFR Part 117**

**[CGD13 83-02]**

## Drawbridge Operation Regulations; Duwamish Waterway, Washington

**AGENCY:** Coast Guard, DOT.

**ACTION:** Proposed rule.

**SUMMARY:** At the request of the City of Seattle, the Coast Guard is considering a change to the regulations governing the highway drawbridge across the Duwamish West Waterway at Southwest Spokane Street, and the highway drawbridge across the Duwamish Waterway at First Avenue South, both in Seattle, Washington, by extending the existing two hour morning and afternoon closed periods by one hour each. The change would provide that the draws of these bridges need not opern for the passage of vessels between the hours of 6:00 a.m. and 9:00 a.m. and between 3:45 p.m. and 6:45 p.m., Monday through Friday, except for federal holidays. This proposal is being made because of an increase in vehicular traffic during these periods as a result of the damage to and subsequent removal of one of the bridges serving vehicular traffic in the immediate area. This action should accommodate the needs of vehicular traffic and should still provide for the reasonable needs of navigation.

**DATE:** Comments must be received on or before March 28, 1983.

**ADDRESS:** Comments should be submitted to and are available for examination from 8:00 a.m. to 4:30 p.m., Monday through Friday, except holidays, at the office of the Commander (oan), Thirteenth Coast Guard District, Room 3564, 915 Second Avenue, Seattle, Washington 98174. Comments may also be hand-delivered to this address.

**FOR FURTHER INFORMATION CONTACT:** John E. Mikesell, Chief, Bridge Section, Aids to Navigation Branch (Telephone: (206) 442-5864).

**SUPPLEMENTARY INFORMATION:** Interested persons are invited to participate in this proposed rulemaking by submitting written views, comments, data or arguments. Persons submitting comments should include their names and addresses, identify the bridge, and give reasons for concurrence with or any recommended change in the proposal. Persons desiring acknowledgment that their comments have been received should enclose a stamped, self-addressed postcard or envelope.,

The Commander, Thirteenth Coast Guard District, will evaluate all communications received and determine a course of final action on this proposal. The proposed regulations may be changed in light of comments received.

**Drafting Information**

The drafters of this notice are John E. Mikesell, project officer, and Lieutenant Commander D. Gary Beck, project attorney.

**Discussion of Proposed Regulations**

Two 4-lane highway drawbridges were constructed across the Duwamish West Waterway, mile 0.3, at Southwest Spokane Street, the north span in 1924 and the south span in 1930. The two bridges provided the main vehicular route between the West Seattle residential community and the Seattle central business area. Also, the bridges provided primary access from the west to the Harbor Island and Duwamish Basin industrial area. The First Avenue South highway drawbridge across the Duwamish River, mile 2.5, was constructed in 1955. The bridge provides north and south access to the Duwamish

Basin industrial area and the Seattle central business area. Because of the high level of vehicular traffic across these bridges during morning and evening commute hours, closed periods were established to allow for the uninterrupted flow of traffic. Regulations provided that the bridges need not open for the passage of vessels from 6:30 a.m to 8:30 a.m. and from 3:45 p.m. to 5:45 p.m., Monday through Friday, except federal holidays. However, the bridges were required to open at any time for a vessel of 5,000 tons or more.

In June 1978, a vessel collided with the northernmost of the two Southwest Spokane Street bridges severely damaging the structure. The damaged bridge was subsequently removed and vehicular traffic was rerouted over the remaining Southwest Spokane Street bridge and the First Avenue South bridge. In order to accommodate the increased traffic flow over these bridges and prevent excessive delays during peak commuting hours, a temporary departure from the regulations was granted which increased the closed periods by one hour in the morning and one hour in the evening. Under this provision, the bridges need not open for the passage of vessels from 6:00 a.m. to 9:00 a.m. and 3:45 p.m. to 6:45 p.m., Monday through Friday, except federal holidays. The temporary departure also required the bridges to open on the hour at times other than the closed periods for all vessels not subject to the vessel movement reporting rules of the Puget Sound Vessel Traffic Service (VTS), and required openings during closed periods to be authorized by the Coast Guard Captain of the Port only in an emergency. After a brief trial period, the City of Seattle determined that the requirement for openings on the hour for vessels not subject to VTS reporting rules was unmanagable. Therefore, this provision was never implemented.

The City of Seattle is presently engaged in the construction of a six-lane, high level, fixed, bridge across both the Duwamish East And West waterways at Southwest Spokane Street. When completed, this bridge will provide primary access from West Seattle to the Seattle central business area, thus relieving the traffic overflow on the existing Southwest Spokane Street and First Avenue South bridges. As an interim measure, until the new bridge is open to traffic, the City of Seattle has requested that the temporary closed periods be made permanent. Also, the City has requested that no vessels be exempted from the closed period requirement. The City sent letters to potentially affected navigation interests in the area soliciting comments on its proposal. Response to the solicitation was limited, with a few navigation interests objecting to the changes being made permanent. However, with the exception of the provision for openings on the hour for vessels not subject to VTS reporting rules, the bridges have been operated in accordance with the temporary regulations for over four years without adverse reaction from the maritime community. The Coast Guard Captain of the Port has determined, and the City of Seattle concurs, that the portion of the temporary departure which requires bridge openings to be made on the hour is no longer needed, therefore, it is not included in the proposed rule.

The proposed change would allow the City of Seattle to restrict the operation of the bridges between the hours of 6:00 a.m. and 9:00 a.m. and between 3:45 p.m. and 6:45 p.m., Monday through Friday, except for federal holidays. During these two periods of time the draws would remain in the closed position for all vessel traffic, except as authorized by proper Coast Guard authority during an emergency.

There are only minimal economic impacts on navigation and other interests. Therefore, an economic evaluation has not been prepared for this action. Users of the bridges for vehicular transportation and the City of Seattle would benefit because the proposed change eliminates a major cause of vehicular traffic delay and still provides for the reasonable needs of navigation.

### Economic Assessment and Certification

These proposed regulations have been reviewed under the provisions of Executive Order 12291 and have been determined not to be a major rule. In addition, these proposed regulations are considered to be nonsignificant in accordance with guidelines set out in the Policies and Procedures for Simplification, Analysis, and Review of Regulations (DOT Order 2100.5 of 5-22-80). As explained above, an economic evaluation has not been conducted since its impact is expected to be minimal. In accordance with section 605(b) of the Regulatory Flexibility Act (5 U.S.C. 605(b)), it is certified that these rules, if promulgated, would not have a significant economic impact on a substantial number of small entities.

### List of Subjects in 33 CFR Part 117

Bridges.

## PART 117—DRAWBRIDGE OPERATION REGULATIONS

*Proposed Regulations*

In consideration of the foregoing, the Coast Guard proposes to amend Part 117 of Title 33, Code of Federal Regulations, by revising § 117.790(f) to read as follows:

**§ 117.790 Duwamish Waterway at Seattle, Wash.; bridges.**

* * * * *

(f) The draws of each bridge across the Duwamish Waterway shall open promptly on signal except that the draws of the Southwest Spokane Street bridge and the First Avenue South bridge need not open for the passage of vessels from 6 a.m. to 9 a.m., and 3:45 p.m. to 6:45 p.m., Monday through Friday, except for federal holidays, and except as authorized by proper Coast Guard authority during an emergency.

* * * * *

(33 U.S.C. 499; 49 U.S.C. 1655(g)(2); 49 CFR 1.46(c)(5); 33 CFR 1.05-1(g)(3))

Dated: January 24, 1983.

**C. F. DeWolf,**

*Rear Admiral, Coast Guard Commander, 13th Coast Guard District.*

[FR Doc. 83-3612 Filed 2-9-83; 8:45 am]

BILLING CODE 4910-14-M

## GENERAL SERVICES ADMINISTRATION

### 41 CFR Part 105-61

**[GSA Order ADM 7900.2]**

### Public Use of Archives and FRC Records

**AGENCY:** National Archives and Records Service, GSA.

**ACTION:** Proposed rule.

**SUMMARY:** This proposed rule revises procedures relating to public access to national security information in the legal custody of the National Archives and Records Service. This revision is required by the signing of Executive Order 12356, National Security Information, on April 2, 1982, and the issuance of the Information Security Oversight Office Directive Number 1 of June 22, 1982. This proposed rule affects the process of systematic and mandatory review for the declassification of classified records in the custody of the National Archives and Records Service.

**DATE:** Comments must be received on or before March 14, 1983.

**ADDRESS:** Comments should be addressed to National Archives and Records Service (NNA), Attn: Adrienne C. Thomas, Washington, DC 20408.

**FOR FURTHER INFORMATION CONTACT:** Mr. Edwin A. Thompson (202-523-3165).

**SUPPLEMENTARY INFORMATION:** The General Services Administration has determined that this rule is not a major rule for the purpose of Executive Order 12291 of February 17, 1981, because it is not likely to result in an annual effect on the economy of $100 million or more; a major increase in costs to consumers or others; or significant adverse effects. The General Services Administration has based all administrative decisions underlying this rule on adequate information concerning the need for, and consequences of, this rule; has determined that the potential benefits to society from this rule outweigh the potential costs and has maximized the net benefits; and has chosen the alternative approach involving the lease net cost to society.

**List of Subjects in 41 CFR Part 105-61**

Archives and records, Classified information, Freedom of Information.

GSA proposes to amend 41 CFR Part 105-61 as follows:

## PART 105-61—PUBLIC USE OF RECORDS, DONATED HISTORICAL MATERIALS, AND FACILITIES IN THE NATIONAL ARCHIVES AND RECORDS SERVICE

1. The table of contents for Part 105-61 is amended by revising entries for Subpart 105-61.1 as follows:

**Subpart 105-61.1 Public Use of Archives and FRC Records**

105-61.104 Acess to national security information.
105-61.104-1 Freedom of Information Act requests.
105-61.104-2 Declassification responsibility.
105-61.104-3 Public requests for mandatory review of classified information under Executive Order 12356.
105-61.104-4 Mandatory review of classified U.S. Government originated information or foreign government information provided to the United States in confidence.
105-61.104-5 Mandatory review of information originated by a defunct agency or received by a defunct agency from a foreign government.
105-61.104-6 Mandatory review of classified White House originated information and foreign government information received or classified by the White House less than 30 years old.
105-61.104-7 Mandatory review of classified White House originated information and foreign government information received or classified by the White House more than 30 years old.
105-61.104-8 Access by historical researchers and former Presidential appointees.
105-61.104-9 Fees.

2. Sections 105-61.104, 105-61.104-1, 105-61.104-2, 105-61.104-3, and 105-61.104-4 are revised to read as follows:

**§ 105-61.104 Access to national security information.**

Declassification of and public access to national security information and material, hereinafter referred to as "classified information" or collectively termed "information," is governed by Executive Order 12356 of April 2, 1982 (47 FR 14874, April 6, 1982), the implementing Information Security Oversight Office Directive Number 1 of June 22, 1982 (47 FR 27836, June 25, 1982), and the Freedom of Information Act (5 U.S.C. 552).

**§ 105-61.104-1 Freedom of Information Act requests.**

(a) *Requests for access to national security information under the Freedom of Information Act.* Requests for access to national security information under the Freedom of Information Act are processed in accordance with the provisions of § 105-61.103-1(b). Time limits for responses to Freedom of Information Act requests for national security information are those provided in the act rather than the longer time limits provided for responses to mandatory review requests specified by Executive Order 12356.

(b) *Agency action.* Upon receipt of a request forwarded by NARS for a determination regarding declassification, the agency with declassification responsibility shall:

(1) Advise whether the information should be declassified in whole or in part or should continue to be exempt from declassification;

(2) Provide a brief statement of the reason any requested information should not be declassified; and

(3) Return all reproductions referred for determination, including a copy of each document which should be released only in part, marked to indicate the portions which remain classified.

(c) *Denials and Appeals.* Denials under the Freedom of Information Act of access to national security information accessioned into the National Archives are made by designated officials of the originating or responsible agency. NARS notifies the requestor of the agency's determination. Appeals of denials of access to national security information must be made in writing to the appropriate authority in the agency having declassification responsibility for the denied information as indicated in § 105-61.104-2.

**§ 105-61.104-2 Declassification responsibility.**

(a) *Classified U.S. Government originated information less than 30 years old.* Declassification of U.S. Government originated information less than 30 years old is the responsibility of the agency that originated the information.

(b) *Foreign government information provided to the United States in confidence and less than 30 years old.* Declassification of foreign government information (provided to the U.S. in confidence) less than 30 years old, is the responsibility of the agency that initially received or classified the foreign government information in consultation with concerned agencies. NARS may make a declassification determination on foreign government information less than 30 years old only when the responsible agency has specifically authorized this action.

(c) *Classified U.S. Government originated information and foreign government information provided in confidence more than 30 years old.* Systematic reviews of U.S. Government originated information and foreign government information (provided to the U.S. in confidence) more than 30 years old (except for intelligence file series described in paragraph (d) of this section accessioned into the National Archives or donated to the Government are the responsibility of NARS. NARS shall conduct systematic declassification reviews in accordance with guidelines provided by the head of the originating agency or, with respect to foreign government information, in accordance with guidelines provided by the head of the agency having declassification jurisdiction over the information. If no guidelines for review of foreign government information have been provided by the agency heads, the Director of the Information Security Oversight Office, after coordinating with the agencies having declassification authority over the information, shall issue general guidelines for systematic declassification reviews. With respect to the systematic reviews of Presidential papers or records, guidelines shall be developed by the Archivist of the United States and approved by the National Security Council.

(d) *Classified U.S. Government originated information concerning intelligence and cryptology.* Systematic reviews of accessioned records and presidential papers or records concerning intelligence activities

(including special activities), or intelligence sources or methods, and cryptology created after 1945, shall be conduced as the records become 50 years old. NARS shall conduct systematic declassification reviews in accordance with guidelines provided by the Director of the Central Intelligence Agency concerning information on intelligence activities and intelligence sources and methods, and by the Secretary of Defense concerning cryptologic information.

(e) *White House information.* Declassification of information from a previous administration which was originated by the President; by the White House staff; by committees, commissions, or boards appointed by the President; or by others specifically providing advice and counsel to a President or acting on behalf of the President (hereinafter referred to as "White House information") is the responsibility of the Archivist of the United States. Declassification determinations will be made after consultation with agencies having primary subject matter interest and will be consistent with the provisions of applicable laws or lawful agreements.

(f) *Information originated by a defunct agency.* NARS is responsible for declassification of all information in the custody of NARS originated by an agency that has ceased to exist and whose functions have not been transferred to another agency and of all foreign government information originally received or classified by such an agency. NARS shall make declassification determinations after consultation with all agencies having primary subject matter interest.

**§ 105-61.104-3 Public requests for mandatory review of classified information under Executive Order 12356.**

United States citizens or permanent resident aliens, Federal agencies, or State or local governments wishing to request mandatory review of classified information that has been accessioned into the National Archives or donated to the Government may do so by describing the document or material containing the information with sufficient specificity to enable NARS to locate it with a reasonable amount of effort. When practicable, a request shall include the name of the originator and recipient of the information, as well as its date, subject, and file designation. If the information sought cannot be identified from the description provided or if the information sought is so voluminous that processing it would interfere with NARS' capacity to serve all requesters on an equitable basis, NARS shall notify the requester that, unless additional information is provided or the scope of the request is narrowed, no further action will be taken. NARS shall review for declassification and release the requested information or those declassified portions of the request that constitute a coherent segment unless withholding is otherwise warranted under applicable law. Requests for mandatory review should be addressed to the appropriate NARS depository listed in § 105-61.5101.

**§ 105-61.104-4 Mandatory review of classified U.S. Government originated information and foreign government information provided to the United States in confidence.**

(a) *NARS action.*—(1) *Information less than 30 years old.* NARS shall promptly acknowledge receipt of a request for mandatory review of classified U.S. Government originated information, and within 20 calendar days of receipt of the request, shall forward the request, with copies of the documents containing the requested information to the agency that originated the information or to the agency that the Archivist determines has primary subject matter interest. With respect to foreign government information, the request and copies of the documents shall be forwarded to the agency which initially received or classified the information. If unable to identify that agency, NARS shall forward the request to the agency which has primary subject matter interest. NARS shall inform the requester that referrals have been made.

(2) *Information more than 30 years old.* NARS shall acknowledge receipt of a request for mandatory review of classified U.S. Government originated information or foreign government information which NARS may review for declassification using systematic review guidelines, and within 60 days of receipt of the request shall act upon it and notify the requester of the action taken. If additional time is necessary to make a declassification determination, NARS shall notify the requester of the time needed to process the request. NARS will make a final determination within 1 year of the receipt of the request. Information that NARS may not declassify using the systematic review guidelines shall be promptly forwarded, with copies of the documents containing the requested information, to the responsible agency. NARS shall notify the requester that referrals have been made.

(b) *Agency action.* Upon receipt of a request for mandatory review of classified U.S. Government originated information or foreign government information forwarded by NARS, the originating or responsible agency shall:

(1) Either make a prompt declassification determination and notify the requester accordingly, or inform the requester and NARS of the additional time needed to process the request. Except in unusual circumstances, agencies shall make a final determination within 1 year.

(2) Notify NARS of any other agency to which it forwards the request in those cases requiring the declassification determination of another agency.

(3) Forward the declassified reproductions to the requester with their determination and also notify NARS of that determination. When the request cannot be declassified in its entirety the agency must also furnish the requester (with a copy to NARS):

(i) A brief statement of the reasons the requested information cannot be declassified;

(ii) A statement of the right to appeal within 60 calendar days of receipt of the denial; procedures for taking such action, and the name, title, and address of the appeal authority. The agency appellate authority shall make a determination within 30 working days following the receipt of the appeal. If additional time is required to make a determination, the agency appellate authority shall notify the requester and NARS of the additional time needed and provide the requester with the reason for the extension. The agency appellate authority shall notify NARS and the requester in writing of the final denials.

(iii) The agency will also furnish to NARS a copy of each document released only in part, marked to indicate the portions which remain classified.

**§§ 105-61.104-6 through 105-61.104-10 [Redesignated as §§ 105-61.104-5 through 105-61.104.9 and revised]**

3. Sections 105-61.104-6 through 105-61.104-10 are renumbered § 105-61.104-5 through § 105.61.104-9 and revised as follows:

**§ 105-61.104-5 Mandatory review of information originated by a defunct agency or received by a defunct agency from a foreign government.**

(a) *NARS action.* NARS is responsible for declassification of all information in the custody of NARS originated by an agency which has ceased to exist and whose functions have not been transferred to another agency and of all foreign government information originally received or classified by such an agency. NARS shall promptly acknowledge receipt of requests for such

information, review the information using systematic review guidelines, and, when necessary, consult with any agency having primary subject matter interest. NARS shall either make a prompt declassification determination and notify the requester accordingly, or inform the requester of the additional time needed to process the request. Except in unusual circumstances NARS shall make a final determination within 1 year. If the request is denied in whole or in part, the Assistant Archivist for the National Archives or the Assistant Archivist for Presidential Libraries shall furnish the requester a brief statement of the reasons for denial and a notice of the right to appeal the determination within 60 calendar days to the Deputy Archivist of the United States (mailing address: General Services Administration (ND), Washington, DC 20408). Upon receipt of an appeal, the Deputy Archivist shall, within 30 calendar days:

(1) Review the previous decision made to deny the information and, as necessary,

(2) Consult with the appellate authorities in any agency having primary subject matter interest in the information previously denied; and

(3) Notify the requester of the determination and make available to the requester any additional information that has been declassified as result of the appeal.

(b) *Agency action.* Upon receipt of a request forwarded by NARS for consultation regarding the declassification of information originated by a defunct agency or of foreign government information originally received or classified by a defunct agency, the agency with primary subject matter interest shall:

(1) Advise the Archivist whether the information should be declassified in whole or in part or should continue to be exempt from declassification; and

(2) Return the request to NARS along with a brief statement of the reasons why any requested information should not be declassified.

**§ 105-61.104-6 Mandatory review of classified White House originated information and foreign government information received or classified in the White House less than 30 years old.**

(a) *NARS action.* (1) White House information is subject to mandatory review consistent with the provisions of applicable laws or lawful agreements that pertain to the respective Presidential papers or records. Unless precluded by such laws or agreements, White House originated information is subject to mandatory review 10 years after the close of the administration which created the materials or when the materials have been archivally processed, whichever occurs first.

(2) NARS shall promptly acknowledge receipt of a request for mandatory review of White House originated information and foreign government information received or classified by the White House which is requested more than 10 years after the close of the administration or after it has been archivally processed, whichever occurs first.

(2) NARS shall review the requested information, determine which agencies have primary subject matter interest, forward to those agencies copies of material containing the requested information, and request their recommendation regarding declassification.

(3) NARS shall review the recommendations returned by the agencies and make its declassification determination within one year of receipt of the request.

(4) When the request cannot be declassified in its entirety, NARS shall furnish the requester:

(i) A brief statement of the reasons the requested information cannot be declassified;

(ii) Access to the portions of documents releasable in part that constitute a coherent segment; and

(iii) A notice of the right to appeal the determination within 60 days to the Deputy Archivist of the United States (mailing address: General Services Administration (ND), Washington, DC 20408).

(5) Upon receipt of an appeal, the Deputy Archivist shall within 30 calendar days:

(i) Review the decision to deny the information;

(ii) Consult with the appellate authorities in agencies having primary subject matter interest in the information previously denied;

(iii) Notify the requester of the determination and make available to the requester any additional information which has been declassified as a result of the appeal; and

(iv) Notify the requester of the right to appeal denials of access to the Director, Information Security Oversight Office (mailing address: General Services Administration (Z), Washington, DC 20405).

(b) *Agency Action.* Upon receipt for a request forwarded to NARS for consultation regarding declassification of White House originated information and foreign government information received or classified by the White House, the agency with primary subject matter interest shall:

(1) Advise the Archivist of the United States whether the information should be declassified in whole or in part or should continue to be exempt from declassification;

(2) Provide a brief statement of the reasons any requested information should not be declassified; and

(3) Return all reproductions referred for consultation including a copy of each document that should be released only in part, marked to indicate the portions which remain classified.

**§ 105-61.104-7 Mandatory review of classified White House originated information and foreign government information received or classified by the White House more than 30 years old.**

(a) NARS shall promptly acknowledge the receipt of a request for mandatory review of classified White House originated information and foreign government information received by or classified in the White House that is more than 30 years old, and shall act upon the request within 60 days. If additional time is necessary to make a declassification determination, NARS shall notify the requester of the time needed to process the request. NARS shall make a final determination within 1 year of the receipt of the request.

(b) NARS shall review the information using applicable systematic review guidelines and shall make available to the requester information declassified using those guidelines.

(c) Information which cannot be declassified by NARS using systematic review guidelines shall be forwarded to the agencies with primary subject matter interest and further processed in accordance with § 105-61.104-6(a) (2) through (5) and (b).

**§ 105-61.104-8 Access by historical researchers and former presidential appointees.**

(a) Access to classified information may be granted to U.S. citizens who are engaged in historical research projects or who previously occupied policy making positions to which they were appointed by the President. Persons desiring permission to examine material under this special historical researcher/presidential appointees access program should contact NARS at least 4 months before they desire access to the materials to permit time for the responsible agencies to process the requests for access. NARS shall inform requesters of the agencies to which they will have to apply for permission to examine classified information and shall provide requesters with the information

and forms to apply for permission from the Archivist of the United States to examine classified information originated by the White House or classified information in the custody of the National Archives which was originated by a defunct agency.

(b) Requesters may examine records under this program only after the originating or responsible agency:

(1) Determines in writing that access is consistent with the interest of national security;

(2) Takes appropriate steps to protect classified information from unauthorized disclosure or compromise, and ensures that the information is safeguarded in a manner consistent with Executive Order 12356; and

(3) Limits the access granted to former presidential appointees to item that the person originated, reviewed, signed, or received while serving as a presidential appointee.

(c) To guard against the possibility of unauthorized access to restricted records, a director may issue instructions supplementing the research room rules provided in § 105-61.102.

**§ 105-61.104-9 Fees.**

NARS will charge requesters for copies of declassified documents according to the fees listed in 41 CFR 105-61.5206.

(Sec. 205(c), 63 Stat. 390; 40 U.S.C. 486(c))

Dated: January 13, 1983.

**Robert M. Warner,**

*Archivist of the United States.*

[FR Doc. 83-3631 Filed 2-9-83; 8:45 am]

BILLING CODE 6820-26-M

---

## DEPARTMENT OF TRANSPORTATION

### Urban Mass Transportation Administration

### 49 CFR Part 630

**[Docket No. 83-A]**

### Uniform System of Accounts and Records and Reporting System

**AGENCY:** Urban Mass Transportation Administration, DOT.

**ACTION:** Notice of proposal to waive a requirement and request for comment.

**SUMMARY:** In this Notice, the Urban Mass Transportation Administration (UMTA) is proposing to waive a reporting requirement, generally fulfilled by passenger surveys. This requirement is imposed by UMTA's regulation on a Uniform System of Accounts and Records and Reporting System. Under this regulation, certain UMTA grant recipients must report data pertaining to the average time per unlinked trip. The Administrator of UMTA has the authority to waive this requirement under the regulation and is proposing to do so to ease the paperwork burden on recipients.

**DATE:** Comments are due on or before March 14, 1983.

**ADDRESS:** Comments on the waiver should be submitted to UMTA Docket No. 83-A, Urban Mass Transportation Administration, Room 9228, 400 Seventh Street, SW., Washington, D.C. 20590. All comments and suggestions received will be available for examination at the above address between 8:30 a.m. and 5:00 p.m., Monday through Friday. Receipt of comments will be acknowledged by UMTA if a self-addressed, stamped postcard is included with each comment.

**FOR FURTHER INFORMATION CONTACT:** Philip G. Hughes, Office of Information Services, Room 6419, 400 Seventh Street, SW., Washington, D.C. 20590, (202) 426-1957.

**SUPPLEMENTARY INFORMATION:**

#### Background

Section 15 of the Urban Mass Transportation Act of 1964, as amended, (49 U.S.C. 1611) (UMT Act) requires the Secretary of Transportation to, "* * * develop, test, and prescribe a reporting system to accumulate public mass transportation financial and operating information by uniform categories and a uniform system of accounts and records." The purpose of accumulating this data is to assist Federal, State, and local governments, and individual public mass transportation systems in planning public transportation services, in making investment decisions, and in allocating Federal assistance under the Urban Mass Transportation Act of 1964, as amended by the Surface Transportation Assistance Act of 1982. The Secretary has delegated this responsibility to the Urban Mass Transportation Administrator. (49 CFR 1.51).

UMTA published regulations to implement Section 15 on January 19, 1977, (42 FR 3772). These regulations are codified at 49 CFR Part 630 and have been amended several times (43 FR 58928, December 18, 1978; 44 FR 4493, January 22, 1979; and 44 FR 26052, May 3, 1979).

Section 630.12(a)(7) of this regulation requires recipients to provide specific operating data elements as set forth in Table B-8 therein. This Table B-8 includes a data element for average time per unlinked trip. Average time per unlinked trip, as used in this context, means the average (i.e., arithmetic mean) number of minutes that the passenger spends aboard the revenue vehicle for an unlinked passenger trip.

After examining the particular requirements for data relating to average time per unlinked trip, UMTA has concluded that this data might be less useful than originally envisioned, both to UMTA in administering its program and to State and local governments in planning their transportation programs. In addition, recipients have indicated that collection of this data can be unnecessary, costly and burdensome.

Section 630.7 authorizes the UMTA Administrator to waive any of the reporting requirements contained in the regulation, if the Administrator determines that the waiver is clearly necessary and is consistent with the intent of the law. It is UMTA's opinion that waiving the requirement concerning average time per unlinked trip might save recipients administrative expense and ease the paperwork burden placed on them. In addition, waiving this requirement is consistent with the intent of Section 15, since it appears to concern data that is not necessary to plan mass transportation programs or to distribute funds authorized under the UMT Act. Therefore, unless significant comments to the contrary are received, pursuant to § 630.7, UMTA proposes to waive the requirement in § 630.12(a)(7)(i), Table B-8, that requires the reporting of data concerning average time per unlinked passenger trip.

#### Request for Comments

When UMTA drafted the Section 15 regulation, UMTA sought and utilized the experience and expertise of a representative cross section of individuals active in the urban public transportation field to review, comment on, and make recommendations about the content of that regulation. This was done in order to design a system that would meet the needs of all potential users of the transit data that would be obtained. In view of this commitment to the public at large, UMTA is concerned about the effect of issuing waivers that make reductions in reporting

requirements without obtaining the balanced advice of all data users. For this reason, UMTA is providing all interested parties an opportunity to submit comments about the waiver of the reporting of average time per unlinked trip.

After the comment period closes, UMTA will review and evaluate all comments and suggestions received. UMTA will then determine whether to waive this reporting requirement. A Notice announcing UMTA's decision will be published in the **Federal Register**

Issued on: February 3, 1983.

**Arthur E. Teele, Jr.,**

*Administrator.*

[FR Doc. 83-2843 Filed 2-9-83; 8:45 am]

BILLING CODE 4910-57-M

# Notices

Federal Register
Vol. 48, No. 29
Thursday, February 10, 1983

This section of the FEDERAL REGISTER contains documents other than rules or proposed rules that are applicable to the public. Notices of hearings and investigations, committee meetings, agency decisions and rulings, delegations of authority, filing of petitions and applications and agency statements of organization and functions are examples of documents appearing in this section.

## DEPARTMENT OF AGRICULTURE

### Forest Service

### Western Spruce Budworm Management Program; Santa Fe National Forest; Revised Notice of Intent To Prepare an Environmental Statement

A Notice of Intent To Prepare an Environmental Statement was previously prepared in September, 1981 for this program. That notice is amended as follows:

The responsible official is Mr. James L. Perry, Forest Supervisor of the Santa Fe National Forest, Southwestern Region, U.S. Forest Service.

The Draft Environmental Impact Statement should be available for public review by March, 1983 and the Final Environmental Impact Statement is scheduled for completion in May 1983.

Comments, concerns, and information pertaining to the Western Spruce Budworm Program should be submitted in writing to: James L. Perry, Forest Supervisor, Santa Fe National Forest, P.O. Box 1689, Santa Fe, New Mexico 87501. Phone: 988-6940.

Dated: January 28, 1983.

**James L. Perry,**

*Forest Supervisor.*

[FR Doc. 83-3579 Filed 2-9-83; 8:45 am]

BILLING CODE 3410-11-M

## DEPARTMENT OF COMMERCE

### Foreign-Trade Zones Board

[Docket No. 1-83]

### Foreign Trade Zone 27, Boston; Application for Subzone at Lawrence Textile Shrinking Company, Lawrence, Massachusetts

Notice is hereby given that an application has been submitted to the Foreign-Trade Zones Board (the Board) by the Massachusetts Port Authority, grantee of Foreign-Trade Zone 27 in Boston, for a special-purpose subzone at the textile processing plant of the Lawrence Textile Shrinking Company (Lawrence Textile), Lawrence, Massachusetts, within the Lawrence Customs port of entry. The application was submitted pursuant to the provisions of the Foreign-Trade Zones Act, as amended (19 U.S.C. 81a-81u), and the regulations of the Board (15 CFR Part 400). It was formally filed on February 3, 1983. The applicant is authorized to make this proposal under chapter 771 of the Acts of the Commonwealth of Massachusetts, 1971. There have been preliminary discussions of the proposal with Customs officials and the Commerce Office of Textiles and Apparel.

The subzone would involve Lawrence Textile's 2½-acre plant located at 516 Broadway, Lawrence, Massachusetts. The company performs a variety of services for foreign and domestic textile mills and textile product users, primarily for wool and wool blend materials. Its activities under zone procedures would be limited to the following inspection and processing operations: examination, repair, sponging, "London" shrinking, folding, measuring, tentering, drying, back coating, color evaluation, packaging and labeling. The processes would involve no changes in Customs classification.

Zone procedures would allow the company's customers to avoid duty payment on material that is either reexported or rejected. On their domestic sales, the firms would be able to defer duty payment until after inspection and processing. Because duty rates range from 5 to 38 percent with most of the material subject to a 38 percent duty, savings from zone procedures could be substantial. These procedures could not be fully utilized at the zone in Boston. Their availability at the Lawrence plant would help Lawrence Textile compete with offshore operations.

In accordance with the Board's regulations, an Examiners Committee has been appointed to investigate the application and report thereon to the Board. The committee consists of Dennis Puccinelli (Chairman), Foreign-Trade Zones Staff, U.S. Department of Commerce, Washington, D.C. 20230; Edward A. Goggin, Assistant Regional Commissioner (Operations), U.S. Customs Service, Northeast Region, 100 Summer Street, Boston, Massachusetts 02110; and Colonel Carl B. Sciple, Division Engineer, U.S. Army Engineer Division New England, 424 Trapelo Road, Waltham, Massachusetts 02154.

Comments concerning the proposed zone expansion are invited in writing from interested persons and organizations. They should be addressed to the Board's Executive Secretary at the address below and postmarked on or before March 11, 1983.

A copy of the application is available for public inspection at each of the following locations:

Office of the Director, U.S. Dept. of Commerce District Office, 441 Stuart Street, 10th Floor, Boston, Massachusetts 02116

Office of the Executive Secretary, Foreign-Trade Zones Board, U.S. Department of Commerce, 14th and Constitution, NW., Room 1872, Washington, D.C. 20230

Dated: February 7, 1983.

**John J. Da Ponte, Jr.,**

*Executive Secretary, Foreign-Trade Zones Board.*

[FR Doc. 83-3690 Filed 2-9-83; 8:45 am]

BILLING CODE 3510-25-M

### International Trade Administration

### Announcing Intent To Prepare an Environmental Impact Statement/ Announcement of Scoping Meeting; 1992 Chicago World's Fair

**AGENCY:** International Expositions Staff.

**ACTION:** Department of Commerce, International Trade Administration, International Expositions Staff intent to prepare an Environmental Impact Statement (EIS) for use in decisionmaking regarding the proposed 1992 Chicago World's Fair. A scoping meeting will be held on February 28, 1983.

**SUMMARY:** The International Trade Administration, U.S. Department of Commerce, will prepare an EIS for use in decisionmaking regarding the proposed 1992 Chicago World's Fair. A scoping meeting will be held on February 28, 1983.

This notice of intent is published pursuant to the regulations of the Council on Environmental Quality in

Title 40, Code of Federal Regulations § 1501.7 on implementation of the National Environmental Policy Act (NEPA).

The Department of Commerce will serve as the lead agency in the supervision and preparation of the EIS. The U.S. Army Corps of Engineers, Department of Defense, will serve as the cooperating agency.

The EIS covered by this notice will describe the proposed project and the nature, range, degree, and extent of impacts which may be associated with it. The draft EIS is scheduled to be completed by November 30, 1983. Upon issuance of the draft statement, a public comment period and a public hearing (scheduled for January 2, 1984) are planned to obtain comments on the draft statement. The final environmental statement is scheduled to be published on or about May 9, 1984.

In connection with the development of this EIS, the Commerce Department will hold a scoping meeting to determine the nature, extent, and scope of the issues and concerns that should be addressed in the EIS related to the proposed action. The purpose of the scoping process, among other things, is to reduce paperwork in the EIS process and focus impact statements on significant environmental issues, while limiting or eliminating the consideration of those that are not significant or beneficial in decisionmaking. This scoping process is planned to include affected Federal, regional, State and local agencies, organizations, interest groups, and the general public in the geographic areas potentially affected by the proposed project. After a brief description of the nature and extent of the proposed action and a presentation of the findings of an environmental assessment prepared for the proposed action, individuals, organizations and governmental agencies will be invited to submit views on issues to be included in the EIS and on the approach for analyzing and evaluating the identified issues.

Oral statements will be received. However, in order that all persons desiring to present statements have an equal opportunity to express their views, it is requested that all persons limit their oral comments to approximately ten (10) minutes. The cooperation and assistance of persons in conforming to this request will be appreciated.

**FOR FURTHER INFORMATION CONTACT:** Written statements and exhibits will be accepted by the Department of Commerce official conducting the hearing, or they may be mailed to Mr. Ed Wilczynski at the following address by March 28, 1983. Ed Wilczynski, National Oceanic and Atmospheric Administration, Room 6800, U.S. Department of Commerce, Washington, D.C. 20230 (202/377-5181).

**SUPPLEMENTARY INFORMATION:** To assist interested parties in familiarizing themselves with the proposal and its preliminary environmental assessment prior to the scoping meeting, copies of the Environmental Assessment (EA) will be made available for review at the following locations:

1. Chicago Municipal Reference Library, 121 North LaSalle Street, Room 1004, Chicago, Illinois. (312/744-4992)

2. Chicago Public Library, Government Publications Department, 425 North Michigan Avenue, 12th Floor, Chicago, Illinois. (312/269-3002).

3. Branches of the Chicago Public Library:

—Hild Regional Library, 4544 North Lincoln Avenue. (312/728-8652)
—East Side Library, 10542 South Ewing Avenue. (312/721-5500)
—Jefferson Park Library, 5363 West Lawrence Avenue. (312/736-9075)
—Beverly Library, 2121 West 95th Street. (312/445-7715)
—Rogers Park Library, 9525 South Halsted Street. (312/881-6900)
—South Shore Library, 2505 East 73rd Street. (312/734-4780)
—Austin Library, 5615 West Race Avenue. (312/287-0667)
—Garfield Ridge Library, 6322 Archer Avenue. (312/582-6094)
—Eckhart Park Library, 1371 West Chicago Avenue. (312/226-6069)

Individuals interested in obtaining a copy of the assessment for the cost of reproduction may do so by contacting; Bernadette S. Tramm, Executive Assistant, Chicago World's Fair—1992 Corporation, Suite 2590, One First National Plaza, Chicago, Illinios 60603. (312/444-1992)

**MEETING DATE:** The scoping meeting will be held on February 28, 1983, beginning at 2 p.m. in Simpson Hall, Field Museum of Natural History (West Entrance), Chicago, Illinois. For further information regarding the scoping meeting, the EIS, and associated NEPA activities pertaining to the proposed Fair, please contact Mr. Wilczynski at the above noted location.

Dated: February 3, 1983.

**George L. B. Pratt,**

*Director, International Expositions Staff.*

[FR Doc. 83-3860 Filed 2-9-83; 8:45 am]

BILLING CODE 3510-25-M

## Preliminary Affirmative Countervailing Duty Determinations; Stainless Steel Sheet, Strip, and Plate From the United Kingdom

**AGENCY:** International Trade Administration, Commerce.

**ACTION:** Preliminary affirmative countervailing duty determinations.

**SUMMARY:** We preliminarily determine that certain benefits which constitute subsidies within the meaning of the countervailing duty law are being provided to manufacturers, producers, or exporters in the United Kingdom of stainless steel sheet, strip, and plate as described in the "Scope of Investigations" section of this notice. The estimated net subsidy for each firm is indicated in the "Suspension of Liquidation" section of this notice. Therefore, we are directing the U.S. Customs Service to suspend liquidation of all entries of the products subject to these determinations which are entered, or withdrawn from warehouse, for consumption, and to require a cash deposit or bond on these products in an amount equal to the estimated net subsidy. If these investigations proceed normally, we will make our final determination by April 20, 1983.

**EFFECTIVE DATE:** February 10, 1983.

**FOR FURTHER INFORMATION CONTACT:** Vincent P. Kane, Office of Investigations, Import Administration, International Trade Administration, U.S. Department of Commerce, 14th Street and Constitution Avenue, NW., Washington, D.C. 20230, telephone: (202) 377-5414.

**SUPPLEMENTARY INFORMATION:**

### Preliminary Determinations

Based upon our investigations, we preliminarily determine that there is reason to believe or suspect that certain benefits which constitute subsidies within the meaning of section 701 of the Tariff Act of 1930, as amended (the Act), are being provided to manufacturers, producers, or exporters in the United Kingdom of stainless steel sheet, strip, and plate as described in the "Scope of Investigations" section of this notice. For purposes of these investigations, the following programs are preliminarily found to confer subsidies:

- Public dividend capital and new capital.
- National Loans Fund loans and loan conversions.
- Regional development grants.
- Iron and Steel Industry Training Board grants.

We estimate the net subsidy to be the amount indicated for each firm in the

"Suspension of Liquidation" section of this notice.

*Case History*

On October 7, 1982, we received a petition from Allegheny Ludlum Steel Corporation; Armco, Inc.; Carpenter Technology Corporation; Colt Industries, Inc., of the Crucible Materials Group; Eastern Stainless Steel Company; Electralloy Corporation; Guterl Special Steel Corporation; Jessop Steel Company; Jones and Laughlin Steel Incorporated; Republic Steel Corporation; Universal Cyclops Specialty Steel Division of the Cyclops Corporation; Washington Steel Corporation; and the United Steelworkers of America, filed on behalf of the U.S. industry of manufacturers of stainless steel sheet, strip, and plate. The petition alleged that certain benefits which constitute subsidies within the meaning of section 701 of the Act are being provided, directly or indirectly, to the manufacturers, producers, or exporters in the United Kingdom of the stainless steel products listed above.

We found the petition to contain sufficient grounds upon which to initiate countervailing duty investigations, and on November 2, 1982, we initiated countervailing duty investigations (47 FR 49692). We stated that we expected to issue preliminary determinations by December 31, 1982. We subsequently determined that the investigations are "extraordinarily complicated," as defined in section 703(c) of the Act, and postponed our preliminary determinations for 35 days until February 4, 1983 (47 FR 56527). Since the United Kingdom is a "country under the Agreement" within the meaning of section 701(b) of the Act, injury determinations are required for these investigations. Therefore, we notified the U.S. International Trade Commission (ITC) of our initiations. On November 22, 1982, the ITC determined that there is a reasonable indication that these imports are materially injuring a U.S. industry.

We presented questionnaires concerning the allegations to the Delegation of the Commission of the European Communities and the government of the United Kingdom on November 9, 1982. Questionnaires were also presented to British Steel Corporation and Arthur Lee and Sons, Ltd. On December 30, 1982, we received the responses to the questionnaires. Supplemental responses were received on January 10, 1983.

*Scope of Investigations*

The products covered by these investigations are:

- Stainless steel sheet and stainless steel strip.
- Stainless steel plate.

The products are fully described in the appendix to this **Federal Register** notice.

British Steel Corporation (BSC) is the only known producer and/or exporter in the United Kingdom of stainless steel sheet and plate exported to the United States. Arthur Lee and Sons, Ltd., is the only known producer and/or exporter in the United Kingdom of stainless steel strip exported to the United States. The period for which we are measuring subsidization is the most recent fiscal year for which information is available.

*Analysis of Programs*

In their responses, the government of the United Kingdom and the Delegation of the Commission of the European Communities provided data for the applicable periods. Additionally, we received information from BSC and Arthur Lee and Sons, Ltd.

Throughout this notice, some of the general principles and conclusions of law applied by the Department of Commerce to the facts of these investigations concerning stainless steel sheet, strip and plate from the United Kingdom are described in detail in Appendices 2–4 of the "Final Affirmative Countervailing Duty Determinations: Certain Steel Products from Belgium," 47 FR 39304, 39316 (August 24, 1982) (Belgian Final). Unless otherwise noted, we allocated each company's countervailable benefits as follows:

- Where untied benefits were provided to a company, they were allocated over the revenue of that company; and
- Where benefits were provided directly to a specific corporate division producing products under investigation, they were allocated over the revenue of that division.

Based upon our analysis to date of the petitions and responses to our questionnaires, we have preliminarily determined the following:

**I. Programs Preliminarily Determined To Confer Subsidies**

We preliminarily determine that subsidies are being provided to manufacturers, producers, or exporters in the United Kingdom of stainless steel sheet, strip, and plate under the programs listed below.

*A. Equity Investment in BSC*

BSC was established by an Act of Parliament on March 22, 1967, under the provisions of the Iron and Steel Act of 1967. The 1967 Act combined 14 steel companies, creating the nationalized British Steel Company. The British government reimbursed stockholders of record at the time the companies were merged and absorbed the substantial debts of the individual companies. The bulk of the debt was converted to government equity under the provisions of the Iron and Steel Act of 1969, which also authorized government payments to BSC.

Authority for the government to make payments to BSC was renewed in the Iron and Steel Act of 1975. Section 18(l) of this Act provided that "the Secretary of State may, with the approval of the Treasury, pay to the British Steel Corporation such sums as he thinks fit." In nine of the fifteen years of its existence, the corporation has received such payments, known as public dividend capital (PDC) or new capital (NC), from the government. In 1972 and 1981, Parliament directed that portions of its capital investment be credited to accumulated revenue deficit. Neither of these transactions altered the potentially countervailable benefit of the original public dividend capital or new capital infusions. Two additional equity investments were made in 1972 and in 1981 when certain government loans were converted into equity.

As discussed in Appendix 2 of the Belgian Final, *supra,* the treatment of government equity investment in a company hinges essentially on the soundness of the investment. If the government investment was reasonably sound at the time it was made, we do not consider it a subsidy. If, on the contrary, the investment appears to have been unsound, a subsidy may exist.

For the purpose of determining whether BSC represented a sound investment at the time each equity investment was made by the U.K. government, we primarily considered BSC's cash flow from operations, including interest, but excluding government grants. Our analysis also included BSC's operating results and computations of BSC's current ratio (current assets divided by current liabilities). On the basis of these tests, we considered investment in BSC to be inconsistent with commercial considerations from fiscal year 1977/78 through 1981/82.

Since we have determined that BSC was not a sound investment from April 1977 through March 1982, we examined the government's equity infusions during this period to determine whether they bestowed a subsidy. As described in greater detail in Appendix 2 of the Belgian Final, *supra,* we compared the

rate of return the government received on its equity or investment in BSC in a given year with the average rate of return on equity investment in the United Kingdom for that year, as estimated by the average earnings yield on U.K. industrial shares. BSC's return was measured by its net earnings (or losses) divided by owner's equity. During this period, BSC's losses were large, resulting in substantial negative returns on owner's equity.

Comparing the average return with BSC's large negative return yielded an amount exceeding he amount we would have calculated had we treated the public dividend capital or new capital payments as outright grants rather than as equity. Consequently, we have limited the subsidy to the 1981/82 amount that would result if the equity investments were treated as grants.

For reasons described in Appendix 2 of the Belgian Final, *supra*, we allocated that part of the equity infusion used for loss coverage in a given year exclusively to that year rather than over a longer period of time. The remainder of the subsidy was allocated using the grant methodology. (See grants and equity methodologies described in Appendix 2 of the Belgian Final, *supra*.)

For 1981/82, we calculated a subsidy of 6.13 percent *ad valorem* for PDC and NC payments for loss coverage in that year. For PDC and NC payments in excess of loss in each of the fiscal years 1977/78 through 1981/82, we found, using the equity methodology, a subsidy of 9.75 percent *ad valorem* for fiscal year 1981/82. Thus, the total subsidy in fiscal year 1981/82 resulting from PDC and NC payments was 15.88 percent *ad valorem*.

*B. The National Loans Fund*

The National Loans Fund (NLF) is a depository of money raised through government borrowings. Lending from the NLF is not generally available, but is limited to nationalized British companies. Therefore, British Independent Steel Producer Association members (BISPA producers), including Arthur Lee and Sons, Ltd., do not qualify for NLF loans. BSC was expressly authorized to borrow from NLF's predecessor fund (the Consolidated Fund) by the Iron and Steel Act of 1967, and from the NLF by the Iron and Steel Act of 1975.

BSC received substantial loans from the NLF. If these loans had remained outstanding in fiscal year 1981/82, then we would have applied the methodology for loans described in Appendix 2. However, all outstanding loans from the NLF were converted into equity: L 150 million in 1971/72, and L 509 million in 1981/82. We treated each conversion as an additional equity investment.

Since the first conversion occurred during the period in which we consider equity infusions to be consistent with commercial considerations, it does not confer a subsidy. The second conversion, however, was made during the period in which we consider equity infusions to be inconsistent with commercial considerations, and potentially confers a subsidy. Using the equity methodology described in Appendix 2 of the Belgian Final, *supra*, we determined that a subsidy was in fact conferred.

However, comparing the average return on equity with BSC's large negative return yielded an amount exceeding the amount we would have calculated had we treated the equity infusion as an outright grant.

Consequently, we have limited the subsidy to the 1981/82 amount that would result if the equity investment were treated as a grant. Upon this basis, we calculated a subsidy for BSC of 2.21 percent *ad valorem*.

We note that our loss coverage allocation methodology does not apply to the 1981/82 conversion since there was no infusion of cash at that time.

*C. Regional Development Grants*

The Industry Act of 1972 established a regional development grant (RDG) incentive program with the goal of eliminating certain social problems in specified regions of the United Kingdom. RDG's are not made generally available in the United Kingdom, but rather are available only to designated manufacturing sectors (e.g., metals manufacture) and to "special development" and "development" regions. Therefore, we preliminarily find the RDG program to be preferential in nature and to confer subsidies within the meaning of section 771(5) of the Act.

The Secretary of State for Industry, with the approval of the Treasury, is authorized to determine the activities that qualify for grants and the conditions of each grant. The grants are made toward the cost of capital expenditures on new buildings or works in development areas, the adaptation of existing buildings on qualifying premises in development areas, and new machinery and plants for use in qualifying premises in development areas. The grants pay for a fixed percentage of the cost for specific capital assets, depending on the type of region for which they are designated. The amount of a grant in a "development" area is 15 percent, and in a "special development" area 22 percent, of the capital asset cost. Grants are provided only after the asset has been purchased or the expenditure on it is incurred. We find these grants to be "tied" to (*i.e.*, bestowed expressly to purchase) specific capital assets.

In each case, the individual grants were for less than $50 million. In accordance with the methodology described in Appendix 2 of the Belgian Final, *supra*, we are therefore allocating them over 15 years, a period of time reflecting the average life of capital assets in integrated steel mills. On this basis we calculated a subsidy of 1.21 percent *ad valorem* for BSC.

Arthur Lee and Sons, Ltd. received regional development grants over the last five years, generally for building in development areas. Because of incomplete information supplied by respondent prior to this preliminary determination, the Department is unable to determine the amount of RDG's received by Arthur Lee over each of the last five corporate fiscal years. Additionally, we are unable to determine which portions of the total grant amount shown in their 1981 annual report are tied specifically to investment in Arthur Lee's stainless steelmaking subsidiary, Lee Steel Strip, Ltd. The only information received on RDG's was the total amount of RDG's given to Arthur Lee from the inception of the program to the end of the 1980/1981 fiscal year, less amounts released to the profit and loss account. RDG's are placed in a separate account and released to the profit and loss account over the estimated life of the relevant fixed assets.

Based on the best information available at the time of these preliminary determinations, we preliminarily determine that the entire amount of RDG's reported in Arthur Lee's fiscal year 1980/81 annual report was received that year. Further we preliminarily determine that all RDG's recorded on the 1981 balance sheet of the parent company, Arthur Lee and Sons, Ltd., were awarded to Lee Steel Strip expressly for buildings and equipment used exlusively for the production of the products under investigation.

Therefore, we have allocated the 1981 benefit over Lee Steel Strip's total 1981 stainless steel strip sales. On this basis, we calculated a subsidy of 0.27 percent *ad valorem* for Lee Steel Strip.

*D. The Iron and Steel Industry Training Board*

There are 24 industry training boards in the U.K. The Iron and Steel Industry Training Board (ISITB) sponsors various training programs aimed at maintaining the nation's pool of skills required by

the iron and steel industry and increasing employee job versatility in the event that present employment is terminated. The Board receives annual levies of up to 1 percent of payroll from iron and steel producers and makes grants to those companies required by the government to conduct training programs. The grants normally are insufficient to cover the costs incurred by the companies providing the training. BSC received several training grants under this program.

Since the training may benefit BSC's employees in their employment with BSC, we preliminarily find the grants to be countervailable. Because the grants were less than 1 percent of revenue and were expensed in the year of receipt, we considered only the grants received in 1981/82. Using this methodology, we calculated a subsidy of 0.01 percent *ad valorem* for BSC.

*E. Investment in BSC Stainless*

Petitioners alleged that BSC was receiving subsidies specifically for the production of stainless steel products. In fact, on March 28, 1974, the BSC Board, with the concurrence of the U.K. government, did approve a BSC stainless steel development strategy at a cost of about £ 130 million from fiscal years 1974/1975 through 1980/1981. No formal agreement to the strategy was required from the U.K. government because none of the individual project costs exceeded £ 50 million. The funds were used to expand cold-rolling finishing, stainless melting and continuous casting facilities, and to improve plate finishing facilities, and to develop a new process for the manufacture of stainless strip. Investment in BSC stainless was not a separate investment program but part of BSC's overall 10-year capital development strategy. The stainless steel development was partially financed with loans from the ECSC, regional development grants, and the balance from public dividend capital and new capital payments or National Loans Fund monies. However, investment under this program is included in the amounts as reported by BSC for the above-mentioned programs. Therefore, this investment in BSC stainless is already included in the subsidy calculations for the programs described above.

It would be inappropriate to assess a subsidy rate specifically to investment in BSC stainless, since we would be countervailing twice against the same subsidy benefits.

**II. Programs Preliminarily Determined Not To Confer Subsidies**

We preliminarily determine that subsidies are not being provided to manufacturers, producers, or exporters in the United Kingdom of stainless steel sheet, strip, and plate under the following programs.

*A. Industrial Investment Loans From the European Coal and Steel Community*

Article 54 of the Treaty of Paris authorizes the European Coal and Steel Community (ECSC) to provide loans to steel companies in member countries for reducing production costs, increasing production, or facilitating product marketing. Loans provided under this program are funded exclusively from ECSC borrowings on world capital markets. BSC has received three ECSC industrial development loans directly related to plants at which the products under investigation were manufactured.

All three ECSC loans which are tied directly to production of products under investigation were made to BSC during its creditworthy period. For purposes of determining whether these ECSC loans resulted in a subsidy to BSC, we compared the interest rate on ECSC loans (the period of which ranged from 5 to 20 years) to an average rate on 20-year industrial debentures. The debentures were chosen as being the most typical source of long-term debt for private British firms. The interest rates charged to BSC on the ECSC loans exceeded the average rates on 20-year industrial debentures. Therefore, we preliminarily determine that the ECSC loans tied to the production of products under investigation do not result in a subsidy.

*B. Transportation Assistance*

BSC and Arthur Lee and Sons, Ltd., appear to contract with British Rail on an arm's length basis and to pay commercial rates on stainless steel shipments. The government in its response indicates that "British Rail charges BSC what the market will bear, as is the case for a comparable non-steel sector company." Since there appears to be no preferential treatment accorded to BSC or Arthur Lee and Sons, Ltd. on shipments by rail, we preliminarily determine that the rail freight charges on stainless steel shipments are not preferential and do not result in the payment or bestowal of a subsidy.

**III. Program Preliminarily Determined Not To Be Used**

*Loans From the European Investment Bank*

The European Investment Bank (EIB) was created by the Treaty of Rome establishing the EEC to fund projects that serve regional needs in Europe. Article 130 of the Treaty of Rome authorizes the EIB to make loans and guarantee financial projects in all sectors of the economy. These projects include the provision of funds to further the development of low income regions. Funds are drawn from debt instruments floated on world capital markets and from investment earnings. Because EIB loans are designed to serve regional needs, we have in past investigations found them to be countervailable when the interest rate was less than the rate which would have been available commercially from a private lender without government intervention.

From October 1973 through December 1977, BSC received 18 EIB loans. However, none of these loans were used by BSC stainless steelmaking facilities. EIB loans were tied exclusively to the production of products other than those currently under investigation. Consequently, EIB loans have not resulted in the payment of a subsidy on production or exportation of BSC's stainless steel sheet, strip, and plate.

Arthur Lee and Sons, Ltd., did not receive EIB loans.

*Verification*

In accordance with section 776(a) of the Act, we will verify data used in making our final determinations.

*Suspension of Liquidation*

In accordance with section 703 of the Act, we are directing the U.S. Customs Service to suspend liquidation of all entries of stainless steel sheet, strip, and plate which are entered, or withdrawn from warehouse, for consumption, on or after the date of publication of this notice in the **Federal Register** and to require a cash deposit or bond for each such entry of the merchandise in the amounts indicated below:

| Manufacturer/producer/exporter | Ad valorem rate |
|---|---|
| British Steel Corporation: | |
| Stainless steel sheet | 19.31 |
| Stainless steel plate | 19.31 |
| Arthur Lee and Sons, Ltd.: Stainless steel strip | 0.00 |
| All other producers, not excluded from these determinations of stainless steel sheet, strip and plate | 19.31 |

Since the response of Arthur Lee and Sons, Ltd. concerning regional development grants was unclear, we are not excluding this company from our preliminary determinations. However, since the regional development grants that might benefit products under investigation appear to be *de minimis*, we are setting a zero rate for bonding purposes for Arthur Lee and Sons, Ltd.

This suspension will remain in effect until further notice.

*ITC Notifications*

In accordance with section 703(f) of the Act, we will notify the ITC of our determinations. In addition, we are making available to the ITC all nonprivileged and nonconfidential information relating to these investigations. We will allow the ITC access to all privileged and confidential information in our files, provided the ITC confirms that it will not disclose such information, either publicly or under an administrative protective order, without the written consent of the Deputy (for Policy) to the Deputy Assistant Secretary for Import Administration.

*Public Comment*

In accordance with 19 CFR 355.35, if requested, we will hold a public hearing to afford interested parties an opportunity to comment on these preliminary determinations at 10:00 AM on February 25, 1983, at the U.S. Department of Commerce, Room B-841, 14th Street and Constitution Avenue, N.W., Washington, D.C. 20230. Individuals who wish to participate in the hearing must submit a request to the Deputy (for Policy) to the Deputy Assistant Secretary for Import Administration, Room 3703, at the above address within 10 days of this notice's publication. Requests should contain: (1) The party's name, address, and telephone number; (2) the number of participants; (3) the reason for attending; and (4) a list of the issues to be discussed. In addition, prehearing briefs must be submitted to the Deputy (for Policy) to the Deputy Assistant Secretary by February 18, 1983. Oral presentations will be limited to issues raised in the briefs.

All written views should be filed in accordance with 19 CFR 355.34, within 30 days of this notice's publication, at the above address and in at least 10 copies.

**Judith Hippler Bello,**

*Deputy (for Policy) to the Deputy Assistant Secretary for Import Administration.*

February 4, 1983.

**Appendix**

*Description of Products*

For purposes of these investigations:

(1) The term *"stainless steel sheet, and strip"* covers hot or cold-rolled stainless steel sheet or strip products, excluding hot or cold-rolled stainless steel strip not over 0.01 inch in thickness, as currently provided for in items 607.7610, 607.9010, 607.9020, 608.4300, and 608.5700 of the *Tariff Schedules of the United States Annotated (TSUSA).*

Hot-rolled stainless steel sheet covers, hot-rolled stainless steel sheet whether or not corrugated or crimped and whether or not pickled; not cold-rolled; not cut, not pressed, and not stamped to non-rectangular shape; not coated or plated with metal; and under 0.1875 inch in thickness and over 12 inches in width.

Hot-rolled stainless steel strip is a flat-rolled stainless steel product, whether or not corrugated or crimped, and whether or not pickled; not cold-rolled; not cut, not pressed, and not stamped to non-rectangular shape; and under 0.1875 inch in thickness and not over 12 inches in width. Hot-rolled stainless steel strip, including razor blade strip, not over 0.01 inch in thickness is not included.

Cold-rolled stainless steel sheet covers cold-rolled stainless steel sheet products whether or not corrugated or crimped and whether or not pickled; not cut, not pressed and not stamped to non-rectangular shape; not coated or plated with metal; and under 0.1875 inch in thickness and over 12 inches in width.

Cold-rolled stainless steel strip is a flat-rolled stainless steel product, whether or not corrugated or crimped, and whether or not pickled; not cut, not pressed, and not stamped to non-rectangular shape; and under 0.1875 inch in thickness and over 0.50 inch but not over 12 inches in width. Cold-rolled stainless steel strip, including razor blade strip, not over 0.01 inch in thickness is not included.

(2) The term *"stainless steel plate"* covers stainless steel plate products as provided for in items 607.7605 and 607.9005 of the TSUSA. Stainless steel plate is a flat-rolled product, whether or not corrugated or crimped, in coils or cut to length, 0.1875 inches or more in thickness and over 8 inches in width or if cold-rolled over 12 inches in width.

[FR Doc. 83-3688 Filed 2-9-83; 8:45 am]

BILLING CODE 3510-25-M

## DEPARTMENT OF EDUCATION

### Innovative Programs for Severely Handicapped Children

**AGENCY:** Department of Education.

**ACTION:** Notice of proposed annual funding priorities.

**SUMMARY:** The Secretary proposes annual funding priorities for grants for Innovative Programs for Severely Handicapped Children. To ensure wide and effective use of program funds, the Secretary proposes eight priorities to direct funds to the areas of greatest need during Fiscal Year 1983. A separate competition will be established for each priority.

**DATES:** Comments must be received on or before March 11, 1983.

**ADDRESSES:** Comments should be addressed to: R. Paul Thompson, Special Education Programs, Department of Education, 400 Maryland Avenue, SW., Donohoe Building, Room 4918, Washington, D.C. 20202.

**FOR FURTHER INFORMATION CONTACT:** R. Paul Thompson, (202) 472-7993.

**SUPPLEMENTARY INFORMATION:**

**Priorities**

(1) *Approaches to Total Life Planning for Deaf-Blind Children and Youth.* This priority supports projects which implement innovative procedures for the development of total life planning for deaf-blind children and youth. The planning must include: (a) The assessment of cognitive, affective, and psychomotor skills and capacities of project participants; (b) an identification of services which are essential to meet the needs of the participants and which will provide for the maximization of their potential as they approach adulthood; (c) the development of strategies for life planning individualized for each project participant, with provision for modifying the planning on at least an annual basis; and (d) strategies for the application of the individualized planning designed for project participants, to non-project deaf-blind children and youth. Approximately $1,240,000 is expected to be available for this competition.

(2) *Pre-vocational and Vocational Training for Deaf-Blind Children and Youth.* This priority supports projects which design, implement, and disseminate innovative practices in the pre-vocational and vocational education of deaf-blind children and youth. This practices must extend beyond, expand upon, complement, or supplement

existing best practices. Also considered innovative for the purpose of this priority are feasible applications of practices still in the developmental stage in research and other experimental programs. Approximately $480,000 is expected to be available for this competition.

(3) *Identification of At-Risk Deaf-Blind Children and Youth.* This priority supports projects which design and implement innovative strategies for the early identification of children and youth with apparent visual and auditory impairments who are at-risk of being categorized as deaf-blind. The projects should devise strategies for providing relevant information to and gaining the cooperation of educational, medical, and social service providers. Projects must include procedures and planning for identification of handicapped children and youth such as those procedures mandated under Part B of the Education of the Handicapped Act, as amended. Approximately $480,000 is expected to be available for this competition.

(4) *Adaptation/Utilization of Curricula for Deaf-Blind Children and Youth.* This priority supports projects which implement innovative strategies to develop and demonstrate the effectiveness of individualized educational programming for deaf-blind children and youth. The curricula may include (a) new approaches unique to work with deaf-blind children and youth; (b) best practices currently in use with children and youth which have potential for being modified to meet individual differences; or (c) best practices in educational programming for other types of handicapped or non-handicapped age peers adapted to meet the educational needs of the deaf-blind children and youth. Approximately $480,000 is expected to be available for this competition.

(5) *Non-directed Demonstration Projects for Deaf-Blind Children and Youth.* This priority supports projects designed to demonstrate specific, viable procedures for meeting significant educational needs of deaf-blind children and youth. The content of the demonstration projects is limited only by the overall mission of the program—to demonstrate innovative and effective age-appropriate approaches to the education of deaf-blind children and youth in the least restrictive environments. Applicants proposing to conduct the projects must fully describe and justify the selection of the focus and particular approach to be demonstrated. Approximately $500,000 is expected to be available for this competition.

(6) *Independent Living Skills Training for Severely Handicapped Youth.* This priority supports projects which design, implement, evaluate, and disseminate innovative cost effective methods for the provision of independent living skills training for severely handicapped youth, ages 16 through 21 years of age, making the transition from "educational" to home/community environments. These approaches should be longitudinal in nature and build over time the highest possible level of independent, active, and cooperative functioning of these youth in a variety of integrated school and community settings. The projects should also be designed to increase both the quality and frequency of meaningful interactions of severely handicapped youth with handicapped and nonhandicapped peers and adults. Approximately $360,000 is expected to be available for this competition.

(7) *Parent Involvement in Provision of Educational Services and Life-Long Planning for Severely Handicapped Children and Youth.* This priority supports innovative projects designed to increase the involvement of parents or surrogates in the development, establishment, and evaluation of individualized educational programs for severely handicapped children and youth, and in the life-long planning for these persons. Projects should promote the organization and effective operation of parent groups in the identification and utilization of fiscal and personnel resources for ensuring quality educational services to severely handicapped children and youth. Parent groups may not engage in any type of advocacy activity. Approximately $360,000 is expected to be available for this competition.

(8) *Non-directed Demonstration Projects for Severely Handicapped Children and Youth.* This priority supports projects designed to demonstrate specific, viable procedures for meeting significant educational needs of severely handicapped (other than deaf-blind) children and youth. The content of the demonstration projects is limited only by the overall mission of the program—to demonstrate innovative and effective approaches to the education of severely handicapped children in least restrictive environments. Applicants proposing to conduct the projects must fully describe and justify the selection of the focus and particular approach to be demonstrated. Approximately $480,000 is expected to be available for this competition.

**Invitation to Comment**

Interested persons are invited to submit comments and recommendations regarding the proposed priorities. Written comments and recommendations may be sent to the address given at the beginning of this document. All comments received on or before the 30th day after publication of this document will be considered before the Secretary issues final priorities. All comments submitted in response to these proposed priorities will be available for public inspection, during and after the comment period, in Room 4918, Donohoe Building, 400 Sixth Street, SW., Washington, D.C. between the hours of 8:30 a.m. and 4:00 p.m., Monday through Friday of each week except Federal holidays.

(Catalog of Federal Domestic Assistance No. 84.086, Innovative Programs for Severely Handicapped Children)

Dated: February 7, 1983.

**T. H. Bell,**

*Secretary of Education.*

[FR Doc. 83-3581 Filed 2-9-83; 8:45 am]

BILLING CODE 4000-01-M

## DEPARTMENT OF ENERGY

### Solicitation for a Single, Cost-Shared Grant to Develop and Produce a One Hour Long Television Documentary Film on Fusion Energy

**AGENCY:** Office of the Director of Public Affairs, DOE.

**ACTION:** Notice of solicitation.

**SUMMARY:** The U.S. Department of Energy (DOE) is issuing a solicitation for a single cost-shared grant, number DE-OF01-83ER54017, to develop and produce a one hour long television documentary film on fusion energy. The DOE will provide up to $10,000 for the development of the film and up to 25% for production of the film, for a total DOE share of the project funding not to exceed $50,000. The film will be the property of the grantee and will be subject to the usual limited rights provided to the Federal government. Complete applications are due by March 25, 1983.

**ADDRESSES:** Single copies of the solicitation can be obtained by writing to: U.S. Department of Energy, Office of Procurement Operations, ATTN: Document Control Specialist, Solicitation Number: DE-OF01-83ER54017, P.O. Box 2500, Washington, D.C. 20013.

Issued in Washington, D.C., on February 4, 1983.

Hilary J. Rauch,

*Director, Procurement and Assistance Management Directorate.*

[FR Doc. 83-3561 Filed 2-9-83; 8:45 am]

BILLING CODE 6450-01-M

## Federal Energy Regulatory Commission

**[Docket No. CP83-151-000]**

### Carnegie Natural Gas Co.; Application

February 7, 1983.

Take notice that on January 12, 1983, Carnegie Natural Gas Company (Applicant), 800 Regis Avenue, Pittsburgh, Pennsylvania 15236, filed in Docket No. CP83-151-000 an application pursuant to Section 7(c) of the Natural Gas Act for a certificate of public convenience and necessity authorizing the sale for resale of natural gas to New Jersey Natural Gas Company (New Jersey Natural), all as more fully set forth in the application which is on file with the Commission and open to public inspection.

Pursuant to a gas sales agreement dated December 14, 1982, Applicant proposes to sell 40,000 dt equivalent of natural gas per day on a best-efforts basis to New Jersey Natural. Applicant states that it would charge New Jersey Natural a price equal to that which Applicant pays Texas Eastern Transmission Corporation (Texas Eastern) plus $.03 per dt equivalent. The term of this agreement is for a period not greater than one year.

Applicant states that due to the depressed condition of its primary market, the steel manufacturing facilities of United States Steel Corporation in the Pittsburgh, Pennsylvania, area, its ability to sell natural gas has been severely impaired. As a consequence Applicant states that it expects to fall below its take-or-pay obligation with Texas Eastern. Applicant seeks to avoid imminent take-or-pay penalties by this proposed sale to New Jersey Natural.

The application states that New Jersey Natural would take delivery of the gas in Green County, Pennsylvania, at Texas Eastern's Measuring Station 008, 1275, or such other existing interconnection as mutually agreed to by buyer, seller, and Texas Eastern. Contingent on a contract for transportation, Texas Eastern, it is asserted, would transport the volumes to New Jersey Natural also at a mutually agreeable point.

Any person desiring to be heard or to make any protest with reference to said application should on or before February 25, 1983 file with the Federal Energy Regulatory Commission, Washington, D.C. 20426, a motion to intervene or a protest in accordance with the requirements of the Commission's Rules of Practice and Procedure (18 CFR 385.214 or 385.211) and the Regulations under the Natural Gas Act (18 CFR 157.10). All protests filed with the Commission will be considered by it in determining the appropriate action to be taken but will not serve to make the protestants parties to the proceeding. Any person wishing to become a party to a proceeding or to participate as a party in any hearing therein must file a motion to intervene in accordance with the Commission's Rules.

Take further notice that, pursuant to the authority contained in and subject to jurisdiction conferred upon the Federal Energy Regulatory Commission by Sections 7 and 15 of the Natural Gas Act and the Commission's Rules of Practice and Procedure, a hearing will be held without further notice before the Commission or its designee on this application if no motion to intervene is filed within the time required herein, if the Commission on its own review of the matter finds that a grant of the certificate is required by the public convenience and necessity. If a motion for leave to intervene is timely filed, or if the Commission on it own motion believes that a formal hearing is required, further notice of such hearing will be duly given.

Under the procedure herein provided for, unless otherwise advised, it will be unnecessary for Applicant to appear or be represented at the hearing.

Kenneth F. Plumb,

*Secretary.*

[FR Doc. 83-3546 Filed 2-9-83; 8:45 am]

BILLING CODE 6717-01-M

**[Project No. 4663-001]**

### Cookeville, Tennessee; Surrender of Preliminary Permit

February 7, 1983.

Take notice that the City of Cookeville, Tennessee, Permittee for the proposed Burgess Falls Hydroelectric Project No. 4663, has requested that its preliminary permit be terminated. The permit was issued on October 13, 1981, and would have expired on September 30, 1983. The project would have been located on the Falling Water River in Putnam County, Tennessee.

The Permittee filed its request on January 24, 1983, and the surrender of the preliminary permit for Project No. 4663 is deemed accepted as of the date of this notice.

Kenneth F. Plumb,

*Secretary.*

[FR Doc. 83-3547 Filed 2-9-83; 8:45 am]

BILLING CODE 6717-01-M

**[Docket Nos. ER82-673-003 and ER82-673-004]**

### Kentucky Utilities Co.; Order Denying Rehearing

Issued: February 4, 1983.

On December 15, 1982, Kentucky Utilities Company (KU) filed a request for rehearing of the Commission's order of December 1, 1982, in which the Commission revised the suspension period for the Step I rates which apply to Jackson Purchase from one day to five months. The order also required KU to refund the difference between rates filed by KU and the charges that would have been collected under the rate previously in effect. On December 30, 1982, the Cities of Barbourville, Bardstown, Benham, Corbin, Falmouth, Madisonville, and Providence, Kentucky, the Electric and Water Plant Board of Frankfort, Kentucky, and Berea College, in Berea, Kentucky ("Municipals") also filed a request for rehearing of the December 1, 1982 order.

KU argues that the December 1, 1982 order is illegal to the extent that it requires KU to refund the entire difference between the charges under the lawfully filed and effective rate and the charges that would have been collected under the rate previously in effect. Additionally, KU argues that the attempt to retroactively alter the original September 22, 1982 order is illegal; that the Commission has departed from its practice of not allowing the suspension period to become subject to debate; that the Commission original order suspending the rates to Jackson Purchase for one day was correct; and that the December 1 order will adversely affect the settlement process.

The Municipals also argue that the December 1 order was in error. They assert that the suspension policy articulated in *West Texas Utilities Co.*, 18 FERC ¶ 61,189 (1982), does not contemplate the Commission's differentiation among individual wholesale customers in determining the suspension period; that the Commission's disparate treatment of KU's wholesale customers represents a change in policy, which is procedurally invalid; that, in suspending Jackson Purchase's rates for a different length of time than those applicable to other

customers, the Commission has unlawfully discriminated among customers and prejudged the rate design issue in another docket (*i.e.*, whether Jackson Purchase should be in a separate class); and, finally, that KU's Step I rates produce substantially excessive revenues and should have been suspended for five months. Municipals request that the Commission revise the December 1, 1982 order to grant the other full requirements customers the same five month suspension of Step I rates as that granted to Jackson Purchase.

**Discussion**

Having considered the above arguments, the Commission concludes that the December 1, 1982 order is correct and that the requests for rehearing should be denied. A response to the above arguments is not necessary, except with respect to the Municipals' argument that the December 1, 1982 order unduly discriminates between Jackson Purchase and other customers.

In our view, the December 1, 1982 order does not unduly discriminate between these customers. KU has proposed a Step I rate increase to fourteen wholesale customers, including Jackson Purchase. KU directly assigned to Jackson Purchase certain radial transmission lines rather than "rolling-in" those facilities for cost allocation purposes. Jackson Purchase is the only customer affected by KU's rate increase which had transmission facilities directly assigned to it. The other customers were assigned transmission facilities on a "rolled-in" basis. "Differences in rates are justified where they are predicated upon differences in fact * * *" *St. Michael's Utility Commission* v. *FPC*, 377 F.2d 912, 915 (4th Cir. 1967). The different methods of allocating costs employed by KU result in different cost consequences to the customers and justify different suspension periods for Jackson Purchase and the remaining customers.

Commission orders:

(A) The requests for rehearing filed by KU and Municipals on December 15, 1982, and December 30, 1982, are hereby denied.

(B) The Secretary shall promptly publish this order in the **Federal Register.**

By the Commission.

**Kenneth F. Plumb,**

*Secretary.*

[FR Doc. 83-3548 Filed 2-9-83; 8:45 am]

BILLING CODE 6717-01-M

**[Docket No. CP83-160-000]**

## Michigan Wisconsin Pipe Line Co.; Request Under Blanket Authorization

February 7, 1983.

Take notice that on January 18, 1983, Michigan Wisconsin Pipe Line Company (Applicant), One Woodward Avenue, Detroit, Michigan 48226, filed in Docket No. CP83-160-000 a request pursuant to Section 157.205 of the Regulations under the Natural Gas Act (18 CFR 157.205) that Applicant proposes to add a new delivery point to Northern Indiana Public Service Company (NIPSCO) at Monroe, Indiana, under the authorization issued in Docket No. CP82-480-000 pursuant to Section 7 of the Natural Gas Act, all as more fully set forth in the request on file with the Commission and open to public inspection.

Applicant proposes the construction and operation of a meter station for delivery of natural gas to NIPSCO at Monroe, Indiana. It is stated that sales of natural gas by Applicant to NIPSCO are made pursuant to the service agreement between the parties dated June 22, 1979, as amended. It is asserted the NIPSCO has requested the new delivery point to establish a new source of supply of natural gas to supply a currently existing distribution system and augment an existing source of supply which is not satisfactorily serving industrial, commercial, and residential natural gas requirements of the community of Monroe, Indiana. It is further stated that the maximum daily deliveries at the Monroe delivery point would not exceed 3,000 Mcf and that the deliveries are within NIPSCO's currently existing peak and annual entitlements.

Any person on the Commission's staff may, within 45 days after issuance of the instant notice by the Commission, file pursuant to Rule 214 of the Commission's Procedural Rules (18 CFR 385.214) a motion to intervene or notice of intervention and pursuant to Section 157.205 of the Regulations under the Natural Gas Act 18 CFR 157.205) a protest to the request. If no protest is filed within the time allowed therefor, the proposed activity shall be deemed to be authorized effective the day after the time allowed for filing a protest. If a protest is filed and not withdrawn within 30 days after the time allowed for filing a protest, the instant request shall be treated as an application for authorization pursuant to Section 7 of the Natural Gas Act.

**Kenneth F. Plumb,**

*Secretary.*

[FR Doc. 3559 Filed 2-9-83; 8:45 am]

BILLING CODE 6717-01-M

**[Docket No. CP83-154-000]**

## Northern Natural Gas Company, Division of InterNorth, Inc.; Request Under Blanket Authorization

February 7, 1983.

Take notice that on January 12, 1983, Northern Natural Gas Company, Division of InterNorth, Inc. (Northern), 2223 Dodge Street, Omaha, Nebraska 68102, filed in Docket No. CP83-154-000 a request pursuant to Section 157.205 of the Regulations under the Natural Gas Act (18 CFR 157/205) that Northern proposes to abandon and remove certain measurement and branchline facilities used to provide deliveries of natural gas to Metropolitan Utilities District (MUD) at Omaha, Douglas County, Nebraska, and to reassign volumes of gas delivered at certain town border stations, under the authorization issued in Docket No. CP82-401-000 pursuant to Section 7 of the Natural Gas Act, all as more fully set forth in the request on file with the Commission and open to public inspection.

Northern states that by order issued in Docket No. G-14786 it was authorized to construct the subject measurement and branchline facilities, the Millard, Nebraska, Town Border Station No. 1, to provide natural gas service to MUD for resale in the city of Millard, Nebraska, which facility was later annexed and became part of the City of Omaha, Nebraska. However, Northern states that it is currently experiencing problems with the 3-inch branchline serving the Millard facility. Northern further states that the branchline is located in a heavily encroached residential area and crossed Hell Creek, a site of constant erosion.

Consequently, Northern proposes to abandon and remove the Millard, Nebraska, Town Border Station No. 1 and to abandon approximately 3.4 miles of 3-inch branchline. Northern states that MUD has agreed to extend its distribution facilities to serve Omaha prior to the proposed abandonment to assure continuity of service. In accordance with the above proposal, Northern further states that it would make additional deliveries to the existing Omaha, Nebraska, Town Border Station No. 1A for resale in Omaha.

Northern further states that no additional facilities would be required at the Omaha, Nebraska, Town Border Station No. 1A.

Any person or the Commission's Staff may, within 45 days after issuance of the instant notice by the Commission, file pursuant to Rule 214 of the Commission's Procedural Rules (18 CFR 385.214) a motion to intervene or notice of intervention and pursuant to § 157.205 of the Regulations under the Natural Gas Act (18 CFR 157.205) a protest to the request. If no protest is filed within the time allowed therefor, the proposed activity shall be deemed to be authorized effective the day after the time allowed for filing a protest. If a protest is filed and not withdrawn within 30 days after the time allowed for filing a protest, the instant request shall be treated as an application for authorization pursuant to Section 7 of the Natural Gas Act.

**Kenneth F. Plumb,**

*Secretary.*

[FR Doc. 83-3549 Filed 2-9-83; 8:45 am]

BILLING CODE 6717-01-M

---

**[Docket No. CP83-162-000]**

## Northwest Central Pipeline Corp.; Request Under Blanket Authorization

February 7, 1983.

Take notice that on January 19, 1983, Northwest Central Pipeline Corporation (Applicant), P.O. Box 25128, Oklahoma City, Oklahoma 73125, filed in Docket No. CP83-162-000 a request pursuant to Section 157.205 of the Regulations under the Natural Gas Act (18 CFR 157.205) that Applicant proposes to abandon by reclaim and in place certain lateral line and meter facilities in Butler County, Kansas, and to abandon the gas service through said facilities under the authorization issued in Docket No. CP82-479-000 pursuant to Section 7 of the Natural Gas Act, all as more fully set forth in the request on file with the Commission and open to public inspection.

Applicant states that the 4-inch and 3-inch pipeline and metering facilities are no longer required as the pipeline was originally constructed in 1928 to make the sale of gas to Phillips Pipe Line Company at its Ramsey Pump Station. This station is no longer used by Phillips and no other customers are being served from this line, it is asserted. The estimated cost to reclaim these facilities is $5,660, with an estimated salvage value of $2,540, Applicant asserts. Applicant further requests approval to abandon the gas service through these facilities.

Any person or the Commission's staff may, within 45 days after issuance of the instant notice by the Commission, file pursuant to Rule 214 of the Commission's Procedural Rules (18 CFR 385.214) a motion to intervene or notice of intervention and pursuant to Section 157.205 of the Regulations under the Natural Gas Act (18 CFR 157.205) a protest to the request. If no protest is filed within the time allowed therefor, the proposed activity shall be deemed to be authorized effective the date after the time allowed for filing a protest. If a protest is filed and not withdrawn within 30 days after the time allowed for filing a protest, the instant request shall be treated as an application for authorization pursuant to Section 7 of the Natural Gas Act.

**Kenneth F. Plumb,**

*Secretary.*

[FR Doc. 83-3550 Filed 2-9-83; 8:45 am]

BILLING CODE 6717-01-M

---

**[Docket No. CP83-150-000]**

## Texas Eastern Transmission Corp.; Application

February 7, 1983.

Take notice that on January 12, 1983, Texas Eastern Transmission Corporation (Applicant), P.O. Box Box 2521, Houston, Texas 77252, filed in Docket No. CP83-150-000 an application pursuant to Section 7(c)(1) of the Natural Gas Act for a certificate of public convenience and necessity authorizing the transportation of natural gas for New Jersey Natural Gas Company (New Jersey), for a term of 6 months from the date of initial delivery, all as more fully set forth in the application which is on file with the Commission and open to public inspection.

It is asserted that New Jersey has purchased a quantity of natural gas from Carnegie Natural Gas Company (Carnegie). Applicant proposes to receive from Carnegie, by displacement, quantities of natural gas up to a maximum daily transportation quantity of 40,000 dt equivalent per day for the account of New Jersey at the existing point of interconnection between Applicant and Carnegie located at Applicant's meter station 1275 in Green County, Pennsylvania, or at other mutally agreeable existing delivery points in Applicant's Zone C and to transport and redeliver equal quantities, less quantities retained for applicable shrinkage, to New Jersey at the existing point of interconnection between Applicant and New Jersey located at meter station 953 in MIddlesex County, New Jersey. It is stated that Applicant and New Jersey have executed a gas transportation agreement dated January 10, 1983.

New Jersey would pay Applicant under Applicant's presently applicable effective basis Rate Schedule TS-1, a rate of 18.72 cents per dt equivalent delivered by Applicant to New Jersey, it is explained. In addition, New Jersey would pay Applicant under Applicant's presently applicable effective Rate Schedule TS-1 excess rate 21.5 cents per dt equivalent delivered which, when added to quantities delivered by Applicant to New Jersey under Applicant's Rate Schedule TS-1, non-firm SS-II and other transportation agreements, exceed the combined total curtailment of natural gas sales to New Jersey under Applicant's firm sales rate schedules, it is stated. Applicant states that it would retain for applicable shrinkage an amount of gas equal to 5 percent of the quantities transported for the period from April 16 through November 15 of each year and 11 percent for the period from November 16 through April 15 of each year.

It is stated that the proposed service would enable New Jersey to implement its agreement to purchase gas from Carnegie and to help fulfill its need for a greater natural gas supply.

Any person desiring to be heard or to make any protest with reference to said application should on or before February 25, 1983, file with the Federal Energy Regulatory Commission, Washington, D.C. 20426, a motion to intervene or a protest in accordance with the requirements of the Commission's Rules of Practice and Procedure (18 CFR 385.214 or 385.211) and the Regulations under the Natural Gas Act (18 CFR 157.10). All protests filed with the Commission will be considered by it in determining the appropriate action to be taken but will not serve to make the protestants parties to the proceeding. Any person wishing to become a party to the proceeding or to participate as a party in any hearing therein must file a motion to intervene in accordance with the Commission's Rules.

Take further notice that, pursuant to the authority contained in and subject to the jurisdiction conferred upon the Federal Energy Regulatory Commission by sections 7 and 15 of the Natural Gas Act and the Commission's Rules of Practice and Procedure, a hearing will be held without further notice before the Commission or its designee on this application if no motion to intervene is filed within the time required herein, if the Commission on its own review of the matter finds that a grant of the

certificate is required by the public convenience and necessity. If a motion for leave to intervene is timely filed, or if the Commission on its own motion believes that a formal hearing is required, further notice of such hearing will be duly given.

Under the procedure herein provided for, unless otherwise advised, it will be unnecessary for Applicant to appear or be represented at the hearing.

**Kenneth F. Plumb,**

*Secretary.*

[FR Doc. 83-3551 Filed 2-9-83; 8:45 am]

BILLING CODE 6717-01-M

---

**[Docket No. CP77-358-004]**

## Texas Gas Transmission Corp.; Motion To Vacate Order

February 7, 1983.

Take notice that on January 3, 1983, Texas Gas Transmission Corporation (Texas Gas), 3800 Frederica Street, Owensboro, Kentucky 42301, filed in Docket No. CP77-358-004 a motion pursuant to Section 385.212 of the Commission's Rules of Practice and Procedure (18 CFR 385.212) to vacate the order issued August 19, 1981, in Docket No. CP77-358, all as more fully set forth in the motion to vacate which is on file with the Commission and open to public inspection.

It is stated that by order issued August 19, 1981, the order issued August 5, 1977, as amended, in Docket No. CP77-358 was amended so as to authorize the transportation of up to 400 Mcf of natural gas per day for the account of Kerr Finishing Division of Allied Products Corporation (Kerr) for an additional one-year term commencing with the resumption of deliveries. It is further asserted that Kerr had requested Texas Gas to seek a one-year extension of its original authorization in order for Kerr to receive natural gas at one of its plants for which it has paid its producer and had not received.

Texas Gas asserts that due to difficulties with the well from which Kerr was to receive natural gas production, the resumption of the transportation service authorized herein did not commence. Texas Gas further asserts that Kerr has informed Texas Gas that it desires to cancel its existing transportation arrangement with Texas Gas.

Any person desiring to be heard or to make any protest with reference to said motion should on or before February 25, 1983, file with the Federal Energy Regulatory Commission, Washington, D.C. 20426, a petition to intervene or a protest in accordance with the requirements of the Commission's Rules of Practice and Procedure (18 CFR 1.8 or 1.10). All protests filed with the Commission will be considered by it in determining the appropriate action to be taken but will not serve to make the protestants parties to the proceeding. Any person wishing to become a party to a proceeding or to participate as a party in any hearing therein must file a petition to intervene in accordance with the Commission's Rules.

**Kenneth F. Plumb,**

*Secretary.*

[FR Doc. 83-3552 Filed 2-9-83; 8:45 am]

BILLING CODE 6717-01-M

---

**[Docket No. CP83-127-000]**

## Tidal Transmission Co.; Application

February 7, 1983.

Take notice that on December 13, 1982, Tidal Transmission Company (Applicant), 1200 Milam, Suite 3300, Houston, Texas 77002, filed in Docket No. CP83-127-000 an application pursuant to Section 7(b) of the Natural Gas Act for permission and approval to abandon the facilities and service authorized in Docket No. CP68-323, all as more fully set forth in the application which is on file with the Commission and open to public inspection.

Applicant seeks to abandon pipeline facilities consisting primarily of 28.4 miles of 16-inch pipe, 39.6 miles of 12-inch pipe, 11.7 miles of 10-inch pipe, and 4.0 miles of 6-inch pipe. Applicant states such facilities are used in the transportation of natural gas from the West Cameron area, offshore Louisiana, to a point of interconnection with the facilities of Natural Gas Pipeline Company of America in Cameron Parish, onshore Louisiana. It is explained that the abandonment authorization is sought so that United States Natural Gas Corporation (US Natural) can acquire all the facilities of Applicant and assume the responsibility of delivering natural gas pursuant to all outstanding transportation arrangements currently held by, and being served by, Applicant.

Applicant's proposed abandonment and US Natural's acquisition are part of a planned corporate restructuring by their parent company, Tatham Pipeline Company. It is contended that the proposed arrangement is operationally more efficient.

Any person desiring to be heard or to make any protest with reference to said application should on or before February 25, 1983, file with the Federal Energy Regulatory Commission, Washington, D.C. 20426, a motion to intervene or a protest in accordance with the requirements of the Commission's Rules of Practice and Procedure (18 CFR 385.214 or 385.211) and the Regulations under the Natural Gas Act (18 CFR 157.10). All protests filed with the Commission will be considered by it in determining the appropriate action to be taken but will not serve to make the protestants parties to the proceeding. Any person wishing to become a party to a proceeding or to participate as a party in any hearing therein must file a motion to intervene in accordance with the Commission's Rules.

Take further notice that, pursuant to the authority contained in and subject to the jurisdiction conferred upon the Federal Energy Regulatory Commission by Sections 7 and 15 of the Natural Gas Act and the Commission's Rules of Practice and Procedure, a hearing will be held without further notice before the Commission or its designee on this application if no motion to intervene is filed within the time required herein, if the Commission on its own review of the matter finds that permission and approval for the proposed abandonment are required by the public convenience and necessity. If a motion for leave to intervene is timely filed, or if the Commission on its own motion believes that a formal hearing is required, further notice of such hearing will be duly given.

Under the procedure herein provided for, unless otherwise advised, it will be unnecessary for Applicant to appear or be represented at the hearing.

**Kenneth F. Plumb,**

*Secretary.*

[FR Doc. 83-3553 Filed 2-9-83; 8:45 am]

BILLING CODE 6717-01-M

---

**[Docket Nos. RP77-19-004 and RP78-88-012]**

## Transwestern Pipeline Co.; Acceptance of Withdrawal of Certain Exceptions by Operation of Rule 216

February 7, 1983.

Take notice that Transwestern Pipeline Company (Transwestern) on December 23, 1982, filed a Motion For Approval Of Interim Refund Reports And Conditionally for Withdrawal Of Certain Exceptions. Transwestern proposes to refund $38,562,177.48 on December 29, 1982. Such amount includes all amounts collected and held subject to refund in these dockets relating to Research, Development and Demonstration treatment (RD&D) of costs incurred by Transwestern in

connection with the WESCO Coal Gasification Project, except for $13,876,167 associated with its alternative claim of amortization of such costs in these dockets. Conditioned upon approval of its interim refund report on or prior to December 29, 1982, Transwestern is proposing to withdraw exceptions filed by it in these dockets addressed to the issue of whether or not it is entitled to rate base treatment of such WESCO costs. It is not proposing to withdraw and continues to assert its exceptions with respect to whether it is entitled to amortize such costs.

On December 29, 1982, the Director of the Office of Pipeline and Producer Regulation, by letter order, accepted for filing and approved the Interim Refund Report. The acceptance, however, in conditioned upon approval by the Commission of Transwestern's motion for withdrawal of certain exceptions.

The subject filing was noticed on December 23, 1982. No filings in opposition were received prior to the expiration of the 15-day period. Accordingly, the motion for withdrawal of certain exceptions is deemed accepted on January 7, 1983, by operation of 216(b) of the Commission's Rules of Practice and Procedure, 18 CFR 385.216(b).

**Kenneth F. Plumb,**

*Secretary.*

[FR Doc. 83-3554 Filed 2-9-83; 8:45 am]

BILLING CODE 6717-01-M

---

**[Docket No. CP83-116-000]**

## United States Natural Gas Corp.; Application

February 7, 1983.

Take notice that on December 6, 1982,[1] the United States Natural Gas Corporation (Applicant), 1200 Milam, Suite 3300, Houston, Texas 77002, filed in Docket No. CP83-116-000 an application pursuant to Section 7(c) of the Natural Gas Act for a certificate of public convenience and necessity authorizing the acquisition and operation of the facilities and the rendition of natural gas services of Tidal Transmission Company (Tidal) and West Lake Arthur Corporation (WLAC), all as more fully set forth in the application which is on file with the Commission and open to public inspection.

Applicant states that the purpose of this application is to obtain the necessary authorization enabling Applicant to assume the rights and obligations of Tidal under a certificate of public convenience and necessity issued September 4, 1968, in Docket No CP68-323, as amended , and to assume the rights and obligations of WLAC under certificates of public convenience and necessity issued in Docket Nos. CP80-225 and CP81-115, on April 15, 1980, and January 26, 1982, respectively. Applicant proposes to succeed to the facilities and services of Tidal and WLAC, wholly-owned subsidiaries of Tatham Pipeline Company (Tatham) pursuant to a proposed corporate reorganization of the divisions and subsidiaries of Tatham. Applicant states that it would perform all authorized obligations of Tidal and WLAC.

The facilities proposed to be acquired from Tidal include 28.4 miles of 16-inch pipe, 39.6 miles of 12-inch pipe, 11.7 miles of 10-inch pipe, 4.0 miles of 6-inch pipe, and several taps. Applicant states that the facilities are used in the transportation of natural gas from the West Cameron area, offshore Louisiana, to a point of interconnection with the facilities of Natural Gas Pipeline Company of America in Cameron Parish, onshore Louisiana.

The facility proposed to be acquired from WLAC is a 1.8-mile length of 8-inch pipeline located in West Lake Arther Field, Jefferson Davis Parish, Louisiana. Authorization granted in Docket No. CP81-115 allowed WLAC to utilize the facility in the sale of gas to its affiliate, WLA-Distribution, it is explained.

Applicant proposes to operate the facilities of Tidal and WLAC as an integrated pipeline system and would adopt the currently effective rate schedules of Tidal and WLAC. It is indicated that the reorganization would be accomplished by a stock for stock exchange and Applicant would assume all of the facilities of Tidal and WLAC and all related financial and service obligations of the two companies.

Any person desiring to be heard or to make any protest with reference to said application should on or before February 25, 1983, file with the Federal Energy Regulatory Commission, Washington, D.C. 20426, a motion to intervene or a protest in accordance with the requirements of the Commission's Rules of Practice and Procedure (18 CFR 385.214 or 385.211) and the Regulations under the Natural Gas Act (18 CFR 157.10). All protests filed with the Commission will be considered by it in determining the appropriate action to be taken but will not serve to make the protestants parties to the proceeding. Any person wishing to become a party to the proceeding or to participate as a party in any hearing therein must file a motion to intervene in accordance with the Commission's Rules.

Take further notice that, pursuant to the authority contained in and subject to the jurisdiction conferred upon the Federal Energy Regulatory Commission by Sections 7 and 15 of the Natural Gas Act and the Commission's Rules of Practice and Procedure, a hearing will be held without further notice before the Commission or its designee on this application if no motion to intervene is filed within the time required herein, if the Commission on its own review of the matter finds that a grant of the certificate is required by the public convenience and necessity. If a motion for leave to intervene is timely filed, or if the Commission on its own motion believes that a formal hearing is required, further notice of such hearing will be duly given.

Under the procedure herein provided for, unless otherwise advised, it will be unnecessary for Applicant to appear or be represented at the hearing.

**Kenneth F. Plumb,**

*Secretary.*

[FR Doc. 83-3555 Filed 2-9-83; 8:45 am]

BILLING CODE 6717-01-M

---

**[Docket No. EL82-26-000]**

## West Florida Electric Cooperative Association, Inc. and Alabama Electric Cooperative, Inc. v. Gulf Power Company; Order on Complaint, Electric Rates

Issued: February 4, 1983.

On September 1, 1982, West Florida Electric Cooperative Association, Inc. (West Florida) and its power supply agent, Alabama Electric Cooperative, Inc. (AEC), filed a complaint against Gulf Power Company (Gulf) protesting Gulf's alleged unlawful over-collection of monies for wholesale electric serviced in violation of the tariff [1] and contracts governing wholesale service to West Florida. West Florida requests that the Commission direct Gulf to: (1) Cease calculating its bills in a manner which is inconsistent with Gulf's filed tariff and which results in duplicative charges to West Florida; (2) render an accounting of the alleged overcharges commencing with the June, 1981 billings through July, 1982;[2] and (3) remit to West Florida such

[1] This application was initially tendered for filing on December 6, 1982, however, the fee required by Section 159.1 of the Regulations under the Natural Gas Act (18 CFR 159.1) was not paid until December 8, 1982; thus, filing was not completed until the latter date.

[1] West Florida receives partial requirements service at several delivery points under Wholesale Service Schedule RE, Gulf's FERC Electric Tariff, Second Revised Volume No. 1.

[2] West Florida stated in the September 1, 1982 complaint that AEC's staff computed the overcharges for this period to be $167,366.10. This

monies unlawfully collected together with appropriate interest. On October 18, 1982, Gulf filed an answer denying the allegations of the complaint and requesting that the Commission summarily reject West Florida's claims.[3] Gulf asserts that there is no factual dispute, that it has properly billed West Florida under the tariff, and that West Florida's complaint merely attempts to shift to Gulf the burden of West Florida's failure to seek timely modification of its service agreements with Gulf.

West Florida, subsequently, moved for waiver of Rule 213 to respond to Gulf's answer.[4] Gulf opposed West Florida's motion.

**Tariff Provision**

This complaint concerns the interpretation of the parties' rights and obligations under the tariff and service agreements governing Gulf's service to West Florida. The principle tariff provision at issue ("Determination of Billing Capacity") states in pertinent part:

The kilovolt-ampere billing capacity requirement shall be based on the Customer's maximum integrated fifteen (15) minute capacity requirement to the nearest kilovolt-ampere during each service month, less the capacity allocation (if any) from the Southeastern Power Administration, appropriately adjusted to preclude the duplication of any actual demand that may have been occasioned by switching of load between delivery points, provided such capacity shall not be less than seventy-five percent (75%) of the capacity established during any of the eleven (11) preceding months and in no case shall such capacity be less than seventy-five percent (75%) of the contract capacity nor less than one thousand (1,000) kilovolt-amperes.

When allocations from Southeastern Power Administration are initiated or changed or when a new delivery point is added at a point on the then existing system of the Company, the previous eleven monthly capacity requirements at each delivery point from which load is transferred shall be reduced, for the purpose of future determinations of the billing capacity requirements hereunder, to reflect the capacity requirements that would have been recorded had such new delivery point been in existence during such eleven-month period and the contract capacity at the delivery point from which the load is transferred shall be similarly adjusted.

West Florida asserts that under the terms of the tariff, billing capacity is used to determine the monthly demand charge and transmission voltage discounts. Such billing capacity is the actual monthly peak demand at each delivery point less the customer's capacity allocation (if any) to that delivery point from the Southeastern Power Administration (SEPA), subject to Gulf's ratchet clause and a minimum billing provision. In addition, West Florida states that under two circumstances the tariff provides for relaxation of the ratchet: (1) Addition of a new delivery point and (2) a change in its SEPA allocation which results in an equivalent change in its demand from Gulf. Without this provision, West Florida states that it would be obligated to pay SEPA for a new entitlement and to continue to pay Gulf for the same loan increment through operation of the ratchet. According to West Florida, the purpose of the tariff provision is to prevent such duplicative charges to the Cooperative when SEPA allocations are increased.

The pleadings indicate that on or about June 1, 1981, SEPA increased its allotment to West Florida following notice of such change to Gulf as required by SEPA's contract with Gulf. Despite this increase in the SEPA entitlement, Gulf continued to calculate its bills to West Florida on the basis of the contract demand last specified by West Florida in an executed service agreement. West Florida apparently continued to pay those bills without objection for approximately one year at which time it objected to Gulf's billing practices and asserted that, as a result of the increased SEPA entitlement, West Florida's billing capacity and contract capacity should have been modified by Gulf.[5] Because no such adjustment had been made, West Florida asserted that it had been subject to overcharges since June 1, 1981.

West Florida states in its complaint that Gulf has refused to rectify the alleged overcharge practice and reasons that Gulf's refusal to do so is inconsistent with the tariff provision quoted above. It is West Florida's view that independent notice of a change in SEPA entitlement is neither necessary nor required by the tariff, particularly inasmuch as SEPA itself provides Gulf with notice of increases in West Florida's SEPA allocation.

Gulf supports its request for summary rejection of West Florida's complaint by arguing that: (1) The tariff and service contracts, construed as a whole, require that the contract capacity for a delivery point may be changed only by written supplements; [6] (2) West Florida's conduct prior to June, 1982 demonstrates that West Florida and Gulf had a common understanding of both the nature of the contract capacity provision in the tariff and the requirement of amending the applicable service agreement when capacity needs from Gulf changed due to changes in SEPA capacity allocations; [7] and (3) a revision in contract capacity for billing purposes would require a revision of West Florida's delivery specifications since, for Gulf to apply the billing demand ratchet to other than the stated contract capacities would be a violation of the filed rate schedule. Gulf contends that it properly billed West Florida under the tariff throughout the period in question.

**Discussion**

Initially, we shall grant West Florida's motion for waiver of Rule 213 of the Commission's Rules of Practice and Procedure. Because no questions of fact are presented for hearing and the Commission is asked to resolve this matter on the basis of the pleadings, we are reluctant to summarily exclude any pertinent information. Furthermore, we believe it appropriate to allow West Florida to advise the Commission that its statement of the amount in controversy had been miscalculated.

Our review of the pertinent tariff provision indicates that West Florida is not required to provide written notification of a change in its SEPA allocation or to request an adjustment in its contract capacity before a reduced contract capacity is reflected in Gulf's

figure was subsequently modified. *See* footnote 4, *infra*.

[3] The pleadings indicate the parties' agreement that there are no material questions of fact in dispute and that the issues presented should be resolved on the basis of the pleadings rather than on evidentiary hearing.

[4] In its response, West Florida recomputes the overcharges to reflect a credit adjustment for July, 1982, based on Gulf's change in contract capacity for that month. Gulf's change was based on its determination that West Florida had submitted a written request for a service agreement modification. The overcharge is computed to be $147,794.68 for the period commencing June, 1981, through June, 1982.

[5] By letter dated June 8, 1982, West Florida informed Gulf that contract capacities for all delivery points should have changed as of June 1, 1981. Gulf responded on July 23, 1982, stating that changes in SEPA allocations have no effect on the contract capacity at any delivery point for determination of minimum billing capacity requirement and that absent West Florida's express request for a change in contract capacity through the normal contract supplements, there would be no change in contract capacity.

[6] Gulf refers to various tariff sections (including sections 9 and 10) which, according to Gulf, preclude West Florida's interpretation of the "Determination of Billing Capacity" provisions. However, sections 9 and 10 relate to consumer requests for increases in capacity and to the contract term and termination provisions. Neither section addresses changes in SEPA allocations, an issue specifically addressed in the billing section of the tariff.

[7] Gulf has supplied copies of contract capacity supplements submitted by West Florida following prior changes in SEPA capacity allocations in December, 1980, to demonstrate West Florida's earlier compliance with Gulf's tariff interpretation.

billings to West Florida. The portion of the tariff relevant to a change in West Florida's SEPA allocation provides in part as follows:

> When allocations from Southeastern Power Administration are initiated or changed * * * [the billing capacity requirements shall be reduced] and the *contract capacity* at the delivery point from which the load is transferred *shall be similarly adjusted.* (emphasis added).

Despite Gulf's assertions concerning the parties' prior or subsequent conduct, we find that this provision of the billing capacity determination clause provides on its face for an automatic billing adjustment to reflect changes in West Florida's SEPA allocation. The language expressly and unambiguously requires adjustments in the "contract capacity" as well as in the billing capacity.

We do not find it necessary to address each of Gulf's arguments in detail since we believe that the tariff language is clear on its face. Furthermore the remaining tariff provisions cited by Gulf cannot be relied upon to negate this conclusion; sections 9 and 10 of the tariff are silent with respect to changes in West Florida's SEPA allocations and such sections cannot be construed to limit or affect the express language contained in the billing demand provision. With respect to Gulf's suggestion that without written notification from West Florida a change in contract capacity would violate the filed rate schedule, we note our disagreement. As we have explained, the tariff effectively provides that a contract demand adjustment and associated billing reduction will be made automatically at such time as a change in SEPA entitlement becomes effective. The change should be accompanied by a revised service agreement specifying the then-effective contract demand, but the obligation to file an updated service agreement under Part 35 of the regulations rests on Gulf, the jurisdictional utility, rather than on West Florida. Finally, we would add that the Commission is not persuaded by Gulf's argument that West Florida's failure to provide notice of a revised contract capacity or to expressly request implementation of the tariff provision effects an operational burden on Gulf. In view of SEPA's advance notification to Gulf of the change in West Florida's allotment, Gulf should be subjected to no element of surprise.

The Commission finds that Gulf has deviated from the express billing requirements contained in its filed tariff. We shall therefore order relief as provided below.

*The Commission orders:*

(A) West Florida's motion for waiver of Rule 213 is hereby granted.

(B) Gulf shall cease billing West Florida in a manner inconsistent with Gulf's tariff as construed in this order.

(C) Gulf shall render an accounting of all past overcharges consistent with the Commission's tariff interpretation as expressed in this order within thirty (30) days of the date of this order.

(D) Within fifteen (15) days after such accounting has been made Gulf shall refund all such overcharges together with interest computed in accordance with section 35.19a of the Commission's regulations.

(E) The Secretary shall promptly publish this order in the **Federal Register.**

By the Commission.

**Kenneth F. Plumb,**

*Secretary.*

[FR Doc. 83-3557 Filed 2-9-83; 8:45 am]

BILLING CODE 6717-01-M

---

**[Docket No. CP83-158-000]**

## West Lake Arthur Corp.; Request Under Blanket Authorization

February 7, 1983.

Take notice that on January 18, 1983, West Lake Arthur Corporation (Applicant), 1200 Milam, Houston, Texas 77002, filed in Docket No. CP83-158-000 a request pursuant to Section 157.205 of the Regulations under the Natural Gas Act (18 CFR 157.205) that Applicant proposes to add a new delivery point for Cajun Natural Gas Company (Cajun) under the authorization issued in Docket No. CP82-525-000 pursuant to Section 7 of the Natural Gas Act, all as more fully set forth in the request on file with the Commission and open to public inspection.

Applicant states that it has recently contracted with Tenneco Oil Company, a Division of Tenneco Inc., for an additional supply of gas which would enable Applicant to deliver an additional 40,000 Mcf of gas per day to Cajun. To effectuate delivery of such gas, Applicant proposes to deliver gas to Cajun at a new delivery point located at the interconnection of the pipelines of Sugar Bowl Gas Corporation (Sugar Bowl) and Tennessee Gas Pipeline Company, a Division of Tenneco Inc., in Terrebonne Parish, Louisiana. Sugar Bowl, it is asserted, would transport such gas from the proposed point for Cajun. The end-use of the gas delivered to Cajun would not be changed nor would the total volumes delivered to Cajun exceed the authorized amount, it is stated.

Any person or the Commission's staff may, within 45 days after issuance of the instant notice by the Commission, file pursuant to Rule 214 of the Commission's Procedural Rules (18 CFR 385.214) a motion to intervene or notice of intervention and pursuant to § 157.205 of the Regulations under the Natural Gas Act (18 CFR 157.205) a protest to the request. If no protest is filed within the time allowed therefor, the proposed activity shall be deemed to be authorized effective the day after the time allowed for filing a protest. If a protest is filed and not withdrawn within 30 days after the time allowed for filing a protest, the instant request shall be treated as an application for authorization pursuant to Section 7 of the Natural Gas Act.

**Kenneth F. Plumb,**

*Secretary.*

[FR Doc. 83-3558 Filed 2-9-83; 8:45 am]

BILLING CODE 6717-01-M

---

**[Docket No. CP83-149-000]**

## Western Slope Gas Co.; Application

February 7, 1983.

Take notice that on January 12, 1983, Western Slope Gas Company (Applicant), P.O. Box 840, Denver, Colorado 80201, filed in Docket No. CP83-149-000 an application pursuant to § 284.127 of the Commission's Regulations authorizing Applicant to transport natural gas for Northern Natural Gas Company, Division of InterNorth, Inc. (Northern), for a term in excess of two years, all as more fully set forth in the application which is on file with the Commission and open to public inspection.

Applicant states that pursuant to the terms of a gas transportation agreement dated July 1, 1982, it began transportation service for Northern on November 18, 1982. Applicant states that it is requesting authority to provide service for Northern through November 18, 1997. Applicant asserts that Northern would deliver volumes of natural gas for its account in Boulder County, Colorado, and Applicant would redeliver the gas to Northern in Adams or Weld Counties, Colorado. Applicant further states that the estimated annual quantities of gas to be delivered are 1,971 billion Btu annually with an estimated maximum daily delivery of 27 billion Btu.

Applicant proposes to charge Northern $0.3442 per million Btu which Applicant asserts is the cost of service as calculated under the methodolgy approved in Applicant's Docket No. CP81-345-000 proceeding.

The proposal would allow Northern to receive gas supplies that are either remote from or expected to be remote from Northern's existing pipeline systems, it is stated.

Any person desiring to be heard or to make any protest with reference to said application should on or before February 25, 1983, file with the Federal Energy Regulatory Commission, Washington, D.C. 20426, a motion to intervene or a protest in accordance with the requirements of the Commission's Rules of Practice and Procedure (18 CFR 385.214 or 385.211). All protests filed with the Commission will be considered by it in determining the appropriate action to be taken but will not serve to make the protestants parties to the proceeding. Any person wishing to become a party to a proceeding or to participate as a party in any hearing therein must file a motion to intervene in accordance with the Commission's Rules.

**Kenneth F. Plumb,**

*Secretary.*

[FR Doc. 83-3556 Filed 2-9-83; 8:45 am]

BILLING CODE 6717-01-M

---

**[Docket No. CP83-144-000]**

## ANR Storage Co.; Application

February 8, 1983.

Take notice that on January 6, 1983, ANR Storage Company (Applicant), One Woodward Avenue, Detroit, Michigan 48226, filed in Docket No. CP83-144-000 an application pursuant to Section 7(c) of the Natural Gas Act for a certificate of public convenience and necessity, authorizing a natural gas storage service for Michigan Wisconsin Pipe Line Company (Michigan Wisconsin), development and operation of a gas storage field, drilling and operation of certain wells, and construction and operation of certain metering and other appurtenant facilities and a petition pursuant to § 385.207 of the Commission Rules of Practice and Procedure (18 CFR 1.7(c)) for a declaratory order clarifying the jurisdictional status of certain facilities and service, all as more fully set forth in the application which is on file with the Commission and open to public inspection.

Applicant states that pursuant to a gas storage agreement dated December 20, 1982, Michigan Wisconsin would deliver or cause to be delivered to Applicant for storage up to 45,000,000 Mcf of gas, in aggregate, at an existing point of interconnection between the pipeline systems of Applicant and Great Lakes Gas Transmission Company (Great Lakes) in Frederic Township, Crawford County, Michigan. Michigan Wisconsin, it is asserted, would be solely responsible under existing agreements with Great Lakes for all transportation and/or exchange arrangements necessary for delivery and redelivery of the storage gas at such point. It is stated that the agreement provides for injection of the storage gas during the period from April 1 through August 31 in the years 1983 through 1987 at rates up to 190,000 Mcf per day. During the periods November 1 through March 31 of the years 1984-85 through 1992-93, the agreement provides that Applicant would withdraw from storage and redeliver for Michigan Wisconsin's account daily quantities up to 100,000 Mcf per day.

Because Applicant would be unable to redeliver from storage significant daily quantities of gas without installation of additional compression facilities when the volume of gas in storage is less than 10,000,000 Mcf, it is asserted that the agreement provides that Applicant and Michigan Wisconsin would agree upon the maximum daily withdrawal quantities and the required additional compression facilities in advance of such occurrence so that Applicant can seek and obtain appropriate authorization from the Commission to install such additional compression facilities and make any necessary adjustment in charges related thereto.

It is stated that Michigan Wisconsin would supply injection compressor fuel equal to 1.4 percent of the volumes delivered for storage. All volumes withdrawn from storage for Michigan Wisconsin's account would be reduced before redelivery by 0.1 percent which percentage Applicant would retain as compensation for its compressor fuel usage, Applicant submits.

Because Applicant would use certain of its existing storage facilities in the provision of the proposed storage service, it is submitted that the agreement contains provisions permitting Applicant to reschedule the daily quantities of gas to be delivered or redelivered on any day that Applicant determines such rescheduling is necessary to prevent the impairment of Applicant's ability to meet its obligations to its other storage service customers. Applicant states further that the agreement also contains provisions for injection and withdrawal of excess daily quantities during the injection and withdrawal periods stated therein when Applicant is able to do so without jeopardizing its ability to meet its other obligations and for injection and withdrawal of such daily quantities during other periods as would be mutually agreeable.

Applicant states that Michigan Wisconsin would pay monthly a demand charge of $557,700 and a commodity charge of 19.86 cents per Mcf multiplied by the volumes of gas delivered and/or redelivered during the preceding month with provision for a credit against such monthly charges if Applicant fails to accept delivery of volumes, up to the specified maximum daily injection quantity, tendered for storage during an injection period and Applicant cannot make up such deficiency within the time permitted. The agreement, it is asserted, is for a ten year term commencing on April 1, 1983, or such later date when Applicant shall notify Michigan Wisconsin that its storage facilities are completed and ready to accept deliveries.

In order to provide the proposed storage service, Applicant proposes to develop a substantially depleted natural gas fied, the Blue Lake 18A Gas Field in Blue Lake Township, Kalkaska County, Michigan, as a natural gas storage field with a total working storage capacity of 45,000,000 Mcf for the type of storage service being proposed. Applicant expects to acquire all necessary oil and gas leases, property interests, storage and mineral rights and gas production rights necessary for conversion of such field to a natural gas storage field for approximately $49.7 million. Applicant would arrange for the continued production of the remaining recoverable intrastate gas reserves in the Blue Lake 18A Field which are committed under existing gas purchase contracts, it is explained.

To do so, Applicant proposes, upon acquisition, to sell the Blue Lake 18A Field, at its net book value, to ANR Intrastate Storage Company (ANR Intrastate), a wholly-owned subsidiary of Applicant. Concurrently with such sale, ANR Intrastate would, it is explained, lease back to Applicant for a ten year term the property, rights and interests necessary for conversion of the Blue Lake 18A Field to a natural gas storage field. It is stated that such leaseback would exclude the production rights and wells and surface production equipment and facilities which ANR Intrastate would require for continued production of the remaining recoverable intrastate gas reserves in the Blue Lake 18A Field in a manner which would satisfy convenants in the aforementioned existing gas purchase contracts which proscribe the dedication of such gas reserves to interstate commerce by segregating ANR Intrastate's gas production activities in the Blue Lake 18A Field

from Applicant's interstate natural gas storage operations.

Applicant states that it would pay to ANR Intrastate, as rent, an amount equivalent to the difference between (a) ANR Intrastate's costs of producing such remaining recoverable gas reserves, including a return on ANR Intrastate's production and storage properties equivalent to that most recently allowed by the Commission on Applicant's natural gas storage facilities and (b) ANR Intrastate's revenues from the sale of such remaining recoverable gas reserves and any condensate which may be recovered. The rental payments have been structured to assure that ANR Intrastate would earn no more than the return on its property which the Commission allows for Applicant, it is submitted.

To provide the proposed storage service, Applicant asserted that it would use its existing 36-inch pipeline, 24-inch lateral and Cold Springs 12 Compressor Station and would construct at such station certain additional facilities including gas metering, heating and regulating facilities and facilities for the removal of water and liquid hydrocarbons from the gas during withdrawal operations from the Blue Lake 18A Field. The reworking of two existing production wells, the drilling of two new injection/withdrawal wells, and the construction of a storage field gathering system and appurtenances, including 1.2 miles of 12-inch pipeline from such station to the Blue Lake 18A Field would also be required, it is stated.

Applicant estimates that the total cost of the proposed facilities will be $9,600,000 which would be financed with funds generated internally, together with borrowings from banks under short-term lines of credit which would be repaid from funds generated internally and from proceeds of long-term debt securities to be issued after the facilities are placed in service.

Finally, Applicant states that it is necessary to ensure that the existing non-jurisdictional gathering and processing facilities belonging to certain Michigan gas distribution companies, or their intrastate suppliers, which would include ANR Intrastate, remain free of Commission jurisdiction. Applicant states that such non-jurisdictional facilities include the intrastate gas gathering and production facilities which are commonly referred to as the "Wet-Header System" and which are located in the northern part of the Lower Peninsula of Michigan. Applicant indicates that these facilities would continue to be used exclusively for the purpose of gathering and processing gas which would be distributed within the State of Michigan.

Accordingly, Applicant requests that, at such time as the Commission issues an order in this proceeding authorizing the proposals described herein, it also determines that the "Wet-Header System" and associated processing facilities remain free from federal jurisdiction. Applicant further requests that the Commission declare that the aforementioned lease would not subject ANR Intrastate to, and ANR Intrastate's production and gathering facilities which would not be leased to Applicant would not be made subject to, the jurisdiction of the Commission under the Natural Gas Act and that no gas reserves subject to contracts between certain Michigan gas distribution companies and their intrastate suppliers including ANR Intrastate would be made subject to the Natural Gas Act nor have their status under the Natural Gas Policy Act of 1978 affected, in any way, by the proposals herein.

Applicant submits that the proposed storage service is and will be required by the present and future public convenience and necessity in that Michigan Wisconsin requires the additional storage capacity to deal with the temporary excess of gas supply presently being experienced by Michigan Wisconsin due to economic recession in its major service areas.

Any person desiring to be heard or to make any protest with reference to said application should on or before February 28, 1983, file with the Federal Energy Regulatory Commission, Washington, D.C. 20426, a motion to intervene or a protest in accordance with the requirements of the Commission's Rules of Practice and Procedure (18 CFR 385.214 or 385.211) and the Regulations under the Natural Gas Act (18 CFR 157.10). All protests filed with the Commission will be considered by it in determining the appropriate action to be taken but will not serve to make the protestants parties to the proceeding. Any person wishing to become a party to a proceeding or to participate as a party in any hearing therein must file a motion to intervene in accordance with the Commission's Rules.

Take further notice that, pursuant to the authority contained in and subject to jurisdiction conferred upon the Federal Energy Regulatory Commission by Sections 7 and 15 of the Natural Gas Act and the Commission's Rules of Practice and Procedure, a hearing will be held without further notice before the Commission or its designee on this application if no motion to intervene is filed within the time required herein, if the Commission on its own review of the matter finds that a grant of the certificate is required by the public convenience and necessity. If a motion for leave to intervene is timely filed, or if the Commission on its own motion believes that a formal hearing is required, further notice of such hearing will be duly given.

Under the procedure herein provided for, unless otherwise advised, it will be unnecessary for Applicant to appear or be represented at the hearing.

**Kenneth F. Plumb,**

*Secretary.*

[FR Doc. 83-3661 Filed 2-9-83; 8:45 am]

BILLING CODE 6717-01-M

---

**[Docket No. ER83-297-000]**

## Arkansas Power & Light Co.; Filing

February 7, 1983.

Take notice that on February 1, 1983, Arkansas Power & Light Company (AP&L) tendered for filing proposed changes in its rates and charges to 3 municipalities and 2 cooperatives in Arkansas, as reflected in proposed Rate Schedule WA83, and to one public utility delivery point and 2 municipal distribution systems in Missouri as reflected in proposed Rate Schedules MU83, C83 and T83. The proposed changes would increase revenues from jurisdictional sales and services to these customers by $9,796,818, based on billing determinants for the 12 month period ending December 31, 1983.

AP&L also submitted as part of the filing a Settlement Agreement with its Arkansas Customers, containing a proposed Settlement Rate Schedule WA83S. AP&L proposes an effective date of April 2, 1983.

AP&L states that the proposed increase rates are necessitated by the fact that it is realizing an unreasonably low rate of return on sales to its affected jurisdictional customers.

Copies of this filing have been served upon AP&L's jurisdictional customers, Arkansas Public Service Commission, the Louisiana Public Service Commission, the Missouri Public Service Commission and the Tennessee Public Service Commission.

Any person desiring to be heard or to protest said filing should file a motion to intervene or protest with the Federal Energy Regulatory Commission, 825 North Capitol Street, NE., Washington, D.C. 20426, in accordance with Rules 211 and 214 of the Commission's Rules of Practice and Procedure (18 CFR 385.211, 385.214). All such motions or protests should be filed on or before February 24,

1983. Protests will be considered by the Commission in determining the appropriate action to be taken, but will not serve to make protestants parties to the proceeding. Any person wishing to become a party must file a motion to intervene. Copies of this filing are on file with the Commission and are available for public inspection.

**Kenneth F. Plumb,**

*Secretary.*

[FR Doc. 83-3662 Filed 2-9-83; 8:45 am]

BILLING CODE 6717-01-M

---

**[Docket No. ER83-298-000]**

## Centel Corp., Western Power Division; Filing

February 7, 1983.

Take notice that on February 1, 1983, Centel Corporation (Centel) Western Power Division, tendered for filing the following proposed rate schedules:

Rate Schedule 83-CWH-2, replacing Rate Schedule 82-CWH2, for service to ten rural electric distribution cooperatives (the RECs);

Rate Schedule 83-MWH-5, replacing Rate Schedule 82-MWh-5, for service to 11 distribution municipalities (the Municipals);

Service Schedule 83-A, replacing Service Schedule 82-A, for firm partial requirements service to Midwest Energy, Inc. (Midwest Energy);

Service Schedule 83-A-1, replacing Service Schedule 82-A-1, for firm partial requirements service to the cities of Anthony, Attica, Beloit, Hoisington, Kingman, Osborne, Pratt, Stockton, Russell, and Washington, Kansas (the Firm Municipals);

Transmission Tariff 83-TSv-1, replacing Transmission Tariff 82-TSv-1, for firm transmission service to Kansas Electric Power Cooperative, Inc. (KEPCo).

Centel states that the proposed rate schedules set forth increased rates designed to produce an increase in revenues from jurisdictional sales and service of $2,343,515 based on the twelve month period ending June 30, 1984, and will increase revenue by 8.95% for service to the RECs, 17.08% for service to the Municipals, 27.24% for service to Midwest Energy, 13.45% for service to the Firm Municipals and 28.05% for service to KEPCo. Centel further states that its proposed increases in rates are due to the increasing cost of providing service, including the addition of new coal-fired generating capacity.

Centel proposes an effective date of April 2, 1983.

Copies of this filing were served upon each of the wholesale customers affected by this filing and the Kansas State Corporation Commission.

Any person desiring to be heard or to protest said filing should file a motion to intervene or protest with the Federal Energy Regulatory Commission, 825 North Capitol Street, NE., Washington, D.C. 20426, in accordance with Rules 211 and 214 of the Commission's Rules of Practice and Procedure (18 CFR 385.211, 385.214). All such motions or protests should be filed on or before February 24, 1983. Protests will be considered by the Commission in determining the appropriate action to be taken, but will not serve to make protestants parties to the proceeding. Any person wishing to become a party must file a motion to intervene. Copies of this filing are on file with the Commission and are available for public inspection.

**Kenneth F. Plumb,**

*Secretary.*

[FR Doc. 83-3663 Filed 2-9-83; 8:45 am]

BILLING CODE 6717-01-M

---

**[Docket No. ER 83-300-000]**

## Connecticut Light & Power Co.; Filing

February 7, 1983.

Take notice that on February 2, 1983, the Connecticut Light and Power Company (CL&P) tendered for filing a proposed rate schedule change with respect to a gas turbine sales agreement dated May 1, 1982 (Amendment) between (1) CL&P, the Hartford Electric Light Company (HELCO), Western Massachusetts Electric Company (WMECO), (together, the NU Companies) and (2) Central Vermont Public Service Company (CVPS).

CL&P states that the Amendment provides for changes to a gas turbine sales agreement between the same parties dated as of August 15, 1977 (the Agreement). The requested changes include (1) extension of the term of the Agreement, (2) modification of the amounts of capacity sold, (3) removal of three gas turbine units from the Agreement, (4) a redetermination of the capacity charges to be paid by CVPS and (5) a redetermination of the transmission charges to be paid by CVPS.

CL&P further states that the capacity charge rate is a monthly rate equal to one-twelfth of the estimated annual costs of each gas turbine generating unit and is determined in accordance with Schedule A of the Amendment. The monthly capacity charge is determined as the product of (i) the appropriate weighted average capacity charge rate ($/kW-month) and (ii) the total kilowatts of capacity which CVPS is entitled to receive in each month pursuant to the Amendment.

CL&P indicates that the transmission charge rate is a monthly rate equal to one-twelfth of the estimated annual average cost of service on the transmission system of the NU Companies. The monthly transmission charge is determined as the product of (i) the appropriate transmission charge rate ($/kW-month), and (ii) the total kilowatts of capacity which CVPS is entitled to receive in each month pursuant to the Amendment.

CL&P requests an effective date of May 1, 1982, and therefore requests waiver of the Commission's notice requirements.

Copies of this filing have been mailed to HELCO, WMECO and CVPS.

Any person desiring to be heard or to protest said filing should file a motion to intervene or protest with the Federal Energy Regulatory Commission, 825 North Capitol Street, NE., Washington, D.C. 20426, in accordance with Rules 211 and 214 of the Commission's Rules of Practice and Procedure (18 CFR 385.211, 385.214). All such motions or protests should be filed on or before February 24, 1983. Protests will be considered by the Commission in determining the appropriate action to be taken, but will not serve to make protestants parties to the proceeding. Any person wishing to become a party must file a motion to intervene. Copies of this filing are on file with the Commission and are available for public inspection.

**Kenneth F. Plumb,**

*Secretary.*

[FR Doc. 83-3664 Filed 2-9-83; 8:45 am]

BILLING CODE 6717-01-M

---

**[Docket No. ER83-293-000]**

## Idaho Power Co.; Filing

February 7, 1983.

Take notice that on January 31, 1983, Idaho Power Company (Idaho) tendered for filing in compliance with the Federal Energy Regulatory Commission's Order of October 7, 1978, a summary of sales made under the Company's 1st Revised Electric Tariff Volume No. 1 along with cost justification for the rate charged. This filing includes the following supplements:

Utah Power & Light Company, Supplement 14

Montana Power Company, Supplement 12

Sierra Pacific Power Company, Supplement 11

Portland General Electric Company, Supplement 4

Puget Sound Power & Light Company, Supplement 11
Southern California Edison Company, Supplement 8
San Diego Gas & Electric Company, Supplement 10
Los Angeles Dept of Water & Power, Supplement 10
City of Burbank, Supplement 10
City of Glendale, Supplement 10
City of Pasadena, Supplement 10

Any person desiring to be heard or to protest said filing should file a motion to intervene or protest with the Federal Energy Regulatory Commission, 825 North Capitol Street, NE., Washington, D.C. 20426, in accordance with Rules 211 and 214 of the Commission's Rules of Practice and Procedure (18 CFR 385.211, 385.214). All such motions or protests should be filed on or before February 23, 1983. Protests will be considered by the Commission in determining the appropriate action to be taken, but will not serve to make protestants parties to the proceeding. Any person wishing to become a party must file a motion to intervene. Copies of this filing are on file with the Commission and are available for public inspection.

**Kenneth F. Plumb,**

*Secretary.*

[FR Doc. 83-3665 Filed 2-9-83; 8:45 am]

BILLING CODE 6717-01-M

---

**[Docket Nos. CP83-146-000; CP80-119-005]**

## Michigan Wisconsin Pipe Line Co. et al.; Application and Petition

February 8, 1983.

Take notice that on January 11, 1983, Michigan Wisconsin Pipe Line Company (Mich Wisc), One Woodward Avenue, Detroit, Michigan 48266, Columbia Gulf Transmission Company (Columbia Gulf), P.O. Box 683, Houston, Texas 77001, and Texas Gas Transmission Corporation (Texas Gas), 3800 Frederica Street, Owensboro, Kentucky 42301, filed in Docket No. CP83-146-000 a joint application pursuant to Section 7 of the Natural Gas Act for a certificate of public convenience and necessity authorizing Mich Wisc to acquire by purchase and operate certain pipeline facilities in Block 250, offshore Louisiana, and for permission and approval of the abandonment of such facilities by Columbia Gulf and Texas Gas. Take notice that on January 11, 1983, Mich Wisc filed in Docket No. CP80-119-005 a petition to amend the order issued June 12, 1980, in Docket No. CP80-119-000 pursuant to Section 7(c) of the Natural Gas Act so as to authorize construction as required following the purchase of facilities from Columbia Gulf and Texas Gas. These proposals are all as more fully set forth in the application and petition to amend which is on file with the Commission and open to public inspection.

Columbia Gulf and Texas Gas propose to abandon by sale to Mich Wisc 1,950 feet of 18-inch pipeline, tie-in line and platform piping, which connect Mich Wisc's 24-inch mainline to Columbia Gulf and Texas Gas's Platform "A" in Block 250. Applicants state that the proposed purchase of facilities by Mich Wisc would eliminate the need for Mich Wisc to install a new four-pile manifold platform authorized by the order of June 12, 1980, issued in Docket No. CP80-119-000. Mich Wisc proposes instead to construct a deck between two existing platforms in Block 250.

Applicants propose the foregoing sale and purchase of facilities pursuant to an agreement dated June 1, 1982. Applicants state that the purchase price would be the depreciated book value of the subject facilities as of January 1, 1983. It is stated that the purchase of facilities and modification of construction authorization in Docket No. CP80-119-000 would improve Mich Wisc's pipeline operations and eliminate unneeded construction.

Any person desiring to be heard or to make any protest with reference to said application and petition should on or before February 28, 1983, file with the Federal Energy Regulatory Commission, Washington, D.C. 20426, a motion to intervene or a protest in accordance with the requirements of the Commission's Rules of Practice and Procedure (18 CFR 385.214 or 385.211) and the Regulations under the Natural Gas Act (18 CFR 157.10). All protests filed with the Commission will be considered by it in determining the appropriate action to be taken but will not serve to make the protestants parties to the proceeding. Any person wishing to become a party to a proceeding or to participate as a party in any hearing therein must file a motion to intervene in accordance with the Commission's Rules.

Take further notice that, pursuant to the authority contained in and subject to the jurisdiction conferred upon the Federal Energy Regulatory Commission by Sections 7 and 15 of the Natural Gas Act and the Commission's Rules of Practice and Procedure, a hearing will be held without further notice before the Commission or its designee on the application if no motion to intervene is filed within the time required herein, if the Commission on its own review of the matter finds that permission and approval for the proposed abandonment are required by the public convenience and necessity. If a motion for leave to intervene is timely filed, or if the Commission on its own motion believes that a formal hearing is required, further notice of such hearing will be duly given.

Under the procedure herein provided for, unless otherwise advised, it will be unnecessary for Applicants to appear or be represented at the hearing.

**Kenneth F. Plumb,**

*Secretary.*

[FR Doc. 83-3666 Filed 2-9-83; 8:45 am]

BILLING CODE 6717-01-M

---

**[Docket No. CP83-163-000]**

## Montana-Dakota Utilities Co.; Application

February 8, 1983.

Take notice that on January 19, 1983, Montana-Dakota Utilities Co. (Applicant), 400 North Fourth Street, Bismarck, North Dakota 58501, filed in Docket No. CP83-163-000 an application pursuant to Section 7(c) of the Natural Gas Act for a certificate of public convenience and necessity authorizing the sale of natural gas to Frannie-Deaver Utilities (Frannie) for resale and the construction and operation of facilities necessary therefor, all as more fully set forth in the application which is on file with the Commission and open to public inspection.

Applicant proposes to sell natural gas to Frannie, a natural gas distribution company, for resale. It is stated that service to Frannie would be under Applicant's FERC Gas Tariff, Original Volume No. 4. Applicant further states that the point of delivery of gas to Frannie would be at Applicant's existing Southeast Polecat Compressor Station, Park County, Wyoming, by means of proposed positive meter and regulator setting to be located in an existing meter building. It is stated that the estimated total cost of construction for the facility is $4,461, which cost would be financed by means of a combination of internally generated funds and external financing.

The proposed service, it is stated, would be primarily peak day so that Frannie would be able to serve its residential and small commercial customers in and around the towns of Frannie and Deaver, Wyoming, and various oil fields, ranches and houses in the same areas.

Any person desiring to be heard or to make any protest with reference to said application should on or before February 28, 1983, file with the Federal Energy Regulatory Commission,

Washington, D.C. 20426, a motion to intervene or a protest in accordance with the requirements of the Commission's Rules of Practice and Procedure (18 CFR 385.214 or 385.211) and the Regulations under the Natural Gas Act (18 CFR 157.10). All protests filed with the Commission will be considered by it in determining the appropriate action to be taken but will not serve to make the protestants parties to the proceeding. Any person wishing to become a party to a proceeding or to participate as a party in any hearing therein must file a motion to intervene in accordance with the Commission's Rules.

Take further notice that, pursuant to the authority contained in and subject to jurisdiction conferred upon the Federal Energy Regulatory Commission by Sections 7 and 15 of the Natural Gas Act and the Commission's Rules of Practice and Procedure, a hearing will be held without further notice before the Commisson or its designee on this application if no motion to intervene is filed within the time required herein, if the Commission on its own review of the matter finds that a grant of the certificate is required by the public convenience and necessity. If a motion for leave to intervene is timely filed, or if the Commission on its own motion believes that a formal hearing is required, further notice of such hearing will be duly given.

Under the procedure herein provided for, unless otherwise advised, it will be unnecessary for Applicant to appear or be represented at the hearing.

**Kenneth F. Plumb,**

*Secretary.*

[FR Doc. 83-3667 Filed 2-9-83; 8:45 am]

BILLING CODE 6717-01-M

---

**[Docket No. CP83-145-000]**

## Natural Gas Pipeline Co. of America; Request Under Blanket Authorization

February 8, 1983.

Take notice that on January 11, 1983, Natural Gas Pipeline Company of America (Natural), 122 South Michigan Avenue, Chicago, Illinois 60603, filed in Docket No. CP83-145-000 a request pursuant to § 157.205 of the Regulations under the Natural Gas Act (18 CFR 157.205) that Natural proposes to increase natural gas deliveries to Iowa-Illinois Gas and Electric Company (Iowa-Illinois) at a particular delivery point and to construct and operate appurtenant facilities necessary therefor under the authorization issued in Docket No. CP82-402-000, pursuant to Section 7 of the Natural Gas Act, all as more fully set forth in the request on file with the Commission and open to public inspection.

Natural proposes to make certain minor adjustments at the Muscatine/West Liberty delivery point, Muscatine County, Iowa, to effectuate a requested increase in the volumes of gas delivered to Iowa-Illinois at that point. This increase in peak flow deliverability from 4,133 Mcf per day to 9,970 Mcf per day would have no effect on Iowa-Illinois' total entitlements or contract quantity, it is explained. It is stated that the increased deliverability at Muscatine/West Liberty would enable Iowa-Illinois to serve increased gas volume requirements by North Star Steel Company which would use the gas for process purposes. Natural estimates the cost of the facility changes to be $41,000 which would be financed from funds on hand.

Natural states that the proposed action is not prohibited by its existing tariff and that it has sufficient capacity to accomplish the proposed change in deliveries to Iowa-Illinois without detriment or disadvantage to its other customers. Natural states that the proposed increased delivery of the Muscatine/West Liberty delivery point would effectively have no impact on Natural's system wide peak day and annual deliveries.

Any person or the Commission's staff may file, within 45 days after issuance of the instant notice by the Commission, pursuant to Rule 214 of the Commission's Procedural Rules (18 CFR 385.214), a motion to intervene or notice of intervention and, pursuant to § 157.205 of the Regulations under the Natural Gas Act (18 CFR 157.205), a protest to the request. If no protest is filed within the time allowed therefor, the proposed activity shall be deemed to be authorized effective the day after the time allowed for filing a protest. If a protest is filed and not withdrawn within 30 days after the time allowed for filing a protest, the instant request shall be treated as an application for authorization pursuant to Section 7 of the Natural Gas Act.

**Kenneth F. Plumb,**

*Secretary.*

[FR Doc. 83-3668 Filed 2-9-83; 8:45 am]

BILLING CODE 6717-01-M

---

**[Docket No. ER83-299-000]**

## Public Service Co. of New Mexico; Filing

February 7, 1983.

Take notice that Public Service Company of New Mexico (PNM) tendered for filing on Feburary 1, 1983 proposed changes in rates to five wholesale customers, namely Department of Energy—Los Alamos (DOE), the City of Farmington, New Mexico (Farmington), Plains Electric Generation and Transmission Cooperative, Inc. (Plains) Texas-New Mexico Power company (TNP), and to the City of Gallup, New Mexico (Gallup). The proposed changes would increase revenues from the sales and services to wholesale customers other than Gallup by $10,435,000 and would increase revenues from the sales and services to PNM's wholesale customer Gallup by $1,353,000.

PNM proposes an effective date of April 2, 1983.

Copies of the filing were served upon the public utility's jurisdictional customers being served under these rate schedules and the New Mexico Public Service Commission.

Any person desiring to be heard or to protest said filing should file a motion to intervene or protest with the Federal Energy Regulatory Commission, 825 North Capitol Street, NE., Washington, D.C. 20426, in accordance with Rules 211 and 214 of the Commission's Rules of Practice and Procedure (18 CFR 385.211, 385.214). All such motions or protests should be filed on or before February 24, 1983. Protests will be considered by the Commission in determining the appropriate action to be taken, but will not serve to make protestants parties to the proceeding. Any person wishing to become a party must file a motion to intervene. Copies of this filing are on file with the Commission and are available for public inspection.

**Kenneth F. Plumb,**

*Secetary.*

[FR Doc. 83-3670 Filed 2-9-83; 8:45 am]

BILLING CODE 6717-01-M

---

**[Docket No. ER83-294-000]**

## Southern California Edison Co.; Filing

February 7, 1983.

Take notice that on January 31, 1983, Southern California Edison Company (SCE) tendered for filing a change of rates for network transmission service as embodied in SCE FPC Electric Tariff Original Volume No. 1, Contract Rate TN.

SCE proposes an effective date of April 1, 1983.

Copies of this filing were served upon the Public Utilities Commission of the State of California, the California cities of Anaheim, Azusa, Banning, Colton, Riverside, and Vernon, and the Southern California Water Company.

Any person desiring to be heard or to protest said filing should file a motion to intervene or protest with the Federal Energy Regulatory Commission, 825 North Capitol Street, N.E., Washington, D.C. 20426, in accordance with Rules 211 and 214 of the Commission's Rules of Practice and Procedure (18 CFR 385.211, 385.214). All such motions or protests should be filed on or before February 24, 1983. Protests will be considered by the Commission in determining the appropriate action to be taken, but will not serve to make protestants parties to the proceeding. Any person wishing to become a party must file a motion to intervene. Copies of this filing are on file with the Commission and are available for public inspection.

**Kenneth F. Plumb,**

*Secretary.*

[FR Doc. 83-3671 Filed 2-9-83; 8:45 am]

BILLING CODE 6717-01-M

---

**[Docket No. ER83-295-000]**

## Southern California Edison Co.; Filing

February 7, 1983.

Take notice that on January 31, 1983, Southern California Edison Company (SCE) tendered for filing a change of rates for Off-Peak Energy sold by SCE to State of California, Department of Water Resources under the terms and conditions of the "Contract Between State of California and California Companies for the Sale, Interchange and Extra High Voltage Transmission of Electric Capacity and Energy" (EHV Contract), SCE Rate Schedule FPC No. 38.

SCE proposes an effective date of April 1, 1983.

Copies of this filing were served upon the Department of Water Resources and the Public Utilities Commission of the State of California.

Any person desiring to be heard or to protest said filing should file a motion to intervene or protest with the Federal Energy Regulatory Commission, 825 North Capitol Street, NE., Washington, D.C. 20426, in accordance with the Rules of Practice and Procedure (18 CFR 385.211, 385.214). All such motions or protests should be filed on or before February 24, 1983. Protests will be considered by the Commission in determining the appropriate action to be taken, but will not serve to make protestants parties to the proceeding. Any person wishing to become a party must file a motion to intervene. Copies of this filing are on file with the Commission and are available for public inspection.

**Kenneth F. Plumb,**

*Secretary.*

[FR Doc. 83-3672 Filed 2-9-83; 8:45 am]

BILLING CODE 6717-01-M

---

**[Docket No. ER83-296-000]**

## Southern California Edison Co.; Filing

February 7, 1983.

Take notice that on January 31, 1983, Southern California Edison Company (SCE) tendered for filing a notice of determination of initial rates for interruptible and firm transmission service, scheduling and dispatching and transmission loss accounting charges under the terms and conditions of the Edison-CDWR Power Contract between SCE and State of California Department of Water Resources (Rate Schedule FERC No. 112).

SCE proposes an effective date of April 1, 1983.

Copies of this filing were served upon the Public Utilities Commission of the State of California and the State of California Department of Water Resources.

Any person desiring to be heard or to protest said filing should file a motion to intervene or protest with the Federal Energy Regulatory Commission, 825 North Capitol Street, NE., Washington, D.C. 20426, in accordance with Rules 211 and 214 of the Commission's Rules of Practice and Procedure (18 CFR 385.211, 385.214). All such motions or protests should be filed on or before February 24, 1983. Protests will be considered by the Commission in determining the appropriate action to be taken, but will not serve to make protestants parties to the proceeding. Any person wishing to become a party must file a motion to intervene. Copies of this filing are on file with the Commission and are available for public inspection.

**Kenneth F. Plumb,**

*Secretary.*

[FR Doc. 83-3673 Filed 2-9-83; 8:45 am]

BILLING CODE 6717-01-M

---

**[Docket No. GP83-11-000]**

## Sun Exploration & Production Co.; Petition for Declaratory Order

February 8, 1983.

On January 25, 1983, Sun Exploration and Production Company (Petitioner), P.O. Box 20, Dallas, Texas 75221 filed a petition pursuant to section 385.207 of the Federal Energy Regulatory Commission's Rules of Practice and Procedure, and the Administrative Procedure Act, 5 U.S.C. 554(e). Petitioner requests an order of the Commission declaring that the Texas ad valorem tax is a "state severance tax" as described in section 110(c) of the Natural Gas Policy Act (15 U.S.C. 3301-3432 (Supp. V 1982)) (NGPA). More specifically, the Petitioner requests an order declaring that the Texas ad valorem tax when assessed on a mineral estate is a state severance tax in accordance with section 110(c) of the NGPA, and section 271.1101(a)(1) of the Commission's regulations which when borne by the seller may be added to the first sale price without exceeding the maximum lawful price under Title I of the NGPA.

Any person desiring to be heard or to protest Sun's request for a declaratory order should file within 30 days after publication of this notice in the **Federal Register**, with the Federal Energy Regulatory Commission, 825 North Capitol Street, NE., Washington, D.C. 20426, a protest or petition to intervene in accordance with the requirements of the Commission's rules of Practice and Procedure (18 CFR 385.211 or 385.214). All protests filed with the Commission will be considered but will not make the protestants parties to the proceeding. Any party wishing to become a party to the proceeding or to participate as a party in any hearing must file a petition to intervene in accordance with the Commission's Rules.

**Kenneth F. Plumb,**

*Secretary.*

[FR Doc. 83-3674 Filed 2-9-83; 8:45 am]

BILLING CODE 6717-01-M

---

**[Docket No. CP83-156-000]**

## Transcontinental Gas Pipe Line Corp., et al.; Application

February 8, 1983.

Take notice that on January 17, 1983, Transcontinental Gas Pipe Line Corporation (Transco), P.O. Box 1396, Houston, Texas 77251, and Columbia Gulf Transmission Company (Columbia Gulf), P.O. Box 683, Houston, Texas 77001, filed in Docket No. CP83-156-000 a joint application pursuant to Section 7(c) of the Natural Gas Act for a certificate of public convenience and necessity authorizing the construction and operation of certain pipeline and appurtenant facilities in the offshore Texas area, all as more fully set forth in the application which is on file with the Commission and open to public inspection.

Applicants state that they have contracted with Shell Offshore Inc. (Shell Offshore) to purchase 100 percent of the gas reserves underlying Brazos

Area, Block A-23, offshore Texas. To connect these reserves, Applicants propose to construct and operate in the Brazos Area, approximately 8.14 miles of 12-inch pipeline extending from a production platform A in Brazos Block A-23 to existing jointly-owned facilities of Applicants in Brazos Block A-20 which existing facilities are in-turn connected to Transco's Central Texas Gathering System. Applicants also propose to construct and operate within Brazos Block A-23, 0.98 mile of 8-inch pipeline and 0.96 mile of 6-inch pipeline connecting the JA and JB platforms, respectively, to the aforementioned 12-inch pipeline through underwater connections. It is indicated that the subject gas would be transported onshore via Transco's Central Texas Gathering System.

It is stated that the proposed facilities would be owned 50 percent by Transco and 50 percent by Columbia Gulf. Transco would construct such facilities beginning in 1983 and would operate them on behalf of Applicants, it is explained. Applicants aver that the proposed 12-inch pipeline would be designed to provide a daily capacity of up to 190,000 Mcf while the proposed 8-inch and 6-inch pipeline spurs would be designed with capacities of 60,000 Mcf per day and 40,000 Mcf per day, respectively.

Applicants estimate that the proposed facilities would cost $14,945,000. Applicants state that the proposed facilities would be financed initially through revolving credit arrangements, short-term loans or funds on hand, with permanent financing to be undertaken as part of Applicants' respective overall long-term financing program at later dates.

Any person desiring to be heard or to make any protest with reference to said application should on or before February 28, 1983, file with the Federal Energy Regulatory Commission, Washington, D.C. 20426, a motion to intervene or a protest in accordance with the requirements of the Commission's Rules of Practice and Procedure (18 CFR 385.214 or 385.211) and the Regulations under the Natural Gas Act (18 CFR 157.10). All protests filed with the Commission will be considered by it in determining the appropriate action to be taken but will not serve to make the protestants parties to the proceeding. Any person wishing to become a party to a proceeding or to participate as a party in any hearing therein must file a motion to intervene in accordance with the Commission's Rules.

Take further notice that, pursuant to the authority contained in and subject to jurisdiction conferred upon the Federal Energy Regulatory Commission by Sections 7 and 15 of the Natural Gas Act and the Commission's Rules of Practice and Procedure, a hearing will be held without further notice before the Commission or its designee on this application if no motion to intervene is filed within the time required herein, if the Commission on its own review of the matter finds that a grant of the certificate is required by the public convenience and necessity. If a motion for leave to intervene is timely filed, or if the Commission on its own motion believes that a formal hearing is required, further notice of such hearing will be duly given.

Under the procedure herein provided for, unless otherwise advised, it will be unnecessary for Applicants to appear or be represented at the hearing.

**Kenneth F. Plumb,**

*Secretary.*

[FR Doc. 83-3675 Filed 2-9-83; 8:45 am]

BILLING CODE 6717-01-M

---

**[Docket No. QF83-103-000]**

## Pacific Cogeneration Co.; Application for Commission Certification of Qualifying Status of a Cogeneration Facility

February 8, 1983.

On December 21, 1982, Pacific Cogeneration Co., of P.O. Box 1529, Vancouver, Washington 98668, filed with the Federal Energy Regulatory Commission (Commission) an application for certification of a facility as a qualifying Cogeneration facility pursuant to § 292.207 of the Commission's rules.

The topping-cycle cogeneration facility will consist of a combustion gas turbine and a waste heat recovery boiler supplying steam to a barley processing plant. The facility will be located in Vancouver, Washington. The primary energy source to the facility will be natural gas. The electric power production capacity of the facility will be 20.1 megawatts. Installation of the facility began in May of 1981. Applicant states no electric utility, electric utility holding company or any combination thereof has any ownership interest in the facility.

Any person desiring to be heard or objecting to the granting of qualifying status should file a petition to intervene or protest with the Federal Energy Regulatory Commission, 825 North Capitol Street, NE., Washington, D.C. 20426, in accordance with rules 211 and 214 of the Commission's Rules of Practice and Procedure. All such petitions or protests must be filed within 30 days after the date of publication of this notice and must be served on the applicant. Protests will be considered by the Commission in determining the appropriate action to be taken but will not serve to make protestants parties to the proceeding. Any person wishing to become a party must file a petition to intervene. Copies of this filing are on file with the Commission and are available for public inspection.

**Kenneth F. Plumb,**

*Secretary.*

[FR Doc. 83-3669 Filed 2-9-83; 8:45 am]

BILLING CODE 6717-01-M

---

**[P-4044-002, et al.]**

## Minnesota Department of Natural Resources, et al.; Applications Filed With the Commission

Take notice that the following hydroelectric applications have been filed with the Federal Energy Regulatory Commission and are available for public inspection:

1a. *Type of Application:* Exemption of Small Hydroelectric Power Project.

b. *Project No.:* 4044-002.

c. *Date Filed:* December 23, 1982.

d. *Applicant:* Minnesota Department of Natural Resources.

e. *Name of Project:* Kettle River Dam.

f. *Location:* Pine County, Minnesota.

g. *Filed Pursuant to:* 18 CFR Part 4 Subpart K (1980).

h. *Contact Person:* Mr. Joseph N. Alexander, Commissioner, Department of Natural Resources, 3rd Floor, Centennial Office Building, 658 Cedar Street, St. Paul, Minnesota 55155.

i. *Comment Date:* March 11, 1983.

j. *Description of Project:* The proposed project would consist of; (1) a proposed reservoir with a storage capacity of 380 acre-feet and a surface area of 46 acres at normal pool elevation of 964.5 feet m.s.l.; (2) an existing powerhouse which would contain two generating units rated at 138 kW and 725 kW, respectively, for a total installed capacity of 863 kW; (3) an existing dam whose components consist of an earth embankment; a masonry spillway; a timber crib spillway; and the concrete and masonry powerhouse acting as part of the dam; (4) existing 69 kV and 46 kV transmission lines; and (5) appurtenant facilities. The estimated average annual energy output of the proposed project would be 4,140,000 kWh.

k. *Purpose of Project:* The Minnesota Department of Natural Resources plans to develop and sell hydropower to generate taxes, create jobs, and

maintain the aesthetic values of the project.

l. This notice also consists of the following standard paragraph: A1, B, C, and D3a.

2a. *Type of Application:* License (5MW or Less).

b. *Project No.:* 5227–001.

c. *Date Filed:* December 6, 1982.

d. *Applicant:* Robert Raymond Tift.

e. *Name of Project:* Horse Creek.

f. *Location:* Located on Horse Creek, near Horse Creek, in Siskiyou County, California, within Klamath National Forest.

g. *Filed Pursuant to:* Federal Power Act, 16 U.S.C. 791(a)–825(r).

h. *Contact Person:* Robert Raymond Tift, P.O. Box 388, Horse Creek, California 96045.

i. *Comment Date:* March 10, 1983.

j. *Description of Project:* The proposed run-of-river project would consist of: (1) a 4-foot-high concrete diversion dam supported by natural boulders, with a 55-foot-long spillway and a steel denil fishway; (2) a concrete intake structure; (3) a 6,600-foot-long, 48-inch diameter steel penstock; (4) a concrete powerhouse with 8 generating units, each rated at 150 kW at a head of 160 feet; (5) a 2.5-mile-long transmission line utilizing existing right-of-way; and appurtenant facilities. The average annual energy generation is estimated to be 5.5 million kWh.

k. *Purpose of Project:* The energy generated by the project would be sold to the Pacific Power and Light Company.

l. This notice also consists of the following standard paragraphs: A2, B, C, D1.

3a. *Type of Application:* Revised Application for Exemption from Licensing (5MW or less).

b. *Project No.:* 6293–001.

c. *Date Filed:* October 25, 1982.

d. *Applicant:* Horseshoe Bar Hydro Associates.

e. *Name of Project:* Horseshoe Bar Hydroelectric.

f. *Location:* On the Middle Fork of the American River in Placer County, California.

g. *Filed Pursuant to:* Section 408 of the Energy Security Act of 1980 (16 U.S.C. 2705 and 2708 as amended).

h. *Contact Person:* David C. Auslam, Jr., Auslam & Associates, Inc., 3327 Longview Drive, Suite 250, North Highlands, California 95660.

i. *Comment Date:* March 11, 1983.

j. *Description of Project:* The proposed project would consist of: (1) a 6-foot-high overflow spillway structure with crest at elevation 1045 feet; (2) a powerhouse containing a turbine-generating unit rated at 4.0 MW with an average annual energy output of 16.0 GWh; (3) a switchyard adjacent to the powerhouse; and (4) a 1500-foot-long transmission line. The revisions would place the powerhouse at the upstream end of the existing 193-foot-long tunnel, rather than at the downstream end as proposed in the initial application.

k. This notice also consists of the following standard paragraphs: A3, B, C.

l. *Agency Comments:* The U.S. Fish and Wildlife Service, The National Marine Fisheries Service, and the State Fish and Game agency(ies) are requested, for the purposes set forth in Section 408 of the Act, to file within 30 days from the date of issuance of this notice appropriate terms and conditions to protect any fish and wildlife resources or to otherwise carry out the provisions of the Fish and Wildlife Coordination Act. General comments concerning the project and its resources are requested; however, specific terms and conditions to be included as a condition of exemption must be clearly identified in the agency letter. If an agency does not file terms and conditions within this time period, that agency will be presumed to have none. Other Federal, State, and local agencies are requested to provide any comments they may have in accordance with their duties and responsibilities. No other formal requests for comments will be made. Comments should be confined to substantive issues relevant to the granting of an exemption. If an agency does not file comments within 30 days from the date of issuance of this notice, it will be presumed to have no comments. One copy of an agency's comments must also be sent to the Applicant's representatives.

4a. *Type of Application:* License under 5MW.

b. *Project No.:* 6418–000.

c. *Date Filed:* June 7, 1982, and revised on November 30, 1982.

d. *Applicant:* Judith A. Burford.

e. *Name of Project:* A.J. Allen Power Plant.

f. *Location:* East Brush Creek, tributary to Eagle River, in Eagle County, Colorado.

g. *Filed Pursuant to:* Federal Power Act, 16 U.S.C. 791(a)–825(r).

h. *Contact Person:* Mr. Robert L. Johnson, P.O. Box 361, Eagle, Colorado 81631.

i. *Comment Date:* April 4, 1983.

j. *Description of Project:* The run-of-the-creek project consists of: (1) a wooden collection box intake at approximate elevation 9,551 feet m.s.l.; (2) a 12-inch diameter 30-foot long intake conduit along the right (east) bank; (3) a sluice box/silt trap overflow-type structure; (4) an 8-inch diameter 970-foot long steel pipeline; (5) a powerhouse containing a Pelton Impulse Turbine connected to a generator having a rated capacity of 11kW and connected to an alternator having a rated capacity of 6 kW operated under a 155-foot head and at a flow of 1.2 cfs; (6) a short tailrace; (7) a 112-foot long transmission line; and (8) appurtenant facilities.

k. *Purpose of Project:* Project energy is used by Applicant to serve its mountain summer cabin. Applicant estimates the annual generation averages about 14,700 kWh.

l. This notice also consists of the following standard paragraphs: A2, B, C and D1.

5a. *Type of Application:* Preliminary Permit.

b. *Project No.:* 6708–000.

c. *Date Filed:* November 8, 1982.

d. *Applicant:* North Fork Power Company.

e. *Name of Project:* North Fork Project.

f. *Location:* Valley County, Idaho; North Fork Payette River.

g. *Filed Pursuant to:* Federal Power Act, 16 U.S.C. 791(a)–825(r).

h. *Contact Person:* Mr. Harry S. D. Adams, Manager, Hydro Resources, P.O. Box 50, Boise, Idaho 83728.

i. *Comment Date:* April 4, 1983.

j. *Description of Project:* The proposed project would consist of: (1) a 70-foot-high, 500-foot-long earthen dam with a concrete spillway; (2) a reservoir with a surface area of 309 acres and storage capacity of 10,800 acre-feet; (3) a 10-foot-diameter, 1,000-foot-long penstock; (4) a powerhouse with a total installed capacity of 13 MW; (5) a 200-foot-long tailrace; and (6) a 2.5-mile-long, 69-kV transmission line connecting with an existing 69-kV transmission line owned by Idaho Power Company.

The Applicant is seeking issuance of a preliminary permit for a period of 36 months during which it would conduct engineering, economic and environmental studies and prepare an FERC license application. No new roads would be constructed and the areas disturbed by test borings would be restored to original contours. The project would be partially located on the U.S. lands administered by the U.S. Bureau of Land Management. The cost of conducting the studies is estimated by the Applicant to be $200,000.

k. *Purpose of Project:* The Applicant estimates that annual energy output would be 60 million kWh which would be sold to the Idaho Power Company.

l. This notice also consists of the following standard paragraphs: A4b, A4c, A4d, B, C, and D2.

6a. *Type of Application:* Exemption (5 MW or Less).

b. *Project No.:* 6788–000.

c. *Date Filed:* October 21, 1982.

d. *Applicant:* Dan D. Hudson.

e. *Name of Project:* Deep Creek Hydroelectric Project.

f. *Location:* On Deep Creek, near Buhl, in Twin Falls County, Idaho.

g. *Filed Pursuant to:* Section 408 of the Energy Security Act of 1980, 16 U.S.C. 2705, and 2708 as amended.

h. *Contact Person:* Mr. Dan D. Hudson, Route 3, Box 479, Buhl, Idaho 83316.

i. *Comment Date:* March 10, 1983.

j. *Description of Project:* The proposed project would consist of: (1) a 3-foot-high, 40-foot-long concrete diversion structure; (2) a 1,600-foot-long concrete canal; (3) a 50-foot-long, 60-inch-diameter steel penstock; (4) a powerhouse containing three generating untis with a total rated capacity of 280 kW; and (5) a 0.25-mile-long, 12-kV transmission line. The Applicant estimates that average annual energy production would be 1.115 million kWh.

k. *Purpose of Project:* Project power would be sold to Idaho Power Company.

l. This notice also consists of the following standard paragraphs: A1, B, C and D3a.

7a. *Type of Application:* Preliminary Permit.

b. *Project No.:* P–6796–000.

c. *Date Filed:* October 25, 1982.

d. *Applicant:* Great Northern Hydro Corporation.

e. *Name of Project:* St. Regis Hydro Station.

f. *Location:* St. Regis River, Franklin County, Town of Waverly, New York.

g. *Filed Pursuant to:* Federal Power Act, 16 U.S.C. 791(a)–825(r).

h. *Contact Person:* Mr. Paul G. Carr, 159 Park St., Gouverneur, New York 13462.

i. *Comment Date:* April 4, 1983.

j. *Description of Project:* The proposed project would consist of: (1) rehabilitation of an existing timber crib dam, 8.0 feet high and 100 feet long; (2) an existing reservoir with a surface area of approximately 29 acres, a normal reservoir elevation of 1235 feet m.s.l., and maximum storage capacity of 235 acre-feet; (3) a proposed powerhouse containing a single generation unit with an estimated installed capacity of 205 kW; (4) a proposed 4.2-kV transmission line 250 feet long; and (5) appurtenant facilities. The Applicant estimates that the average annual energy output would be 1,621 MWh. The dam is owned by the Town of Waverly, New York.

k. *Purpose of Project:* Project power will be sold to the Niagara Mohawk Power Corporation.

l. This notice also consists of the following standard paragraphs: A4a, B, C, and D2.

m. *Proposed Scope of Studies under Permit:* A preliminary permit, if issued, does not authorize construction. The Applicant seeks issuance of a preliminary permit for a period of 18 months, during which time studies would be made to determine the engineering, environmental, and economic feasibility of the project. In addition, historic and recreational aspects of the project would be determined, along with consultation with Federal, state, and local agencies for information, comments and recommendations relevant to the project. The Applicant estimates that the cost of the studies would be $32,000.

8a. *Type of Application:* Preliminary Permit.

b. *Project No.:* P–6797–000.

c. *Date Filed:* October 25, 1982.

d. *Applicant:* Madrid Hydro Station.

f. *Location:* Grass River, St. Lawrence County, Town of Madrid, New York.

g. *Filed Pursuant to:* Federal Power Act, 16 U.S.C. 791(a)–825(r).

h. *Contact Person:* Mr. Paul G. Carr, 159 Park St., Gouverneur, New York 13462.

i. *Comment Date:* April 1, 1983.

j. *Description of Project:* The proposed project would consist of: (1) rehabilitation of an existing concrete and stone masonry dam, 9.0 feet high and 745 feet long; (2) an existing reservoir with a surface area of approximately 102 acres, a normal reservoir elevation of 255 feet m.s.l., and a maximum storage capacity of 886 acre-feet; (3) a proposed powerhouse containing a single generating unit with an estimated installed capacity of 220 kW; (4) a proposed 4.2kV transmission line, 200 feet long; and (5) appurtenant facilities. The Applicant estimates that the average annual energy output would be 1,836 MWh. The dam is owned by the Town of Madrid, New York.

k. *Purpose of Project:* Project power will be sold to the Niagara Mohawk Power Corporation.

l. This notice also consists of the following standard paragraphs: A4a, B, C, D2.

m. *Proposed Scope of Studies under Permit:* A preliminary permit, if issued, does not authorize construction. The Applicant seeks issuance of a preliminary permit for a period of 18 months, during which time studies would be made to determine the engineering, environmental, and economic feasibility of the project. In addition, historic and recreational aspects of the project would be determined, along with consultation with Federal, state, and local agencies for information, comments and recommendations relevant to the project. The Applicant estimates that the cost of the studies would be $32,000.

9a. *Type of Application:* Preliminary Permit.

b. *Project No.:* 6907–000.

c. *Date Filed:* December 6, 1982.

d. *Applicant:* Georgia Hydro Associates.

e. *Name of Project:* High Falls Hydropower Project.

f. *Location:* Monroe County, Georgia.

g. *Filed Pursuant to:* Federal Power Act, 16 U.S.C. 791(a)–825(r).

h. *Contact Person:* Mr. Wayne L. Rogers, President, Synergic, Inc., 1444 Foxwood Court, Annapolis, Maryland 21401.

i. *Comment Date:* April 1, 1983.

j. *Description of Project:* The proposed project will consist of: (1) an existing reservoir with a storage capacity of 8,600 acre-feet and a surface area of 740 acres at power pool elevation of 587 feet m.s.l.; (2) an existing concrete and masonry dam that is 606 feet long and 35 feet high; (3) an existing powerhouse which would contain one generating unit rated at 2,000 kW; (4) proposed transmission lines; and (5) appurtenant facilities. The estimated average energy output would be 8 GWh.

k. *Purpose of Project:* Georgia Hydro Associates proposes to sell the generated power to the Georgia Power Company.

l. This notice also consists of the following standard paragraphs: A4a, A4c, B, C, and D2.

10a. *Type of Application:* Preliminary Permit.

b. *Project No.:* 6909–000.

c. *Date Filed:* December 6, 1982.

d. *Applicant:* Mineop Corporation.

e. *Name of Project:* East Carson River.

f. *Location:* Near Gardenville in Douglas County, Nevada on East Fork Carson River.

g. *Filed Pursuant to:* Federal Power Act, 16 U.S.C. 791(a)–825(r).

h. *Contact Person:* Dr. Ronald F. Ott, President, Ott Water Engineers, Inc., 2334 Washington Avenue, Redding, California 96001.

i. *Comment Date:* February 25, 1983.

j. *Competing Application:* Project No. 6133 Date Filed: August 11, 1982, date of issuance of notice of initial application is August 27, 1982.

k. *Description of Project:* The proposed project would consist of: (1) an existing 25-foot-high dam owned by the Applicant; (2) two penstocks, each 100 feet long and 72 inches in diameter; (3) a

powerhouse with a total installed capacity of 700 kW; and (4) a 12.5-kV, 0.5-mile-long transmission line connecting with the existing Sierra-Pacific Power Company line.

The Applicant is seeking issuance of a preliminary permit for a period of 18 months during which it would conduct engineering, economic and environmental studies and prepare an FERC license application. No new roads would be required for conducting these studies which are estimated by the Applicant to cost $50,000.

l. *Purpose of Project:* The estimated 4.3 million kWh of energy generated annually by the proposed project would be sold to the Sierra-Pacific Power Company.

m. This notice also consists of the following standard paragraphs: A3, B, C and D2.

11a. *Type of Application:* Preliminary Permit.

b. *Project No.:* 6926–000.

c. *Date Filed:* December 13, 1982.

d. *Applicant:* Family Power Partners.

e. *Name of Project:* Little Falls.

f. *Location:* Willow River in St. Croix County, Wisconsin.

g. *Filed Pursuant to:* Federal Power Act, 16 U.S.C. 791(a)–825(r).

h. *Contact Person:* Mr. Douglas A. Spaulding, INDECO, Inc., 1500 S. Lilac Drive, 351 Tyrol West Building, Minneapolis, Minnesota 55416.

i. *Comment Date:* April 4, 1983.

j. *Description of Project:* The proposed project will consist of: (1) an existing reinforced concrete dam having a height of approximately 30 feet and a length of 310 feet; (2) an existing reservoir with a surface area of 185 acres and a normal storage capacity of 1,342 acre-feet at normal pool elevation of 741 feet m.s.l.; (3) an existing powerhouse with a proposed installed generating capacity of 600 kW; (4) a proposed 1.5-mile-long, 12.5 kV transmission line; and (5) appurtenant facilities. The Applicant estimates that the average annual energy generation will be 2.7 GWh.

k. *Purpose of Project:* The Applicant anticipates marketing the power generated by this project to Northern States Power Company.

l. This notice also consists of the following standard paragraphs: A4a, A4c, B, C and D2.

12a. *Type of Application:* Preliminary Permit.

b. *Project No:* 6937–000.

c. *Date Filed:* December 13, 1982.

d. *Applicant:* Family Power Partners.

e. *Name of Project:* Mound Plant Dam.

f. *Location:* Willow River in St. Croix County, Wisconsin.

g. *Filed Pursuant to:* Federal Power Act 16 U.S.C. 791(a)–825(r).

h. *Contact Person:* Mr. Douglas A. Spaulding, INDECO, Inc., 1500 S. Lilac Drive, 351 Tyrol West Building, Minneapolis, Minnesota 55416.

i. *Comment Date:* April 4, 1983.

j. *Description of Project:* The proposed project will consist of: (1) an existing reinforced concrete and earth fill dam having an approximate height of 49 feet and an approximate length of 430 feet; (2) an existing reservoir with a surface area of 57 acres and a storage capacity of 594 acre-feet at normal pond elevation of 893 feet m.s.l.; (3) an existing powerhouse with a proposed installed generating capacity of 400 kW; and (4) appurtenant facilities. The Applicant estimates that the average annual energy generation will be 1.6 GWh.

k. *Purpose of Project:* The Applicant anticipates marketing the power generated by this project to Northern States Power Company.

l. This notice also consists of the following standard paragraphs: A4a, A4c, B, C and D2.

13a. *Type of Application:* Preliminary Permit.

b. *Project No:* 6947–000.

c. *Date Filed:* December 20, 1982.

d. *Applicant:* F and T Services Corporation.

e. *Name of Project:* Claiborne.

f. *Location:* Lake Claiborne, Bayou D'Arbonne, Claiborne Parish, Louisiana.

g. *Filed Pursuant to:* Federal Power Act 16 U.S.C. 791(a)–825(r).

h. *Contact Person:* Mr. Ralph L. Laukhuff, P.O. Box 64844, 9107 Interline Avenue, Baton Rouge, Louisiana 70896.

i. *Comment:* April 4, 1983.

j. *Description of Project:* The proposed project consists of: (1) an existing 5,500-foot long, 118-foot high (maximum) earthen dam with a concrete overflow weir which discharges into three concrete conduits under the dam; (2) an existing 10 square-mile reservoir with a gross storage capacity of 99,500 acre-feet at elevation 185 feet m.s.l.; (3) a new powerhouse located near the overflow weir outlet containing a single 700-kW turbine-generator; (4) a transmission line; and (5) appurtenant facilities. The dam and reservoir are owned by the State of Louisiana. The project would generate up to 2,750,000 kWh annually. The Applicant states that the proposed project will not result in a change to the operation of Lake Claiborne.

k. *Purpose of Project:* Energy produced at the project would be sold to a local utility.

l. This notice also consists of the following standard paragraphs: A4a, A4c, B, C and D2.

m. *Proposed Scope of Studies under Permit:* A preliminary permit, if issued, does not authorize construction. The Applicant seeks issuance of a preliminary permit for a period of 18 months. The work to be performed under this preliminary permit would consist of gathering necessary data, completing surveys and environmental studies, obtaining necessary Federal, State and local permits, in consultation with the Louisiana Department of Transportation and Development and preparing necessary documentation for the Commission's licensing requirements. Applicant estimates that the cost of works to be performed under the permit would not exceed $5,000.

14a. *Type of Application:* 5MW Exemption.

b. *Project No.:* 6743–000.

c. *Date Filed:* October 4, 1982, and revised on December 10, 1982.

d. *Applicant:* Hudson River—Black River Regulating District.

e. *Name of Project:* Stillwater Reservoir.

f. *Location:* Beaver River in the Town of Webb, Herkimer County, New York.

g. *Filed Pursuant to:* Section 408 of the Energy Security Act of 1980 (16 U.S.C. 2705 and 2708 as amended), and Part I of the Federal Power Act.

h. *Contact Person:* Mr. Kenneth Mayhew, Hudson River—Black River Regulating District, 491 Eastern Blvd., Watertown, New York 13601.

i. *Comment Date:* March 21, 1983.

j. *Description of Project:* The project would utilize existing facilities consisting of: (1) a 1250-foot long dam comprising: (a) a 335-foot long 37-foot high concrete gravity-type center section having spillway crest elevation 1677.3 feet m.s.l. datum surmounted by 2-foot high flashboards and containing five flood-control gates and a logway; (b) a 600-foot long 55-foot high earthfill north section having crest elevation 1687.3 feet m.s.l.; and (c) a 315-foot long 20-foot high earthfill south section having crest elevation 1687.3 feet m.s.l.; (2) a separate 200-foot long emergency spillway surmounted by 2.3-foot high flashboards having crest elevation 1679.5 feet m.s.l.; (3) a reservoir with a surface area of 6,490 acres and a storage capacity of 108,000 acre-feet at surface elevation 1679.3 feet m.s.l.; (4) an inlet structure; (5) a sealed 160-foot long tunnel through rock at the left (south) abutment of the dam center section; and (6) miscellaneous appurtenant facilities.

*Applicant proposes to:* (1) strengthen the dam center section; (2) install new headgates; (3) open the tunnel; (4) construct a powerhouse containing a generating unit having a rated capacity of 1,200 kW operated under a 30-foot head and at a flow of 600 cfs; (5) install

a 4.16/13.2-kV substation; and (6) construct a 400-foot long 13.2-kV transmission line.

k. *Purpose of Project:* Project energy would be sold to Niagara Mohawk Power Corporation. Applicant estimates that the average annual generation would be 6,000,000 kWh.

l. This notice also consists of the following standard paragraphs: A1, B, C and D3a.

m. *Purpose of Exemption:* An exemption, if issued, gives the Exemptee priority of control, development, and operation of the project under the terms of the exemption from licensing, and protects the Exemptee from permit or license applicants that would seek to take or develop the project.

15a. *Type of Application:* Preliminary Permit.

b. *Project No.:* 6876–001.

c. *Date Filed:* January 3, 1983.

d. *Applicant:* Fillmore City Corporation.

e. *Name of Project:* K.P. Water Power Project.

f. *Location:* Chalk Creek in Millard County, Utah.

g. *Filed Pursuant to:* Federal Power Act, 16 U.S.C. 791(a)–825(r).

h. *Contact Person:* Doris Rasmussen, Mayor, P.O. Box 686, Fillmore, Utah 84631.

i. *Comment Date:* March 21, 1983.

j. *Competing Application:* Project No. 6678–000. Date Filed: September 7, 1982. Notice: October 7, 1982. Due Date: January 18, 1983.

k. *Description of Project:* The proposed project would consist of: (1) an existing small storage pond; (2) an existing 24-inch diameter pipe 4,150 feet long; (3) a new 18-inch diameter penstock 3,000 feet long; (4) a new powerhouse with an installed capacity of 170 kW; (5) a new 24-inch diameter discharge pipe tailrace 700 feet long; and (6) other appurtenances. Existing facilities are owned by the Chalk Creek Irrigation Company. Applicant estimates an average annual generation of 1,500,000 kWh.

l. *Purpose of Project:* Project energy would be used for distribution to local customers.

m. This notice also consists of the following standard paragraphs: A3, B, C and D2.

n. *Proposed Scope of Studies under Permit:* A preliminary permit, if issued, does not authorize construction. Applicant seeks issuance of a preliminary permit for a period of three years during which time Applicant would investigate project design, alternatives, financial feasibility, environmental effects of project construction and operation, and project power potential. Depending upon the outcome of the studies, the Applicant would decide whether to proceed with an application for FERC license. Applicant estimates the cost of the studies under permit would be $5,000.

16a. *Type of Application:* Amendment of License.

b. *Project No.:* 2640–001.

c. *Date Filed:* December 27, 1982.

d. *Applicant:* Flambeau Paper Corporation.

e. *Name of Project:* Upper Hydro-Electric.

f. *Location:* Price County, Wisconsin.

g. *Filed Pursuant to:* Section 5.1 of Commission Regulations and Section 6 of the Federal Power Act.

h. *Contact Person:* Mr. Steve J. Semenchuk, President, Flambeau Paper Corporation, Park Falls, Wisconsin 54552.

i. *Comment Date:* March 21, 1983.

j. *Description of Proposed Changes:* Under the proposed amendment, Flambeau Paper Corporation would remove the existing needle dam, which is deteriorated. The dam was used to provide water for a swimming pond operated by the City of Park Falls. Prior to issuance of the license on August 5, 1976, the swimming pond was abandoned. A sheet-piling coffer dam was installed during 1980 to dewater the needle dam area, because the dam served no useful purpose. After the needle dam is removed, fill material will be placed behind the coffer dam.

k. This notice also consists of the following standard paragraphs: B, C and D1.

17 a. *Type of Application:* Preliminary Permit.

b. *Project No.:* 6982–000.

c. *Date Filed:* January 4, 1983.

d. *Applicant:* Capital Development Company.

e. *Name of Project:* Suiattle Mountain Water Power.

f. *Location:* On tributaries of the Suiattle River, partially within Mt. Baker National Forest in Skagit County, Washington.

g. *Filed Pursuant to:* Federal Power Act (16 U.S.C. 791(a)–825(r)).

h. *Contact Person:* Robert L. Blume, President, Capital Development Company, No. 4 South Sound Center, P.O. Box 3487, Lacey, Washington 98503.

i. *Comment Date:* April 11, 1983.

j. *Description of Project:* The proposed project would consist of: (1) ten tributary intake structures distributed along; (2) a 3.5-mile-long pipeline; (3) a one-mile-long penstock; (4) a powerhouse at elevation 600 feet containing a turbine-generating unit with a rated capacity of 6 MW and an average annual output of 51.2 GWh; and (5) a 3-mile-long transmission line connecting to an existing Seattle City Light transmission facility.

A preliminary permit, if issued, does not authorize construction. The Applicant seeks a 36-month preliminary permit to conduct engineering, economic and environmental studies to ascertain project feasibility and to support an application for a license to construct and operate the project. The estimated cost of permit activities is $145,000.

k. This notice also consists of the following standard paragraphs: A4b, A4c, A4d, B, C and D2.

18 a. *Type of Application:* Preliminary Permit.

b. *Project No.:* 6823–000.

c. *Date Filed:* November 3, 1982.

d. *Applicant:* Colorado River Storage Project (CRSP) Power Agency.

e. *Name of Project:* Diamond Fork Project.

f. *Location:* Fifth Water Creek and Diamond Fork Creek in Utah and Wasatch Counties, Utah.

g. *Filed Pursuant to:* Federal Power Act, 16 U.S.C. 791(a)–825(r).

h. *Contact Person:* Donald R. Allen, Esq., Duncan, Allen and Mitchell, 1575 Eye Street, NW., Suite 300, Washington, D.C. 20005.

i. *Comment Date:* April 11, 1983.

j. *Description of Project:* The proposed project would be located entirely within the Uinta National Forest and would consist of the following project works, in series: (1) the proposed 5.7-mile long, 9-foot diameter Syar Tunnel, leading from the existing Strawberry Reservoir, which is owned by the U.S. Bureau of Reclamation, to; (2) the proposed 22.2-MW capacity Syar Powerplant. Water would be discharged into; (3) the proposed 560-acre, 49,700 acre-foot storage capacity Fifth Water Reservoir created by; (4) the proposed 1,300-foot long, 315-foot high Fifth Water Dam. Water from the Fifth Water Reservoir would be conveyed, via; (5) two proposed 1,800-foot long, 7-foot diameter Fifth Water penstocks to; (6) the proposed 1,000-MW capacity Fifth Water Underground Pumped Storage Powerplant, located 1,800 feet below the base of the Fifth Water Dam. Water from the Fifth Water Powerplant would enter; (7) two proposed 2.5-mile long, 9-foot diameter Fifth Water Tunnels and discharge into; (8) the proposed 360-acre, 31,400 acre-foot storage capacity Monks Hollow Reservoir created by; (9) the proposed 1,100-foot long, 250-foot high Monks Hollow Dam. From Monks Hollow Reservoir, water would pass through; (10) the proposed 9.6-MW

capacity Monks Hollow Powerplant located at the base of the dam and then into either Diamond Fork Creek or; (11) the proposed 7-mile long, 7-foot diameter Diamond Fork Pipeline. A portion of the water in the pipeline would be directed through; (12) the proposed 6-MW capacity Diamond Fork Powerplant, while the remainder of the water would continue into the Wasatch Aqueduct. The estimated average annual energy would be 2,500,000 MWh.

k. *Purpose of Project:* Project power would be sold to CRSP members, anticipated members and anticipated affiliates.

l. This notice also consists of the following standard paragraphs: A4b, A4c, A4d, B, C, and D2.

m. *Proposed Scope of Studies under Permit:* A preliminary permit, if issued, does not authorize construction. Applicant seeks issuance of a preliminary permit for a period of 36 months. A Feasibility Assessment Study will be conducted which consists of office and field studies to determine potential power output, review of site geology, project arrangement, operation and power studies, cost estimates, economic and financial analysis, and identification of any significant environmental or institutional restraints. Depending upon the outcome of the studies, the Applicant would decide whether to proceed with an application for FERC license. If a decision to pursue the development of the project is made, advanced feasibility studies and environmental investigations will be conducted. These studies will include geotechnical investigations and environmental data collection and analysis. It is anticipated that the studies will require no new roads, nor disturb or alter the lands or waters in the vicinity of the project. Applicant estimates that the cost of the studies under permit would be $500,000.

a. *Type of Application:* Preliminary Permit.

b. *Project No.:* 6913–000.

c. *Date Filed:* December 7, 1982.

d. *Applicant:* Weber Basin Water Conservancy District.

e. *Name of Project:* West Gateway.

f. *Location:* Weber Aqueduct and Weber River in Davis County, Utah.

g. *Filed Pursuant to:* Federal Power Act, 16 U.S.C. 791(a)–825(r).

h. *Contact Person:* Barbara E. Sneider, Esquire, Chapman, Duff and Paul, 1730 Pennsylvania Ave., NW., Washington, D.C. 20006.

i. *Comment Date:* April 11, 1983.

j. *Description of Project:* The proposed project would utilize flows from the existing Gateway Canal and Tunnel which is operated and maintained by the Applicant and owned by the Bureau of Reclamation. The project would include: (1) a proposed intake structure at an existing canal bifurcation structure; (2) a proposed 2,200–foot long, 60-inch diameter steel penstock; (3) a proposed powerhouse containing one turbine/generator unit with a rated capacity of 6,000 kW operating under a head of 374 feet; (4) a proposed 4.16-kV/46-kV step-up transformer; (5) a proposed 100-foot long, 46-kV transmission line; and (6) appurtenant facilities. Applicant estimates that average annual generation would be 10,000 MWh.

k. *Purpose of Project:* Energy would be used by the Applicant to operate their pumping plants, well pumps, and water treatment plants, or exchanged with the Colorado River Storage Project.

l. This notice also consists of the following standard paragraphs: A4a. A4c, B, C, and D2.

m. *Proposed Scope of Studies under Permit:* A preliminary permit, if issued , does not authorize construction. Applicant seeks issuance of a preliminary permit for a period of 36 months during which time Applicant would investigate project design alternatives, financial feasibility, environmental effects of project construction and operation, and project power potential. Depending upon the outcome of the studies, the Applicant would decide whether to proceed with an application for FERC license. Applicant estimates that the cost of the studies under permit would be $150,000.

20 a. *Type of Application:* Preliminary Permit.

b. *Project No.:* 6996–000.

c. *Date Filed:* January 12, 1983.

d. *Applicant:* Power Resources Development Corporation.

e. *Name of Project:* The Talcville Project.

f. *Location:* On the East Branch of Oswegatchie River, in St. Lawrence County, New York.

g. *Filed Pursuant to:* Federal Power Act, 16 U.S.C. 791(a)–825(r).

h. *Contact Person:* Mr. Roger P. Swanson, Power Resources Development Corporation, 49 Onondaga Street, Skaneateles, New York 13152.

i. *Comment Date:* April 15, 1983.

j. *Description of Project:* The proposed project would consist of: (1) the existing 110-foot long, 10-foot high concrete Talcville Dam; (2) an existing 150-foot long intake canal; (3) an existing powerhouse which will house a single generating unit having a rated capacity of 840 kW; (4) proposed transmission lines to interconnect with existing transmission lines owned by the Niagara Mohawk Power Corporation; and (5) appurtenant facilities. All existing project facilities are owned by Gouverneur Talc Company, Inc. of Gouverneur, New York. The Applicant estimates that the average annual energy output would be 4.4 GWh.

k. *Purpose of Project:* The most likely market for the energy derived at the proposed project would be the Niagara Mohawk Power Corporation.

l. This notice also consists of the following standard paragraphs: A4a, A4c, B, C, and D2.

m. *Proposed Scope of Studies under Permit:* A preliminary permit, if issued, does not authorize construction. The term of the proposed preliminary permit is 36 months. The work proposed under the preliminary permit would include economic analysis, preparation of preliminary engineering plans, and a study of environmental impacts. Based on results of these studies Applicant would decide whether to proceed with more detailed studies, and the preparation of an application for license to construct and operate the project. Applicant estimates that the cost of the work to be performed under the preliminary permit would be $32,000.

21 a. *Type of Application:* Preliminary Permit.

b. *Project No.:* 6707–000.

c. *Date Filed:* September 24, 1982, and revised December 9, 1982.

d. *Applicant:* Graves, Arkoosh and Arkoosh.

e. *Name of Project:* Sheep Falls.

f. *Location:* On Henry's Fork of Snake River, near the City of Ashton, Freemont County, Idaho.

g. *Filed Pursuant to:* Federal Power Act, 16 U.S.C. 791(a)–825(r).

h. *Contact Person:* Mr. John C. Arkoosh, 601 Nevada Street, Gooding, Idaho 83330.

i. *Comment Date:* April 11, 1983.

j. *Description of Project:* The proposed new run-of-river project to be located at River-mile 69.2 would affect lands of the United States within the Targhee National Forest and would consist of: (1) a 6-foot high 120-foot long concrete diversion structure having crest elevation 5,836 m.s.l. datum; (2) a 10-foot high 100-foot long inlet structure along the left (north) bank; (3) a 12-foot diameter 1700-foot long tunnel; (4) a 28-foot wide 9-foot deep 2,000-foot long lined canal; (5) an inlet structure; (6) a 12-foot diameter 150-foot long steel penstock; (7) a powerhouse containing four generating units having a total rated capacity of 4,150 kW operated under a 60-foot head and at a flow of 1,000 cfs; (8) a tailrace; (9) a 11,000-foot long 44-kV

transmission line; and (10) appurtenant facilities.

Project energy would be sold to Utah Power & Light Company or to Fall River Rural Electric Cooperative, Inc. Applicant estimates that the average annual generation would be 18.17 GWh.

k. This notice also consists of the following standard paragraphs: A4b, A4c, A4d, B, C, and D2.

l. *Proposed Scope of Studies under Permit:* A preliminary permit, if issued, does not authorize construction. Applicant seeks issuance of a preliminary permit for a period of 36 months, during which time it would perform studies and would prepare an application for an FERC license. Applicant estimates the cost of the work under the permit would be $60,000.

22a. *Type of Application:* Preliminary Permit.

b. *Project No:* 6874–000.

c. *Date Filed:* November 23, 1982.

d. *Applicant:* Hydro Power Development, Inc.

e. *Name of Project:* South Fork Eagle Creek Project.

f. *Location:* On South Fork Eagle Creek, near Bissell, in Clackamas County, Oregon.

g. *Filed Pursuant to:* Federal Power Act, 16 U.S.C. 791(a)–825(r).

h. *Contact Person:* Mr. Bill Sundin, Hydro Power Development, Inc., P.O. Box 511, 16840 Hoffman Lane, Sandy, Oregon 97055.

i. *Comment Date:* April 11, 1983.

j. *Description of Project:* The proposed run-of-the-river project would consist of: (1) a 6-foot-high, 30-foot-long concrete diversion structure; (2) a 20,000-foot-long, 48-inch-diameter steel pipeline; (3) a powerhouse containing a single 7,000-kW generating unit with an estimated annual generation of 39.40 GWh; and (4) appurtenant facilities. The project would affect Mt. Hood National Forest lands. Project power would be sold to Pacific Power & Light Company or the Bonneville Power Administration.

A preliminary permit, if issued, does not authorize construction. The Applicant seeks a 36-month permit to study the feasibility of constructing and operating the project and estimates the cost of the studies at $83,000.

k. This notice also consists of the following standard paragraphs: A4b, A4c, A4d, B, C and D2.

23a. *Type of Application:* Preliminary Permit.

b. *Project No:* 6899–000.

c. *Date Filed:* December 2, 1982, and supplemented on January 13, 1983.

d. *Applicant:* Municipal Electric Authority of Georgia.

e. *Name of Project:* Carter's Lake Hydro Project.

f. *Location:* Jasper, in Murray County, Georgia on the Coosawatte River.

g. *Filed Pursuant to:* Federal Power Act 16 U.S.C. 791(a)–825(r).

h. *Contact Person:* Mr. Donald Stokley, General Manager MEAG, 1470 Riveredge Parkway, N.W., Atlanta, Georgia 30328.

i. *Comment Date:* March 21, 1983.

j. *Competing Application:* Project No. 6987–000; Date Filed: December 1, 1982; Notice Due Date: February 28, 1983.

k. *Description of Project:* The proposed project would utilize a U.S. Army Corps of Engineers' dam and reservoir, and would consist of: (1) a proposed intake structure; (2) a proposed new powerhouse with an installed capacity of 4 MW; (3) a proposed return channel; (4) a new transmission line; and (5) appurtenant facilities. Applicant estimates that the average annual generation would be 11.56 GWh. All power generated would be used in the Applicant's distribution system.

l. This notice also consists of the following standard paragraphs: A3, B, C, and D2.

24a. *Type of Application:* Preliminary Permit.

b. *Project No:* 6845–000.

c. *Date Filed:* November 12, 1982.

d. *Applicant:* Hopewell Power Company.

e. *Name of Project:* Hopewell Hydroelectric Power Project.

f. *Location:* Hopewell, York-Cherokee County, South Carolina on the Broad River.

g. *Filed Pursuant to:* Federal Power Act, 16 U.S.C. 791(a)–825(r).

h. *Contact Person:* Harry S. D. Adams, Manager, Hydro Resources, P.O. Box 50, One Jefferson Square, Boise, Idaho 83728.

i. *Comment Date:* April 8, 1983.

j. *Description of Project:* The proposed project would consist of: (1) a proposed 40-foot high and 1,100-foot earthen dam; (2) a reservoir with an estimated storage capacity of 45,850 acre-feet; (3) a new powerhouse with an installed capacity of 8,680 kW; (4) a proposed tailrace; (5) a new transmission line approximately 2.5 miles long; and (6) appurtenant facilities. Applicant estimates that average annual generation would be 45.9 GWh. All power generated would be sold to a local utility company.

k. This notice also consists of the following standard paragraphs: A4b, A4c, A4d, B, C, and D2.

25a. *Type of Application:* Preliminary Permit.

b. *Project No:* 6846–000.

c. *Date Filed:* November 12, 1982.

d. *Applicant:* Rowell Power Company.

e. *Name of Project:* Rowell Hydroelectric Power Project.

f. *Location:* Rowell, Lancaster County, South Carolina on the Catawba River.

g. *Filed Pursuant to:* Federal Power Act, 16 U.S.C. 791(a)–825(r).

h. *Contact Person:* Harry S. D. Adams, Manager, Hydro Resources, P.O. Box 50, One Jefferson Square, Boise, Idaho 83728.

i. *Comment Date:* April 8, 1983.

j. *Description of Project:* The proposed project would consist of: (1) a proposed 20-foot high and 1,200-foot earthen dam; (2) a reservoir with an estimated storage capacity of 25,660 acre-feet; (3) a new powerhouse with an installed capacity of 20.2 MW; (4) a proposed tailrace; (5) a new transmission line approximately 1.5 miles long; and (6) appurtenant facilities. Applicant estimates that average annual generation would be 91 GWh. All power generated would be sold to a local utility company.

k. This notice also consists of the following standard paragraphs: A4b, A4c, A4d, B, C, and D2.

26a. *Type of Application:* Preliminary Permit.

b. *Project No.:* 6847–000.

c. *Date Filed:* November 12, 1982.

d. *Applicant:* Lilesville Power Company.

e. *Name of Project:* Lilesville Hydroelectric Power Project.

f. *Location:* Lilesville, Anson County, North Carolina on the Pee Dee River.

g. *Filed Pursuant to:* Federal Power Act, 16 U.S.C. 791(a)–825(r).

h. *Contact Person:* Harry S. D. Adams, Manager, Hydro Resources, P.O. Box 50, One Jefferson Square, Boise, Idaho 83728.

i. *Comment Date:* April 7, 1983.

j. *Description of Project:* The proposed project would consist of: (1) a proposed 40-foot-high and 1,700-foot earthen dam; (2) a reservoir with an estimated storage capacity of 44,300 acre-feet; (3) a new powerhouse with an installed capacity of 18.24 MW; (4) a proposed tailrace; (5) a new transmission line approximately two miles long; and (6) appurtenant facilities. Applicant estimates that average annual generation would be 97.33 GWh. All power generated would be sold to a local utility company.

k. This notice also consists of the following standard paragraphs: A4b, A4c, A4d, B, C, and D2.

27a. *Type of Application:* Preliminary Permit.

b. *Project No.:* 6858–000.

c. *Date Filed:* November 17, 1982.

d. *Applicant:* Hy-Tech Company.

e. *Name of Project:* Honeymoon Creek.

f. *Location:* On Honeymoon Creek in Sanders County, Montana.

g. *Filed Pursuant to:* Federal Power Act 16 U.S.C. 791(A)–825(r).

h. *Contact Person:* Carl W. Haywood, 2109 Broadview Drive, Lewiston, Idaho 83501.

i. *Comment Date:* April 11, 1983.

j. *Description of Project:* The proposed project will consist of: (1) a proposed 4-foot-high and 50-foot-long diversion structure; (2) a negligible reservoir with a normal maximum pool elevation of 3,720 feet msl; (3) approximately 4 miles of 12.5 kV transmission line to connect the project to an existing Montana Power Company line; (4) a proposed powerhouse to contain 3 generating units with a total installed generating capacity of 950 kW; and (5) appurtenant facilities. The Applicant estimates the average annual generating capacity to be 2,883 MWh. The Applicant also stated that "the project is located entirely on U.S. Forest Service land in the Lolo National Forest."

k. *Purpose of Project:* Hy-Tech plans to market the hydroelectric power to the Montana Power Company.

l. This notice also consists of the following standard paragraphs: A4a, A4c, B, C and D2.

28a. *Type of Application:* Preliminary Permit.

b. *Project No.:* 6954–000.

c. *Date Filed:* December 23, 1982.

d. *Applicant:* Hydro Power Development, Inc.

e. *Name of Project:* Ladd Creek Hydroelectric Project.

f. *Location:* In Hood River County, Oregon on Ladd Creek within the Mount Hood National Forest.

g. *Filed Pursuant to:* Federal Power Act, 16 U.S.C. 791(a)–825(r).

h. *Contact Person:* Mr. Carl Rounds, President, General Energy Development, Inc., 1885 West Washington Ave., Stayton, Oregon 97383.

i. *Comment Date:* April 11, 1983.

j. *Description of Project:* The proposed project would consist of: (1) a 6-foot-high, 30-foot-long diversion structure; (2) a 48-inch-diameter, 9,290-foot-long penstock; (3) a powerhouse to contain a singler generating unit with a rated capacity of 3,000 kW, operating under a head of 574 feet; and (4) a 100-foot-long transmission line to tie into an existing Portland General Electric transmission line. The average annual energy output is 16, 837,000 kWh.

A preliminary permit, if issued, does not authorize construction. The Applicant seeks issuance of a preliminary permit for a period of 36 months to study the feasibility of constructing and operating the project. The estimated cost for conducting these studies is $83,000. No new access roads will be needed to conduct these studies.

k. *Purpose of Project:* Project power will be sold to either Portland General Electric or Bonneville Power Administration.

l. This notice also consists of the following standard paragraphs: A4a, A4c, B, C and D2.

**Competing Applications**

A. 1. Exemptions for Small Hydroelectric Power Project under 5MW Capacity—Any qualified license applicant desiring to file a competing application must submit to the Commission, on or before the specified comment date for the particular application, either a competing license application that proposes to develop at least 7.5 megawatts in that project, or a notice of intent to file such a license application. Submission of a timely notice of intent allows an interested person to file the competing license application no later than 120 days after the specified comment date for the particular application. Applications for preliminary permit will not be accepted.

A notice of intent must conform with the requirements of 18 CFR 4.33 (b) and (c) (1982). A competing license application must conform with the requirements of 18 CFR 4.33 (a) and (d).

A2. Applications for License—Anyone desiring to file a competing application must submit to the Commission, on or before the specified comment date for the particular application, either the competing appliction itself (see 18 CFR 4.33 (a) and (d), and Part 16, where applicable) or a notice of intent (see 18 CFR 4.33 (b) and (c)) to file a competing application. Submission of a timely notice of intent allows an interested person to file an acceptable competing application no later than the time specified in § 4.33(c) or §§ 4.101 to 4.104 (1982).

A3. Public notice of the filing of the initial application, which has already been given, established the due date for filing competing applications or notices of intent. In accordance with the Commission's regulations, no competing application for license, exemption or preliminary permit, or notices of intent to file competing applications, will be accepted for filing in response to this notice (see 18 CFR 4.30 to 4.33 or §§ 4.101 to 4.104 (1982), as appropriate). Any application for license or exemption from licensing, or notice of intent to file a license or an exemption application, must be filed in accordance with the Commission's regulations (see 18 CFR 4.30 to 4.33 or §§ 4.101 to 4.104 (1982), as appropriate).

**Preliminary Permits**

A4a. Existing Dam or Natural Water Feature Project—Anyone desiring to file a competing application for preliminary permit for a proposed project at an existing dam or natural water feature project, must submit the competing application to the Commission on or before 30-days after the specified comment date for the particular application (see 18 CFR 4.30 to 4.33 (1982)). A notice of intent to file a competing application for preliminary permit will not be accepted for filing.

A4b. No Existing Dam—Anyone desiring to file a competing application for preliminary permit for a proposed project where no dam exists or there are proposed to be major modifications, must submit to the Commission on or before the specified comment date for the particular application, the competing application itself or a notice of intent to file such an application (see 18 CFR 4.30 to 4.33 (1982)).

A4c. The Commission will accept applications for license or exemption from licensing, or a notice of intent to submit such an application in response to this notice. A notice of intent to file an application for license or exemption must be submitted to the Commission on or before the specified comment date for the particular application. Any application for license or exemption from licensing must be filed in accordance with the Commission's regulations (see 18 CFR 4.30 to 4.33 or §§ 4.101 to 4.104 (1982), as appropriate).

A4d. Submission of a timely notice of intent to file an application for preliminary permit allows an interested person to file an acceptable competing application for preliminary permit no later than 60 days after the specified comment date for the particular application.

B. *Comments, Protests, or Motions to Intervene*—Anyone may submit comments, a protest, or a motion to intervene in accordance with the requirements of the Rules of Practice and Procedure, 18 CFR 385.210, 385.211, 385.214 (1982). In determining the appropriate action to take, the Commission will consider all protests or other comments filed, but only those who file a motion to intervene in accordance with the Commission's Rules may become a party to the proceeding. Any comments, protests, or motions to intervene must be received on or before the specified comment date for the particular application.

C. *Filing and Service of Responsive Documents*—Any filings must bear in all capital letters the title "COMMENTS",

"NOTICE OF INTENT TO FILE COMPETING APPLICATION", "COMPETING APPLICATION", "PROTEST" or "MOTION TO INTERVENE", as applicable, and the Project Number of the particular application to which the filing is in response. Any of the above named documents must be filed by providing the original and the number of copies required by the Commission's regulations to: Kenneth F. Plumb, Secretary, Federal Energy Regulatory Commission, 825 North Capitol Street, N.E., Washington, D.C. 20426. An additional copy must be sent to: Fred E. Springer, Chief, Applications Branch, Division of Hydropower Licensing, Federal Energy Regulatory Commission, Room 208 RB at the above address. A copy of any notice of intent, competing application or motion to intervene must also be served upon each representative of the Applicant specified in the particular application.

**Agency Comments**

D1. License applications (5 MW or less capacity)—Federal, State, and local agencies that receive this notice through direct mailing from the Commission are requested to provide comments pursuant to the Federal Power Act, the Fish and Wildlife Coordination Act, the Endangered Species Act, the National Historic Preservation Act, the Historical and Archeological Preservation Act, the National Environmental Policy Act, Pub. L. No. 88-29, and other applicable statutes. No other formal requests for comments will be made.

Comments should be confined to substantive issues relevant to the issuance of a license. A copy of the application may be obtained directly from the Applicant. If an agency does not file comments with the Commission within the time set for filing comments, it will be presumed to have no comments. One copy of an agency's comments must also be sent to the Applicant's representatives.

D2. Preliminary permit applications—Federal, State, and local agenices are invited to file comments on the described application. (A copy of the application may be obtained by agencies directly from the Applicant.) If an agency does not file comments within the time specified for filing comments, it will be presumed to have no comments. One copy of an agency's comments must also be sent to the Applicant's representatives.

D3a. Exemption applications (5 MW or less capacity)—The U.S. Fish and Wildlife Service, The National Marine Fisheries Service, and the State Fish and Game agency(ies) are requested, for the purposes set forth in Section 408 of the Act, to file within 60 days from the date of issuance of this notice appropriate terms and conditions to protect any fish and wildlife resources or to otherwise carry out the provisions of the Fish and Wildlife Coordination Act. General comments concerning the project and its resources are requested; however, specific terms and conditions to be included as a condition of exemption must be clearly identified in the agency letter. If an agency does not file terms and conditions within this time period, that agency will be presumed to have none. Other Federal, State, and local agencies are requested to provide any comments they may have in accordance with their duties and responsibilities. No other formal requests for comments will be made. Comments should be confined to substantive issues relevant to the granting of an exemption. If an agency does not file comments within 60 days from the date of issuance of this notice, it will be presumed to have no comments. One copy of an agency's comments must also be sent to the Applicant's representatives.

D3b. Exemption applications (Conduit)—The U.S. Fish and Wildlife Service, The National Marine Fisheries Service, and the State Fish and Game agency(ies) are requested, for the purposes set forth in Section 30 of the Act, to file within 45 days from the date of issuance of this notice appropriate terms and conditions to protect any fish and wildlife resources or otherwise carry out the provisions of the Fish and Wildlife Coordination Act. General comments concerning the project and its resources are requested; however, specific terms and conditions to be included as a condition of exemption must be clearly identified in the agency letter. If an agency does not file terms and conditions within this time period, that agency will be presumed to have none. Other Federal, State, and local agencies are requested to provide comments they may have in accordance with their duties and responsibilities. No other formal requests for comments will be made. Comments should be confined to substantive issues relevant to the granting of an exemption. If an agency does not file comments within 45 days from the date of issuance of this notice, it will be presumed to have no comments. One copy of an agency's comments must also be sent to the Applicant's representatives.

Dated February 4, 1983.

**Kenneth F. Plumb,**

*Secretary.*

[FR Doc. 83-3414 Filed 2-9-83; 8:45 am]

BILLING CODE 6717-01-M

## Office of Conservation and Renewable Energy

### Energy Conservation Program for Consumer Products; Representative Average Unit Costs of Energy

*Correction*

In FR Doc. 83-1907 beginning on page 3409 in the issue of Tuesday, January 25, 1983, make the following correction:

On page 3409, in the table at the bottom of the page, in the entry for "Electricity" in the third column, "As required by test procedure", the entry now reading "$0.0673/kWh...." should have read "$0.0763/kWh....".

BILLING CODE 1505-01-M

## ENVIRONMENTAL PROTECTION AGENCY

[A-4-FRL 2303-2]

### PSD Permit for Kentucky Utilities Company—Final Decision

**AGENCY:** Environmental Protection Agency.

**ACTION:** Notice.

**SUMMARY:** Notice is hereby given that on December 21, 1982, the Administrator (Anne M. Gorsuch) of the Environmental Protection Agency (EPA) issued an order denying two petitions for review of a Prevention of Significant Deterioration (PSD) permit issued on April 15, 1982, by EPA Region IV to Kentucky Utilities Company. The permit was issued for the construction of two coal-fired utility boilers (650 MW each) to be located in Hancock County, Kentucky.

**DATES:** The effective date of the Kentucky Utilities PSD permit is January 21, 1983. Construction must begin within 18 months of this date or the permit will become invalid.

**ADDRESSES:** Copies of the permit and the order denying the petitions for review are available for public inspection or upon request at the following locations:

Environmental Protection Agency, Region IV, Air Management Branch, 345 Courtland Street, NE., Atlanta, Georgia 30365

Division of Air Pollution Control, Kentucky Natural Resources and

Environmental Protection Cabinet, Fort Boone Plaza, 18 Reilly Road, Frankfort, Kentucky 40601.

**FOR FURTHER INFORMATION CONTACT:** Bill Wagner of the EPA Region IV Air Management Branch at the Atlanta address given above, telephone 404/881-7654 (FTS 257-7654).

**SUPPLEMENTARY INFORMATION:** On May 14, 1982, Willamette Industries and Hancock County petitioned the EPA Administrator (pursuant to 40 CFR 124.19(a) to review the Final Determination of EPA Region IV's Regional Administrator with respect to Kentucky Utilities Company's application for a PSD permit to build two coal-fired utility boilers in Hancock County, Kentucky. Kentucky Utilities filed a separate petition for review. The petitions raised several questions concerning Region IV's handling of the PSD permit application.

After having reviewed both petitions and all necessary background information, the EPA Administrator determined that the petitioners failed to show that the permit determination was either clearly erroneous or involved issues which should have been reviewed as a matter of discretion. See 40 CFR 124.19(a)(1) and (2).

Accordingly, on December 21, 1982, the EPA Administrator issued two orders denying all petitions for review.

As a result of those orders, the final permit decision as issued April 15, 1982, will not be changed. The effective date of the permit is January 21, 1983. This is also the date of final agency action under 40 CFR 124.19(f)(1) and Section 307 of the Clean Air Act, for purposes of judicial review. If construction does not commence within 18 months after this effective date, or if construction is discontinued for a period of 18 months or more, or if construction is not completed within a reasonable time, the permit shall expire and authorization to construct shall become invalid.

Dated: January 28, 1983.

Charles R. Jeter,

*Regional Administrator.*

[FR Doc. 83-3676 Filed 2-9-83; 8:45 am]

BILLING CODE 6560-50-M

## FEDERAL MARITIME COMMISSION

**[Docket No. 83-8]**

### East Coast Colombia Conference et al. v. Agropecuaria Y Maritima Santa Rosa Ltda. (Agromar Lines); Filing of Complaint and Assignment

Notice is given that a complaint filed by East Coast Colombia Conference, et al. against Agropecuaria y Maritima Santa Rosa Ltda. (Agromar Lines) was served February 3, 1983. Complainant alleges that respondent has operated as a common carrier by water in foreign commerce without a tariff on file in violation of sections 16 Second, 17 and 18 (b)(1) and (3) of the Shipping Act, 1916.

This proceeding has been assigned to Administrative Law Judge Norman D. Kline. Hearing in this matter, if any is held, shall commence within the time limitations prescribed in 46 CFR 502.61. The hearing shall include oral testimony and cross-examination in the discretion of the presiding officer only upon proper showing that there are genuine issues of material fact that cannot be resolved on the basis of sworn statements, affidavits, depositions or other documents or that the nature of the matter in issue is such that an oral hearing and cross-examination are necessary for the development of an adequate record.

Francis C. Hurney,

*Secretary.*

[FR Doc. 83-3562 Filed 2-9-83; 8:45 am]

BILLING CODE 6730-01-M

## FEDERAL RESERVE SYSTEM

### Formation of Bank Holding Companies; First Clyde Banc Corp. et al.

The companies listed in this notice have applied for the Board's approval under section 3(a)(1) of the Bank Holding Company Act (12 U.S.C. 1842(a)(1)) to become bank holding companies by acquiring voting shares or assets of a bank. The factors that are considered in acting on the applications are set forth in section 3(c) of the Act (12 U.S.C. 1842(c)).

Each application may be inspected at the offices of the Board of Governors, or at the Federal Reserve Bank indicated for that application. With respect to each application, interested persons may express their views in writing to the address indicated for that application. Any comment on an application that requests a hearing must include a statement of why a written presentation would not suffice in lieu of a hearing, identifying specifically any questions of fact that are in dispute and summarizing the evidence that would be presented at a hearing.

A. **Federal Reserve Bank of Cleveland** (Lee S. Adams, Vice President) 1455 East Sixth Street, Cleveland, Ohio 44101:

1. *First Clyde Banc Corp.*, Clyde, Ohio; to become a bank holding company by acquiring 100 percent of the voting shares of The Clyde Savings Bank Company, Clyde, Ohio. Comments on this application must be received not later than March 2, 1983.

2. *First Commonwealth Financial Corporation*, Indiana, Pennsylvania; to become a bank holding company by acquiring 100 percent of the voting shares of National Bank of the Commonwealth, Indiana, Pennsylvania. Comments on this application must be received not later than March 4, 1983.

Board of Governors of the Federal Reserve System, February 4, 1983.

James McAfee,

*Associate Secretary of the Board.*

[FR Doc. 83-3566 Filed 2-9-83; 8:45 am]

BILLING CODE 6210-01-M

### Bank Holding Companies; Proposed, De Novo Nonbank Activities; Citicorp et al.

The organizations identified in this notice have applied, pursuant to section 4(c)(8) of the Bank Holding Company Act (12 U.S.C. 1843(c)(8)) and § 225.4(b)(1) of the Board's Regulation Y (12 U.S.C. 1843(c)(8)) and § 225.4(b)(1) of the Board's Regulation Y (12 CFR 225.4(b)(1)), for permission to engage *de novo* (or continue to engage in an activity earlier commenced *de novo*), directly or indirectly, solely in the activities indicated, which have been determined by the Board of Governors to be closely related to banking.

With respect to these applications, interested persons may express their views on the question whether consummation of the proposal can "reasonably be expected to produce benefits to the public, such as greater convenience, increased competition, or gains in efficiency, that outweigh possible adverse effects, such as undue concentration of resources, decreased or unfair competition, conflicts of interests, or unsound banking practices." Any comment that requests a hearing must include a statement of the reasons a written presentation would not suffice in lieu of a hearing, identifying specifically any questions of fact that are in dispute, summarizing the evidence that would be presented at a hearing, and indicating how the party commenting would be aggrieved by approval of that proposal.

The applications may be inspected at the offices of the Board of Governors or at the Federal Reserve Bank indicated. Comments and requests for hearing should identify clearly the specific application to which they relate, and should be submitted in writing and received by the appropriate Federal Reserve Bank not later than the date indicated.

A. **Federal Reserve Bank of New York** (A. Marshall Puckett, Vice President) 33 Liberty Street, New York, New York 10045:

1. *Citicorp*, New York, New York (consumer finance and credit-related insurance activities; Nevada): To establish a *de novo* office of its subsidiary, Citicorp Homeowners, Inc. and Citicorp Person-to-Person Mortgage Corporation, located in Las Vegas, Nevada. The activities in which the *de novo* office of Citicorp Homeowners, Inc. proposes to engage are as follows: the making or acquiring of loans and other extensions of credit, secured or unsecured, for consumer and other purposes; the sale of credit related life and accident and health or decreasing or level (in the case of single payment loans) term life insurance by licensed agents or brokers, as required; the sale of consumer oriented financial management courses; the servicing, for any person, of loans and other extensions of credit; the making, acquiring, and servicing, for its own account and for the account of others, of extensions of credit to individuals secured by liens on residential or non-residential real estate; and the sale of mortgage life and mortgage disability insurance directly related to extensions of mortgage loans. The proposed service area for the *de novo* office of Citicorp Homeowners, Inc. shall be comprised of the entire State of Nevada for all the aforementioned proposed activities. Credit related life, accident, and health insurance may be written by Family Guardian Life Insurance Company, an affiliate of Citicorp Homeowners, Inc. Comments on this application must be received not later than March 4, 1983.

B. **Federal Reserve Bank of Philadelphia** (Thomas K. Desch, Vice President) 100 North 6th Street, Philadelphia, Pennsylvania 19105:

1. *Philadephia National Corporation*, Philadelphia, Pennsylvania; (mortgage banking activities; Missouri, Illinois): To engage, through its subsidiary, Colonial Mortgage Service Company Associates, Inc., (doing business as CMSC Mortgage Company) in the origination of FHA, VA and conventional residential mortgage loans and second mortgage loans. These activities would be conducted from a proposed new office of Colonial Mortgage Service Company Associates, Inc. in St. Charles, Missouri, serving the States of Missouri and Illinois. Comments on this application must be received not later than March 2, 1983.

C. **Federal Reserve Bank of Richmond** (Lloyd W. Bostian, Jr., Vice President) 701 East Byrd Street, Richmond, Virginia 23261:

1. *Dominion Bankshares Corporation*, Roanoke, Virginia (mortgage banking, insurance activities; Virginia): To engage *de novo* through its subsidiary, Dominion Bankshares Mortgage Corporation, in mortgage banking activities of originating residential, commercial, industrial, and construction loans for its own account and for sale to other, servicing such loans for others, and in the sale of credit life insurance, credit accident and health insurance, credit disability, mortgage redemption and mortgage accident and health insurance in connection with such mortgage loans, and to engage *de novo* through its subsidiary, Dominion Bankshares Services, Inc., in acting as insurance agent or broker with respect to credit life insurance, credit accident and health insurance, credit disability, mortgage redemption and mortgage accident and health insurance related to or arising out of loans made or credit transactions involving Dominion Bankshares Mortgage Corporation. These activities would be conducted from an office in Richmond, Virginia, and serve the Richmond Standard Metropolitan Statistical Area, the city of Charlottesville and the counties of Albemarle, Fluvanna, Louisa, and Orange. Comments on this application must be received not later than March 4, 1983.

D. **Federal Reserve Bank of Kansas City** (Thomas M. Hoenig, Vice President) 925 Grand Avenue, Kansas City, Missouri 64198:

1. *BancOklahoma Corp.*, Tulsa, Oklahoma (lending and loan servicing activities; Oklahoma): To engage, through a subsidiary known as BancOklahoma Mortgage Corp. (formerly BancOklahoma Service Corp.), in the following activities: mortgage banking activities, including the origination, warehousing and selling of first mortgage loans, second mortgage home improvement loans, equity loans, interim construction loans and land acquisition loans for its own account or for the account of others, and in addition, the servicing of such loans also for its own account or for the account of others. Such activities will be conducted at offices in Tulsa, Oklahoma and will serve the Tulsa S.M.S.A. Comments on this application must be received not later than March 4, 1983.

2. *Centinal Bank Shares, Inc.*, Taos, New Mexico (data processing, New Mexico): To provide data processing and data transmission services, data bases or facilities for the internal operations of the holding company and its subsidiaries, and providing to others data processing and data transmission services, facilities, data bases or access thereto with respect to banking, financial or economic data and in accordance with the further conditions specified in § 225.4(a)(8) of the Board of Governor's Regulation Y. These activities will be performed from an office located on the premises of the bank holding company's subsidiary bank, Centinal Bank of Taos, Taos, New Mexico, serving the town of Taos, New Mexico and the surrounding rural area. Comments on this application must be received not later than March 4, 1983.

Board of Governors of the Federal Reserve System, February 4, 1983.

James McAfee,

*Associate Secretary of the Board.*

[FR Doc. 83-3567 Filed 2-8-83; 8:45 am]

BILLING CODE 6210-01-M

## GENERAL SERVICES ADMINISTRATION

### The Privacy Act of 1974; Report on New System of Records

**AGENCY:** General Services Administration.

**ACTION:** Notification of new system of records.

**SUMMARY:** The purpose of this document is to give notice, pursuant to the provisions of the Privacy Act of 1974, 5 U.S.C. 552a, of intent to establish a new system of records that will be maintained by GSA The system of records, Employment under commercial activities contracts GSA/GOVT-2, is being established to collect information on former Federal employees who are hired by contractors. A new system report was filed with the President of the Senate, the Speaker of the House, and the Office of Management and Budget on January 21, 1983. A waiver of the 60-day advance notice requirements of OMB Circular A-108 was requested from the Office of Management and Budget.

**DATES:** Any interested party may submit written comments regarding this proposed system. To be considered, comments must be received on or before the 30th day following publication of this notice. The new system of records shall become effective as proposed without further notice on the 30th day following publication of this notice unless comments are received that would result in a contrary determination.

**ADDRESS:** Address comments to General Services Administration (ORAR), Washington, DC 20405.

**FOR FURTHER INFORMATION CONTACT:** Mr. William Hiebert, GSA Privacy Act Officer, telephone (202) 566–0673.

## Background

Federal employees who, as a result of a transfer of work from in-house to contract, receive comparable employment offers from the contractor, or who go to work for the contractor in any capacity within 90 days of the date of transfer, are ineligible for severance pay. FPR Temporary Regulation 63, Supplement 1, prescribes an exchange of employment information between agencies and commercial contract activities. The purpose is for the effective administration of the A–76 program and to preclude the payment of severance pay to ineligible persons. In order to administer the directive, this proposed system of records will be used to collect the information which will be used to ensure that severance pay is properly distributed by the Government.

The proposed new system of records is as follows:

## GSA/GOVT-2

**SYSTEM NAME:**

Employment under commercial activities contracts.

**SYSTEM LOCATION:**

Records on former employees are located at the civilian Federal agency from where the employee was involuntarily separated and at the commercial contract activity.

**CATEGORIES OF INDIVIDUALS COVERED BY THE SYSTEM:**

Former Federal employees involuntarily separated from Government employment as a result of a commercial activity contract.

**CATEGORIES OF RECORDS IN THE SYSTEM:**

Records in the system include name and social security number of employees involuntarily separated from Government employment as a result of a contract and who accepted or rejected offers of employment and the monetary value of pay and benefits offered.

**AUTHORITY FOR MAINTENANCE OF THE SYSTEM:**

Title 5 CFR 550.701(b)(6); E.O. 11257, November 17, 1965; and FPR Temporary Regulation 63, Supplement 1.

**PURPOSE(S):**

The purpose of the system is to provide Government agenies with necessary information on former Federal employees hired by contractors to ensure the proper distributions of severance pay by the Govenment.

**ROUTINE USE OF RECORDS MAINTAINED IN THE SYSTEM, INCLUDING CATEGORIES OF USERS AND THE PURPOSE OF SUCH USES:**

a. In the event that a record indicates a violation or potential violation of law, whether civil, criminal, or regulatory in nature, and whether arising by general statute or particular program statute, or by regulation, rule, or order issued pursuant thereto, the relevant records in the system of records may be referred, as a routine use, to the appropriate agency, whether Federal, State, or local, charged with the responsibility of investigation or prosecuting such violation or charged with enforcing or implement the statute or rule, regulation, or order issued pursuant thereto.

b. A record from this system of records may be disclosed to a Member of Congress or to a Congressional staff member in response to an inquiry of the Congressional office made at the request of the individual about whom the record is maintained.

c. A record from this system if records may be disclosed to the commercial activity contractor to provide the contractor with the necessary information on former Federal employees who could receive employment offers from the contractor.

d. A record from this system of records may be disclosed to a Federal agency, in response to its request, in connection with the hiring or retention of any employee to the extent that the information is relevant and necessary to the requesting agency's decision on the matter.

e. A record from this system of records may be disclosed to an authorized appeal or grievance examiner, formal complaints examiner, equal employment opportunity investigator, arbitrator, or other duly authorized official engaged in investigation or settlement of a grievance, complaint, or appeal filed by an employee. A record from this system of records may be disclosed to the Office of Personnel Management in accordance with the agency's responsibility for evaluation of Federal personal management.

f. The information contained in this system of records may be disclosed to the Office of Management and Budget in connection with the review of private relief legislation at any stage of the legislative coordination and clearance process.

g. The information contained in this system of records may be disclosed to officials of labor organizations recognized under 5 U.S.C. chapter 71 when relevant and necessary to their duties of exclusive representation concerning personnel policies, practices, and matters affecting working conditions.

**POLICIES AND PRACTICES FOR STORING, RETRIEVING, ACCESSING, RETAINING, AND DISPOSING OF RECORDS IN THE SYSTEM:**

**STORAGE:**

The records are maintained in file folders and on lists and forms.

**RETRIEVABILITY:**

These records are retrieved by name and by Social Security Number.

**SAFEGUARDS:**

When not in use by an authorized person, the records are stored in lockable file cabinets or in secured rooms. Information is released only to authorized officials on a need-to-know basis.

**RETENTION AND DISPOSAL:**

Records in this system are to be retained for 4 years similar to the contractor requirements of FPR 1–20.301–2(a).

**SYSTEM MANAGER(S) AND ADDRESS:**

Personnel officer of the department or agency where a subject individual was last employed.

**NOTIFICATION PROCEDURES:**

Individuals wishing to inquire whether this system of records contains information about them should contact the contracting officer or personnel officer at the agency where the individual was last employed. Individuals must furnish the following information for their records to be located and identified: Full name and the department of agency and component at which previously employed.

**RECORD ACCESS PROCEDURES:**

Individuals wishing to request access to their records should contact the contracting officer or personnel officer where the individual was last employed. Individuals must furnish their full name and department or agency and component with which employed in order for their records to be located and identified.

**CONTESTING RECORD PROCEDURES:**

Individuals wishing to request amendment of their records should contact the department or agency contracting officer or personnel officer at the activity where they were last employed. Individuals must furnish their full name and the name of their last employing agency, including duty station.

**RECORD SOURCE CATEGORIES:**

Information in this system is provided by the personnel office, contracting officer, and finance officer of the department or agency where the individual was last employed and from the commercial activites contractor.

Dated: February 2, 1983.

**William A. Crinkscales,**

*Director of Oversight.*

[FR Doc. 83-3687 Filed 2-9-83; 8:45 am]

BILLING CODE 6820-34-M

## DEPARTMENT OF HEALTH AND HUMAN SERVICES

### Alcohol, Drug Abuse, and Mental Health Administration

### Drug Abuse Epidemiology, Prevention, and Services Research Review Committee; Cancellation

The following meeting announced in the **Federal Register** Volume No. 48, Number 23, published February 2, 1983, page 4736 has been cancelled: Drug Abuse Epidemiology, Prevention, and Services Research Review Committee scheduled to meet February 17-18 at the Parklawn Building, 5600 Fishers lane, Rockville, Maryland 20857.

Dated February 4, 1983.

**Sue Simons,**

*Committee Management Officer, Alcohol, Drug Abuse, and Mental Health Administration.*

[FR Doc. 83-3563 Filed 2-9-83; 8:45 am]

BILLING CODE 4160-20-M

### Health Care Financing Administration

### Medicare and Medicaid Programs; Rural Health Clinic Payment Limits and Productivity Screening Guidelines; Correction

**AGENCY:** Health Care Financing Administration (HCFA), HHS.

**ACTION:** Correction of final notice.

**SUMMARY:** This document corrects a technical error that appeared in the final notice, published in the **Federal Register** on December 1, 1982, that established revised productivity screening guidelines and a revised upper limit on Medicare and Medicaid rates of payment for rural health clinic services furnished by independent rural health clinics. That notice contained an incorrect effective date of January 3, 1983. This document corrects that date to January 1, 1983.

**FOR FURTHER INFORMATION CONTACT:** Bernard Truffer, 301-597-1369.

**SUPPLEMENTARY INFORMATION:** On December 1, 1982, we published in the **Federal Register** (47 FR 54163) a final notice on rural health clinic payment limits and productivity screening guidelines. In that document, we erroneously stated that the new productivity guideline, the elimination of the overhead screening guidelines, and the revised payment limit were effective for cost reporting periods beginning on or after January 3, 1983. This document corrects that error by changing the effective date for the revisions in the rural health clinic productivity screening guidelines and payment limits to cost reporting periods beginning on or after January 1, 1983.

FR Doc. 82-32265, "Medicare and Medicaid Programs; Rural Health Clinic Payment Limits and Productivity Screening Guidelines," appearing at 47 FR 54163, December 1, 1982 is corrected as follows:

1. On page 54164, column 1, line 4, "January 3, 1983" is corrected to read "January 1, 1983".

2. On page 54164, column 2, line 59, "January 3, 1983" is corrected to read "January 1, 1983".

3. On page 54168, column 1, second paragraph of section 7, last line, "January 3, 1983" is corrected to read "January 1, 1983".

(Secs. 1102, 1833, 1861(aa), 1871, 1902(a), and 1905(a) of the Social Security Act (42 U.S.C. 1302, 1395l, 1395x(aa), 1395hh, 1396a(a), and 1396d(a))]

(Catalog of Federal Domestic Assistance Program No. 13.774, Medicare Supplemental Medical Insurance; No. 13.761, Medical Assistance Program)

Dated: February 4, 1983.

**Carolyne K. Davis,**

*Administrator, Health Care Financing Administration.*

[FR Doc. 83-3694 Filed 2-9-83; 8:45 am]

BILLING CODE 4120-03-M

### Health Resources and Services Administration

### National Council on Health Planning and Development; Rechartering

Pursuant to the Federal Advisory Committee Act, Pub. L. 92-463, (5 U.S.C. Appendix I), the Health Resources and Services Administration announces the rechartering by the Secretary, HHS, on January 28, 1983, of the following advisory Council:

*Council and Termination Date*

National Council on Health Planning and Development; Continuing.

Authority for this Council is continuing and a Charter will be filed no later than January 4, 1985, in accordance with section 14(b)(2) of Pub. L. 92-463.

Dated: February 4, 1983.

**Jackie E. Baum,**

*Advisory Committee Management Officer, HRSA.*

[FR Doc. 83-3565 Filed 2-9-83; 8:45 am]

BILLING CODE 4110-83-M

### Public Health Service

### Centers for Disease Control; Statement of Organization, Functions, and Delegations of Authority

Part H, Chapter HC (Centers for Disease Control) of the Statement of Organization, Functions, and Delegations of Authority of the Department of Health and Human Services (45 FR 67772-67776, dated October 14, 1980, and corrected at 45 FR 69296, October 20, 1980, as amended most recently at 47 FR 46142-46144, October 15, 1982) is amended to reflect the abolishment of the Division of Hepatitis and Viral Enteritis (Phoenix, Arizona) within the Center for Infectious Diseases, Centers for Disease Control. The functions are being transferred from Phoenix, Arizona, to Atlanta, Georgia, and are being consolidated with the following organizational components within the Center for Infectious Diseases: Division of Viral Diseases, Hospital Infectious Program, Office of Administrative Services, and Office of Scientific Services. The functional statements for these organizational components are sufficiently broad to encompass the functions being transferred and therefore are unchanged.

Section HC-B *Organization and Functions*, is hereby amended as follows:

Under the heading *Center for Infectious Diseases (HCR)*, delete the title and statement in its entirety for the *Division of Hepatitis and Viral Enteritis (HCRV).*

Dated: February 3, 1983.

**Richard S. Schweiker,**

*Secretary*

[FR Doc. 83-3582 Filed 2-9-83; 8:45 am]

BILLING CODE 4160-18-M

## DEPARTMENT OF THE INTERIOR

### Bureau of Indian Affairs

### Final Determination for Federal Acknowledgement of Narragansett Indian Tribe of Rhode Island

February 2, 1983.

This notice is published in the exercise of authority delegated by the

Secretary of the Interior to the Assistant Secretary—Indian Affairs by 209 DM 8.

Pursuant to 25 CFR 83.9(h) notice is hereby given that the Assistant Secretary acknowledges that the Narragansett Indian Tribe, c/o Mr. George Watson, Route 2, Charlestown, Rhode Island 02813, exists as an Indian tribe. This notice is based on a determination that the group satisfies the criteria set forth in 25 CFR 83.7.

The Narragansett Indian Tribe is the modern successor of the Narragansett and Niantic tribes which, in aboriginal times, inhabited the area which is today the state of Rhode Island. Members of the tribe are lineal descendants of the aboriginal Niantic and Narragansett Indians. The Narragansetts, once a large and powerful tribe, and the smaller Niantics, were culturally very similar and generally closely allied in historic times. Political structure was organized around leaders, referred to as sachems, who were drawn from high-ranking families.

Evidence indicates that the Narragansett community and its predecessors have existed autonomously since first contact, despite undergoing many modifications. A series of leaders and then tribal councils represented the tribe or its predecessors in its dealings with outside organizations and governmental bodies. These leaders and councils both responded to and influenced the group in matters of importance.

The tribe has a documented history dating from 1614. It was dealt with as an independent nation after 1622 by England and the Rhode Island colony. The Niantics and Narragansetts came increasingly under the authority of the English Crown in the 17th century, and its size and influence decreased steadily. After the Narragansett nation was essentially destroyed in 1675 in King Philip's War, the Niantics combined with the remnants of the Narragansetts. The tribe was placed under a form of guardianship by the colony of Rhode Island in 1709, a relationship which continued until 1880, when the state legislature of Rhode Island enacted a so-called "detribalization" act. This ended the state's relationship with the tribe except for retention of two acres surrounding the Narragansett Indian church which continued to be held in special status.

After 1880, there continued to be a Narragansett community on or near the former state reservation in southern Rhode Island. There continued to be both identified leaders who had standing as community leaders and, for some periods, a tribal council. The Narragansett Church organization was an important focus of community organization in this period. In 1934, the group created a new formal organization, which was incorporated under the state of Rhode Island. The state again effectively recognized the group beginning in 1934.

No evidence was found that members of the group are members of any other Indian tribes or that the group or its members have been forbidden the Federal relationship by an Act of Congress.

Essentially all of the current membership are believed to be able to trace to at least one ancestor on the membership lists of the Narragansett community prepared after the 1880 Rhode Island "detribalization" act. Most members are in fact expected to be able to trace to several ancestors. These lists are source documents currently used to determine eligibility for membership.

Proposed findings that the Narragansett Indian Tribe exists as an Indian tribe were published on page 35347 of the **Federal Register** on August 13, 1982. Interested parties were given 120 days in which to submit factual and legal arguments to rebut the evidence used to support the findings that the Narragansett Indian tribe exists as an Indian tribe. During this period only two comments were received, both opposing the findings and both from the same party. This individual expressed the opinion that the Narragansetts could not meet a blood degree requirement. While eligiblity for benefits under some Federal statutes is limited to tribal members with a certain blood degree, and the right of non-tribal Indians to organize is limited to those with ½ or more degree Indian blood, Federal law imposes no general blood degree requirement for tribal membership. Moreover, under the Federal regulations for determining eligibility as a tribe, a blood quantum requirement is not included in the criteria. While blood degree may be some evidence of social and cultural cohesion and maintenance of tribal relations, it is more definitely not conclusive as to the existence of tribal relations. Accordingly, the opinions submitted were given limited consideration. The findings focused instead on the larger and more important question of maintenance of tribal relations. No factual evidence not already considered was provided in these comments, and they were considered to have no effect on the findings of fact and the decision to recommend the tribe for Federal acknowledgment.

The determination is final and will become effective 60 days from the date of publication, unless the Secretary of the Interior requests the determination to be reconsidered pursuant to 25 CFR 83.10.

**John. W. Fritz,**

*Acting Assistant Secretary—Indian Affairs.*

[FR Doc. 83-3560 Filed 2-9-83; 8:45 am]

BILLING CODE 4310-02-M

## Information Collection Submitted for Review

January 7, 1983.

The proposal for the collection of information listed below has been submitted to the Office of Management and Budget for approval under the provisions of the Paperwork Reduction Act (44 U.S.C. Chapter 35). Copies of the proposed information may be obtained by contacting the Bureau's clearance officer at the phone number listed below. Comments and suggestions on the requirement should be made directly to the Bureau clearance officer and the Office of Management and Budget reviewing official, Mr. Rick Otis, at 202-395-7340.

Title: 25 CFR, Part 27, Vocational Training for Adult Indians.

Bureau Form Numbers: BIA-8205, SF-26, SF-30.

Frequency: On occasion.

Description of Respondents: Indians seeking vocational training.

Annual Responses: 46,945.

Annual Burden Hours: 12,010.

Bureau Clearance Officer: Diana Loper, (202) 343-3574.

**John W. Fritz,**

*Acting Assistant Secretary Indian Affairs.*

[FR Doc. 83-3583 Filed 2-9-83; 8:45 am]

BILLING CODE 4310-02-M

## Information Collection Submitted for Review

January 7, 1983.

The proposal for the collection of information listed below has been submitted to the Office of Management and Budget for approval under the provisions of the Paperwork Reduction Act (44 U.S.C. Chapter 35). Copies of the proposed information collection requirement and related forms and explanatory material may be obtained by contacting the Bureau's clearance officer at the phone number listed below. Comments and suggestions on the requirement should be made directly to the Bureau clearance officer and the Office of Management and Budget reviewing official, Mr. Rick Otis, at 202-395-7340.

Title: 25 CFR, Part 26, Employment Assistance for Adult Indians.

Bureau Form Number: None.

Frequency: On occasion.
Description of Respondents: Indians seeking employment assistance.
Annual Responses: 18,625.
Annual Burden Hours: 11,812.
Bureau Clearance Officer: Diana Loper, (202) 343- 3574.

**John W. Fritz,**

*Assistant Secretary, Indian Affairs.*

[FR Doc. 83-3584 Filed 2-9-83; 8:45 am]

BILLING CODE 4310-02-M

## Receipt of Designated Tribal Agents for Service

January 28, 1983.

This notice is published in exercise of authority delegated by the Secretary of the Interior to the Assistant Secretary, Indian Affairs by 209 DM 8.

The Indian Child Welfare Act of 1978 provides that Indian tribes may designate an agent for service of notice of proceedings under the Indian Child Welfare Act, 25 CFR Part 23 Subpart B, other than the tribal chairman. The Secretary of the Interior shall publish in the **Federal Register** on an annual basis the names and addresses of the designated agents.

This is the third list of Designated Tribal Agents for service of notice, and includes the listing of designated tribal agents received by the Secretary of the Interior prior to the date of this publication. Those groups noted with an asterisk are not federally recognized tribes.

KANA, President, Director of Social Services and Director of Health, Native Village of Akhiok, P.O. Box 172, Kodiak, AK 99615, (907) 486-5725.

Cheyenne—Arapaho Tribes of Oklahoma, P.O. Box 38, Concho, OK 73022, Mr. Winnifred E. White Tail.

Cheyenne River Sioux Tribe, South Dakota, Eagle Butte, SD 57625, Ms. Patty Pearman, (605) 964-6602.

Chilkat Indian Village of Klukwan, Klukwan, AK, James H. Stevens, Sr., Chairman.

Chilkoot Indian Association of Haines, Haines, AK 99827, Mr. Charles R. Paddock, Sr.

Cocopah Tribe of Arizona, P.O. Box G, Somerton, AZ 85350, Gregory D. Yuma, Tribal Court Coordinator, (602) 627-2061/2102.

Confederated Tribes of the Colville Reservation, Washington, P.O. Box 50, Nespelem, WA 99155, Al Aubertin, Chairman.

Confederated Tribes of the Warm Springs Reservation of Oregon, Merritt E. Youngdeer, Superintendent, War Springs, OR 97761.

Crow Creek Sioux Tribe, South Dakota, Fort Thompson, SD 57339, (1) Ms. Winifred Boub (605) 245-2311, (2) Mr. Ambrose McBride (605) 245-2221.

Craig Community Association, Craig, AK 99921, Thomas H. Abel, President.

Delaware Tribe of Western Oklahoma, P.O. Box 825, Anadarko, OK 73005, Edgar L. French, President, (405) 247-2448.

Devils Lake Sioux Tribe, North Dakota, Ft. Totten, ND 58335, Dan Dubois, Chairman, (701) 766-4221.

English Bay Village Council, Homer, Alaska.*

(1) The North Pacific Rim, 903 West Northern Lights Blvd., Suite 203, Anchorage, AK 99503, (907) 276-2121.

(2) English Bay Village Council, English Bay VIA, Homer, AK 99603, Vincent Kvasnifoff, President, (907) 235-8292.

Eyak Village Council, Eyak Native Village, P.O. Box 878, Cordova, AK 99574, Agnes Nichols, Eyak Village President, (907) 424-3619.

Fort Sill Apache Tribe of Oklahoma, Rte. 2, Box 121, Apache, OK 73006, Mildred I. Cleghorn, Chairperson.

Gila River Pima-Maricopa Indian Community of the Gila River Indian Reservation of Arizona, P.O. Box 427, Sacaton, AZ 85247.

Goshute Business Council, Confederated Tribes of the Goshute Reservation, Nevada and Utah, Ibapah, UT 84034, Dan Murphy, Chairman.

Hopi Tribal Court, Hopi Tribe of Arizona, P.O. Box 156, Keams Canyon, AZ 86034, Linda Suetopka, Clerk of the Court.

Hoonah Indian Association, Central Council, Tlingit and Haida Indian Tribes of Alaska, Sealaska Plaza, Suite 200, Juneau, AK 99801.

Chief Tribal Judge, Jicarilla Apache Tribal Court, Jicarilla Apache Tribe, New Mexico, P.O. Box 221, Dulce, NM 87528, (505) 759-3366.

Ketchikan Indian Corporation, Westina Cowan, KIC Social Worker, P.O. Box 6885, 429 Deermount Avenue, Ketchikan, AK 99901.

Klawock Cooperative Association, Klawock, AK 99925, Donald Marvin, President.

Kodiak Alaska—Natives of Kodiak, Inc.,* KANA, President, Director of Social Services and Director of Health, P.O. Box 172, Kodiak, AK 99615, (907) 486-5725.

Lower Brule Sioux Tribe, South Dakota, Lower Brule, SD 57548, Rose McCauley, Juvenile Probation Officer, (605) 473-5528.

Mescalero Apache Tribe of New Mexico, Mescalero Apache Agency, Mescalero, NM 88340, Wendell Chino, President.

Metlakatla Indian Community, P.O. Box 8, Metlakatla, AK 99926, Frieda Haldane, Juvenile Probation Officer, (907) 886-4021.

Mt. Marathon Native Association,* Seward, AK.

(1) North Pacific Rim, 903 West Northern Lights Blvd., Suite 203, Anchorage, AK 99503, (907) 276-2121.

(2) Mt. Marathon Native Association, P.O. Box 1457, Seward, AK 99664, (907) 224-3666.

Pueblo of Nambe, New Mexico, Route 1, Santa Fe, NM 87501, Ms. Karen Quintana, (505) 455-7692.

Navajo Tribal Council, Navajo Tribe of Arizona, Division of Social Welfare, Window Rock, AZ 86515, (602) 871-4595.

Oglala Sioux Tribal Council, Oglala Sioux Tribe of the Pine Ridge Reservation, South Dakota, Pine Ridge, SD 57770, Joe American Horse, Chairman.

Omaha Tribal Council, Omaha Tribe of Nebraska, P.O. Box 143, Macy, NE 68039, Elmer Blackbird, Chairman.

Organized Village of Kake, Kake, AK 99830, Henry Smith, President.

Native Village of Ouzinkie, KANA, President, Director of Social Services and Director of Health, P.O. Box 172, Kodiak, AK 99615, (907) 486-5725.

Papago Tribe of Arizona, Papago Children's Court, P.O. Box 813, Sells, AZ 85634, Ned Norris, Jr., Judge.

Pawnee Business Council, Pawnee Indian Tribe of Oklahoma, P.O. Box 470, Pawnee, OK 74058, Delbert Horsechief, President, (918) 762-3624.

Petersburg Indian Association, P.O. Box 1128, Petersburg, AK 99833, Richard Kito, President.

Pueblo of Picuris, New Mexico, P.O. Box 228, Penasco, NM 87553, Mary Louise Keesing, Pueblo Tribal Secretary, (505) 587-2519.

Ponca Tribe of Oklahoma, P.O. Box 2, White Eagle, Ponca City, OK 74601, Stacey E. Buffalohead, Chairman.

Port Graham Village Council, Port Graham Village, Homer, AK.

(1) North Pacific Rim, 903 West Northern Lights Blvd., Suite 203, Anchorage, AK 99503, (907) 276-2121.

(2) Walter Maganack, Sr., Village President, Port Graham VIA, Homer, AK 99603, (907) 433-8001.

Port Lions Tribal Council, Native Village of Port Lions, KANA, President, Director of Social Services and Director of Health, P.O. Box 172, Kodiak, AK 99615, (907) 486-5725.

Pueblo of Acoma, New Mexico, P.O. Box 347, Pueblo of Acoma, NM 87034, Bonnie Martinez, Tribal Court Clerk, (505) 552-6632.

Pueblo of San Felipe, New Mexico, P.O. Box 308, Algodones, NM 87001, Ms. Jeanette Trancosa, (505) 867-2439.

Puyallup Nation Health Authority, Puyallup Tribe of Washington, 2209 East 32nd Street, Tacoma, WA 98404, Rod Smith, Executive Director, (206) 597-6380.

Quechan Tribe of the Fort Yuma Reservation, California, P.O. Box 1352, Yuma, AZ 85364, Isadore Quahlupe, Vice-President, (714) 572-0213.

Ramah Navajo Family Service Center,* Ramah Navajo School Board, Inc., P.O. Box Drawer 1—Pine Hill CPO, Pine Hill, NM 87321, Beverly J. Coho, Director of Social Services, Vivian Hailstorm, MSW, Social Worker, Cecelia S. Ensrude, Child Legal Advocate, (505) 783-5011.

Rosebud Sioux Tribe of South Dakota, Rosebud, SD 57570, Elizabeth Garriott, Tribal Social Services.

Pueblo of San Ildefonso, New Mexico, Rte. 5 Box 315-A, Santa Fe, NM 87501, P. Bert Naranjo, Tribal Judge, (505) 455-2273.

Pueblo of San Juan, New Mexico, P.O. Box 1099, San Juan Pueblo, NM 87566, Mr. Johnny Abeyta, (505) 852-4400.

Pueblo of Santa Clara, New Mexico.

(1) Honorable Frankie V. Gutierrez, Tribal Judge,
(2) Ms. Pasqualita Frenier, Director of Social Services Program,
(3) Mr. Joseph Abeyta, Sr., Social Services,
P.O. Box 580,
Espanola, NM 87532,
(505) 753-7326.

Santee Sioux Tribal Council, Santee Sioux Tribe of Nebraska, Niobrara, NE 68760, Richard Kitto, Chairman.

Sauk-Suiattle Indian Tribe of Washington, 4229 76th Street, N.E., Marysville, WA 98270, Jean Fish, Chairman.

Sault Ste. Marie Tribe of Chippewa Indians of Michigan.

(1) Joseph K. Lumsden, Tribal Chairman, 206 Greenough Street, Sault Ste. Marie, MI 49783.
(2) Martha Snyder, Social Worker, P.O. Box 432, Manistique, MI 49854.
(3) Ms. Kathy Fike, 206 Greenough Street, Sault Ste. Marie, MI 49783.

Siletz Tribal Council, Confederated Tribes of the Siletz Reservation, Oregon, P.O. Box 670, Siletz, OR 97380, Arthur S. Bensell, Tribal Chairman.

Sisseton-Wahpeton Sioux Tribe of the Lake Traverse Reservation, South Dakota, Title II and Tribal Court, Sisseton, SD 57262.

Sitka Community Association, P.O. Box 4360, Mt. Edgecumbe, AK 99835, Andrew Hope III, SCA President, (907) 747-3207.

Skokomish Indian Tribe of Washington, Rte. 5, Box 432, Shelton, WA 98584, James Byrd, Sr., Chairman, (206) 877-5113.

Standing Rock Sioux Tribe of the Standing Rock Reservation, North and South Dakota, Health, Education, and Welfare Committee, Fort Yates, ND 58538.

Tatitlek Village Council, Native Villag of Tatitlek.

(1) North Pacific Rim, 903 West Northern Lights Blvd., Suite 203, Anchorage, AK 99503, (907) 276-2121.
(2) Gary Kompkoff, President, Tatitlek Village Council, General Delivery, Tatitlek, AK 99677, (907) 257-8001.

Western Shoshone Social Services Program, Te-Moak Band of Western Shoshone Indians of Nevada, 1545 Silver Eagle Road, Elko, NV 89801, robert Yablunksy, Program Director, (702) 738-9251.

Pueblo of Tesuque, New Mexico, Rte. 1, Box 1, Santa Fe, NM 87501, Mr. Louis Hena, (505) 983-2667.

Saxman IRA Council, Organized Village of Saxman, P.O. Box 8198, Ketchikan, AK 99901, Richard Shelds, President, (907) 225-4166.

Fort Hall Tribal Court, Shoshone-Bannock Tribes of the Fort Hall Reservation of Idaho, P.O. Box 306, Fort Hall, ID 83203, (208) 238-3904.

Child Welfare Worker, Child Welfare Program, Three Affiliated Tribes of the Fort Berthold Reservation, North Dakota, New Town, ND 58748, Austin Gillette, Chairman.

Hydaburg Council, Hydaburg Cooperative Association, Hydaburg, AK 99922, Mr. Sylvester Peele, Sr.

Kasaan Council, Organized Village of Kasaan, Kasaan, AK, Louis A. Thompson, President.

Turtle Mountain Band of Chippewa Indians, Belcourt, ND 58316, Richard La Fromboise, Chairman, (707) 477-6121.

Valdez Native Association, Valdez, Alaska.*

(1) North Pacific Rim, 903 West Northern Lights Blvd., Ste. 203, Anchorage, AK 99503, (907) 276-2121.
(2) Helen Dunlap, President, Valdez Native Association, P.O. Box 1108, Valdez, AK 99686, (907) 835-4951.

Administrative Manager, White Mountain Apache Tribe of the Fort Apache Reservation, Arizona, P.O. Box 700, White River, AZ 85941, (602) 338-4346.

Wichita Indian Tribe of Oklahoma, P.O. Box 729, Anadarko, OK 73005, Newton Lamar, President, (405) 247-2425.

Winnebago Children's Court, Winnebago Tribe of Nebraska, Winnebago, NE 68071, Ms. Donna Vandell.

Wrangell Cooperative Association,* P.O. Box 868, Wrangell, AK 99929, Margaret Sturdevant, President.

Yakutat, Inc.,* Yakutat, AK 99689, Henry Porter, President.

Yankton Sioux Tribe of South Dakota, Greenwood, SD 57380, Larry Cournoyer, Chairman, (605) 384-3691.

**John W. Fritz,**

*Acting Assistant Secretary—Indian Affairs.*

[FR Doc. 83-3648 Filed 2-9-83; 8:45 am]

BILLING CODE 4310-02-M

## Moapa Band of Paiutes, Nevada; Amendment to Ordinance No. VII

October 25, 1982.

This Notice is published in accordance with authority delegated by the Secretary of the Interior to the Assistant Secretary—Indian Affairs by 209 DM 8, and in accordance with the Act of August 15, 1953, 67 Stat. 586, 18 U.S.C. 1161. I certify that Resolution No. 75-M-9(1) amending Ordinance No. VII, relating to the application of the Federal Indian Liquor Laws on the Moapa Indian Reservation, Nevada, was duly adopted on September 17, 1975, by the Moapa Business Council which has jurisdiction over the area of Indian country included in the ordinance, reading as follows:

**John W. Fritz,**

*Acting Assistant Secretary—Indian Affairs.*

### Amendment to Ordinance No. VII; Moapa Band of Paiutes, Arizona

Whereas, in conjuction with the retail outlet of the Tribally owned Leather Shop, plans have been made to open a fast service grocery store, and

Whereas, the sale of alcoholic beverages would not be inconsistent with such an operation, and, more to the point, would enhance the success of such a store,

Now therefore be it resolved, Ordinance No. VII, adopted on April 22, 1970, be revised and amended to read as follows:

*Section 1.* The sale of all alcoholic beverages is lawful provided it is by a Tribally operated enterprise or by special temporary permission of the Moapa Business Council to groups or individuals.

*Section 2.* No person shall sell, give away or otherwise furnish intoxicating beverages to any persons under the age of twenty-one (21) years, or leave or deposit any such intoxicating beverages in any place with the intent that same shall be procured by any person under the age of twenty-one (21) years.

*Section 3.* Intoxicating beverages will not be consumed by any person in any public building, grounds or roads within the exterior boundaries of the Moapa River Indian Reservation.

*Penalty.* Any Indian who violates any of the provisions of this ordinance shall be deemed guilty of an offense, and upon conviction thereof shall be punished by a fine and/or sentence to imprisonment to be determined by the discretion of the court.

When any provision of this ordinance is violated by a non-Indian, he shall be referred to the State and/or Federal authorities for prosecution under applicable laws.

**Certification**

It is hereby certified that the above resolution was passed by a quorum of 4 members of the Moapa Business Council at a meeting held on the *17th* day of September, 1975, by a vote of *4* for and *0* against.

Dalton Tom,
*Secretary.*
Preston Tom,
*Chairman.*

[FR Doc. 83-3649 Filed 2-9-83; 8:45 am]
BILLING CODE 4310-02-M

## Bureau of Land Management

**[Serial No. I-18297]**

### Idaho; Conveyance of Public Lands, Clark County

February 1, 1983.

Notice is hereby given that pursuant to the Act of October 21, 1976 (90 Stat. 2750; 43 U.S.C. 1713), a patent was issued to Francis H. Cabot and William E. Anderson II, as the Idaho Company, a partnership, for the following-described public land:

**Boise Meridian, Idaho**

T. 9 N., R. 36 E.,
Sec. 21, NE¼NW¼;
Sec. 32, NW¼SW¼.
Containing 80.00 acres.

The purpose of this notice is to inform the public and interested State and local governmental officials of the conveyance.

**Louis B. Bellesi,**
*Deputy State Director for Operations.*

[FR Doc. 83-3585 Filed 2-9-83; 8:45 am]
BILLING CODE 4310-84-M

**[NM 55217]**

### New Mexico; Legal Notice

February 1, 1983.

Department of the Interior, Bureau of Land Management, Santa Fe, New Mexico. Pursuant to coal exploration license application NM 55217, members of the public are invited to participate with Dorado Energy Group, Inc., on a pro rata cost sharing basis, in a program for the exploration of coal deposits owned by the United States of America. The lands covered by this application are located in Catron and Cibola Counties, New Mexico, and lie within the general area described below. This exploration is in the nature of a reconnaissance of the region, and hole sites cannot be determined in advance due to the inadequacy of present exploration data. As specific drill hole sites are determined prior approval will be obtained from the authorized officer of the Bureau of Land Management.

T. 2 N., R. 15 W., N. Mex. Prin. Mer., New Mexico
Sections 6, 7, 18, 19 and 30.
T. 3 N., R. 15 W., N. Mex. Prin. Mer., New Mexico
Sections 18, 19, 30 and 31.
T. 4 N., R. 15 W., N. Mex. Prin. Mer., New Mexico
Sections 7, 18, 19, 30 and 31.
T. 2 N., R. 16 W., N. Mex. Prin. Mer., New Mexico
Sections 1, 3, through 15, 17 through 35.
T. 3 N., R. 16 W., N. Mex. Prin. Mer., New Mexico
Sections 4 through 9, 13 through 15, 17 through 31, 33, 34 and 35.
T. 4 N., R. 16 W., N. Mex. Prin. Mer., New Mexico
Sections 1, 3, 4, 6 through 15, 18, 19, 21 through 27, 31 and 35.
T. 2 N., R. 17 W., N. Mex. Prin. Mer., New Mexico
Sections 1, 3, 4, 10 through 13, 24 and 25.
T. 3 N., R. 17 W., N. Mex. Prin. Mer., New Mexico
Sections 1, 3, 6, 7, 8, 12, 14, 15, 17, 20 through 28, 33 through 35.
T. 4 N., R. 17 W., N. Mex. Prin. Mer., New Mexico
Sections 3 through 11, 13, through 15, 17 through 24, 28 through 31 and 33.
T. 4 N., R. 18 W., N. Mex. Prin. Mer., New Mexico
Sections 1, 3 through 15, 17 through 20, 22 through 31, 33 through 35.

Any party electing to participate in this exploration program shall notify in writing, both the State Director, Bureau of Land Management, P.O. Box 1449, Santa Fe, New Mexico 87501 and Dorado Energy Group, Inc., 8757 East Monterosa Street, Scottsdale, Arizona 85251. Such written notice must be received no later than 30 calendar days after publication of this notice in the **Federal Register.**

This proposed exploration program is for the purpose of determining the quality and quantity of the coal in the area and is fully described and will be conducted pursuant to an exploration plan to be approved by the Bureau of Land Management. A copy of the exploration plan as submitted by Dorado Energy Group Inc., may be examined at the Bureau of Land Management State Office, Room 3031, Joseph M. Montoya Federal Building and U.S. Post Office, South Federal Place, Santa Fe, New Mexico, and the Minerals Management Service, 411 N. Auburn Avenue, Farmington, New Mexico.

**Charles W. Luscher,**
*State Director.*

[FR Doc. 83-3587 Filed 2-9-83; 8:45 am]
BILLING CODE 4310-84-M

**[Serial No. A 17000-Z]**

### Arizona; Classification of Public Lands for State Indemnity Selection

1. The Arizona State Land Department has filed a letter of intent to acquire and a petition for classification and application to acquire the lands described in Paragraph 5 below, under the provisions of the Act of June 20, 1910 (36 Stat. 557), as amended, in lieu of certain school lands that were encumbered by other rights or reservations before the State's title could attach. This application has been assigned the serial number A 17000-Z.

2. The Bureau of Land Management will examine these lands for evidence of prior valid rights or other statutory constraints that would bar transfer. Those lands found suitable for transfer will be held to be classified 60 days from date of publication of this notice in the **Federal Register.** Classification is pursuant to Title 43 Code of Federal Regulations, Subpart 2400 and Section 7 of the Act of June 28, 1934.

3. Information concerning these lands and the proposed transfer to the State of Arizona may be obtained from the District Manager, Phoenix District Office, Bureau of Land Management, 2929 West Clarendon Avenue, Phoenix, Arizona 85017 (602-241-2930).

4. For a period of 60 days from the date of publication of this notice in the **Federal Register,** all persons who wish to submit comments on the above classification may present their views in writing for consideration to the Phoenix District Manager, Bureau of Land Management, 2929 West Clarendon Avenue, Phoenix, Arizona 85017. As provided by Title 43 Code of Federal Regulations, Subpart 2462.1, a public hearing will be scheduled by the District Manager if he determines that sufficient public interest exists to warrant the time and expanse of a hearing.

5. The lands included in this classification are located in Maricopa, Pima, Yuma, and Yavapai Counties, Arizona and are described as follows

(footnotes correspond to numbered authorized users or applicants listed in Paragraph 6):

**Gila & Salt River Meridian, Arizona**

T. 3 N., R. 6 E,
Sec. 1: Lots 9, 10, 11.[1, 2, 3, 4]
Approximately 41.80 acres.

T. 4 N., R. 1 E,
Sec. 12: W1/2W1/2SW1/4NW1/4;
Sec. 23: W1/2NW1/4NW1/4SE1/4, N1/2SW1/4NW1/4SE1/4.[5]
Approximately 20.00 acres.

T. 5 N., R. 2 E,
Sec. 35: S1/2SW1/4NW1/4NW1/4.[39]
Approximately 5.00 acres.

T. 2 N., R. 3 W,
Sec. 5: Lots 2, 3, 4, SW1/4NE1/4, S1/2NW1/4, SE1/4, W1/2SE1/4.[40]
Sec. 6: Lots 1, 2, 3, 4, 5, SE1/4NE1/4, E1/2SE1/4.[40]
Sec. 7: Lots 1, 2, 3, 4, E1/2E1/2[40]
Sec. 8: W1/2, W1/2E1/2.[40]
Sec. 27: SW1/4SW1/4.[40]
Sec. 28: SE1/4SE1/4.[40]
Sec. 33: E1/2NE1/4.[40]
Sec. 34: Lot 2, S1/2NE1/4, W1/2NW1/4, SE1/4NW1/4, N1/2SW1/4.[6, 40]
Sec. 35: Lots 3, 4, W1/2NW1/4NE1/4, S1/2NE1/4, NE1/4NW1/4, E1/2NW1/4NW1/4, S1/2NW1/4, NE1/4NE1/4SW1/4, N1/2SE1/4.[6, 40]
Approximately 2,451.04 acres.

T. 2 N., R. 4 W,
Sec. 1: Lots 1, 2, 3, 4, S1/2N1/2, S1/2[41]
Sec. 3: Lots 1, 2, 3, 4, S1/2N1/2, S1/2.[7, 19, 41]
Sec. 10: NE1/4.[7, 19, 41]
Sec. 11: A11.[7, 19, 41]
Sec. 12: A11.[41]
Approximately 2,722.04 acres.

T. 2 N., R. 1 W.,
Sec. 13: NE¼, NE¼SE¼; [2, 8, 42]
Sec. 25: NW¼NE¼.[2, 8, 42]
Approximately 240.00 acres.

T. 3 N., R. 1 W.,
Sec. 24: W½NE¼NE¼SE¼, W½NE¼SE¼, W½W½SE¼NE¼SE¼.[2, 5, 8]
Approximately 107.50 acres.

T. 3 N., R. 4 W.,
Sec. 2: E½E½; [20]
Sec. 9: E½; [20, 43]
Sec. 10: All; [20, 44]
Sec. 11: W½, W½E½, W½E½E½; [20, 43]
Sec. 14: W½W½E½, W½E½E½, E½E½SE¼, E½SE¼NE¼; [20, 29, 44]
Sec. 15: All; [20, 29, 43]
Sec. 16: E½; [20, 29]
Sec. 21: E½: [19, 30, 43]
Sec. 22: All; [19, 30, 44]
Sec. 23: All; [19, 30, 31, 44]
Sec. 24: S½NW¼, SW¼;[44]
Sec. 25: NW¼, N½SW¼, SW¼SW¼; [44]
Sec. 26: All; [19, 44]
Sec. 27: All; [19, 44]
Sec. 28: E½; [19, 44]
Sec. 33: Lots 3, 4, NE¼, N½SE¼; [7, 19, 43]
Sec. 34: Lots 1, 2, 3, 4, N½, N½S½; [19, 44]
Sec. 35: Lots 1, 2, 3, 4, N½, N½S½; [19, 44]
Sec. 36: W½NW¼, S½.
Approximately 8,938.70 acres.

T. 4 N., R. 1 W.,
Sec. 13: SW¼SE¼; [5, 21, 45]
Approximately 40.00 acres.

T. 1 S., R. 2 W.,
Sec. 4: SE¼SE¼; [22, 40]
Sec. 9: NE¼NE¼, S½NE¼, S½SW¼, SE¼; [5, 22, 40]
Sec. 10: All; [22, 40]
Sec. 11: All; [22, 40]
Sec. 14: All; [2, 5, 8, 9, 10, 11, 22, 40]
Sec. 15: All; [22, 40]
Sec. 22: SW¼; [22, 40]
Sec. 27: W½NE¼, NW¼; [2, 5, 9, 10, 11, 22, 40]
Sec. 28: All; [2, 5, 10, 11, 22, 40]
Sec. 29: All; [22, 40]
Sec. 30: NW¼NW¼NE¼, S½N½NE¼, SW¼NE¼, E½NW¼, SE¼SE¼; [3, 5, 12, 22, 40]
Sec. 33: N½N½;[5, 22, 40]
Approximately 5,170.00 acres.

T. 8 N., R. 2 E
Sec. 9: SE¼NE¼ less P.M.S. 3743, SE¼; [23, 24, 32, 33, 34, 35, 38]
Sec. 10: NE¼ NW¼NW¼ less R&PP lease, S½NW¼NW¼, SW¼NW¼, E½W½, W½E½, E½SE¼; [3, 5, 7, 9, 13, 14, 15, 23, 24, 36]
Sec. 11: S½SW¼; [25]
Sec. 14: W½NW¼; [25]
Sec. 15: NE¼ east of I–17, E½NW¼.[3, 7, 9, 15, 25]
Approximately 1,010.00 acres.

T. 19 S., R. 13 E.,
Sec. 6: E½SW¼, SE¼; [16, 26, 37, 46]
Sec. 7: SE¼NW¼, SE¼SW¼.[26, 37, 46]
Approximately 280.00 acres.

T. 14 N., R. 2 W.,
Sec. 34: Tract C.[3, 15, 17]
Approximately 14.61 acres.

T. 15 N., R. 2 W.,
Sec. 12: SW¼SW¼.[18, 27]
Approximately 40.00 acres.

T. 6 S., R. 14 W.,
Sec. 1: Lots 1, 2, 3, 4, S½N½, S½; [28]
Sec. 12: All.
Approximately 1,283.62 acres.

Application A 17000–Z totals approximately 22,364.31 acres.

6. The following listed corporations, agencies, and individuals are holders of or applicants for leases, withdrawals, permits, and/or rights-of-way on the public lands described in Paragraph 5 above:

**Withdrawals**

[1] Bureau of Reclamation, Lower Colorado Projects Office, P.O. Box 427, Boulder City, Nevada 89005, Order, 3/17/52.

**Rights-of-Way**

[2] Salt River Project, P.O. Box 1980, Phoenix, Arizona 85001, AR 032264, A 6635, A 10350.

[3] Mountain States Telephone, R/W Department, room 806–A 3033 North Third Street, Phoenix, Arizona 85012 A 5419, A 7335, A 6273, A 904, A 10150, A 10337.

[4] Maricopa County Highway Dept., 3325 West Durango Street, Phoenix, Arizona 85009, A 17599.

[5] Arizona Public Service, P.O. Box 21666, Sta. 3172, Phoenix, Arizona 85036, AR 018990–A, A 4459, A 6693, A 7731, A 8532, A 8926, A 10350, A 14641, A 16125, A 7220, A 4585, A 6014.

[6] Arizona Water Resources Commission, 222 North Central Avenue, Phoenix, Arizona 85004, AR 03774.

[7] Bureau of Reclamation, Arizona Projects Office, 2200 Valley Bank Center, Phoenix, Arizona 85073, PHX 080582, PHX 085401.

[8] Tucson Electric Power Company, P.O. Box 711, Tucson, Arizona 85702, A7274, A 7731, A 7872.

[9] El Paso Gas Company, P.O. Box 1492, El Paso, Texas 79978, PHX 083799, AR 010913, AR 017553.

[10] Public Service Company of New Mexico, P.O. Box 2267, Albuquerque, New Mexico 87103, A 10350.

[11] El Paso Electric Company, P.O. Box 982, El Paso, Texas 79999, A 10350.

[12] James H. & Georgia K. Mantis, Box 605, Buckeye, Arizona 85326, A 12375.

[13] Jack W. Blanchard, 2140 West Shady Glen, Phoenix, Arizona 85023, A 13119.

[14] Yavapai County Board of Supervisors, Courthouse, Prescott, Arizona 86301, A 543.

[15] Arizona Department of Transportation, 206 South 17th Avenue, Phoenix, Arizona 85007, A 9589, AR 034191, AR 030988, AR 032656, PHX 084389, PHX 084077, PHX 083280.

[16] Trico Electric Company, Box 35970, Tucson Arizona 85740, AR 011059.

[17] Veterans Administration, Office of Construction, Washington, D.C. 20420, A 7818.

[18] Atchison, Topeka & Santa Fe Railroad, One Santa Fe Plaza, 5200 East Sheila Street, Los Angeles, California 90040, PHX 086539.

**Grazing Leases**

[19] Ted Hazen, Box 54, Star Route, Buckeye, Arizona 85326.

[20] Charles A. Miccia, P.O. Box 768, Gila Bend, Arizona 85337.

[21] Larry & Fern Rose, P.O. Box 293, Peoria, Arizona 85345.

[22] Loren De Rosier, Route 1, Box 106, Buckeye, Arizona 85326.

[23] Jack Harman, Rock Springs Store, Box 2000, Black Canyon Stage, Phoenix, Arizona 85029.

[24] William T. & Alberta P. Booth, P.O. Box 472, Black Canyon City, Arizona 85324.

[25] John Vanderwey, Vanderwey Ranches, 2241 E. Colter Street, Phoenix, Arizona 85016.

[26] Marley Cattle Company, P.O. Box 6632, Phoenix, Arizona 85005.

[27] Douglas and Nancy Bard, Campwood Route, Prescott, Arizona 86301.

[28] Jojoba Plantation Products, Inc., 515 South Figueroa Street, Los Angeles, California 90071.

**Range Improvements**

[29] 0605; Fence; Charles Miccia.
[30] 0605; Fence; Ted Hazen.
[31] 1343; Fence; Ted Hazen.
[32] 0604; Fence; Jack Harman.
[33] 1286; Fence; Jack Harman.
[34] 0047; Fence; William T. Booth.
[35] 2052; Fence; William T. Booth.
[36] 2060; Fence; Jack Harman.
[37] 1915; Fence; Marley Cattle Company.

**Cooperative Agreements**

[38] 1286; Fence; William T. Booth.

**Oil & Gas Leases**

[39] Petro American, Inc., 817 Seventeenth Street, Suite 616, Denver, Colorado 80202, A12937.

[40] Columbia Gas Development Corp., P.O. Box 1350, Houston, Texas 77001, A 12645, A 12646, A 12647, A 12648, A 12649, A 12654, A 12655, A 12657, A 12658.

[41] Emerald Oil Company, 1570 C.S.B. Tower, 50 South Main, Salt Lake City, Utah 84101, A 14232.

[42] Mormac Oil and Gas, Suite 100, Mormac Bldg., 321 Texan Trail, Corpus Christi, Texas 78411 and Tipperary Oil and Gas Corp., P.O. Box 3179, Midland, Texas 79702, A 11194.

[43] AMAREX, Inc., Box 1678, Oklahoma City, Oklahoma 73101, A 14093.

[44] First Mississippi Corp., P.O. Box 1249, Jackson, Mississippi 39205, A 14234, A 14235.

[45] American Quasar Petroleum Co. of New Mexico, Suite 707, 1700 Broadway, Denver, Colorado 80290, A 12800.

[46] Jan L. Aldrich, Box 2541, Lawton, Oklahoma 73502, A 17756.

7. Rights-of-way granted by BLM will transfer with the land. Oil and gas leases will remain in effect under the terms and conditions of the lease. State Law and State Land Department procedures (R 12-5-154 D Administrative Rules and Regulations, Arizona State Land Department) provide for the offering to holders of BLM grazing permits the first right to lease lands that are transferred to the state. This constitutes official notice to grazing leassees that their Bureau of Land Management leases will be terminated in part upon transfer of the land to the State of Arizona.

Dated: February 3, 1983.

**William K. Barker,**

*District Manager.*

[FR Doc. 83-3650 Filed 2-9-83; 8:45 am]

BILLING CODE 4310-84-M

---

**[M 55662]**

## Montana; Conveyance of Public Lands, Garfield County

February 3, 1983.

Notice is hereby given that, pursuant to the Act of October 21, 1976 (90 Stat. 2743, 2756; 43 U.S.C. 1701, 1716), the following public land was conveyed to L. B. Binion and Teddy Jane Binion in exchange for other lands and/or interests in lands:

**Principal Meridian, Montana**

T. 20 N., R. 38 E.,
Sec. 11, N½ and SE¼; and
Sec. 12, N½ and SW¼.

T. 21 N., R. 38 E.,
Sec. 23, W½NE¼, W½ and SE¼;
Sec. 25, S½NE¼, NW¼SW¼, S½SW¼, and SE¼;
Sec. 26, W½NE¼, W½ and SE¼;
Sec. 32, E½NW¼NW¼ and SW¼SE¼; and
Sec. 35, N½, N½S½, and SW¼SW¼.

T. 18 N., R. 39 E.,
Sec. 1, Lots 1, 2, 3, and 4, S½N½, and S½;
Sec. 3, S½SE¼;
Sec. 4, Lot 3, S½NW¼ and W½SW¼;
Sec. 5, Lots 1, 2, and 3, S½NE¼, SE¼NW¼, and S½;
Sec. 6, SE¼SW¼ and SE¼;
Sec. 7, E½NE¼ and N½NE¼SE¼;
Sec. 8, N½ and N½N½S½;
Sec. 10, NE¼;
Sec. 11, W½NE¼ and NW¼; and
Sec. 12, NW¼NW¼ and N½SW¼NW¼.

T. 19 N., R. 39 E.,
Sec. 27, NW¼SW¼;
Sec. 28, S½;
Sec. 31, NW¼SW¼, SE¼SW¼, and S½SE¼;
Sec. 32, S½NW¼ and SW¼;
Sec. 33, W½NW¼, N½SW¼, and SE¼SW¼; and
Sec. 35, NE¼SE¼.

T. 20 N., R. 39 E.,
Sec. 6, Lots 6 and 7; and
Sec. 7, Lots 1 and 2.

T. 21 N., R. 39 E.,
Sec. 17, SW¼SW¼;
Sec. 18, Lots 3 and 4, E½SE¼;
Sec. 19, NE¼SW¼ and SE¼SE¼;
Sec. 20, S½SW¼;
Sec. 21, SE¼SW¼;
Sec. 29, W½, W½SE¼, and SE¼SE¼;
Sec. 30, Lots 2, 3, and 4, E½, SE¼NW¼, and E½SW¼;
Sec. 31, Lots 1, 2, 3, and 4, E½, and E½W½;
Sec. 32, N½ and NW¼SW¼; and
Sec. 33, N½NW¼ and SW¼NW¼.

T. 19 N., R. 40 E.,
Sec. 1, Lot 1, S½NE¼ and SE¼.

T. 20 N., R. 40 E.,
Sec. 12, SE¼NW¼, E½SW¼, and SE¼;
Sec. 13, W½NE¼, E½NW¼, and SE¼;
Sec. 26, E½;
Sec. 34, All; and
Sec. 35, All.

T. 19 N., R. 41 E.,
Sec. 6, Lots 1, 2, 3, 4, and 5.

T. 20 N., R. 41 E.,
Sec. 7, Lots 3 and 4, E½SW¼ and W½SE¼;
Sec. 18, Lots 1, 2, and 3, E½NW¼ and NE¼SW¼; and
Sec. 31, Lot 4, SE¼SW¼ and S½SE¼.

The areas described aggregate 12,590.27 acres.

The purpose of the Notice is to inform the public and interested state and local governmental officials of the issuance of a conveyance document to the Binions.

**Edgar D. Stark,**

*Chief, Lands Adjudication Section.*

[FR Doc. 83-3651 Filed 2-9-83; 8:45 am]

BILLING CODE 4310-84-M

---

## Garfield County, Colo.; Environmental Impact Statement, Scoping Meetings

**AGENCY:** Bureau of Land Management, Interior.

**ACTION:** Notice of intent to hold scoping meetings and prepare an environmental impact statement.

**SUMMARY:** The U.S. Department of the Interior, Bureau of Land Management, Grand Junction District Office will prepare an environmental impact statement (EIS) which addresses two separate proposed shale oil projects in Garfield County, Colorado.

### Purpose of This Announcement

This announcement is to inform the public that both the Mobil and the Pacific shale oil projects will be addressed in an Environmental Impact Statement, and that Public Scoping Meetings will be held to identify issues concerning the projects.

### Background to This Annoucement

Mobil Oil Corporation ("Mobil") on November 11, 1981 requested a right-of-way across public lands for the development of a water reservoir on Main Elk Creek. On April 21, 1982, Mobil also requested the purchase or exchange of lands abuting their properties ("Wheeler Gulch") which would be affected by the Parachute Shale Oil Project. The two requests are related in that water from the Main Elk Creek Project is proposed as a possible source of water for the Parachute Shale Oil Project. The requested land actions constitute a major federal action requiring an EIS.

In order to comply with the National Environmental Policy Act (NEPA) in an effective manner, the BLM proposed to combine the Mobil EIS with the NEPA review for other shale oil projects, amenable to site-specific review and needing BLM land authorization.

On Wednesday, July 7, 1982 a notice was published in the **Federal Register**, pages 29606 and 29607 which requested interested parties to contact the Grand Junction District of the Bureau of Land Management. Those companies interested in participating were requested to submit a letter of intent and a project description with a status report.

On September 9, 1982 the Grand Junction District received a letter from the Standard Oil Company (SOHIO) that confirmed the intent of the Pacific Shale Project, a joint venture of Sohio Shale Oil Company, Superior Oil Company and Cliffs Oil Shale Corporation (collectively "Pacific") to proceed with an shale oil project that would involve a right-of-way across and the purchase of, or trade for, public lands administered by BLM. The letter indicated their commitment to becoming a party to a joint EIS review.

### Proposed Action

The general project descriptions provided to date are as follows:

*Mobil*

The Mobil Oil Corporation proposes to develop a 100,000 barrel per day shale

oil facility, known as the Parachute Shale Oil Project, to be located on private land in Garfield County, Colorado.

The Parachute Project will include underground mining; underground and surface crushing; surface shale oil retorting, spent shale disposal and shale oil upgrading facilities. The primary source of water will be a reservoir on Main Elk Creek. Ancillary facilities will include a syncrude pipeline, electric powerline, access roads, a funicular railroad, and a buried utility corridor.

*Pacific*

The Pacific Shale Project also proposes a 100,000 barrel per day shale oil facility on private land in Garfield County, Colorado. Some of the support systems proposed for the project will extend into Mesa County. The Pacific Shale Project will include underground mining and underground support facilities such as offices, shops, warehousing, electrical substations and a crushing station. The water system will include intake facilities on the Colorado River and water treatment plants and water storage at the project site. Transportation will include a syncrude pipeline, electric powerline and roads. Surface retorting, spent shale disposal and shale oil upgrading will be included in the project.

**Alternatives Including the Proposed Action**

The EIS will contain an identification of possible alternatives, including Mobil's and Pacific's proposed action and a no-action alternative. Other alternatives will include alternate mining methods, processing methods and locations, alternate pipeline routes, and alternate transportation routes.

Other alternatives may be developed through the scoping process for the three phases (construction, operation, and abandonment). The scoping process will be open and all reasonable alternative proposals will given serious consideration.

All identified alternatives will be considered; however, some alternatives may not be pursued further after scoping. Those alternatives that have minimal potential environmental consequences, have obvious flaws that preclude their availability, or are unreasonably expensive will only be discussed briefly in the EIS. After a short description, including the reason why the alternative is not considered sound, it will not be considered further. Only those alternatives that are practically possible, are reasonably available, and merit further consideration in their own right will be analyzed in depth in the EIS.

**Scoping Process**

In accordance with the final regulations of the Council on Environmental Quality for Implementation of Procedureal Provisions of the National Environmental Policy Act (40 CFR, Part 1500) the scoping meetings will:

a. Inform affected federal, state and local agencies, and other interested groups or individuals about the proposal.

b. Define the scope and significant issues to be analyzed in the EIS. This includes indentification and elimination from detailed study those issues which are not significant.

c. Identify environmental reports which may be related to the proposal or may contain relevant data.

d. Identify related consultation and review requirements which will be addressed in the EIS, including identification of mandated documentation.

**Scoping Meetings**

Scoping meetings will be held March 21 to March 25, 1983 at the following times and locations.

March 21—Rifle, Colorado, 7:00 p.m., Rifle High School Cafeteria

March 22—DeBeque, Colorado, 7:00 p.m., DeBeque School Multipurpose Room

March 23—Grand Junction, Colorado, 7:00 p.m., Grand Junction High School Cafeteria.

March 24—Denver, Colorado, 7:00 p.m., Ramada Foothills, Winchester Room

March 25—Denver, Colorado, Agency Scoping, 9:00 a.m., Ramada Foothills, Winchester Room

For further information contact: Phillip L. Neal, EIS Team Leader, Mobil-Pacific Oil Shale EIS, Bureau of Land Management, 764 Horizon Drive, Grand Junction, Colorado 81501. Telephone: Commercial—303-243-6552; FTS—323-0011.

**Lee Lauritzen,**

*Acting District Manager.*

[FR Doc. 83-3652 Filed 2-9-83; 8:45 am]

BILLING CODE 4310-84-M

## Utah; Combined Hydrocarbon; Regional Environmental Impact Statement (EIS)

**AGENCY:** Bureau of Land Management (BLM), Interior.

**ACTION:** Notice of Intent to prepare an Environmental Impact Statement and Notice of Public Scoping Meetings.

**SUMMARY:** This twofold notice is to first announce the intent of the Bureau of Land Management to prepare an environmental impact statement (EIS) covering potential combined hydrocarbon (tar sand) development in Utah. The EIS will cover (1) potential oil production levels from eleven special tar sand areas (STSAs) in Utah, (2) potential leasing of scattered parcels in STSAs located in Duchesne, Carbon, Energy, Wayne, and Garfield Counties in Utah, (3) oil and gas leasing categories within the eleven STSAs. An initial Notice of Intent appeared in the July 16, 1982, **Federal Register.**

The second purpose of this notice is to advise the public that issue identification and scoping meetings for the combined hydrocarbon regional EIS will be held at the following dates and locations:

**March 8, 1983**

Vernal District Office, Bureau of Land Management, 170 South 500 East, Vernal, Utah

**March 9, 1983**

Price Resource Area Office, Bureau of Land Management, 900 North 7th East, Price, Utah

**March 15, 1983**

Utah State Office, Bureau of Land Management, University Club Building, 136 East South Temple, 13th Floor Conference Room, Salt Lake City, Utah

All meetings are scheduled from 4 p.m. to 7 p.m. and will have an open house format. The purpose of the meeting is threefold: (1) to inform the public of the nature of the combined hydrocarbon leasing and conversion program; (2) to gather resource information from the public; and (3) to consider concerns, problems, and or issues important to the public that could realistically be addressed in the EIS.

The general issues appear to include: air quality, scenic and water quality, water use, transportation development and socioeconomics.

The comment period on issues will end April 15, 1983. Written comments will be accepted at, and additional information can be obtained from: Bureau of Land Management, Alan Partridge, Team Leader, 150 East 900 North, Richfield, Utah 84701, (801) 896-8221.

Dated: February 4, 1983.

**Roland G. Robison,**

*Utah State Director.*

[FR Doc. 83-3653 Filed 2-9-83; 8:45 am]

BILLING CODE 4310-84-M

---

[M-56116A]

## Montana; Realty Action, Exchange; Correction

In **Federal Register** Document No. 83-1954 appearing on pages 3419 and 3420, dated January 25, 1983, make the following corrections:

1. Page 3419, column one, the last sentence Sec. 1: SE¼NE½, SE¼NW¼ should read Sec. 1: SE¼NE¼, SE¼NW¼.

2. Page 3419, column one, after the last sentence add the following legal descriptions:

T. 12 N., R. 13 E.
Sec. 6: Lot 5
T. 16 N., R. 11 E.
Sec. 19: NW¼SE¼
T. 18 N., R. 11 E.
Sec. 15: NW¼NW¼

3. Page 3419, the last sentence of column two, "Aggregating 4,682.36 acres of public land" should read "Aggregating 4,787.27 acres of public land."

4. Page 3420, column one, third paragraph, "3. All valid existing rights (e.g. rights-of-way, easements, and lease or record)" should read "3. All valid existing rights (e.g. rights-of-way, easements, and leases of record)."

**Glenn Freeman,**

*District Manager.*

[FR Doc. 83-3654 Filed 2-9-83; 8:45 am]

BILLING CODE 4310-84-M

---

[A-7154]

## Arizona; Realty Action, Competitive Sale of Public Land in Cochise County

The following described land has been identified as suitable for disposal under Section 203 of the Federal Land Policy and Management Act of 1976 (90 Stat. 2750, 43 U.S.C. 1713), at no less than the appraised fair market value.

GILA AND SALT RIVER MERIDIAN

[T. 13 S., R. 19 E.]

| Parcel | Legal description | Acreage | Value |
|---|---|---|---|
| 1 | Sec. 1, lot 4 | 40.18 | $19,000 |
| 2 | Sec. 1, SE¼NW¼ | 40.00 | 19,000 |
| 3 | Sec. 1, NW¼SW¼ | 40.00 | 17,000 |
| 4 | Sec. 1, NE¼SE¼, E½SE¼ | 120.00 | 45,000 |
| 5 | Sec. 12, E½NW¼ | 80.00 | 32,000 |

The above land aggregates 320.18 acres. Cochise County has zoned these lands as suitable for Resource Production Lands (life-support activities). The land will be sold at public auction by competitive bidding. The sale will be held Thursday, April 28, 1983 at 2:00 p.m., Mountain Standard Time, at the Justice of the Peace Courtroom, Cochise County Service Center, located at Highway 80 and Seventh Street, Benson, Arizona.

Bidding information and Instructions: The Federal Land Policy and Management Act requires that bidders must be citizens of the United States, 18 years of age or over, or, in the case of a corporation, be subject to the laws of any state of the United States. Bids may be made by a principal (the one desiring to purchase the land) or his duly qualified agent. Agents will be required to submit proof of power of attorney.

*Method of Bidding:* Each bid must be for all the land in a specified parcel, and for no less than the appraised fair market value. Bids may be made either by submitting sealed bids until three days before the sale date or by bidding orally at the sale. Bids sent by mail will only be considered if received by the Bureau of Land Management, Safford District Office, 425 East Fourth Street, Safford, Arizona 85546, prior to 4:00 p.m., Mountain Standard Time, Monday, April 25, 1983. Sealed bids, accompanied by a certified check, postal money order, bank draft, or cashier's check made payable to the Bureau of Land Management for not less than one-fifth of the amount of the bid must be in a separate sealed envelope, within the transmittal envelope. The sealed envelopes must be marked in the lower lefthand corner, "Sealed Bid, Parcel ———, Public Land Sale A-7154 Sale to be held April 28, 1983." All sealed bids will be opened at 2:00 p.m. on the day of sale.

Oral bids will be received immediately after all sealed bids have been opened and the highest sealed bid is announced. The highest sealed bid will be the base for oral bids. If the highest bid is an oral bid, the successful bidder will be required to pay immediately one-fifth of the high bid price by cash, personal check, money order, bank draft, or any combination of these. Each oral bid must be in increments not less than fifty dollars.

The successful oral bidder is required to pay one-fifth of the bid immediately at the sale by any of the above forms of payment, or combination of, including a personal check. A successful bidder must submit the remainder of the full b price at the time of sale or within thirty (30) days after receipt of the Bureau's decision accepting the highest bid. If final payment is not received within th specified 30 days, the high bid is rejected, the deposit is forfeited, and th parcel offered to the second highest bidder, subject ot the same terms and conditions. All unsuccessful sealed bid will be returned within 30 days of the sale.

Patents for the land, when issued, wi contain the following reservations to th United States:

1. A right-of-way thereon for ditches and canals constructed by the authority of the United States, Act of August 30, 1890 26 Stat. 391; 43 U.S.C. 945.

2. All minerals shall be reserved to th United States.

It will be the responsibility of the successful bidder to review and/or ascertain:

1. The Federal Emergency Management Agency (FEMA) 100 year floodplain maps that may affect the area, and the Cochise County Planning and Zoning Commission regarding floo hazard potential of these lands.

2. The clarification of the rightful owner and the location of the fenceline on or near the north boundary of Sectio 1 Lot 4 T. 13 S., R. 19 E. GSRM, Arizona

Publication of the notice will segregate the subject lands from all appropriations under public laws, including the mining laws, but not the mineral leasing laws. This segregration will terminate upon the issuance of a patent or two years from the date of thi Notice, or upon publication of a Notice of Termination.

Detailed information concerning the sale can be obtained from the Safford District Office. For a period of 45 days from the date of this Notice, interested parties may submit comments to the District Manager, Safford District Offic Any adverse comments will be evaluated by the District Manager who may vacate or modify this Realty Action, and issue a final determination. In the absence of any action by the District Manager, this Realty Action wi become the final determination of the Department of the Interior.

Dated: February 4, 1983.

**Lester K. Rosenkrance,**

*District Manager.*

[FR Doc. 83-3655 Filed 2-9-83; 8:45 am]

BILLING CODE 4310-84-M

UNITED STATES 4310-MR
DEPARTMENT OF THE INTERIOR
Minerals Management Service
Outer Continental Shelf--Norton Basin
Oil and Gas Lease Sale No. 57

1. Authority: This notice is published pursuant to the Outer Continental Shelf Lands Act of 1953 (43 U.S.C. 1331-1343), as amended (92 Stat. 629), and the regulations issued thereunder (30 CFR Part 256, formerly 43 CFR Part 3300; see the Federal Register of October 22, 1982, at 47 FR 47006). A revision of those regulations appeared in the Federal Register of June 16, 1982, at 47 FR 26031 and 25967.

2. Filing of Bids: Sealed bids will be received by the Regional Manager, Alaska Outer Continental Shelf (OCS) Region, 620 East 10th Avenue, P.O. Box 1159, Anchorage, Alaska 99510. Bids may be delivered, either by mail or in person, to the above address until 4:30 p.m., March 14, 1983; or by personal delivery to the Howard Rock Ballroom, Sheraton Anchorage Hotel, 401 East 6th Ave., Anchorage, Alaska, between the hours of 8:30 a.m., a.h.s.t., and 9:30 a.m., a.h.s.t., March 15, 1983. Bids received by the Regional Manager later than the times and dates specified above will be returned unopened to the bidders. Bids may not be modified or withdrawn unless written modification or withdrawal is received by the Regional Manager prior to 9:30 a.m., a.h.s.t., March 15, 1983. All bids must be submitted and will be considered in accordance with applicable regulations, including 30 CFR Part 256. The list of restricted joint bidders which applies to this sale was published in the Federal Register on October 6, 1982, at 47 FR 44166.

3. Method of Bidding: A separate bid in a sealed envelope, labeled "Sealed Bid for Oil and Gas Lease (insert number of tract), not to be opened until 10 a.m., a.h.s.t., March 15, 1983," must be submitted for each tract. A suggested bid form appears in 30 CFR Part 256, Appendix A. Bidders are advised that tract numbers are assigned solely for administrative purposes and are not the same as block numbers found on official protraction diagrams. All bids received shall be deemed submitted for a numbered tract. Bidders must submit with each bid one-fifth of the cash bonus in cash or by cashier's check, bank draft, or certified check payable to the order of the Minerals Management Service. No bid for less than a full tract as described in paragraph 12 will be considered. Bidders submitting joint bids must state on the bid form the proportionate interest of each participating bidder, in percent to no more than five decimal places after the decimal point, e.g., 50.12345 percent. The previous requirement for a joint bidder's statement has been rescinded by the latest revision of regulations at 30 CFR 256 (see paragraph 1, above). Other documents may be required of bidders under 30 CFR 256.46. Partnerships also need to submit a list of signatories authorized to bind the partnership in matters relating to OCS leasing, consistent with the partnership agreement. All documents must be executed in conformance with signatory authorizations on file. Bidders are warned against violation of 18 U.S.C. 1860, prohibiting unlawful combination or intimidation of bidders.

4. Bidding Systems: All leases awarded for this sale will provide for a yearly rental payment of $8 per hectare or fraction thereof, and a minimum royalty payment at an annual rate of $8 per hectare or fraction thereof. The following systems will be utilized:

(a) Bonus Bidding with a Fixed Sliding Scale Royalty. Bids on tracts 57-33, 57-34, 57-35, 57-36, 57-37, 57-38, 57-40, 57-41, 57-42, 57-43, 57-44, 57-45, 57-46, 57-47, 57-49, 57-50, 57-51, 57-52, 57-53, 57-54, 57-55, 57-56, 57-58, 57-59, 57-60, 57-61, 57-62, 57-63, 57-64, 57-65, 57-66, 57-67, 57-68, 57-69, 57-70, 57-71, 57-72, 57-73, 57-74, 57-75, 57-76, 57-77, 57-78, 57-79, 57-80, 57-81, 57-82, 57-83, 57-84, 57-85, 57-86, 57-87, 57-88, 57-89, 57-90, 57-91, 57-92, 57-93, 57-94, 57-95, 57-96, 57-97, 57-98, 57-99, 57-100, 57-101, 57-102, 57-103, 57-104, 57-105, 57-106, 57-107, 57-108, 57-109, 57-110, 57-111, 57-112, 57-113, 57-114, 57-115, 57-116, 57-117, 57-118, 57-119, 57-120, 57-121, 57-122, 57-123, 57-124, 57-125, 57-126, 57-127, 57-128, 57-129, 57-130, 57-131, 57-132, 57-133, 57-134, 57-135, 57-136, 57-137, 57-138, 57-139, 57-140, 57-141, 57-142, 57-143, 57-144, 57-145, 57-146, 57-147, 57-148, 57-149, 57-150, 57-151, 57-152, 57-153, 57-154, 57-155, 57-156, 57-157, and 57-158 must be submitted on a cash bonus basis with the percent royalty due in amount or value of production fixed according to the sliding scale formula described below. This formula fixes the percent royalty at a level determined by the value of lease production during each calendar quarter. For purposes of determining the royalty percent due on production during a quarter, the value of production during the quarter will be adjusted for inflation as described below. The determination of the value of the production on which royalty is due will be made pursuant to 30 CFR 250.64.

The fixed sliding scale formula operates in the following way: when the quarterly value of production, adjusted for inflation, is less than or equal to $16.697566 million, a royalty of 12.50000 percent in amount or value of production will be due on the unadjusted value or amount of production. When the adjusted quarterly value of production is equal to or greater than $16.697567 million, but less than or equal to $11822.537759 million, the royalty percent due on the unadjusted value or amount of production is given by

$Rj = b[Ln (Vj/S)]$ where

$Rj$ = the percent royalty that is due and payable on the unadjusted amount or value of all production in quarter j

$b = 8.0$

Ln = natural logarithm

$Vj$ = the value of production in quarter j, adjusted for inflation, in millions of dollars

$S = 3.50$

When the adjusted quarterly value of production is equal to or greater than $11822.537760 million, a royalty of 65.00000 percent in amount or value of production will be due on the unadjusted quarterly value of production. Thus, in no instance will the quarterly royalty due exceed 65.00000 percent in amount or value of quarterly production.

In determining the quarterly percent royalty due, Rj, the calculation will be carried to five decimal places (for example, 18.56224 percent). This calculation will incorporate the adjusted quarterly value of production, Vj, in millions of dollars, rounded to the sixth digit, i.e., the nearest dollar (for example, 35.624831 millions of dollars).

Figure 1
Form of the Sliding Royalty Schedule

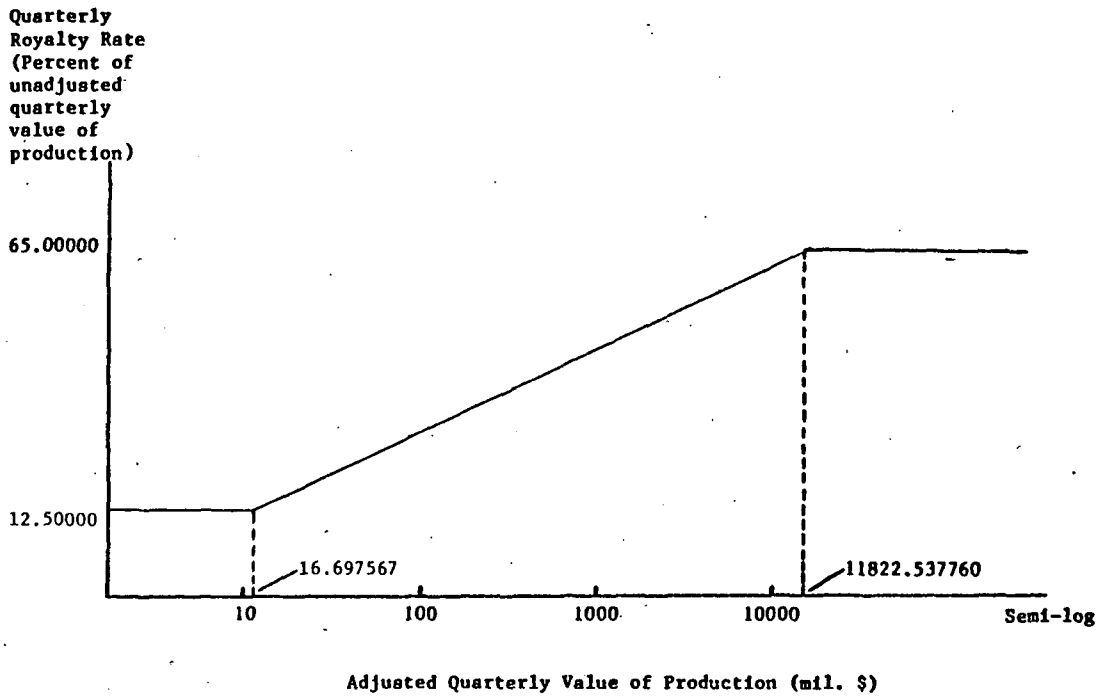


TABLE 1. HYPOTHETICAL QUARTERLY ROYALTY CALCULATIONS

| (A) Actual Value of Quarterly Production (Millions of Dollars) | (B) GNP Fixed Weighted Price Index | (C) Inflation Factor[1] | (D) Adjusted Value of Quarterly Production[2] (Vj, Millions of $) | (E) Percent Royalty Rate (Rj) | (F) Royalty Paymen (Millions of Dollars) |
|---|---|---|---|---|---|
| 10.000000 | 200.0 | 4/3 | 7.500000 | 12.50000 | 1.25000 |
| 30.000000 | 200.0 | 4/3 | 22.500000 | 14.88602 | 4.46581 |
| 90.000000 | 200.0 | 4/3 | 67.500000 | 23.67492 | 21.30743 |
| 270.000000 | 200.0 | 4/3 | 202.500000 | 32.46382 | 87.65231 |
| 810.000000 | 200.0 | 4/3 | 607.500000 | 41.25271 | 334.14695 |
| 10.000000 | 250.0 | 5/3 | 6.000000 | 12.50000 | 1.25000 |
| 30.000000 | 250.0 | 5/3 | 18.000000 | 13.10087 | 3.93026 |
| 90.000000 | 250.0 | 5/3 | 54.000000 | 21.88977 | 19.70079 |
| 270.000000 | 250.0 | 5/3 | 162.000000 | 30.67867 | 82.83241 |
| 810.000000 | 250.0 | 5/3 | 486.000000 | 39.46757 | 319.68732 |

1 Column (B) divided by 150.0 (assumed value of GNP fixed weighted price index at time leases are issued).

2 Column (A) divided by Inflation Factor.

3 Column (A) times Column (E) divided by 100. All values are rounded for display purposes only.

The form of the sliding scale royalty schedule is illustrated in Figure 1. Note that the effective quarterly royalty rate depends upon the inflation adjusted quarterly value of production. However, this rate is applied to the unadjusted quarterly value of production to determine the royalty payments due.

In adjusting the quarterly value of production for use in calculating the percent royalty due on production during the quarter, the actual value of production will be adjusted to account for the effects of inflation by dividing the actual value of production by the following inflation adjustment factor. The inflation adjustment factor used will be the ratio of the GNP fixed weighted price index for the calendar quarter preceding the quarter of production to the value of that index for the quarter preceding the issuance of the lease. The GNP fixed weighted price index is published monthly in the Survey of Current Business by the Bureau of Economic Analysis, U.S. Department of Commerce. The percent royalty will be due and payable on the actual amount or value of production as determined pursuant to 30 CFR 250.64. The timing of procedures for inflation adjustments and determinations of the royalty due will be specified at a later date. Table 1 provides hypothetical examples of quarterly royalty calculations using the sliding scale formula just described under two different values for the quarterly price index.

(b) Bonus Bidding with a 12-1/2 Percent Royalty. Bids on the remaining tracts to be offered at this sale must be submitted on a cash bonus basis with a fixed royalty of 12-1/2 percent.

5. Equal Opportunity: Each bidder must have submitted by 9:30 a.m., a.h.s.t., March 15, 1983, the certification required by 41 CFR 60-1.7(b) and Executive Order No. 11246 of September 24, 1965, as amended by Executive Order No. 11375 of October 13, 1967, on the Compliance Report Certification Form, Form 1140-8 (June 1982), and the Affirmative Action Representation Form, Form 1140-7 (June 1982). See item 14, "Information to Lessees."

6. Bid Opening: Bids will be opened on March 15, 1983, beginning at 10 a.m., a.h.s.t., at the second address stated in paragraph 2. The opening of the bids is for the sole purpose of publicly announcing bids received and no bids will be accepted or rejected at that time. If the Department is prohibited for any reason from opening any bid before midnight, March 15, 1983, that bid will be returned unopened to the bidder as soon thereafter as possible.

7. Deposit of Payment: Any cash, cashier's checks, certified checks, or bank drafts submitted with a bid may be deposited in a suspense account in the U.S. Treasury during the period the bids are being considered. Such a deposit does not constitute and shall not be construed as acceptance of any bid on behalf of the United States.

8. Withdrawal of Tracts: The United States reserves the right to withdraw any tract from this sale prior to issuance of a written acceptance of a bid for that tract.

9. Acceptance or Rejection of Bids: The United States reserves the right to reject any and all bids for any tract. In any case, no bid for any tract will be accepted and no lease for any tract will be awarded to any bidder unless:

a. The bidder has complied with all requirements of this notice and applicable regulations;

b. The bid is the highest valid cash bonus bid; and

c. The amount of the bid has been determined to be adequate by the Secretary of the Interior.

No bid will be considered for acceptance unless it provides for a cash bonus in the amount of $371 or more per hectare or fraction thereof. Any bid submitted which does not conform to the requirements of this notice of sale, the OCS Lands Act, as amended, or applicable regulations may be returned to the person submitting that bid by the Regional Manager and not considered for acceptance.

10. Successful Bidders: Each person who has submitted a bid accepted by the Secretary of the Interior will be required to execute copies of the lease specified below, pay the balance of the cash bonus bid together with the first year's annual rental and satisfy the bonding requirements of 30 CFR Subpart I within the time provided in 30 CFR 256.47. A modification of the payments procedure for successful bidders appears in the latest revision of 30 CFR 256 (see paragraph 1, above). These changes do not apply to the submission of the one-fifth bonus with bids, described in paragraph 3, above.

11. Protraction Diagrams: Tracts offered for lease may be located on the following official protraction diagrams which are available from the Regional Manager, Alaska Outer Continental Shelf Region, at the first address stated in paragraph 2, at a cost of $2 each.

a. Outer Continental Shelf Official Protraction Diagram NP 3-1, Norton Sound (approved December 13, 1976).

b. Outer Continental Shelf Official Protraction Diagram NP 3-2, St. Michael (approved December 13, 1976).

c. Outer Continental Shelf Official Protraction Diagram NQ 3-7, Nome (approved December 13, 1976).

d. Outer Continental Shelf Official Protraction Diagram NQ 3-8, Solomon (approved December 13, 1976).

12. Tract Descriptions: Note: There may be gaps in the numbers of the tracts listed. Some of the blocks identified in the final environmental impact statement may not be included in this notice.

The tracts offered for bid are as follows:

OCS OFFICIAL PROTRACTION DIAGRAM, NORTON SOUND NP 3-1
(Approved December 13, 1976)

| Tract | Block | Designation | Hectares |
|---|---|---|---|
| 57-1 | 25 | All | 2304.00 |
| 57-2 | 26 | All | 2304.00 |
| 57-3 | 27 | All | 2304.00 |
| 57-4 | 28 | All | 2304.00 |
| 57-5 | 29 | All | 2304.00 |
| 57-6 | 30 | All | 2304.00 |
| 57-7 | 31 | All | 2304.00 |
| 57-8 | 32 | All | 2304.00 |
| 57-9 | 71 | All | 2304.00 |
| 57-10 | 72 | All | 2304.00 |
| 57-11 | 73 | All | 2304.00 |
| 57-12 | 74 | All | 2304.00 |
| 57-13 | 75 | All | 2304.00 |
| 57-14 | 76 | All | 2304.00 |
| 57-15 | 115 | All | 2304.00 |
| 57-16 | 116 | All | 2304.00 |
| 57-17 | 117 | All | 2304.00 |
| 57-18 | 118 | All | 2304.00 |
| 57-19 | 119 | All | 2304.00 |
| 57-20 | 120 | All | 2304.00 |
| 57-21 | 159 | All | 2304.00 |
| 57-22 | 160 | All | 2304.00 |
| 57-23 | 161 | All | 2304.00 |
| 57-24 | 162 | All | 2304.00 |
| 57-25 | 163 | All | 2304.00 |
| 57-26 | 164 | All | 2304.00 |
| 57-27 | 203 | All | 2304.00 |
| 57-28 | 204 | All | 2304.00 |
| 57-29 | 205 | All | 2304.00 |
| 57-30 | 206 | All | 2304.00 |
| 57-31 | 207 | All | 2304.00 |
| 57-32 | 208 | All | 2304.00 |
| 57-33 | 245 | All | 2304.00 |
| 57-34 | 247 | All | 2304.00 |
| 57-35 | 248 | All | 2304.00 |
| 57-36 | 249 | All | 2304.00 |
| 57-37 | 250 | All | 2304.00 |
| 57-38 | 251 | All | 2304.00 |
| 57-39 | 252 | All | 2304.00 |
| 57-40 | 288 | All | 2304.00 |
| 57-41 | 289 | All | 2304.00 |
| 57-42 | 290 | All | 2304.00 |
| 57-43 | 291 | All | 2304.00 |

OCS OFFICIAL PROTRACTION DIAGRAM, NORTON SOUND NP 3-1
(Approved December 13, 1976)

| Tract | Block | Designation | Hectares |
|---|---|---|---|
| 57-44 | 292 | All | 2304.00 |
| 57-45 | 293 | All | 2304.00 |
| 57-46 | 294 | All | 2304.00 |
| 57-47 | 295 | All | 2304.00 |
| 57-48 | 296 | All | 2304.00 |
| 57-49 | 332 | All | 2304.00 |
| 57-50 | 333 | All | 2304.00 |
| 57-51 | 334 | All | 2304.00 |
| 57-52 | 335 | All | 2304.00 |
| 57-53 | 336 | All | 2304.00 |
| 57-54 | 337 | All | 2304.00 |
| 57-55 | 338 | All | 2304.00 |
| 57-56 | 339 | All | 2304.00 |
| 57-57 | 340 | All | 2304.00 |
| 57-58 | 375 | All | 2304.00 |
| 57-59 | 376 | All | 2304.00 |
| 57-60 | 377 | All | 2304.00 |
| 57-61 | 378 | All | 2304.00 |
| 57-62 | 379 | All | 2304.00 |
| 57-63 | 380 | All | 2304.00 |
| 57-64 | 381 | All | 2304.00 |
| 57-65 | 382 | All | 2304.00 |
| 57-66 | 383 | All | 2304.00 |
| 57-67 | 419 | All | 2304.00 |
| 57-68 | 420 | All | 2304.00 |
| 57-69 | 421 | All | 2304.00 |
| 57-70 | 422 | All | 2304.00 |
| 57-71 | 423 | All | 2304.00 |
| 57-72 | 424 | All | 2304.00 |
| 57-73 | 425 | All | 2304.00 |
| 57-74 | 426 | All | 2304.00 |
| 57-75 | 427 | All | 2304.00 |
| 57-76 | 464 | All | 2304.00 |
| 57-77 | 465 | All | 2304.00 |
| 57-78 | 466 | All | 2304.00 |
| 57-79 | 467 | All | 2304.00 |
| 57-80 | 468 | All | 2304.00 |
| 57-81 | 469 | All | 2304.00 |
| 57-82 | 470 | All | 2304.00 |
| 57-83 | 471 | All | 2304.00 |
| 57-84 | 499 | All | 2304.00 |
| 57-85 | 510 | All | 2304.00 |
| 57-86 | 511 | All | 2304.00 |

OCS OFFICIAL PROTRACTION DIAGRAM, NORTON SOUND NP 3-1
(Approved December 13, 1976)

| Tract | Block | Designation | Hectares |
|---|---|---|---|
| 57-87 | 512 | All | 2304.00 |
| 57-88 | 513 | All | 2304.00 |
| 57-89 | 514 | All | 2304.00 |
| 57-90 | 515 | All | 2304.00 |
| 57-91 | 543 | All | 2304.00 |
| 57-92 | 544 | All | 2304.00 |
| 57-93 | 545 | All | 2304.00 |
| 57-94 | 554 | All | 2304.00 |
| 57-95 | 555 | All | 2304.00 |
| 57-96 | 556 | All | 2304.00 |
| 57-97 | 557 | All | 2304.00 |
| 57-98 | 558 | All | 2304.00 |
| 57-99 | 559 | All | 2304.00 |
| 57-100 | 587 | All | 2304.00 |
| 57-101 | 588 | All | 2304.00 |
| 57-102 | 589 | All | 2304.00 |
| 57-103 | 597 | All | 2304.00 |
| 57-104 | 598 | All | 2304.00 |
| 57-105 | 599 | All | 2304.00 |
| 57-106 | 600 | All | 2304.00 |
| 57-107 | 601 | All | 2304.00 |
| 57-108 | 602 | All | 2304.00 |
| 57-109 | 603 | All | 2304.00 |
| 57-110 | 604 | All | 2304.00 |
| 57-111 | 631 | All | 2304.00 |
| 57-112 | 632 | All | 2304.00 |
| 57-113 | 633 | All | 2304.00 |
| 57-114 | 634 | All | 2304.00 |
| 57-115 | 635 | All | 2304.00 |
| 57-116 | 636 | All | 2304.00 |
| 57-117 | 640 | All | 2304.00 |
| 57-118 | 641 | All | 2304.00 |
| 57-119 | 642 | All | 2304.00 |
| 57-120 | 643 | All | 2304.00 |
| 57-121 | 644 | All | 2304.00 |
| 57-122 | 645 | All | 2304.00 |
| 57-123 | 646 | All | 2304.00 |
| 57-124 | 647 | All | 2304.00 |
| 57-125 | 675 | All | 2304.00 |
| 57-126 | 676 | All | 2304.00 |
| 57-127 | 678 | All | 2304.00 |
| 57-128 | 679 | All | 2304.00 |
| 57-129 | 680 | All | 2304.00 |

OCS OFFICIAL PROTRACTION DIAGRAM, NORTON SOUND NP 3-1
(Approved December 13, 1976)

| Tract | Block | Designation | Hectares |
|---|---|---|---|
| 57-130 | 681 | All | 2304.00 |
| 57-131 | 682 | All | 2304.00 |
| 57-132 | 684 | All | 2304.00 |
| 57-133 | 685 | All | 2304.00 |
| 57-134 | 686 | All | 2304.00 |
| 57-135 | 687 | All | 2304.00 |
| 57-136 | 688 | All | 2304.00 |
| 57-137 | 689 | All | 2304.00 |
| 57-138 | 690 | All | 2304.00 |
| 57-139 | 691 | All | 2304.00 |
| 57-140 | 722 | All | 2304.00 |
| 57-141 | 723 | All | 2304.00 |
| 57-142 | 724 | All | 2304.00 |
| 57-143 | 728 | All | 2304.00 |
| 57-144 | 729 | All | 2304.00 |
| 57-145 | 730 | All | 2304.00 |
| 57-146 | 731 | All | 2304.00 |
| 57-147 | 732 | All | 2304.00 |
| 57-148 | 733 | All | 2304.00 |
| 57-149 | 734 | All | 2304.00 |
| 57-150 | 735 | All | 2304.00 |
| 57-151 | 766 | All | 2304.00 |
| 57-152 | 767 | All | 2304.00 |
| 57-153 | 768 | All | 2304.00 |
| 57-154 | 772 | All | 2304.00 |
| 57-155 | 773 | All | 2304.00 |
| 57-156 | 774 | All | 2304.00 |
| 57-157 | 775 | All | 2304.00 |
| 57-158 | 776 | All | 2304.00 |

OCS OFFICIAL PROTRACTION DIAGRAM, ST. MICHAEL NP 3-2
(Approved December 13, 1976)

| Tract | Block | Designation | Hectares |
|---|---|---|---|
| 57-159 | 1 | All | 2304.00 |
| 57-160 | 2 | All | 2304.00 |
| 57-161 | 3 | All | 2304.00 |
| 57-162 | 4 | All | 2304.00 |
| 57-163 | 5 | All | 2304.00 |
| 57-164 | 6 | All | 2304.00 |
| 57-165 | 7 | All | 2304.00 |
| 57-166 | 8 | All | 2304.00 |
| 57-167 | 9 | All | 2304.00 |
| 57-168 | 10 | All | 2304.00 |
| 57-169 | 11 | All | 2304.00 |
| 57-170 | 12 | All | 2304.00 |
| 57-171 | 13 | All | 2304.00 |
| 57-172 | 14 | All | 2304.00 |
| 57-173 | 15 | All | 2304.00 |
| 57-174 | 16 | All | 2304.00 |
| 57-175 | 17 | All | 2304.00 |
| 57-176 | 45 | All | 2304.00 |
| 57-177 | 46 | All | 2304.00 |
| 57-178 | 47 | All | 2304.00 |
| 57-179 | 48 | All | 2304.00 |
| 57-180 | 49 | All | 2304.00 |
| 57-181 | 50 | All | 2304.00 |
| 57-182 | 51 | All | 2304.00 |
| 57-183 | 52 | All | 2304.00 |
| 57-184 | 53 | All | 2304.00 |
| 57-185 | 54 | All | 2304.00 |
| 57-186 | 55 | All | 2304.00 |
| 57-187 | 56 | All | 2304.00 |
| 57-188 | 57 | All | 2304.00 |
| 57-189 | 58 | All | 2304.00 |
| 57-190 | 59 | All | 2304.00 |
| 57-191 | 60 | All | 2304.00 |
| 57-192 | 61 | All | 2304.00 |
| 57-193 | 62 | All | 2304.00 |
| 57-194 | 89 | All | 2304.00 |
| 57-195 | 90 | All | 2304.00 |
| 57-196 | 91 | All | 2304.00 |
| 57-197 | 92 | All | 2304.00 |
| 57-198 | 93 | All | 2304.00 |
| 57-199 | 94 | All | 2304.00 |
| 57-200 | 95 | All | 2304.00 |
| 57-201 | 96 | All | 2304.00 |
| 57-202 | 97 | All | 2304.00 |

OCS OFFICIAL PROTRACTION DIAGRAM, ST. MICHAEL NP 3-2
(Approved December 13, 1976)

| Tract | Block | Designation | Hectares |
|---|---|---|---|
| 57-203 | 98 | All | 2304.00 |
| 57-204 | 99 | All | 2304.00 |
| 57-205 | 100 | All | 2304.00 |
| 57-206 | 101 | All | 2304.00 |
| 57-207 | 102 | All | 2304.00 |
| 57-208 | 103 | All | 2304.00 |
| 57-209 | 104 | All | 2304.00 |
| 57-210 | 105 | All | 2304.00 |
| 57-211 | 106 | All | 2304.00 |
| 57-212 | 133 | All | 2304.00 |
| 57-213 | 134 | All | 2304.00 |
| 57-214 | 135 | All | 2304.00 |
| 57-215 | 136 | All | 2304.00 |
| 57-216 | 137 | All | 2304.00 |
| 57-217 | 138 | All | 2304.00 |
| 57-218 | 139 | All | 2304.00 |
| 57-219 | 140 | All | 2304.00 |
| 57-220 | 141 | All | 2304.00 |
| 57-221 | 142 | All | 2304.00 |
| 57-222 | 143 | All | 2304.00 |
| 57-223 | 144 | All | 2304.00 |
| 57-224 | 145 | All | 2304.00 |
| 57-225 | 146 | All | 2304.00 |
| 57-226 | 147 | All | 2304.00 |
| 57-227 | 148 | All | 2304.00 |
| 57-228 | 149 | All | 2304.00 |
| 57-229 | 150 | All | 2304.00 |
| 57-230 | 177 | All | 2304.00 |
| 57-231 | 178 | All | 2304.00 |
| 57-232 | 179 | All | 2304.00 |
| 57-233 | 180 | All | 2304.00 |
| 57-234 | 181 | All | 2304.00 |
| 57-235 | 182 | All | 2304.00 |
| 57-236 | 183 | All | 2304.00 |
| 57-237 | 184 | All | 2304.00 |
| 57-238 | 185 | All | 2304.00 |
| 57-239 | 186 | All | 2304.00 |
| 57-240 | 187 | All | 2304.00 |
| 57-241 | 188 | All | 2304.00 |
| 57-242 | 189 | All | 2304.00 |
| 57-243 | 190 | All | 2304.00 |
| 57-244 | 191 | All | 2304.00 |
| 57-245 | 192 | All | 2304.00 |
| 57-246 | 193 | All | 2304.00 |

OCS OFFICIAL PROTRACTION DIAGRAM, ST. MICHAEL NP 3-2
(Approved December 13, 1976)

| Tract | Block | Designation | Hectares |
|---|---|---|---|
| 57-247 | 194 | All | 2304.00 |
| 57-248 | 221 | All | 2304.00 |
| 57-249 | 222 | All | 2304.00 |
| 57-250 | 223 | All | 2304.00 |
| 57-251 | 224 | All | 2304.00 |
| 57-252 | 225 | All | 2304.00 |
| 57-253 | 226 | All | 2304.00 |
| 57-254 | 227 | All | 2304.00 |
| 57-255 | 228 | All | 2304.00 |
| 57-256 | 229 | All | 2304.00 |
| 57-257 | 230 | All | 2304.00 |
| 57-258 | 231 | All | 2304.00 |
| 57-259 | 232 | All | 2304.00 |
| 57-260 | 233 | All | 2304.00 |
| 57-261 | 234 | All | 2304.00 |
| 57-262 | 235 | All | 2304.00 |
| 57-263 | 236 | All | 2304.00 |
| 57-264 | 237 | All | 2304.00 |
| 57-265 | 238 | All | 2304.00 |
| 57-266 | 265 | All | 2304.00 |
| 57-267 | 266 | All | 2304.00 |
| 57-268 | 267 | All | 2304.00 |
| 57-269 | 268 | All | 2304.00 |
| 57-270 | 269 | All | 2304.00 |
| 57-271 | 270 | All | 2304.00 |
| 57-272 | 271 | All | 2304.00 |
| 57-273 | 272 | All | 2304.00 |
| 57-274 | 273 | All | 2304.00 |
| 57-275 | 274 | All | 2304.00 |
| 57-276 | 275 | All | 2304.00 |
| 57-277 | 276 | All | 2304.00 |
| 57-278 | 277 | All | 2304.00 |
| 57-279 | 278 | All | 2304.00 |
| 57-280 | 279 | All | 2304.00 |
| 57-281 | 280 | All | 2304.00 |
| 57-282 | 281 | All | 2304.00 |
| 57-283 | 309 | All | 2304.00 |
| 57-284 | 310 | All | 2304.00 |
| 57-285 | 311 | All | 2304.00 |
| 57-286 | 312 | All | 2304.00 |
| 57-287 | 313 | All | 2304.00 |
| 57-288 | 314 | All | 2304.00 |
| 57-289 | 315 | All | 2304.00 |
| 57-290 | 316 | All | 2304.00 |

OCS OFFICIAL PROTRACTION DIAGRAM, ST. MICHAEL NP 3-2
(Approved December 13, 1976)

| Tract | Block | Designation | Hectares |
|---|---|---|---|
| 57-291 | 317 | All | 2304.00 |
| 57-292 | 318 | All | 2304.00 |
| 57-293 | 319 | All | 2304.00 |
| 57-294 | 320 | All | 2304.00 |
| 57-295 | 321 | All | 2304.00 |
| 57-296 | 322 | All | 2304.00 |
| 57-297 | 323 | All | 2304.00 |
| 57-298 | 324 | All | 2304.00 |
| 57-299 | 325 | All | 2304.00 |
| 57-300 | 353 | All | 2304.00 |
| 57-301 | 354 | All | 2304.00 |
| 57-302 | 355 | All | 2304.00 |
| 57-303 | 356 | All | 2304.00 |
| 57-304 | 357 | All | 2304.00 |
| 57-305 | 358 | All | 2304.00 |
| 57-306 | 359 | All | 2304.00 |
| 57-307 | 360 | All | 2304.00 |
| 57-308 | 361 | All | 2304.00 |
| 57-309 | 362 | All | 2304.00 |
| 57-310 | 363 | All | 2304.00 |
| 57-311 | 364 | All | 2304.00 |
| 57-312 | 365 | All | 2304.00 |
| 57-313 | 366 | All | 2304.00 |
| 57-314 | 367 | All | 2304.00 |
| 57-315 | 368 | All | 2304.00 |
| 57-316 | 369 | All | 2304.00 |
| 57-317 | 398 | All | 2304.00 |
| 57-318 | 399 | All | 2304.00 |
| 57-319 | 400 | All | 2304.00 |
| 57-320 | 401 | All | 2304.00 |
| 57-321 | 402 | All | 2304.00 |
| 57-322 | 403 | All | 2304.00 |
| 57-323 | 404 | All | 2304.00 |
| 57-324 | 405 | All | 2304.00 |
| 57-325 | 406 | All | 2304.00 |
| 57-326 | 407 | All | 2304.00 |
| 57-327 | 408 | All | 2304.00 |
| 57-328 | 409 | All | 2304.00 |
| 57-329 | 410 | All | 2304.00 |
| 57-330 | 411 | All | 2304.00 |
| 57-331 | 412 | All | 2304.00 |
| 57-332 | 413 | All | 2304.00 |
| 57-333 | 442 | All | 2304.00 |
| 57-334 | 443 | All | 2304.00 |

OCS OFFICIAL PROTRACTION DIAGRAM, ST. MICHAEL NP 3-2
(Approved December 13, 1976)

| Tract | Block | Designation | Hectares |
|---|---|---|---|
| 57-335 | 444 | All | 2304.00 |
| 57-336 | 445 | All | 2304.00 |
| 57-337 | 446 | All | 2304.00 |
| 57-338 | 447 | All | 2304.00 |
| 57-339 | 448 | All | 2304.00 |
| 57-340 | 449 | All | 2304.00 |
| 57-341 | 450 | All | 2304.00 |
| 57-342 | 451 | All | 2304.00 |
| 57-343 | 452 | All | 2304.00 |
| 57-344 | 453 | All | 2304.00 |
| 57-345 | 454 | All | 2304.00 |
| 57-346 | 455 | All | 2304.00 |
| 57-347 | 456 | All | 2304.00 |
| 57-348 | 486 | All | 2304.00 |
| 57-349 | 487 | All | 2304.00 |
| 57-350 | 489 | All | 2304.00 |
| 57-351 | 490 | All | 2304.00 |
| 57-352 | 491 | All | 2304.00 |
| 57-353 | 492 | All | 2304.00 |
| 57-354 | 493 | All | 2304.00 |
| 57-355 | 494 | All | 2304.00 |
| 57-356 | 495 | All | 2304.00 |
| 57-357 | 496 | All | 2304.00 |
| 57-358 | 497 | All | 2304.00 |
| 57-359 | 498 | All | 2304.00 |
| 57-360 | 499 | All | 2304.00 |
| 57-361 | 500 | All | 2304.00 |
| 57-362 | 501 | All | 2304.00 |
| 57-363 | 530 | All | 2304.00 |
| 57-364 | 531 | All | 2304.00 |
| 57-365 | 533 | All | 2304.00 |
| 57-366 | 534 | All | 2304.00 |
| 57-374 | 542 | All | 2304.00 |
| 57-375 | 543 | All | 2304.00 |
| 57-376 | 544 | All | 2304.00 |
| 57-377 | 545 | All | 2304.00 |

OCS OFFICIAL PROTRACTION DIAGRAM, NOME NQ 3-7
(Approved December 13, 1976)

| Tract | Block | Designation | Hectares |
|---|---|---|---|
| 57-382 | 859 | All | 2304.00 |
| 57-383 | 860 | All | 2304.00 |
| 57-384 | 861 | All | 2304.00 |
| 57-385 | 948 | All | 2304.00 |
| 57-386 | 949 | All | 2304.00 |
| 57-387 | 951 | All | 2304.00 |
| 57-388 | 952 | All | 2304.00 |
| 57-389 | 953 | All | 2304.00 |
| 57-390 | 954 | All | 2304.00 |
| 57-391 | 992 | All | 2304.00 |
| 57-392 | 993 | All | 2304.00 |
| 57-393 | 994 | All | 2304.00 |
| 57-394 | 995 | All | 2304.00 |
| 57-395 | 996 | All | 2304.00 |
| 57-396 | 997 | All | 2304.00 |
| 57-397 | 998 | All | 2304.00 |
| 57-398 | 1036 | All | 2304.00 |
| 57-399 | 1037 | All | 2304.00 |
| 57-400 | 1038 | All | 2304.00 |
| 57-401 | 1039 | All | 2304.00 |
| 57-402 | 1040 | All | 2304.00 |
| 57-403 | 1041 | All | 2304.00 |
| 57-404 | 1042 | All | 2304.00 |

OCS OFFICIAL PROTRACTION DIAGRAM, SOLOMON NQ 3-8
(Approved December 13, 1976)

| Tract | Block | Designation | Hectares |
|---|---|---|---|
| 57-405 | 937 | All | 2304.00 |
| 57-406 | 938 | All | 2304.00 |
| 57-407 | 939 | All | 2304.00 |
| 57-408 | 940 | All | 2304.00 |
| 57-409 | 969 | All | 2304.00 |
| 57-410 | 970 | All | 2304.00 |
| 57-411 | 971 | All | 2304.00 |
| 57-412 | 972 | All | 2304.00 |
| 57-413 | 981 | All | 2304.00 |
| 57-414 | 982 | All | 2304.00 |
| 57-415 | 983 | All | 2304.00 |
| 57-416 | 984 | All | 2304.00 |
| 57-417 | 1013 | All | 2304.00 |
| 57-418 | 1014 | All | 2304.00 |
| 57-419 | 1015 | All | 2304.00 |
| 57-420 | 1016 | All | 2304.00 |
| 57-421 | 1020 | All | 2304.00 |
| 57-422 | 1021 | All | 2304.00 |
| 57-423 | 1022 | All | 2304.00 |
| 57-424 | 1023 | All | 2304.00 |
| 57-425 | 1024 | All | 2304.00 |
| 57-426 | 1025 | All | 2304.00 |
| 57-427 | 1026 | All | 2304.00 |
| 57-428 | 1027 | All | 2304.00 |
| 57-429 | 1028 | All | 2304.00 |

13. Lease Terms and Stipulations:

a. All leases issued as a result of this sale will be for an initial term of 10 years. Leases issued as a result of this sale will be on Form MMS-2005 (August 1982), available from the Regional Manager, Alaska Outer Continental Shelf Region, at the first address stated in paragraph 2.

b. For leases resulting from this sale for tracts offered on a cash bonus basis with fixed sliding scale royalty, listed in paragraph 4(a), Form MMS-2005 will be amended as follows:

Sec. 6. Royalty on Production. The lessee agrees to pay the lessor a royalty of that percent in amount or value of production from the leased area as determined by the sliding scale royalty formula as follows. When the quarterly value of production, adjusted for inflation, is less than or equal to $16.697566 million, a royalty of 12.50000 percent in amount or value of production will be due on the unadjusted value or amount of production. When the adjusted quarterly value of production is equal to or greater than $16.697567 million, but less than or equal to $11822.537759 million, the royalty percent due on the unadjusted value or amount of production is given by

$Rj = b[Ln (Vj/S)]$ where

$Rj$ = the percent royalty that is due and payable on the unadjusted amount or value of production in quarter j

$b = 8.0$

$Ln$ = natural logarithm

$Vj$ = the value of production in quarter j, adjusted for inflation, in millions of dollars

$S = 3.50$

When the adjusted quarterly value of production is equal to or greater than $11822.537760 million, a royalty of 65.00000 percent in amount or value of production will be due on the unadjusted quarterly value of production. Thus, in no instance will the quarterly royalty due exceed 65.00000 percent in amount or value of quarterly production.

In determining the quarterly percent royalty due, Rj, the calculation will be carried to five decimal places (for example, 18.56224 percent). This calculation will incorporate the adjusted quarterly value of production, Vj, in millions of dollars, rounded to the sixth digit, i.e., to the nearest dollar (for example, 35.624831 millions of dollars). Gas of all kinds (except helium) is subject to royalty. The lessor shall determine whether production royalty shall be paid in amount or value.

c. Except as otherwise noted, the following stipulations will be included in each lease resulting from this sale. In the following stipulations and information to lessees in paragraph 14, below, the term RS refers to the Regional Supervisor, Offshore Field Operations, Minerals Management Service, formerly Deputy Conservation Manager, Field Operations, U.S. Geological Survey.

Stipulation No. 1:

If the RS has reason to believe that a site, structure or object of historical or archeological significance, hereinafter referred to as a "cultural resource," may exist in the leased area and gives the lessee written notice that the lessor is enforcing the provisions of this stipulation, the lessee shall, upon receipt of such notice, comply with the following requirements:

(1) Prior to any dredging or drilling activity or the construction or placement of any structure for exploration or development on the lease, including, but not limited to, well drilling, and pipeline and platform placement, hereinafter in this stipulation referred to as "operation," the lessee shall conduct remote sensing surveys and/or prepare a report, as specified by the RS, to determine the potential existence of any cultural resource that may be affected by such operation. All data produced as well as other pertinent natural and cultural environmental data shall be examined by an archeologist and geophysicist to determine if indicators are present suggesting the existence of a cultural resource that may be adversely affected by any lease operation. A report of such surveys and assessments prepared by an archeologist and geophysicist shall be submitted by the lessee to the RS.

(2) If they determine such cultural resource indicators are present, the lessee shall: (a) locate the site of the lease operation so as not to adversely affect the identified location; or (b) establish to the satisfaction of the RS, on the basis of further archeological investigation conducted by an archeologist and geophysicist using such survey equipment and techniques as deemed necessary by the RS, either that such operation will not adversely affect the location identified or that the potential cultural resource suggested by the occurrence of the indicators does not exist.

(3) A report of the latter investigation prepared by the archeologist and geophysicist shall be submitted to the RS for review. Should the RS determine that the existence of a cultural resource which may be adversely affected by such operations is sufficiently established to warrant protection, the lessee shall take no action that may result in an adverse effect on such cultural resource until the RS has given directions as to its protection.

In addition, the lessee agrees that if any cultural resource should be discovered during the conduct of any operations on the lease area, he shall report immediately such findings to the RS and make every reasonable effort to protect the cultural resource until the RS gives directions as to its protection.

Stipulation No. 2:

The lessee shall include in any exploration and development plans submitted under 30 CFR 250.34 a proposed environmental training program for all personnel involved in exploration or development activities (including personnel of the lessee's contractors and subcontractors) for review and approval by the RS. The program shall be designed to inform each person working on the project of specific types of environmental, social, and cultural concerns which relate to the individual's job. The program shall be formulated by qualified instructors experienced in each pertinent field of study, and shall employ effective methods to insure that personnel are informed of archaeological, geological, and biological resources including bird colonies and sea mammal haul-out areas, to insure avoidance and non-harassment of wildlife resources. The program shall also be designed to increase the sensitivity and understanding of personnel to community values, customs, and lifestyles in areas in which such personnel will be operating.

The lessee shall also submit for review and approval a continuing technical environmental briefing program for supervisory and managerial personnel of the lessee and its agents, contractors, and subcontractors.

Stipulation No. 3: (To be included only in the leases resulting from this sale for the fixed sliding scale royalty tracts identified in paragraph 4 (a) of this notice.)

(a) The royalty rate on production from this lease is subject to consideration for reduction under the same authority that applies to all other oil and gas leases on the Outer Continental Shelf (30 CFR 250.21). The Director, Minerals Management Service, may grant a reduction for only one year at a time and reduction of royalty rates will not be approved unless production has been underway for one year or more.

(b) Although the royalty rate specified in section 6(a) of this lease or as subsequently modified in accordance with applicable regulations and stipulations is applicable to all production under this lease, not more than 16-2/3 percent of the production from the lease area may be taken as royalty in amount, except as provided in sec. 15(d); the royalty on any portion of the production from the lease in excess of 16-2/3 percent may only be taken in value of the production from the lease area.

Stipulation No. 4:

Exploratory drilling and other downhole activities above a predetermined threshold depth, as determined by the RS, will be allowed year-round areawide (subject to the limitations of other applicable stipulations).

Exploratory drilling and other downhole activities below a predetermined threshold depth, with the exception of testing through casing, are prohibited in broken and pack ice conditions unless the lessee first demonstrates to the satisfaction of the RS, with concurrence of the State of Alaska, the theoretical, experimental and physical capability to detect, contain, clean up and dispose of spilled oil in broken and pack ice conditions.

Stipulation No. 5:

The RS has the authority to suspend oil and gas drilling operations whenever bowhead whales are near enough to be affected by oilspills or other disturbances which would be likely to adversely affect the species. If bowhead whales are east of St. Lawrence Island, the RS may prohibit exploratory drilling and other downhole activities below a predetermined threshold depth (except testing through casing), as determined by the RS. Such prohibition would continue until it is determined that the whales are outside the zone of probable influence or are no longer subject to likely risk from disturbances or oilspills, unless the RS determines that continued operations are necessary to prevent a loss of well control or to ensure human safety. The period when bowhead whales are most likely to migrate through or be present in the area is generally, but not limited to, April 15 through June 15 and November 1 through January 1.

Stipulation No. 6:

Pipelines will be required (a) if pipeline rights-of-way can be determined and obtained; (b) if laying such pipelines is technically and economically feasible and environmentally preferable; and (c) if, in the opinion of the lessor, pipelines can be laid without net social loss, taking into account any incremental costs of pipelines over alternative methods of transportation and any incremental benefits in the form of increased environmental protection or reduced multiple use conflicts. The lessor specifically reserves the right to require that any pipeline used for transporting production be placed in certain designated management areas. In selecting the means of transportation, including any loading facilities, consideration will be given to any recommendation of the Regional Technical Working Group or other similar advisory group with participation of Federal, State, and local government and industry.

All pipelines, including both flow lines and gathering lines for oil and gas, shall be designed and constructed to provide for adequate protection from water currents, storms and ice gouging, subfreezing conditions, and other hazards as determined on a case-by-case basis.

Following the development of sufficient pipeline capacity, no crude oil will be transported by surface vessel from offshore production sites, except in the case of emergency. Determinations as to emergency conditions and appropriate responses to these conditions will be made by the RS.

Where the three criteria set forth in the first sentence of this stipulation are not met and surface transportation must be employed, all vessels used for transporting hydrocarbons from the leased area must conform with all standards established for such vessels, pursuant to the Ports and Waterways Safety Act for 1972 (46 U.S.C. 391a), and the Port and Tanker Safety Act of 1978, as amended (33 U.S.C. 1221).

Stipulation No. 7: (This stipulation will be included in leases only for tracts 57-317 through 57-366 and 57-374 through 57-377.)

In order to protect the wildlife and subsistence resources of the Yukon Delta, offshore loading on this tract of produced oil, except during testing for well producibility or in the case of an emergency, is prohibited if such a prohibition on offshore loading is technically and economically feasible, safe, and environmentally preferable.

Stipulation No. 8:

In the event of production, discharge of produced waters into open or ice-covered water areas of less than 10 meters is prohibited, unless the RS determines, with the concurrence of the State of Alaska, that such produced waters are non-polluting, in the following tracts: 57-350 through 57-358, and 57-365, 57-366, and 57-374 through 57-377.

The following restrictions apply on all tracts: the discharge of oil-based or oil-contaminated drilling muds and/or cuttings into the marine environment is prohibited. The discharge of non oil-contaminated drilling muds and cuttings shall be consistent with National Pollutant Discharge Elimination System (NPDES) permit conditions.

14. Information to Lessees:

a) Bidders are advised that during the conduct of all activities related to leases issued as a result of this lease sale, the lessee and its agents, contractors, and subcontractors will be subject to the provisions of the Marine Mammal Protection Act of 1972, the Endangered Species Act of 1973, as amended, and International Treaties.

The lessee or its contractors should be aware that disturbance of wildlife could constitute harassment and could thereby be in violation of existing laws. Violations of these Acts and Treaties may be reported to the National Marine Fisheries Service or U.S. Fish and Wildlife Service, as appropriate.

Behavioral disturbance of most birds and mammals found in or near the Sale 57 area would be unlikely if ocean vessels and aircraft maintained at least a 1-mile distance from observed wildlife or known wildlife concentration areas such as bird colonies, marine mammal haul-out areas, and peregrine falcon nests. Therefore, in concurrence with the National Marine Fisheries Service and the U.S. Fish and Wildlife Service, it is recommended that aircraft or vessels operated by lessees maintain at least a 1-mile distance from observed or known wildlife concentration areas. Human safety will take precedence at all times over these provisions. Major wildlife concentration areas are depicted on Graphics Nos. 4A, 4B, and 5A of the final environmental impact statement for this sale and additional maps available from the RS and appropriate resource agencies.

b) Some of the tracts offered for lease may fall in areas which may be included in fairways, precautionary zones, or traffic separation schemes which may be established, among other reasons, to protect maritime commerce. Bidders are advised that the United States reserves the right to designate necessary fairways through leased tracts pursuant to the Port and Waterways Safety Act, as amended (33 U.S.C. 1221 et seq.).

c) Bidders are advised that portions of the Iditarod Trail, from Kaltag to Nome, following along Norton Sound and crossing the ice between Shaktoolik and Bald Head and between Ungalik and Bald Head, are managed by the Bureau of Land Management, U.S. Department of Interior. The management and protection of the Historic Trail is subject to the following laws:

(1) the National Trails System Act, as amended (16 U.S.C. 1241 et seq.);

(2) the National Historic Preservation Act, as amended (16 U.S.C. 470 et seq.);

(3) the Historic Sites Act of 1935 (16 U.S.C. 461 et seq.);

(4) the Antiquities Act of 1906 (16 U.S.C. 431-433); and,

(5) other State and Federal laws.

d) Lessees are advised that oil and gas exploration and production operations should be conducted so as to minimize interference with subsistence harvests.

e) Lessees are notified that adequate oilspill contingency plans are required under Alaska OCS Operating Order No. 7, under 30 CFR 250.11 and 250.43, prior to approval of Exploration or Development and Production Plans. In accordance with 30 CFR 250.34-1 the Minerals Management Service is required to review oilspill contingency plans. Lessees are advised that the Yukon Delta is an area of Special Biological Sensitivity under Alaska OCS Operating Order No. 7 and will require protection in oilspill contingency plans. Review of oilspill contingency plans under 30 CFR 250.34-1 for tracts 57-317 through 57-366 and 57-374 through 57-377 may result in the requirement of special measures to protect the biological resources and associated subsistence values of the Yukon Delta. Also, the leads and polynyas close to St. Lawrence Island are areas of Special Biological Sensitivity under Alaska OCS Operating Order No. 7, and will require protection in oilspill contingency plans. Such protection should not include dispersant usage unless such usage has been approved in advance.

f) Lessees are advised that, after identifying potential OCS-related facility sites and activities, they should consult with the local and State planning agencies involved in coastal zone area review in order to provide coordination on coastal zone development and the siting of energy facilities. The State has indicated that State approval of Coastal Management Programs (CMP's) for Nome, Bethel, and the Yukon-Kuskokwim Coastal Resource Service Area (CRSA) is expected in 1983 and that the Bering Straits CRSA Program should be completed and receive State approval sometime in 1984. Federal approval of CMP's may require as much as one additional year after State approval. Early coordination with these planning groups will assist in the identification of suitable facility siting.

g) Bidders are advised that drilling or emplacement of bottom-founded structures will not be allowed on tract 57-387 unless or until the lessee has demonstrated to the RS's satisfaction that drilling or bottom-founded structures can be safely designed to control possible high-pressure, thermogenic gas at the proposed location or that the hazard is not present at the site.

h) Corps of Engineers permits are required for construction of any artificial islands, installations and other devices permanently or temporarily attached to the seabed located on the Outer Continental Shelf in accordance with Section 4(e) of the Outer Continental Shelf Lands Act of 1953, as amended.

i) Bidders are advised that the Departments of the Interior and Transportation have entered into a Memorandum of Understanding, dated May 6, 1976, concerning the design, installation, operation and maintenance of offshore pipelines. Bidders should consult both Departments for regulations applicable to offshore pipelines.

j) Bidders are also advised that in accordance with Sec. 16 of each lease offered at this sale, the lessor may require a lessee to operate under a unit, pooling or drilling agreement, and that the lessor will give particular consideration to requiring unitization in instances where one or more reservoirs underlie two or more leases with either a different royalty rate or a royalty rate based on a sliding scale.

k) Revisions of Department of Labor regulations on affirmative action requirements for government contractors (including lessees) have been deferred, pending review of those regulations (see Federal Register of August 25, 1981, at 46 F.R. 42865 and 42968). Should those changes become effective at any time before the issuance of leases resulting from this sale, Section 18 of the lease form, Form MMS-2005 (August 1982), would be deleted from leases resulting from this sale. In addition, existing stocks of the affirmative action forms described in Section 5 of this notice contain language that would be superseded by the revised regulations at 41 CFR 60-1.5(a)(1) and 60-1.7(a)(1). Pending the issuance of revised versions of Forms 1140-7 and 1140-8, submission of Form 1140-7 (June 1982) and Form 1140-8 (June 1982) will not invalidate an otherwise acceptable bid, and the revised regulations' requirements will be deemed to be part of the existing affirmative action forms.

l) Easements for the use of sand and gravel on oil and gas leases may be granted by the Secretary. The appropriate vehicle for this is approval of exploration plans and development and production plans requiring these easements. These easements may extend across tract boundaries to any leasehold covered by a plan. Such plans may apply to more than one lease held by a lessee or by a group of lessees acting under a unitization, pooling, or drilling agreement.

Where sand and gravel sources exist on tracts not leased for oil and gas or not appropriately included in an exploration plan or development and production plan, the right to use sand and gravel from these tracts can only be obtained through competitive leasing under Section 8(k) of the OCS Lands Act, as amended.

On tracts where the oil and gas lessee and the sand and gravel lessee are not the same, the correlative rights of the holder of an easement to use sand and gravel in connection with an oil and gas lease, and a lessee of the sand and gravel itself, have yet to be determined. Either the regulations concerning easements, or the Notice of Sale for a sand and gravel lease sale, or both, could define the rights of those parties.

m) Bidders are advised that pursuant to 30 CFR 250.34-1(a)(3), the lessee shall submit to Minerals Management Service either an exploration plan or a general statement of exploration intentions prior to the end of the ninth lease year.

n) Lessees are advised that the RS has the authority to suspend oil and gas exploratory drilling activities on any lease whenever gray whales are present in the migratory corridor or sale area and are near enough to be subject to probable oilspill risk or probable risk from other disturbances. The Department of the Interior has determined that gray whales migrate through or are in the vicinity of Norton Sound generally from late May through July and from September through October. If gray whales are east of St. Lawrence Island, the RS may order the cessation of exploratory drilling below a threshold predetermined by the RS until it is determined that the whales are outside the zone of likely influence or no longer subject to risk from probable oilspills or other disturbances.

o) In addressing biological concerns the RS will receive recommendations from a Bering Sea Biological Task Force (BTF). The BTF will be composed of designated representatives of the MMS, U.S. Fish and Wildlife Service, the National Marine Fisheries Service, and the Environmental Protection Agency. The Bering Sea BTF should consult with representatives of the State of Alaska before making recommendations to the RS.

p) Lessees should design the environmental training program required by Stipulation No. 2 to incorporate the views and concerns of local individuals and communities. Lessees are encouraged to provide opportunities to local individuals, organizations and governments, including local coastal districts to participate in the development of the environmental training programs.

q) Lessees are encouraged to hire Alaska residents to perform work done by and for them within the State of Alaska. Lessees are advised that there is considerable local interest in employment associated with petroleum exploration, development and production activities. Lessees are encouraged through affirmative action programs or otherwise, to provide opportunities to local individuals and organizations to acquire the skills necessary to participate in exploration, development and production activities and are encouraged to provide, through affirmative action program or otherwise, employment opportunities for qualified local individuals and organizations. Lessees are also advised that employment of local individuals and organizations may be one method of mitigating certain local social and economic impacts.

r) Lessees are advised that exploration, development and production activities may directly and indirectly have significant social and economic impacts on local individuals and communities. Lessees are encouraged to consult with local individuals, organizations and governments, including local coastal districts, to identify direct and indirect social and economic impacts of exploration, development and production activities prior to undertaking those activities. Lessees are encouraged to consult with and enter into agreements with local individuals, organizations and governments to compensate for direct and indirect social and economic impacts of exploration, development and production activities. Lessees are advised that this may include, among others, support to or provision of local community recreation facilities, mental health, drug and alcohol treatment services and facilities, or community safety services and capital improvement projects.

s) Lessees are informed that, pursuant to 15 CFR 930.70 et seq., the State has the authority to review for concurrence or objection consistency certifications for all Federal license and permit activities described in detail in OCS plans and which affect the coastal zone. Lessees are reminded that the State has permitting authority for activities in its coastal zone pursuant to the provisions of the approved Alaska Coastal Management Program.

15. OCS Orders: Operations on all leases resulting from this sale will be conducted in accordance with the provisions of all Alaska OCS Orders, as of their effective date, and any other applicable OCS Order as it becomes effective.

DEPUTY Director, Minerals Management Service
David C. Russell

Date: FEB 4 1983

Approved

Secretary of the Interior
James G. Watt

Certified to be a true copy of the original

Certifying Officer

[FR Doc. 83-3540 Filed 2-9-83; 8:45 am]
BILLING CODE 4310-MR-C

4310-MR

UNITED STATES
DEPARTMENT OF THE INTERIOR
MINERALS MANAGEMENT SERVICE

Outer Continental Shelf
Norton Basin

Notice of Leasing Systems, Sale No. 57

Section 8(a)(8) (43 U.S.C. 1337 (a)(8)) of the Outer Continental Shelf Lands Act (OCSLA), as amended, requires that, at least 30 days before any lease sale, a notice be submitted to the Congress and published in the Federal Register:

(A) identifying the bidding systems to be used and the reasons for such use, and

(B) designating the tracts to be offered under each bidding system and the reasons for such designation.

This notice is published pursuant to these requirements.

A. Bidding systems to be used. In OCS Sale No. 57, tracts will be offered under the following two bidding systems as authorized by section 8(a)(1) (43 U.S.C. 1337 (a)(1)): (1) bonus bidding with a fixed sliding scale royalty on 123 tracts, and (2) bonus bidding with a 12 1/2 percent royalty on 295 tracts.

(1) Bonus Bidding with a Fixed Sliding Scale Royalty. This system is authorized by section (8)(a)(1)(C) of the OCSLA, as amended. The sliding scale is designed to establish higher royalty rates for larger reservoirs with higher production rates. As such, the expected bonus is reduced compared to a fixed one-sixth royalty system. This may improve competition for leases, and also tends to reduce the likelihood of production losses that could result if higher royalty rates are set by other means, such as royalty bidding, prior to reservoir delineation and production. The fixed sliding scale formula provided for Sale No. 57 is based on the current assumed range of costs and wellhead prices for this area.

The fixed sliding scale formula operates in the following way: when the quarterly value of production, adjusted for inflation, is less than or equal to $16.697566 million, a royalty of 12.50000 percent in amount or value of production will be due on the unadjusted value or amount of production. When the adjusted quarterly value of production is equal to or greater than $16.697567 million, but less than or equal to $11822.537759 million, the royalty percent due on the unadjusted value or amount of production is given by

$$Rj = b\,[\ln(Vj/S)] \text{ where}$$

$Rj$ = the percent royalty that is due and payable on the unadjusted amount or value of all production in quarter j

$b = 8.0$

$\ln$ = natural logarithm

$Vj$ = the value production in quarter j, adjusted for inflation, in millions of dollars

$S = 3.50$

When the adjusted quarterly value of production is equal to or greater than $11822.537760 million, a royalty of 65.00000 percent in amount or value of production will be due on the unadjusted quarterly value of production. Thus, in no instance will the quarterly royalty due exceed 65.00000 percent in amount or value of quarterly production.

In adjusting the quarterly value of production for use in calculating the percent royalty due on production during the quarter, the actual value of production will be adjusted to account for the effects of inflation by dividing the actual value of production by the following inflation adjustment factor. The inflation adjustment factor used will be the ratio of the GNP fixed weighted price index for the calendar quarter preceding the

quarter of production to the value of that index for the quarter preceding the issuance of the lease. The GNP fixed weighted price index is published monthly in the Survey of Current Business by the Bureau of Economic Analysis, U.S. Department of Commerce. The percent royalty will be due and payable on the actual amount or value of production as determined pursuant to 30 CFR 250.64.

(2) Bonus Bidding with a 12 1/2 Percent Royalty. This system is authorized by section (8)(a)(1)(A) of the OCSLA, as amended. This system has been chosen for certain deeper water tracts proposed for Sale No. 57 because these tracts are expected to require substantially higher exploration, development, and production costs, as well as longer times before initial production, in comparison to more shallow water tracts. Department of the Interior analyses indicate that the minimum economically developable discovery on a tract in such high cost areas under a 12 1/2 percent royalty system would be less than for the same tracts under a 16 2/3 percent royalty system. As a result, more tracts may be explored and developed. In addition, the lower royalty rate system is expected to yield more rapid production rates and higher economic profits. It is not anticipated, however, that the larger cash bonus bid associated with a lower royalty rate will significantly reduce competition, since the higher costs for exploration and development are the primary restraints to competition.

[FR Doc. 83-3541 Filed 2-9-83; 8:45 am]
BILLING CODE 4310-MR-C

B. Designation of Tracts. The selection of tracts to be offered under the two systems was based on the following factors:

(1) Every effort was made based on available information so that different bidding systems did not split a single geological structure.

(2) Tracts were selected in those resource and cost areas that were appropriate to the identified sliding scale parameters for this sale.

The specific tracts to be offered under each system are as follows:

(a) Bonus Bidding with a Fixed Sliding Scale Royalty—Tracts 57-33 thru 57-38, 57-40 thru 57-47, 57-49 thru 57-56, and 57-58 thru 57-158.

(b) Bonus Bidding with a 12 1/2 Percent Royalty -- All remaining tracts.

DEPUTY Director, Minerals Management Service
David C. Russell

Approved: FEB 4 1983

James G. Watt
Secretary of the Interior

Certified to be a true copy of the original

Certifying Officer

## Office of Surface Mining Reclamation and Enforcement

### Wyoming; Receipt of Complete Petition for Designation of Lands as Unsuitable for Surface Coal Mining Operations

*Correction*

In FR Doc. 83-1503 appearing on page 2452 in the issue of Wednesday, January 19, 1983, make the following correction:

On page 2452, third column, in the 9th line from the top, "(92.160 acres)" should have read "(92,160 acres)".

BILLING CODE 1505-01-M

## INTERSTATE COMMERCE COMMISSION

[No. MC-F-15094]

### Cross Country Corp.; Continuance in Control Exemption—Mid Seven Transportation Company

**AGENCY:** Interstate Commerce Commission.

**ACTION:** Notice of proposed exemption.

**SUMMARY:** Pursuant to 49 U.S.C. 11343(e) and the Commission's regulations in Ex Parte No. 400 (Sub-No. 1), *Procedures for Handling Exemptions filed by Motor Carriers of Property under 49 U.S.C. 11343*, 47 FR 53303 (November 24, 1982), Cross Country Corp., and, in turn, L. W. Simpson and Joseph Simpson, who jointly control Cross, seek an exemption from the requirement under section 11343 of prior regulatory approval for their continuance in control of Mid Seven Transportation Company (No. MC-16831), which is a motor carrier.

**DATES:** Comments must be received within 30 days after the date of publication in the **Federal Register.**

**ADDRESSES:** Send comments to:

(1) Motor Section, Team 5, Room 2414, Interstate Commerce Commission, Washington, DC 20423, and

(2) Petitioner's representative, William L. Fairbank, 2400 Financial Center, Des Moines, IA 50309.

Comments should refer to No. MC-F-15094.

**FOR FURTHER INFORMATION CONTACT:** Lois Thompson, (202) 275-7289.

**SUPPLEMENTARY INFORMATION:** Please refer to the petition for exemption, which may be obtained free of charge by contacting petitioner's representative.

In the alternative, the petition for exemption may be inspected at the offices of the Interstate Commerce Commission during usual business hours.

Decided January 31, 1983.

By the Commission, Heber P. Hardy, Director, Office of Proceedings.

Note.—Cross Country Corp., has filed a directly-related application in No. MC-165818, published in this same issue.

**Agatha L. Mergenovich,**

*Secretary.*

[FR Doc. 83-3571 Filed 2-9-83; 8:45 am]

BILLING CODE 7035-01-M

[No. MC-F-15078]

### Motor Carriers; Glenn's Truck Service, Inc.—Purchase (Portion) Exemption—Shoemaker Trucking Company (Loren Wetzel, Trustee in Bankruptcy)

**AGENCY:** Interstate Commerce Commission.

**ACTION:** Notice of proposed exemption.

**SUMMARY:** Pursuant to 49 U.S.C. 11343(e) and the Commission's regulations in Ex Parte No. 400 (Sub-No. 1) *Procedures for Handling Exemptions Filed by Motor Carriers of Property under 49 U.S.C. 11343*, 47 FR 53303 (November 23, 1982), Glenn's Truck Service, Inc., (Glenn's) (MC-144683) seeks an exemption from the requirement under section 11343 of prior regulatory approval for Glenn's proposed acquisition of the operating authority of Shoemaker Trucking Company (Shoemaker) (MC-138875) contained in MC-138875 (Sub-No. 293) which encompasses the motor common carrier irregular route authority in the transportation of food and related products, between points in Illinois and Louisiana, on the one hand, and, on the other, points in Arizona, California, Colorado, Idaho, Nevada, Oregon, Utah, and Washington, through purchase from Loren Wetzel, Trustee in Bankruptcy of Shoemaker.

**DATES:** Comments must be received within 30 days after the date of publication in the **Federal Register.**

**ADDRESS:** Send comments to:

(1) Motor Section, Room 2139, Interstate Commerce Commission, Washington, DC 20423.

(2) Petitioner's representative, Larry D. Knox, 600 Hubbell Building, Des Moines, IA 50309, and

(3) Trustee's representative, David E. Wishney, P.O. Box 837, Boise, ID 83701.

Comments should refer to No. MC-F-15078.

**FOR FURTHER INFORMATION CONTACT:** Warren C. Wood, (202) 275-7949.

**SUPPLEMENTAL INFORMATION:** Please refer to the petition for exemption, which may be obtained free of charge by contacting petitioner's representative. In the alternative, the petition for exemption may be inspected at the offices of the Interstate Commerce Commission during usual business hours.

Decided: February 4, 1983.

By the Commission, Heber P. Hardy, Director, Office of Proceedings.

**Agatha L. Mergenovich,**

*Secretary.*

[FR Doc. 83-3573 Filed 2-9-83; 8:45 am]

BILLING CODE 7035-01-M

### Motor Carriers; Finance Applications; Decision Notice

As indicated by the findings below, the Commission has approved the following applications filed under 49 U.S.C. 10924, 10926, 10931 and 10932.

*We find:*

Each transaction is exempt from section 11343 of the Interstate Commerce Act, and complies with the appropriate transfer rules.

This decision is neither a major Federal action significantly affecting the quality of the human environment not a major regulatory action under the Energy Policy and Conservation Act of 1975.

Petitions seeking reconsideration must be filed within 20 days from the date of this publication. Replies must be filed within 20 days after the final date for filing petitions for reconsideration; any interested person may file and serve a reply upon the parties to the proceeding. Petitions which do not comply with the relevant transfer rules at 49 CFR 1181.4 may be rejected.

If petitions for reconsideration are not timely filed, and applicants satisfy the conditions, if any, which have been imposed, the application is granted and they will receive an effective notice. The notice will recite the compliance requirements which must be met before the transferee may commence operations.

Applicants must comply with any conditions set forth in the following decision-notices within 20 days after publication, or within any approved extension period. Otherwise, the decision-notice shall have no further effect.

*It is ordered:*

The following applications are approved, subject to the conditions stated in the publication, and further subject to the administrative requirements stated in the effective notice to be issued hereafter.

Note.—Please direct status inquiries to Team 4 at (202) 275-7669.

**Volume No. OP4FC-068**

By the Commission, Review Board No. 3, Member Krock, Joyce and Dowell.

MC-FC-81137. Previously noticed in the FR issue of January 28, 1983. By decision of January 18, 1983 issued under 49 U.S.C. 10926 and the transfer rules at 49 C.F.R. 1181, Review Board Number 3 approved the transfer to GREAT TRACK MOTOR LINES, INC., Memphis, TN, of certificate No. MC-152427, issued October 9, 1981, to NASHVILLE & ASHLAND CITY TRUCK LINE, INC., Nashville, TN, authorizing the transportation of *general commodities* (except classes A and B explosives), between Memphis, TN, on the one hand, and, on the other, those points in MS on and north of U.S. Hwy 80; those in MO on, south and east of a line beginning at the IL-MO State line and extending along MO Hwy 72 to junction U.S. Hwy 63, then along U.S. Hwy 63 to the MO-AR State line, and points in AR, KY, TN, AL and GA. An application for temporary authority has been filed. Representative: R. Connor Wiggins, Jr., 100 N. Main Bldg., Suite 909, Memphis, TN 38103, for both transferee and transferor.

Note.—(a) This application is filed to replace a petition for exemption under 49 U.S.C. 11343(e), filed in NO. MC-F-15037, and (b) The purpose of this republication is to show the proper parties in this proceeding.

Please direct status inquires about the following to Team 5, (202) 275-7289.

**Volume No. OP5-FC-46**

By the Commission, Review Board No. 2, Members Carleton, Williams and Ewing.

MC-FC-81151. By decision of January 31, 1983 issued under 49 U.S.C. 10926 and the transfer rules at 49 C.F.R. 1181, Board Number 2 approved the transfer to C & D REFRIGERATED, LTD., Beaver Dam, WI, of Certificate No. MC-152619 (Sub-No. 1), issued May 20, 1981, to CLARENCE E. SCHMIDT, doing business as C & J TRUCKING, Beaver Dam, WI, authorizing the transportation of foods and related products, between points in Dodge County, WI, on the one hand, and, on the other points in IL, MD, MI, NY, NJ, OH, PA, and DC. Representative: John L. Bruemmer, P.O. Box 927, Madison, WI 53701.

**Volume No. OP5-FC-47**

By the Commission, Review Board No. 3, Members Parker, Chandler and Fortier.

MC-FC-81132. By decision of January 27, 1983, issued under 49 U.S.C. 10926 and the transfer rules at 49 C.F.R. 1181, Review Board Number 1, approved the transfer to TRANSPORTATION SERVICES, INC., North Little Rock, AR, of Certificate No. MC-147348 Sub 2 issued November 6, 1980, to SOUTHWEST FREIGHT DISTRIBUTORS, INC., North Little Rock, AR, authorizing the transportation of *general commodities* (except those of unusual value, classes A and B explosives, household goods as defined by the Commission, commodities in bulk, and those requiring special equipment), between Little Rock, AR, and points in Clark, Ashley, Sebastian, Hot Spring, Garland, Saline, Jefferson, Arkansas, Lonoke, Perry, Monroe, White, Jackson, Faulkner, Pope, Johnson, Conway, Crawford, Craighead, Union, Drew, Bradley, Calhoun, St. Francis, Cross, Benton, Washington, Servier, Carroll, Boone, Baxter, Van Buren, Cleburne, Independence, Lawrence, Clay, Greene, Mississippi, Crittenden, Woodruff, Prairie, Desha, Lincoln, Chicot, Quachita, Nevada, Hempstead, Miller, Dallas, Columbia, Franklin, and Phillips Counties, AR, restricted to the transportation of traffic having a prior or subsequent movement by rail in piggyback service, Transferee is not a carrier. An application for temporary authority has been filed. Representative: James M. Duckett, Suite 411, 221 W. 2nd, Little Rock, AR 72201.

**Agatha L. Mergenovich,**

*Secretary.*

[FR Doc.83-3572 Filed 2-9-83; 8:45 am]

BILLING CODE 7035-01-M

---

**[Volume No. OP5-49]**

## Motor Carriers; Permanent Authority Decision; Decision-Notice

Decided: January 31, 1983.

The following operating rights applications, filed on or after July 3, 1980, are filed in connection with pending finance applications under 49 U.S.C. 10926, 11343 or 11344. The applications are governed by Special Rule 252 of the Commission's General Rules of Practice (49 CFR 1100.252).

Persons wishing to oppose an application must follow the rules under 49 CFR 1160.40-1160.49. Persons submitting protests to applications filed in connection with pending finance applications are requested to indicate across the front page of all documents and letters submitted that the involved proceeding is directly related to a finance application and the finance docket number should be provided. A copy of any application, together with applicant's supporting evidence, can be obtained from any applicant upon request and payment to applicant of $10.00.

Amendments to the request for authority are not allowed. However, the Commission may have modified the application to conform to the Commission's policy of simplifying grants of operating authority.

**Findings**

With the exceptions of those applications involving duly noted problems (e.g., unresolved common control, unresolved fitness questions, and jurisdictional problems) we find, preliminarily, that each applicant has demonstrated that its proposed service warrants a grant of the application under the governing section of the Interstate Commerce Act. Each applicant is fit, willing, and able properly to perform the service proposed and to conform to the requirements of Title 49, Subtitle IV, United States Code, and the Commission's regulations. Except where specifically noted, this decision is neither a major Federal action significantly affecting the quality of the human environment nor a major regulatory action under the Energy Policy and Conservation Act of 1975.

In the absence of legally sufficient protests in the form of verified statements as to the finance application *or* to the following operating rights applications directly related thereto filed within 45 days of publication of this decision-notice (or, if the application later becomes unopposed), appropriate authority will be issued to each applicant (except where the application involves duly noted problems) upon compliance with certain requirements which will be set forth in a notification of effectiveness of this decision-notice. Within 60 days after publication an applicant may file a verified statement in rebuttal to any statement in opposition.

Applicant(s) must comply with all conditions set forth in the grant or grants of authority within the time period specified in the notice of effectiveness of this decision-notice, or the application of a non-complying applicant shall stand denied.

To the extent that any of the authority granted may duplicate and applicant's other authority, the duplication shall be construed as conferring only a single operating right.

By the Commission, Review Board Number 2, Members Carleton, Williams, and Ewing.

**Agatha L. Mergenovich,**

*Secretary.*

MC 165818, filed January 21, 1983. Applicant: CROSS COUNTRY CORP., 2323 Delaware Ave., Des Moines, IA 50317. Representative: William L. Fairbank, 2400 Financial Center, Des Moines, IA 50309, (515) 282-3525. Transporting *general commodities*

(except classes A and B explosives, household goods, and commodities in bulk), between points in AR, CO, IL, IN, IA, KS, KY, MI, MN, MO, MT, NE, ND, OH, OK, SD, TN, WI, and WY.

Note.—Applicant has filed a directly-related petition for continuance in control exemption in No. MC-F-15094, published in this same issue.

[FR Doc. 83-3574 Filed 2-9-83; 8:45 am]

BILLING CODE 7035-01-M

[Volume No. OP3-24]

## Motor Carriers; Permanent Authority Decisions; Restriction Removals; Decision-Notice

Decided: February 4, 1983.

The following restriction removal applications, are governed by 49 CFR Part 1165. Part 1165 was published in the **Federal Register** of December 31, 1980, at 45 FR 86747 and redesignated at 47 FR 49590, November 1, 1982.

Persons wishing to file a comment to an application must follow the rules under 49 CFR 1165.12. A copy of any application can be obtained from any applicant upon request and payment to applicant of $10.00.

Amendments to the restriction removal applications are not allowed.

Some of the applications may have been modified prior to publication to conform to the special provisions applicable to restriction removal.

### Findings

We find, preliminarily, that each applicant has demonstrated that its requested removal of restrictions or broadening of unduly narrow authority is consistent with the criteria set forth in 49 U.S.C. 10922(h).

In the absence of comments filed within 25 days of publication of this decision-notice, appropriate reformed authority will be issued to each applicant. Prior to beginning operations under the newly issued authority, compliance must be made with the normal statutory and regulatory requirements for common an contract carriers.

By the Commission, Review Board No. 2, Members Carleton, Williams, and Ewing.

Agatha L. Mergenovich,

*Secretary.*

Note.—Please direct status inquiries to Team 3, at (202) 275-5223.

MC 147714 (Sub-1)X, Filed January 13, 1983. Applicant: TOMCO, INC., P.O. Box 1582, Bakersfield, CA 93302. Representative: William J. Monheim, P.O. Box 1756, Whittier, CA 90609. Lead permit: Broaden (1) from adhesives, chemicals, cleaning, scouring, or washing compounds, drugs, flotation reagents, plastic materials, plasticizers, soap, starch, foodstuffs, and non-petroleum based oils, to "such commodities as are dealt in by manufacturers of consumer products," and (2) broaden the territorial description to "between points in the U.S.," under continuing contract(s) with a named shipper.

[FR Doc. 83-3576 Filed 2-9-83; 8:45 am]

BILLING CODE 7035-01-M

## Motor Carriers; Permanent Authority Decisions; Decision-Notice

In the matter of Motor Common and Contract Carriers of Property (except fitness-only); Motor Common Carriers of Passengers (public interest); Freight Forwarders; Water Carriers; Household Goods Brokers.

The following applications for motor common or contract carriers of property, water carriage, freight forwarders, and household goods brokers are governed by Subpart A of Part 1160 of the Commission's General Rules of Practice. See 49 CFR Part 1160, Subpart A, published in the the **Federal Register** on November 1, 1982, at 47 FR 49583, which redesignated the regulations at 49 CFR 1100.251, published in the **Federal Register** December 31, 1980. For compliance procedures, see 49 CFR 1160.19. Persons wishing to oppose an application must follow the rules under 49 CFR Part 1160, Subpart B.

The following applications for motor common carriage of passengers, filed on or after November 19, 1982, are governed by Subpart D of 49 CFR Part 1160, published in **Federal Register** on November 24, 1982 at 47 FR 53271. For compliance procedures, see 49 CFR 1160.86. Carriers operating pursuant to an intrastate certificate also must comply with 49 U.S.C. 10922(c)(2)(E). Persons wishing to oppose an application must follow the rules under 49 CFR Part 1160, Subpart E. In addition to fitness grounds, these applications may be opposed on the grounds that the transportation to be authorized is not consistent with the public interest.

Applicant's representative is required to mail a copy of an application, including all supporting evidence, within three days of a request and upon payment to applicant's representative of $10.00.

Amendments to the request for authority are not allowed. Some of the applications may have been modified prior to publication to conform to the Commission's policy of simplifying grants of operating authority.

### Findings

With the exception of those applications involving duly noted problems (e.g., unresolved common control, fitness, water carrier dual operations, or jurisdictional questions) we find, preliminarily, that each applicant has demonstrated that it is fit, willing, and able to perform the service proposed, and to conform to the requirements of Title 49, Subtitle IV, United States Code, and the Commission's regulations.

We make an additional preliminary finding with respect to each of the following types of applications as indicated: common carrier of property—that the service proposed will serve a useful public purpose, responsive to a public demand or need; water common carrier—that the transportation to be provided under the certificate is or will be required by the public convenience and necessity; water contract carrier, motor contract carrier of property, freight forwarder, and household goods broker—that the transportation will be consistent with the public interest and the transportation policy of section 10101 of chapter 101 of Title 49 of the United States Code.

These presumptions shall not be deemed to exist where the application is opposed. Except where noted, this decision is neither a major Federal action significantly affecting the quality of the human environment nor a major regulatory action under the Energy Policy and Conservation Act of 1975.

In the absence of legally sufficient opposition in the form of verified statements filed on or before 45 days from date of publication (or, if the application later becomes unopposed), appropriate authorizing documents will be issued to applicants with regulated operations (except those with duly noted problems) and will remain in full effect only as long as the applicant maintains appropriate compliance. The unopposed applications involving new entrants will be subject to the issuance of an effective notice setting forth the compliance requirements which must be satisfied before the authority will be issued. Once this compliance is met, the authority will be issued.

Within 60 days after publication an applicant may file a verified statement in rebuttal to any statement in opposition.

To the extent that any of the authority granted may duplicate an applicant's other authority, the duplication shall be construed as conferring only a single operating right.

Note.—All applications are for authority to operate as a motor common carrier in interstate or foreign commerce over irregular routes, unless noted otherwise. Applications for motor contract carrier authority are those where service is for a named shipper "under contract." Applications filed under 49 U.S.C. 10922(c)(2)(B) to operate in intrastate commerce over regular routes as a motor common carrier of passengers are duly. Please direct status inquiries about the following to Team One at (202) 275-7992.

**Volume No. OP1-49**

Decided: February 3, 1983.

By the Commission, Review Board No. 1, Members Parker, Chandler and Fortier. Member Fortier not participating.

MC 621 (Sub-10), filed December 28, 1982. Applicant: PAUL ARPIN VAN LINES, INC., West Warwick Industrial Park, Box 1302, East Greenwich, RI 02818-0998. Representative: Alan F. Wohlstetter, 1700 K St., N.W. Washington, DC 20006, (202)-833-8884. Transporting *household goods,* between points in AZ, CA, ID and WY, on the one hand, and, on the other, points in the U.S. (except AK, HI and MT).

MC 2900 (Sub-462), filed January 25, 1983. Applicant: RYDER TRUCK LINES, INC., P.O. Box 2408, Jacksonville, FL 32203. Representative: S. E. Somers, Jr. (same address as applicant), (904) 353-3111. Transporting *general commodities* (except classes A and B explosives, household goods and commodities in bulk), between points in the U.S. (except AK and HI), under continuing contract(s) with Best Products Co., Inc., of Ashland, VA.

MC 47171 (Sub-226), filed January 27, 1983. Applicant: COOPER MOTOR LINES, INC., P.O. Box 2820, Greenville, SC 29602. Representative: Harris G. Andrews (same address as applicant), (803) 879-2101. Transporting *chemicals and related products,* between points in the U.S. (except AK and HI), under continuing contract(s) with Ashland Chemical Company, of Columbus, OH.

MC 65941 (Sub-68), filed January 27, 1983. Applicant: TOWER LINES, INC., P.O. Box 6010, Wheeling, WV 26003. Representative: J. Walter Morgan (same address as applicant), (304) 277-1000. Transporting *general commodities* (except classes A and B explosives and household goods), between points in the U.S. (except AK and HI), under continuing contract(s) with Thatcher Plastic Packaging, Inc., of Wheeling, WV.

MC 94901 (Sub-13), filed January 25, 1983. Applicant: EDDY MESSENGER SERVICE, INC., 31 Merritt Street, Port Chester, NY 10573. Representative: John L. Alfano, 550 Mamaroneck Ave., Harrison, NY 10528, (914) 835-4411. Transporting *general commodities* (except classes A and B explosives, commodities in bulk and household goods), between points in Dutchess, Orange, Putnam, Rockland, Sullivan, Ulster, and Westchester Counties, NY, and Fairfield County, CT, on the one hand, and, on the other, points in CT, DE, ME, MD, MA, NH, NJ, NY, PA, RI, VT, VA, and DC. Condition: The person or persons who appear to be engaged in common control of another regulated carrier must either (1) state that a petition has been filed under 49 U.S.C. 11343(e) seeking an exemption from the requirements of 49 U.S.C. 11343, (2) file an application under 49 U.S.C. 11343(A), or (3) submit an affidavit indicating why such approval is unnecessary, to the Secretary's office. In order to expedite issuance of any authority please submit a copy of this filing to Team 1, Room 2379.

MC 121600 (Sub-18), filed January 17, 1983. Applicant: AVERITT EXPRESS, INC., P.O. Box 3166, Cookeville, TN 38501. Representative: Robert L. Baker, Sixth Floor, United Southern Bank Bldg., Nashville, TN 37219, (615) 244-8100. Transporting *general commodities* (except classes A and B explosives, household goods, and commodities in bulk), between points in Walker County, GA, and points in the U.S. (except AK and HI).

Note.—Applicant seeks to tack the above sought rights with its existing regular-route operations.

MC 125951 (Sub-80), filed January 17, 1983. Applicant: SILVEY REFRIGERATED CARRIERS, INC., 3035 South 72nd Street, Suite 200, Omaha, NE 68124. Representative: Robert M. Cimino (same address as applicant), (402) 393-5005. Transporting *general commodities* (except Classes A and B explosives, commodities in bulk and household goods), between points in the U.S. (except AK and HI).

MC 128541 (Sub-4), filed January 20, 1983. Applicant: WESLEY WAYNE MACOMBER, d.b.a. W. W. MACOMBER TRUCKING, R.F.D. 1A, Pond Road, Gardiner, ME 04345. Representative: Wesley Wayne Macomber (same address as applicant), (207) 582-3543. Transporting *general commodities* (except Classes A and B explosives, household goods, and commodities in bulk), between those points in the U.S. in and east of a line beginning at the mouth of the Mississippi River, and extending along the Mississippi River to its junction with the western boundary of Itasca County, MN, then northward along the western boundaries of Itasca and Koochiching Counties, MN, to the international boundary line between the U.S. and Canada.

MC 129420 (Sub-8), (republication), filed December 8, 1982, previously noticed in the **Federal Register** issue of December 29, 1982. Applicant: LILE INTERNATIONAL COMPANIES, 15605 S.W. 72nd Ave., Tigard, OR 97223. Representative: Wendell B. Lile (same address as applicant), (503) 620-8480. Transporting *household goods, unaccompanied baggage and used automobiles,* between points in the U.S (except VT).

Note.—The purpose of this republication is to include AK and HI in the territorial description.

MC 147981 (Sub-3), filed January 24, 1983. Applicant: JACK CORNWELL TRANSPORTATION, P.O. Box 247, Norco, CA 91760. Representative: Foster L. Kent, P.O. Box 285, Council Bluffs, IA 51502, (712) 323-9124. Transporting *such commodities* as are dealt in or used by manufacturers of plastic foam products, between points in the U.S., under continuing contract(s) with Future Foam, Inc., of Anaheim, CA.

MC 148341 (Sub-7), filed January 27, 1983. Applicant: MASS TRANSIT, INC., 2450 Orange Ave., Signal Hill, CA 90806. Representative: Milton W. Flack, 8484 Wilshire Blvd., #840, Beverly Hills, CA 90211, (213) 655-3573. Transporting *general commodities* (except Classes A and B explosives, household goods and commodities in bulk), between points in the U.S. (except AK and HI).

MC 148960 (Sub-1), filed January 27, 1983. Applicant: ROBERT C. STOKES, d.b.a. STOKES TRUCKING, 35 W 160 Butterfield Road, Batavia, IL 60510. Representative: Albert A. Andrin, 180 North LaSalle Street, Chicago, IL 60601, (312) 332-5106. Transporting *general commodities* (except classes A and B explosives, commodities in bulk and household goods), between those points in the U.S. in and east of ND, SD, NE, KS, OK and TX.

MC 151251 (Sub-3), filed January 24, 1983. Applicant: NATIONWIDE CARTAGE SERVICE, INC., 5434 South Parkside Ave., Chicago, IL 60638. Representative: Anthony E. Young, Ltd., 29 South LaSalle Street, Suite 350, Chicago, IL 60603, (312) 782-8880. Transporting *general commodities* (except classes A and B explosives and household goods), between points in Lake, McHenry, Boone, DeKalb, Kane, DuPage, Cook, Will, Kendall, LaSalle, Grundy, and Kankakee Counties, IL, and Lake, Porter and LaPorte Counties, IN, on the one hand, and, on the other, those points in the U.S. in and east of ND, SD, NE, CO and NM.

MC 152310 (Sub-4), filed January 24, 1983. Applicant: M & M EQUIPMENT CO., INC., 24400 E. Alameda Ave., Aurora, CO 80011. Representative: Robert W. Wright, Jr., 5711 Ammons St., Arvada, CO 80002, (303) 424-1761. Transporting *general commodities* (except classes A and B explosives, household goods, and commodities in bulk), between points in the U.S. (except AK and HI).

MC 152950 (Sub-6), filed January 25, 1983. Applicant: CENTURY TRANSPORTATION CORP., P.O. Box 207, Columbus, MS 39703-0207. Representative: Lloyd R. Pate (same address as applicant), (601) 329-2121. Transporting *general commodities* (except classes A and B explosives, household goods and commodities in bulk), between points in the U.S. (except AK and HI), under continuing contract(s) with Fine Vines, Inc., of Greenville, MS, Napasco International, Inc., of Thibodaux, LA, Crysta-Pure Water Company, of Abita Springs, LA, Circus World Toy Stores, of Taylor, MI, and Sneed Oil Company, of Tupelo, MS.

MC 156340 (Sub-2), filed January 17, 1983. Applicant: VALLEY GRAIN CO., TRKG., P.O. Box 299, Browns Valley, MN 56219. Representative: Samuel Rubenstein, P.O. Box 5, Minneapolis, MN 5540, (612) 542-1121. Transporting *chemicals and related products*, between (1) points in Rice County, KS, on the one hand, and, on the other, points in IL, IA, MN, ND, and SD, and (2) points in Tooele County, UT, on the one hand, and, on the other, points in IL, IA, MN, NE, ND, and SD.

MC 160490, filed January 24, 1983. Applicant: HORACE T. HODGES, d.b.a. HODGES TRUCK LINE, P.O. Box 1528, Claremore, OK 74017. Representative: William P. Parker, P.O. Box 54657, Oklahoma City, OK 73154, (405) 434-3301. Transporting *metal products, machinery and mercer commodities, between points in OK, on the one hand, and, on the other, points in the U.S. (except AK and HI).*

MC 164741, filed January 13, 1983. Applicant: PRO-TRAN CARRIERS, LTD., P.O. Box 4020, R.R. No. 4, Inisfall, Alberta, Canada TOM 1A0. Representative: Frank Layden (same address as applicant), (403) 227-1560. Transporting *butane*, between points in Morton County, ND and Yellowstone County, MT, on the one hand, and, on the other, ports of entry on the international boundary line between the U.S. and Canada in ND and MT, under continuing contract(s) with Amoco Canada Petroleum Company, Ltd., of Calgary, Alberta, Canada. CONDITION: This certificate authorizes the transportation of a dangerous commodity and shall expire 5 years from its date of issuance.

Please direct status inquiries about the following to Team 3 at (202) 275-5223.

**Volume No. OP3-43**

Decided: February 3, 1983.

By the Commission, Review Board No. 2, Members Carleton, Williams and Ewing.

MC 1515 (Sub-324), filed January 10, 1983. Applicant: GREYHOUND LINE, INC., Greyhound Tower, Phoenix, AZ 85077. Representative: R. L. Wilson (same address as applicant), (602) 248-5000. Over regular routes, transporting *passengers*, (1) between junction port of entry on the International boundary line between the U.S. and Canada, at Interstate Hwy 5, and junction Interstate Hwy 5 and the WA-OR State line, over Interstate Hwy 5; (2) between junction Interstate Hwy 5 and Interstate Hwy 405 north of Seattle, WA, and junction Interstate Hwy 5 and Interstate Hwy 405 south of Seattle, WA, over Interstate Hwy 405; (3) between junction Interstate Hwy 5 and WA Hwy 520, and junction WA Hwy 520 and Interstate Hwy 405, over WA Hwy 520; (4) between Seattle, WA, and junction Interstate Hwy 90 and the WA-ID State line, over Interstate Hwy 90; (5) between Spokane, WA, and junction U.S. Hwy 195 and the WA-ID State line, over U.S. Hwy 195; (6) between junction Interstate Hwy 82 and Interstate Hwy 90, and junction WA Hwy 125 and the WA-OR State line: From junction Interstate Hwy 82 and Interstate Hwy 90 over Interstate Hwy 82 to junction U.S. Hwy 12, then over U.S. Hwy 12 to Walla Walla, WA, then over WA Hwy 125 to the WA-OR State line; (7) between Ritzville, WA, and junction U.S. Hwy 395 and the WA-OR State line, over U.S. Hwy 395; (8) between Pasco, WA, and junction WA Hwy 14 and the WA-OR State line, over WA Hwy 14; (9) between junction U.S. Hwy 101 and WA Hwy 20, and junction WA Hwy 104 and unnumbered WA Hwy: from junction U.S. Hwy 101 and WA Hwy 20 over U.S. Hwy 101 to junction WA Hwy 104, then over WA Hwy 104 to junction unnumbered WA Hwy; (10) between Longview, WA, and junction WA Hwy 433 and the WA-OR State line, over WA Hwy 433; (11) between junction Interstate Hwy 5 and the WA-OR State line, and junction Interstate Hwy 5 and the OR-CA State line, over Interstate Hwy 5; (12) between Portland, OR, and junction Interstate Hwy 84 and the OR-ID State line, over Interstate Hwy 84; (13) between Corvallis, OR and South Albany Junction, OR, over OR Hwy 34; (14) between Florence, OR, and Eugene, OR, over OR Hwy 126; (15) between junction U.S. Hwy 26 and OR Hwy 47, and junction OR Hwys 47 and 8, over OR Hwy 47; (16) between junction unnumbered OR hwy and the WA-OR State line, and Rainier, OR, over unnumbered OR hwy; (17) between junction Interstate Hwy 84 and the OR-ID State line, and junction ID-UT State line and Interstate Hwy 84, over Interstate Hwy 84; (18) between junction U.S. Hwy 20 and the MT-ID State line, and Idaho Falls, ID, over U.S. Hwy 20; (19) between Idaho Falls, ID and junction Interstate Hwy 15 and the ID-UT State line, over Interstate Hwy 15; (20) Between junction Interstate Hwys 84 and 86, and junction Interstate Hwys 86 and 15, over Interstate Hwy 86; (21) between junction U.S. Hwy 30 and Interstate Hwy 25, and junction Interstate Hwy 25 and the WY-Co State line, over Interstate Hwy 25; (22) between junction Interstate Hwy 80 and the UT-WY State line, and junction Interstate Hwy 80 and the WY-NE State line, over Interstate Hwy 80; (23) between junction Interstate Hwy 80 and the WY-NE State line, and junction the NE-IA State line and Interstate Hwy 80, over Interstate Hwy 80; (24) between junction Interstate Hwy 5 and the OR-CA State line, and junction Interstate Hwy 5 at the port of entry on the International boundary line between the U.S. and Mexico, over Interstate Hwy 5; (25) between junction Interstate Hwys 5 and 805, and San Ysidro, CA, over Interstate Hwy 805; (26) between junction U.S. Hwy 101 and the OR-CA State line, and Los Angeles, CA, over U.S. Hwy 101; (27) between junction Interstate Hwys 10 and 15, and junction Interstate Hwys 15 and 15E, over Interstate Hwy 15; (28) between junction Interstate Hwys 505 and 5, and junction Interstate Hwys 505 and 80, over Interstate Hwy 505; (29) between San Franisco, CA and junction Interstate Hwy 80 and the CA-NV State line, over Interstate Hwy 80; (30) between junction Interstate Hwys 80 and 880, west of Sacramento, CA, and junction Interstate Hwys 80 and 880, east of Sacramento, CA, over Interstate Hwy 880; (31) between Oakland, CA, and junction Interstate Hwys 580 and 5, over Interstate Hwy 580; (32) between junction Interstate Hwys 580 and 205, and junction Interstate Hwys 205 and 5, over Interstate Hwy 205; (33) between Santa Monica, CA, and junction Interstate Hwy 10 and the CA-AZ State line, over Interstate Hwy 10; (34) between San Bernardino, CA, and junction Interstate Hwy 15 and the CA-NV State line: From San Bernardino,

CA, over Interstate Hwy 15E to junction Interstate Hwy 15, then over Interstate Hwy 15 to the CA-NV State line; (35) between Barstow, CA and junction Interstate Hwy 40 and the CA-AZ State line, over Interstate Hwy 40; (36). between San Diego, CA, and junction the CA-AZ State line, and Interstate Hwy 8, over Interstate Hwy 8; (37) between San Bernardino, CA and San Diego, CA: from San Bernardino, CA, over Interstate Hwy 15 E to junction CA Hwy 91, then over CA Hwy 91 to junction Interstate Hwy 15, then over Interstate Hwy 15 to San Diego, CA; (38) between Bonsall, CA and junction CA Hwy 76 and Interstate Hwy 15, over CA Hwy 76; (39) between Vista, CA and junction Interstate Hwy 5, and CA Hwy 78, over CA Hwy 78; (40) between junction Interstate Hwy 80 and the CA-NV State line, and junction Interstate Hwy 80 and the NV-UT State line, over Interstate Hwy 80; (41) between junction Interstate Hwy 15 and the CA-NV State line, and junction Interstate Hwy 15 and the NV-AZ State line, over Interstate Hwy 15; (42) between junction Interstate Hwy 15 and the ID-UT State line, and junction Interstate Hwy 15 and the UT-AZ State line, over Interstate Hwy 15; (43) between junction Interstate Hwy 84 and the ID-UT State line, and junction Interstate Hwys 84 and 15, over Interstate Hwy 84; (44) between junction Interstate Hwys 15 and 84, and junction Interstate Hwys 84 and 80, over Interstate Hwy 84; (45) between junction Interstate Hwy 80 and the NV-UT State line, and junction Interstate Hwy 80 and the UT-WY State line, over Interstate Hwy 80; (46) between junction Interstate Hwy 25 and the WY-CO State line, and junction Interstate Hwy 25 and the CO-NM State line, over Interstate Hwy 25; (47) between Denver, CO, and junction Interstate Hwy 70 and the CO-KS State line, over Interstate Hwy 70; (48) between junction Interstate Hwy 70 and the CO-KS State line, and junction Interstate Hwy 70 and the KS-MO State line, over Interstate Hwy 70; (49) between junction Interstate Hwy 15 and the NV-AZ State line and junction Interstate Hwy 15 and the UT-AZ State line, over Interstate Hwy 15; (50) between junction Interstate Hwy 40 and the CA-AZ State line, and junction Interstate Hwy 40 and the AZ-NM State line, over Interstate Hwy 40; (51) between junction Interstate Hwy 10 and the CA-AZ State line, and junction Interstate Hwy 10 and the AZ-NM State line, over Interstate Hwy 10; (52) between junction Interstate Hwy 8 and the CA-AZ State line, and junction Interstate Hwys 8 and 10, over Interstate Hwy 8; (53) between Flagstaff, AZ, and Phoenix, AZ, over Interstate Hwy 17; (54) between junction Interstate Hwy 25 and the CO-NM State line, and Albuquerque, NM, over Interstate Hwy 25; (55) between junction Interstate Hwy 40 and the AZ-NM State line, and junction Interstate Hwy 40 and the NM-TX State line, over Interstate Hwy 40; (56) between junction Interstate Hwy 10 and the AZ-TX State line, and junction Interstate Hwy 10 and the NM-TX State line, over Interstate Hwy 10; (57) between junction Interstate Hwy 40 and the TX-OK State line, and Oklahoma City, OK, over Interstate Hwy 40; (58) between Oklahoma City, OK, and junction Interstate Hwy 44 and the OK-MO State line, over Interstate Hwy 44; (59) between Henryetta, OK, and junction Indian Nation Turnpike and the U.S. Hwy 270, over the Indian Nation Turnpike; (60) between Oklahoma City, OK, and junction Interstate Hwy 35 and the OK-TX State line, over Interstate Hwy 35; (61) between junction Interstate Hwy 55 and the MO-AR State line, and junction Interstate Hwys 55 and 40, over Interstate Hwy 55; (62) between junction Interstate Hwy 40 and the NM-TX State line, and junction Interstate Hwy 40 and the TX-OK State line, over Interstate Hwy 40; (63) between junction Interstate Hwy 10 and the NM-TX State line, and Ft. Stockton, TX, over Interstate Hwy 10; (64) between junction Interstate Hwys 10 and 20, and Dallas, TX, over Interstate Hwy 20; (65) between Ft. Worth, TX, and junction Interstate Hwy 30 and the TX-AR State line, over Interstate Hwy 30; (66) between San Antonio, TX and junction Interstate Hwy 10 and the TX-LA State line, over Interstate Hwy 10; (67) between junction Interstate Hwy 35 and the OK-TX State line, and Denton, TX, over Interstate Hwy 35; (68) between Denton, TX, and junction Interstate Hwys 35E and 35 north of Hillsboro, TX, over Interstate Hwy 35E; (69) between Ft. Worth, TX, and junction Interstate Hwys 35W and 35 north of Hillsboro, TX, over Interstate Hwy 35W; (70) between junction Interstate Hwys 35, 35E and 35W north of Hillsboro, TX, and Laredo, TX, over Interstate Hwy 35; (71) between San Antonio, TX and Corpus Christi, TX, over Interstate Hwy 37; (72) between Beaumont, TX, and Port Arthur, TX, over U.S. Hwys 69 and 287; (73) between Dayton, TX, and junction TX Hwy 146 and Interstate Hwy 10, over TX Hyw 146; (74) between junction Interstate Hwy 10 and the TX-LA State line, and Lake Charles, LA, over Interstate Hwy 10; (75) between junction Interstate Hwy 95 and the NY-CT State line, and junction Interstate Hwy 95 and the CT-RI State line, over Interstate Hwy 95; (76) between junction Interstate Hwy 84 and the NY-CT State line, and junction the CT-MA State line and Interstate Hwy 86: from junction the NY-CT State line and Interstate Hwy 84 over Interstate Hwy 84 to Hartford, CT, then over Interstate Hwy 86 to the CT-MA State Line; (77) between junction the CT-MA State line and Interstate Hwy 91, and New Haven, CT, over Interstate Hwy 91; (78) between junction Interstate Hwy 84 and CT Hwy 72, and junction Interstate Hwy 91 and CT Hwy 15: from junction Interstate Hwy 84 and CT Hwy 72 over CT Hwy 72 to junction U.S. Hwy 5, then over U.S. Hwy 5 to junction Interstate Hwy 91; (79) between junction the MD-DE State line and Interstate Hwy 95, and junction the DE-PA State line and Interstate Hwy 95, over Interstate Hwy 95; (80) between junction the MD-DE State line and U.S. Hwy 13, and junction the DE-PA State line and U.S. Hwy 13, over U.S. Hwy 13; (81) between junction U.S. Hwy 40 and the MD-DE State line, and junction U.S. Hwy 40 and the DE-N State line, over U.S. Hwy 40; (82) between junction Interstate Hwys 95, 295 and 495, and junction Interstate Hwys 495 and 95, over Interstate Hwy 495; (83) between junction the NH-ME State line and Interstate Hwy 95, and Bangor, ME, over Interstate Hwy 95; (84) between Bangor, ME, and Ellsworth, ME, over Alternate U.S. Hwy 1; (85) between Ellsworth, ME, and Calais, ME, over U.S. Hwy 1; (86) between Ellsworth, ME, and Bar Harbor, ME, over ME Hwy 3; (87) between junction the ME-NH State line and U.S. Hwy 1, and Bangor, ME: from junction ME-NH State line and U.S. Hwy 1 over U.S. Hwy 1 to junction Alternate U.S. Hwy 1, then over Alternate U.S. Hwy 1 to Bangor, ME; (88) between Portland, ME, and Augusta, ME, over the ME Turnpike; (89) between Lewiston, ME and Augusta, ME, over U.S. Hwy 202; (90) between junction the RI-MA State line and Interstate Hwy 95, and junction the MA-NH State line and Interstate Hwy 95, over Interstate Hwy 95; (91) between junction the NY-MA State line and Interstate Hwy 90, and Boston, MA, over Interstate Hwy 90; (92) between junction the NY-MA State line and U.S. Hwy 20, and junction U.S. Hwy 20 and Interstate Hwy 90, over U.S. Hwy 20; (93) between junction the CT-MA State line and Interstate Hwy 91, and Springfield, MA, over Interstate Hwy 91; (94) between junction the CT-MA State line and Interstate Hwy 86, and junction Interstate Hwys 86 and 90, over Interstate Hwy 86; (95) between junction Interstate Hwys 90 and 290, and junction Interstate Hwys 495 and 95: from

junction Interstate Hwys 90 and 290 over Interstate Hwy 290 to junction Interstate Hwy 495, then over Interstate Hwy 495 to junction Interstate Hwy 95 near the MA–NH State line; (96) between junction Interstate Hwy 95 and MA Hwy 113, and Newburyport, MA, over MA Hwy 113, over MA Hwy 113; (97) between Worcester, MA and junction Interstate Hwy 90 and unnumbered hwy: from Worcester, MA over MA Hwy 122 to junction unnumbered hwy, then over unnumbered hwy to junction Interstate Hwy 90; (98) between junction the MA–NH State line and Interstate Hwy 95, and junction the NH–ME State line and Interstate Hwy 95, over Interstate Hwy 95; (99) between junction the CT–RI State line and Interstate Hwy 95, and junction the RI–MA State line and Interstate Hwy 95, over Interstate Hwy 95; (100) between junction Interstate Hwy 95 and RI Hwy 138, and Newport, RI: from junction Interstate Hwy 95 and RI Hwy 138 over RI Hwy 138 to junction U.S. Hwy 1, then over U.S. Hwy 1 to RI Hwy 138, then over RI Hwy 138 to Newport, RI; (101) between port of entry on the International boundary line between the U.S. and Canada at Interstate Hwy 89, and Burlington, VT, over Interstate Hwy 89; (102) between junction the MD–VA State line and Interstate Hwy 95, and junction the MD–DE State line and Interstate Hwy 95, over Interstate Hwy 95; (103) between junction U.S. Hwy 13 and the MD–DE State line, and junction U.S. Hwy 13 and the MD–VA State line, over U.S. Hwy 13; (104) between junction the MD–PA State line and U.S. Hwy 40, and junction the MD–DE State line and U.S. Hwy 40, over U.S. Hwy 40; (105) between junction U.S. Hwy 48 and the MD–WV State line, and Cumberland, MD, over U.S. Hwy 48, (106) between junction the MD–PA State line and Interstate Hwy 81, and junction Interstate Hwys 70 and 81, over Interstate Hwy 81; (107) between junction the MD–PA State line and Interstate Hwy 70, and Baltimore, MD, over Interstate Hwy 70; (108) between Frederick, MD and junction Interstate Hwys 495 and 95: from Frederick over Interstate Hwy 270 to junction Interstate Hwy 495, then over Interstate Hwy 495 to junction Interstate Hwy 95; (109) between junction Interstate Hwy 495 and U.S. Hwy 29, and junction U.S. Hwy 29 and the MD–DC State line, over U.S. Hwy 29; (110) between junction Interstate Hwy 495 and MD Hwy 97, and junction MD Hwy 97 and U.S. Hwy 29, over MD Hwy 97; (111) between junction Interstate Hwy 270 and spur Interstate Hwy 270, and junction MD Hwy 190 and the MD–DC State line: from junction Interstate Hwy 270 and spur Interstate Hwy 270 over spur Interstate Hwy 270 to junction Interstate Hwy 495, then over Interstate Hwy 495 to junction MD Hwy 190, then over MD Hwy 190 to the MD–DC State line; (112) between Washington, DC, and Baltimore, MD: from Washington, DC over U.S. Hwy 50 to junction Baltimore-Washington Parkway, then over the Baltimore-Washington Parkway to Baltimore, MD; (113) between Baltimore, MD, and junction Interstate Hwy 83 and the MD–PA State line, over Interstate Hwy 83; and (114) between junction Baltimore-Washington Parkway and MD Hwy 197, and junction MD Hwy 198 and Baltimore-Washington Parkway: from junction Baltimore-Washington Parkway and MD Hwy 197 over MD Hwy 197 to Laurel, MD, then over MD Hwy 198 to junction the Baltimore-Washington Parkway, serving all intermediate points in the above routes.

Note.—Applicant intends to tack this authority with its existing authority. Applicant seeks to provide regular-route service in interstate or foreign commerce and in intrastate commerce under 49 U.S.C. 10922(c)(2)(B) over the same route.

MC 1515 (Sub-326), filed January 11, 1983. Applicant: GREYHOUND LINES, INC., Greyhound Tower, Phoenix, AZ 85077. Representative: L. J. Celmins (same address as applicant) (602) 248–2942. Over regular routes, transporting *passengers,* (1) between Mobile, AL and New Orleans, LA, serving the off-route points of Pascagoula, Biloxi, Gulfport and Bay St. Louis, MS, and Slidell, over Interstate Hwy 10; (2) between Nashville, TN and Mobile, AL, serving the off-route points of Columbia, TN, and Athens, Deca, Hartselle, Cullman, Calera, Clanton, Greenville, Georgiana, Evergreen, Atmore, and Bay Minnette, AL over Interstate Hwy 65; (3) between Birmingham, AL and New Orleans, LA, serving the off-route points of Eutaw, Livingston, and York, AL, Poplarville and Picayune, MS, and Slidell, LA: from Birmingham over Interstate Hwy 59 to junction Interstate Hwy 10, then over Interstate Hwy 10 to New Orleans; (4) between New Orleans, LA and Memphis, TN, serving the off-route points of Hammond, Amite, and Kentwood, LA, and McComb, Brookhaven, Hazelhurst, Canton, Winona, and Grenada, MS: from New Orleans over Interstate Hwy 10 to junction Interstate Hwy 55, then over Interstate Hwy 55 to Memphis; (5) between Eutaw, AL and Demopolis, AL, over U.S. Hwy 43; (6) between Jasper, and Haleyville, AL, over AL Hwy 5; (7) between Greenhill, AL and Florence, AL: from Greenhill over new U.S. Hwy 43 to junction U.S. Hwy 72, then over U.S. Hwy 72 to Florence; (8) between Anniston, AL and Athens, AL: from Anniston over U.S. Hwy 431 to junction U.S. Hwy 72, then over U.S. Hwy 72 to Athens; and (9) between Decatur, AL and Murfreesboro, TN: from Decatur over Alternate U.S. Hwy 72 to junction U.S. Hwy 231, then over U.S. Hwy 231 to Murfreesboro, serving all intermediate points in the above routes.

Note.—(1) Applicant intends to tack this authority with its existing authority.

(2) Applicant seeks to provide regular-route service in interstate or foreign commerce and in intrastate commerce under 49 U.S.C. 10922(c)(2)(B) over the same routes.

MC 1515 (Sub-327), filed January 11, 1983. Applicant: GREYHOUND LINES, INC., Greyhound Tower, Phoenix, AZ 85077. Representative: L. J. Celmins (same address as applicant) (602) 248–2942. Over regular routes, transporting *passengers,* (1) between Petersburg, VA and junction Interstate Hwys 95 and 16, over Interstate Hwy 95, serving the off-route points of Rocky Mount, Wilson, Smithfield, Benson, Dunn, Fayetteville and Lumberton, NC, and Florence, Walterboro and Manning, SC; (2) between Rocky Mount, NC and Goldsboro, NC from Rocky Mount over U.S. Hwy 301 to junction U.S. Hwy 117, then over U.S. Hwy 117 to Goldsboro; (3) between Wilson, NC and junction U.S. Hwy 301 and Interstate Hwy 95, over U.S. Hwy 301; (4) between Lillington, NC, and Ft. Bragg, NC, over NC Hwy 210; (5) between Rocky Mount, NC and Asheville, NC, serving the off-route points of Mocksville and Black Mountain, NC: from Rocky Mount over U.S. Hwy 64 to Raleigh, NC, then over Interstate Hwy 40 to Durham, NC, then over Interstate Hwy 85 to Greensboro, NC, then over Interstate Hwy 40 to Asheville; (6) between Asheville, NC and Hendersonville, NC: from Asheville over Interstate Hwy 26 to junction U.S. Hwy 64, then over U.S. Hwy 64 to Hendersonville; (7) between Raleigh, NC, and Dunn, NC: from Raleigh over NC Hwy 50 to junction U.S. Hwy 301, then over U.S. Hwy 301 to Dunn (8) between Greensboro, NC and Charlotte, NC, over Interstate Hwy 85 or U.S. Hwy 29; (9) between Charlotte, NC, and Greenville, SC, serving the off-route points of Gaffney and Spartanburg, SC, over Interstate Hwy 85; (10) between Greenville, SC and Charleston, SC, serving the off-route points of Laurens, Clinton, Newberry, Columbia, Orangeburg, Summerville, and North Charleston, SC: from Greenville over U.S. Hwy 276 to junction Interstate Hwy 26, then over Interstate Hwy 26 to Charleston; (11) between Charlotte, NC

and Columbia, SC, serving the off-route point of Rock Hill, SC, over Interstate Hwy 77; (12) between Florence, SC, and Augusta, GA serving the off-route points of Bishopville, Camden, Columbia, Lexington, and Aiken, SC: from Florence over Interstate Hwy 20 to junction U.S. Hwy 25, then over U.S. Hwy 25 to Augusta; and (13) between Florence, SC, and Conway, SC: from Florence over U.S. Hwy 76 to junction U.S. Hwy 501, then over U.S. Hwy 501 to Conway, serving all intermediate points in the above routes.

Note.—Applicant intends to tack this authority with its existing authority. Applicant seeks to provide regular-route service in interstate or foreign commerce and in intrastate commerce under 49 U.S.C. 10922(c)(2)(B) over the same route.

MC 2934 (Sub-127), filed January 17, 1983. Applicant: AERO MAYFLOWER TRANSIT COMPANY, INC., 9998 North Michigan Rd., Carmel, IN 46032. Representative: W. G. Lowry (same address as applicant) (317) 975–1142. Transporting *Household goods* and *electronic equipment*, between points in the U.S. (except AK and HI), under continuing contract(s) with Paradyne Corporation, of Largo, FL.

MC 158995, filed January 10, 1983. Applicant: SCHUYLKILL VALLEY COAL LINES, INC., W. Water St., Mahanoy Plane, PA 17949. Representative: John M. Quain, 221 Upper Valley Rd. North Wales, PA 19454 (215) 699–3777. Transporting (1) *Coal*, between points in PA, NY, NJ, NH, RI, MA, CT and VT and (2) *general commodities*, (except classes A and B explosives and household goods), between points in NY, NJ, NH, RI, MA, CT and VT, on the one hand, and, on the other, points in PA.

Please direct status inquiries about the following to Team 4 at (202) 275–7669.

**Volume No. OP4–67**

Decided: February 3, 1983.

By the Commission, Review Board No. 2, Members Carleton, Williams, and Ewing.

MC 141357, (Sub-12), filed January 25, 1983. Applicant: SHANUS, INC., 232 1st St. North, Minneapolis, MN 55401. Representative: Samuel Rubenstein, P.O. Box 5, Minneapolis, MN 55440 (612) 542–1121. Transporting *commodities in bulk*, between Minneapolis, MN, on the one hand, and, on the other, points in ND, SD, WI, and LA.

MC 145246, (Sub-4), filed January 25, 1983. Applicant: A. E. SCHULTZ CORPORATION, 901 Lyndale Ave., Neenah, WI 54956. Representative: Frank M. Coyne, 25 West Main St., Madison WI 53703 (608) 255–1388. Transporting *chemicals and related products*, between points in Winnebago County, WI, on the one hand, and, on the other, points in WI, MN, and the Upper Peninsula of MI.

MC 165596, filed January 10, 1983. Applicant: ATLANTIC OVERLAND, INC., 12 Elm St., Rockland, ME 04841. Representative: John M. Kinnealey (same address as applicant) (207) 594–5935. Transporting *meats, meat products and frozen foods*, between Boston, MA, on the one hand, and, on the other, points in NY, ME, NH, VT, RI, and CT.

MC 165927, filed January 27, 1983. Applicant: JAMES MAGEE d.b.a. MAGEE'S AUTOMOTIVE, Route 1, Afton, WY 83110. Representative: James Magee (Same address as applicant) (307) 889–3889. Transporting *transportation equipment*, between points in ID, MT, UT, and WY.

Please direct status inquiries about the Following to team 5, (202) 275–7289.

**Volume No. OP5–43**

Decided: January 31, 1983.

By the Commission on, Review Board No. 3, Members Krock, Joyce and Dowell.

MC 20968 (Sub-3), filed January 21, 1983. Applicant: IMLACH MOVERS, INC., 28175 Fort St., Trenton, MI 58183. Representative: Robert J. Gallagher, 1000 Connecticut Ave., NW., Suite 1200 Washington, DC 20036 (202) 785–0024. Transporting *general commodities* (except classes A and B explosives and commodities in bulk), between points in the U.S., under continuing contract(s) with K Mart Corporation, of Troy, MI.

MC 79658 (Sub-50), filed January 24, 1983. Applicant: ATLAS VAN LINES, INC., 1212 St. George Road, P.O. Box 509, Evansville, IN 47711. Representative: Robert C. Mills (Same address as applicant) (812) 424–2222. Transporting *household goods*, between points in the U.S., under continuing contract(s) with State Farm Mutual Automobile Insurance Companies, of Bloomington, IL.

MC 123329 (Sub-63), filed January 19, 1983. Applicant: H. M. TRIMBLE & SONS LTD., P.O. Box 3500 Calgary, Alberta, Canada T2P 2P9. Representative: Edward J. Kiley, 1730 M Street, N.W., Suite 501 Washington, DC 20036 (202) 296–2900. Transporting *general commodities* (except classes A and B explosives, household goods and commodities in bulk), between ports of entry on the international boundary line between the United States and Canada, on the one hand, and, on the other, points in AZ, AR, CA, CO, ID, IL, IA, KS, KY, LA, MN, MS, MO, MT, NE, NV, NM, ND, OK, OR, SD, TN, TX, UT, WA, WI, and WY.

MC 138758 (Sub-7), filed January 21, 1983. Applicant: SHEFFIELD POTATO CO., INC. d.b.a. NORTHERN GAS TRANSPORT CO., Lyndonville, VT 05851. Representative: John P. Monte, P.O. Box 686 Barre, VT 05641 (802) 476–6671. Transporting *propane* between ports of entry on the international boundary line between the United States and Canada in ME, NH, NY, and VT, on the one hand, and, on the other, points in ME.

MC 140149 (Sub-8), filed December 28, 1982. Applicant: M.C. BUNCH, INC., Route 1–Box 52, Lake City, AR 72427. Representative: Don Garrison, P.O. Box 1065, Fayetteville, AR 72702, 501–521–8121. Transporting *general commodities* (except casses A and B explosives, household goods, and commodities in bulk) between points in the U.S. (except AK and HI), under continuing contract(s) with Charles McAlpin Brokerage, Inc., of Decatur, AL.

MC 147579 (Sub-3), filed January 21, 1983. Applicant: MILLER EXPRESS FREIGHT, INC., 205 Lima Ave., P.O. Box 1230, Findlay, OH 45840. Representative: James M. Burtch, 100 East Broad St., Columbus, OH 43215, (614) 228–1541. Transporting *general commodities* (except classes A and B explosives, household goods, and commodities in bulk), between points in Hancock County, OH, on the one hand, and, on the other, points in IN, IL, KY, MI, PA, TN, and WV.

MC 150909 (Sub-2), filed January 6, 1983. Applicant: HEBERT BROS, Route 1, Madawaska, ME 04756. Representative: John C. Lightbody, 30 Exchange St., Portland, ME 04101, 207–773–5651. Transporting *general commodities* (except classes A and B explosives, and household goods), between points in the U.S. (except AK and HI), under continuing contract(s) with NAPA New England of Wilmington, MA; Agway, Inc. of Caribou, ME; and Fraser Paper Limited, of Madawaska, ME.

MC 154158 (Sub-3), filed January 21, 1983. Applicant: KINNEY TRUCK LINE, INC., 124 West Willis Avenue, Perry, IA 50220. Representative: Steven C. Schoenebaum, 1100 Carriers Bldg., 601 Locust, Des Moines, IA 50309 (515) 283–2076. Transporting *agricultural implement parts*, between points in Dallas County, IA, on the one hand, and on the other, points in CO, IL, IN, KY, MI, MO, NY, OH, PA, and WI.

MC 156029 (Sub-3), filed January 21, 1983. Applicant: TRANSPORT ENTERPRISES, INC., P.O. Box 311, Freehold, NJ 07728. Representative: Ronald I. Shapss, 450 Seventh Ave.,

New York, NY 10123. (212) 239–4610. Transporting *food and related products* between points in the U.S. (except AK and HI).

MC 165838, filed January 21, 1983. Applicant: HAYES TRANSPORT, INC., 2746 Spring Rose Circle, Verona, WI 53952. Representative: Foster L. Kent, P.O. Box 285, Council Bluffs, IA 51502 (712) 323–9124. Transporting *food and related products,* between Chicago, IL, and points in Oneida County, NY, Warren County, NJ, Lancaster County, PA and Jefferson County, WI, on the one hand, and, on the other, points in CT, IL, IN, IA, KY, MA, MI, MN, MO, NJ, NY, OH, PA, TX and WI.

**Volume No. Op5–50**

Decided: February 2, 1983.

By the Commission, Review Board No. 3, Members Krock, Joyce and Dowell.

MC 134958 (Sub-12), filed January 25, 1983. Applicant: HAMS EXPRESS, INC., 3499 S. Third St., Philadelphia, PA 19148. Representative: David M. Schwartz, 1025 Connecticut Ave., NW., Washington, DC 20036 (202) 775–8190. Transporting *general commodities* (except classes A and B explosives, household goods and commodities in bulk), between points in the U.S. (except AK and HI).

MC 141758 (Sub-21), filed January 24, 1983. Applicant: LYDALL EXPRESS, INC., 615 Parker Ave., Manchester, CT 06040. Representative: Robert J. Dunbar (same address as applicant) 203–646–1233. Transporting *newsprint,* between points in the U.S. (except AK and HI), under continuing contract(s) with Bear Island Paper Company of Greenwich, CT.

MC 144918 (Sub-3), filed January 24, 1983. Applicant: J. P. JENKS, INC., P.O. Box 585, RD 3, Geneva, OH 44041. Representative: Lewis S. Witherspoon, 2455 North Star Rd., Columbus, OH 43221, 614–486–0448. Transporting *general commodities* (except classes A and B explosives, household goods, and commodities in bulk), between points in the U.S. (except AK and HI).

MC 150768 (Sub-2), filed January 20, 1983. Applicant: EAGLE FURNITURE CORP, d. b. a. GREENWOOD CARRIERS, INC., Rte. 5, Box 330, Cookeville, TN 38501. Representative: Henry E. Seaton, 1024 Pennsylvania Bldg., 425 13th St., N.W., Washington, DC 20004, 202–347–8862. Transporting *general commodities* (except classes A and B explosives, household goods, and commodities in bulk), between points in Putnam County, TN, on the one hand, and, on the other, those points in the U.S. in and east of ND, SD, NE, KS, OK, and TX.

MC 155079, filed January 24, 1983. Applicant: CURTIS L. DODGINS, INC., Route 1, Box 393, Franklin, NC 28734. Representative: William P. Farthing, Jr., 1100 Cameron-Brown Bldg., Charlotte, NC 28204, 704–372–6730. Transporting *furniture and fixtures,* between points in Stephens County, GA, on the one hand, on the other, points in the U.S. (except AK and HI).

MC 165849, filed January 25, 1983. Applicant: PETER D. PIGULA, d.b.a. P&L TRANSPORT, 219 F. Grenadier Dr., Liverpool, NY 13088. Representative: Peter D. Pigula (same address as applicant) (315) 622–2123. Transporting *petroleum products,* between points in NY and PA.

Agatha L. Mergenovich,

*Secretary.*

[FR Doc. 83–3575 Filed 2–9–83; 8:45 am]

BILLING CODE 7035–01–M

---

**[Docket No. AB–6 (Sub-133)]**

## Rail Carriers; Burlington Northern Railroad Company—Abandonment—In Spokane and Whitman Counties, WA; Findings

The Commission has issued a certificate authorizing the Burlington Northern Railroad Company to abandon its line of railroad known as the Spring Valley to Fairbanks, WA, line extending from railroad milepost 40.00 near Spring Valley, to railroad milepost 45.68, at the end of the line, near Fairbanks, WA, a distance of 5.68 miles to Spokane and Whitman Counties, WA. The abandonment certificate will become effective 30 days after this publication unless the Commission also finds that: (1) A financially responsible person has offered financial assistance (through subsidy or purchase) to enable the rail service to be continued; and (2) it is likely that the assistance would fully compensate the railroad.

Any financial assistance offer must be filed with the Commission and served concurrently on the applicant, with copies to Mr. Louis E. Gitomer, Room 5417, Interstate Commerce Commission, Washington, DC 20423, no later than 10 days from publication of this Notice. Any offer previously made must be remade within this 10 day period.

Information and procedures regarding financial assistance for continued rail service are contained in 49 U.S.C. 10905 and 49 CFR 1152.27 (formerly 49 CFR 121.38).

Agatha L. Mergenovich,

*Secretary.*

[FR Doc. 83–3576 Filed 2–9–83; 8:45 am]

BILLING CODE 7035–01–M

---

**[Finance Docket No. 30098]**

## Rail Carriers; Consolidated Rail Corp. and Southern Railway Co.; Exemption From 49 U.S.C. 11343

**AGENCY:** Interstate Commerce Commission.

**ACTION:** Notice of exemption.

**SUMMARY:** The Interstate Commerce Commission exempts from the requirement of prior approval under 49 U.S.C. 11343 the purchase by Southern Railway Company of a 4.6-mile segment of track from Consolidated Rail Corporation (Conrail) between mileposts 127.4 and 132.0 in Wabash County, IL, and Conrail's acquisition of trackage rights over the same line segment, subject to standard labor protection.

**DATES:** This exemption will be effective on February 10, 1983. Petitions to reopen must be filed by March 2, 1983.

**ADDRESSES:** Sending pleadings to: (1) Rail Section, Room 5349, Interstate Commerce Commission, Washington, DC 20423

(2) Petitioner's representatives: Charles E. Mechem, Consolidated Rail Corporation, Six Penn Center Plaza, Philadelphia, PA 19104

Nancy S. Fleischman, Southern Railway Company, P.O. Box 1808, Washington, DC 20013.

**FOR FURTHER INFORMATION CONTACT:** Louis E. Gitomer, (202) 275–7245.

**SUPPLEMENTARY INFORMATION:** Additional information is contained in the Commission's decision. To purchase a copy of the full decision contact: TS Infosystems, Inc., Room 2227, 12th & Constitution Avenue NW., Washington, DC 20423, (202) 289–4357—DC metropolitan area (800) 424–5403—Toll free for outside the DC area.

Decided: February 1, 1983.

By the Commission, Chairman Taylor, Vice Chairman Sterrett, Commissioners Gilliam, Andre, Simmons, and Gradison. Commissioner Gilliam did not participate.

Agatha L. Mergenovich.

*Secretary.*

[FR Doc. 83–3577 Filed 2–9–83; 8:45 am]

BILLING CODE 7035–01–M

[Ex Parte No. 346; Sub-15]

## Exemption From Regulation—Rail Transportation Frozen Food

**AGENCY:** Interstate Commerce Commission.

**ACTION:** Notice of Proposed Exemption.

**SUMMARY:** Union Pacific Railroad Company has petitioned the Commission to exempt from regulation under 49 U.S.C. 10505 the rail transportation of frozen foods. The purpose of this exemption is to provide the railroads full flexibility to compete with motor carriage which controls the predominant share of traffic in frozen foods, and to allow the railroads to respond to shippers' needs by adjusting rates to reflect market fluctuations and changes in competitors' rates.

**DATES:** Comments are due March 14, 1983.

**COMMENTS:** Send comments to: Ex Parte No. 346 (Sub-No. 15), Rail Section, Room 5344, Interstate Commerce Commission, Washington, D.C. 20423.

**FOR FURTHER INFORMATION CONTACT:**

Louis E. Gitomer (202) 275-7245
or
Gerald Proger (202) 275-5957

**SUPPLEMENTARY INFORMATION:** Additional information is contained in the Commission's decision. To purchase a copy of the full decision contact: TS Infosystems, Inc., Room 2227, 12th and Constitution Ave., NW., Washington, DC 20423 (202) 289-4357, DC metropolitan area (800) 424-5403, Toll free for outside the DC area.

Decided: February 3, 1983.

By the Commission, Chairman Taylor, Vice Chairman Sterrett, Commissioners Gilliam, Andre, Simmons, and Gradison. Commissioner Gilliam did not participate.

**Agatha L. Mergenovich,**

*Secretary.*

[FR Doc. 83-3646 Filed 2-8-83; 8:45 am]

BILLING CODE 7035-1-M

## NATIONAL LABOR RELATIONS BOARD

### Discontinuance of Preparation of Subject Matter Classified Index to General Counsel Decisions Having No Precedential Significance

Notice is hereby given under the provisions of Section (a)(2) of the Freedom of Information Act (5 U.S.C. 552(a)(2) that the General Counsel of the National Labor Relations Board has determined that it is unnecessary and impracticable to continue to classify and index those of his decisions not to issue a complaint on unfair labor practice charges where the reason for the decision was that there was insufficient evidence to support the charge.

Since 1975 the General Counsel has been classifying on a subject matter classification outline all of the decisions of his office not to issue a complaint on charges of unfair labor practices filed with the Regional Offices of the Agency. The final decisions of that nature, whether by a regional director, by the Office of Appeals, or by the Division of Advice, which are based upon a determination that "there has been no violation of the National Labor Relations Act" (Section 101.5, NLRB Statements of Procedure, Series 8, as amended, 29 CFR 101.5), are indexed in the publication entitled "Classified Index to Dispositions of ULP Charges by the General Counsel of the National Labor Relations Board." That classified index is published and made available for purchase upon subscription from the Superintendent of Documents, Government Printing Office, in accordance with the requirements of 5 U.S.C. 552(a)(2), and neither its contents, its coverage, nor its continued publication are to be altered or affected by this notice.

Final decisions of the regional directors or the Office of Appeals not to issue a complaint, which are based upon a determination that the evidence established by the investigation "is insufficient to substantiate the charge" (Section 101.5, NLRB Statements of Procedure, Series 8, as amended, 29 CFR 101.5), are classified and the citations are separately assembled in published index format in a prepared "Table of Cases in Which the General Counsel of the National Labor Relations Board Refused To Issue a Complaint on ULP Charges Because of Insufficient Evidence." Although this table of cases has heretofore been fully assembled in page galley ready for publication, it has not been published or offered for sale. By notice published in the **Federal Register** on May 20, 1976 (41 FR 20740-20741), the General Counsel advised the public of his determination that, although the table of cases would be prepared and would be available to the public for inspection and copying, it would not be printed and offered for sale.[1] In explaining that determination the General Counsel stated (41 FR 20740-20741):

> The basis for the conclusion that publication of the above described "Table of Appeals Cases" is unnecessary and impracticable is that the refusal to issue complaint because a charge is not supported by sufficient evidence provides little or no information concerning the action which might be taken by the General Counsel were the allegations of the charges supported by evidence, and provides little guidance to parties and the public concerning the probable disposition of other charges. In these circumstances, the public interest would not be served by expanding public funds to print and distribute that table.

Subsequent events have demonstrated that the doubt and concern of the General Counsel about the value to the public or practitioners of a subject matter index to decisions dismissing charges because of insufficient evidence was completely justified. During the more than 7 years that this table of cases has been publicly available, there has not been a single request from the public to see the index, nor any expression of interest in obtaining access to any subject matter category of the documents indexed on the table. The General Counsel views this lack of interest as wholly persuasive public confirmation of his view that the final decisions dismissing ULP charges because of insufficient evidence lack value as precedent and are of no appreciable value to the public in helping it to understand how the General Counsel's Office operates. Under these circumstances, there is no compelling obligation under the Freedom of Information Act to prepare an index to decisions of that nature. See 5 U.S.C. 552(a)(2): "Attorney General's Memorandum on the Public Information Section of the Administrative Procedure Act," U.S. Department of Justice, June 1967, pp. 20-22.

A further consideration supporting the decision to discontinue preparation of the table of cases is the substantial cost to the Agency incurred by its preparation, without any discernible benefit to the public or to the Agency. Under the present volume of final decisions, the classification of decisions for the table of cases index, and the preparation of that index, involve a cost to the Agency of over $70,000 per year. The expenditure of those funds for this purpose cannot readily be justified.

In the absence of a clear statutory obligation to prepare an index to dismissals of charges for insufficient evidence, or the demonstration of a significant public interest is a subject matter index to such decisions, and in consideration of the substantial cost to

[1] The publication at that time did not yet include decisions of the regional directors and was therefore referred to as the "Table of Appeals Cases." The regional directors decisions were subsequently included on a retrospective bases.

the Agency in staff resources and funds without discernible benefit to the public, the General Counsel has determined that the classification of the documents and the preparation of the table of cases in publication format is not of benefit to the public and should be discontinued. Therefore, effective immediately, no further effort or funds will be expended by this Agency in the subject matter classification of final orders dismissing ULP charges because of insufficient evidence, or in the preparation of the "Table of Cases in Which the General Counsel of the National Labor Relations Board Refused To Issue Complaint on ULP Charges Because of Insufficient Evidence."

**FOR FURTHER INFORMATION CONTACT:** Standau E. Weinbrecht, Assistant General Counsel, 1717 Pennsylvania Avenue, NW., Room 1100, Washington, D.C. 20570, Telephone: (202) 254-9350.

Dated: February 2, 1983.

**William L. Lubbers,**

*General Counsel, National Labor Relations Board.*

[FR Doc. 83-3588 Filed 2-9-83; 8:45 am]

BILLING CODE 7545-01-M

## NATIONAL TRANSPORTATION SAFETY BOARD

### Responses; Availability

**Recommendation Responses from:**

**Pipeline**—*Arizona Public Service Company: Nov. 12: P-76-17:* Determined the number of similar plastic pipe compression coupling installations and excavated a statistically representative sample of these to determine if they had been installed correctly. *P-76-18:* Based upon a review of existing construction standards and coupled with its decision to discontinue use of the subject couplings, new installation construction standards are not needed.

*The Pipelines of Puerto Rico, Inc: Nov. 18: P-80-75,* regarding pipeline emergencies, and *P-80-79,* regarding the establishment of an island-wide "one-call" excavation notification system: Requested the Public Service Commission of Puerto Rico to call for a meeting of all parties that may, at some time, perform work that could interfere with pipeline systems. *P-80-76:* Updated the list of parties to be contacted in an emergency and instituted a procedure to insure that the list is updated at least annually. *P-80-77:* Installed additional permanent pipeline markers sufficient to comply with 49 CFR 195.410. *P-80-78:* Installed new pipeline identification labels on permanent markers in accordance with 49 CFR 195.410(a)(2). *P-80-80:* Instructed its pipeline inspectors of the importance of remaining at the construction site and closely monitoring the contractor's work as it approaches the pipeline.

*Puerto Rico Telephone Company: Dec. 15: P-80-88:* Has not been successful in implementing the recommendation to establish an island-wide "one-call" excavation notification system in Puerto Rico on a voluntary basis among owners or operators. Excavation permits issued by the pertinent government agency, with the condition that the excavator must notify owners or operators of their planned excavations, together with proper legislation is being promoted.

*U.S. Department of Labor: Nov. 18: P-73-5:* Is developing a proposal to revise completely the OSHA construction standards regarding trenching and excavation operations. The proposal will address the need to determine correctly the location of underground utilities. *P-78-79:* Has started a comprehensive review of OSHA personal protective equipment standards for which additional data and recommended performance criteria for clothing worn by workers in various occupations will be developed.

*The Peoples Natural Gas Company: Nov. 19: P-79-35 and -36:* Conducted an instrument leak survey of the gas main identified on the company records as P-670, and conducted a complete corrosion survey over the entire 12-inch bare steel gas main. *P-79-37:* Any defects disclosed by these surveys were promptly corrected at the conclusion of the surveys.

*The George Hyman Construction Co.: Nov. 23: P-78-18:* Employees are required to follow completely the instructions given by one-call notification systems. *P-78-19:* Employees are instructed to ascertain by all possible means the locations of underground facilities before excavating at a construction site. After contacting local or out-of-town utility offices in order to locate all utilities, drawings are made and sent to all interested utility companies for verification.

*Mountain Bell (New Mexico):* Nov. 23: P-80-48 and -49: Company practices and procedures direct excavation contractors and company crews not to begin excavation operations until underground facilities have been marked properly, and when facilities are damaged as a result of excavation activities, to immediately notify the owner so that inspection, repair, or other emergency actions can be initiated. *P-80-49:* Company practices and procedures require that when gas facilities are disturbed or damaged, necessary precautions such as evacuation of adjacent buildings be taken to ensure the safety of the public.

*Cities Service Pipe Line Company: Nov. 23: P-80-3:* Is studying the extent of the problem concerning determining the depth of pipe at all crossing where ditch-cleaning and road-grading may result in damage to the line. *P-80-4:* Actively participated in the development, publication, and distribution of informational materials such as an American Petroleum Institute pamphlet and an industry newspaper advertisement designed to educate the general public and construction personnel on how to recognize pipeline rights-of-way and the necessary precautions to be observed when excavating near pipelines. Has an ongoing educational program for city/county engineers, drainage district personnel, and others, on the safety measures that should be observed when excavating near pipelines. Supports the concept of, and is a member of, several one-call systems.

*Atlanta Gas Light Company: Nov. 24: P-78-21:* Informed employees of the importance of determining, upon notification, the exact location and extent of each proposed excavation project to assure that the location of all gas facilities that may be affected will be identified and marked. *P-78-22:* Has operating policy to review emergency cut-off districts, keeping in mind the need to redistrict congested business areas if necessary.

*Dow Chemical U.S.A.: Dec. 1: P-76-39:* A network Supervisory Control and Data Acquisition System provides operational control and data to a continuously manned dispatch center in Houston. *P-76-40:* Created the postion of a Dow Pipeline Public Education Specialist to make formal presentations on pipeline safety and emergency procedures to area city and county officials, fire, police and sheriff departments, and other interested parties. Each agency is revisited annually to make sure that they know what pipelines and facilities are in their area, that they have a current copy of pipeline location map books for their area, and that they are updated with Dow's pipeline safety program. Also, Dow periodically meets with local contractor associations and presents a slide/tape program aimed at the prevention of pipeline damage due to excavation activity. *P-76-41:* Believes that Dow has been a leader in employing the total system concept in the design, construction, inspection, testing, and operation of pipelines.

*American Petroleum Institute: Dec. 15: P-78-12 and -13:* The American Gas Association actively has studied stress corrosion cracking and methods to prevent and control it over the past 10 years and currently expends some $200,000 to $300,000 of annual research funds on this subject. *P-79-8:* The committee has studied the effects of dents and gouges on line pipe. *P-78-14:* Much research has been conducted on liquefied petroleum gas detectors. *P-79-7:* Advised its member companies of the importance of careful, thorough inspection during LPG pipeline construction to minimize the incidence of dents and gouges, and of the need to use proper engineering techniques when it is necessary to relocate or lower a section of pipeline. *P-80-70:* Urged member companies to evaluate their leak detection systems and procedures and to provide for periodic examination of the area around fillet-welded sleeves for signs of leakage.

*American Society of Mechanical Engineers, Gas Piping Standards Committee: Dec. 16: P-82-47:* Will consider at its next meeting the revision of the ASME Gas Guide, provided for compliance with 49 CFR 192.751, to advise against cutting gas mains under pressure unless specific conditions can be identifed wherein such a practice can be performed safely.

*American Society of Mechanical Engineers: Dec. 20: P-73-25:* The recommendation was referred by the American National Standards Institute to ASME for response since ASME is publisher of the B31.4 Code. Several sections of the code were revised in 1974 to emphasize damage avoidance and to refer users to

American Pertoleum Institute Recommended Practice 1109 concerning marking liquid petroleum pipeline facilities.

*American Gas Association: Dec. 22: P-79-1:* Advised member companies of the circumstances of the natural gas accident on Padre Island, Texas, on January 27, 1978, and urged them to review their remote installation alarm systems and to correct any deficiencies found.

**Railroad**—*Federal Railroad Administration: Nov. 22: R-73-5; R-74-2, -3, and -4; R-75-2; R-76-20; R-77-4, -6, -7, -8, -29, and -33; R-78-43; R-79-17, -19, and -25; R-80-32; and R-81-35:* Is continuing research and development related to track safety, especially in rail restraint, track panel restraint, rail integrity, and track/vehicle interaction. *Dec. 15: R-82-86:* Conducted a safety review of bolster and center plate interference inspection practices on the Seaboard Coast Line Railroad and the Duluth, Winnipeg and Pacific Railway and found inspection practices to be inadequate on both railroads. Both railroads have repaired the cars and are training employees to improve inspection techniques. *R-82-87:* Informed FRA inspectors of the circumstances of the derailment of the Seaboard Coast Line train on November 13, 1981, near Montgomery, Alabama, and instructed them to inform railroad representatives of the seriousness of inadequate bolster and center plate inspections. *Dec. 30: R-82-101 and -102:* Regulations that would require the provision of additional warnings, such as complementary flag protection, blowing the locomotive whistle periodically, and boardcasting a one-time unaddressed and undirected radio message, when a train has passed a restricted or stop signal indication would not result in a significant increase in safe train operations.

*Illinois Central Gulf Railroad: Nov. 15: R-81-32 and -33:* Forwarded copies of a curve superelevation table and the ICG's Special Instruction T-10-82 regarding curve worn rail.

*The Atchison, Topeka and Santa Fe Railway Company: Nov. 15: R-82-4,* which recommended an evaluation of the quality of existing inspection practices and maintenance procedures for track turnouts, track crossings, and special trackwork, and revise those practices and procedures where necessary to prevent derailments: Changed the alignment at a turnout in one location where a train derailed, and eliminated a turnout from a curve at another location. Cited vanadalism as the cause of one accident, and ice crystals in the mechanical switchman as the probable cause of another accident. Instituted a more intensive maintenance program to assure proper operation of mechanical switchman devices.

*Federal Emergency Management Agency: Nov. 30: R-82-85:* Regional directors have been directed to alert appropriate State and local officials to the possibility of handling undocumented hazardous materials at the scene of transportation accidents, and have been informed of a training course offered by the Department of Transportation entitled "Hazardous Materials Compliance and Inspection."

*NJ Transit: Dec. 3: R-82-107:* Following an inventory of all hand-operated facing point switches on its rail system, will develop a per unit and total project cost of installing electric locks on the switches to be used in reviewing the recommendation.

*Washington Metropolitan Area Transit Authority: Dec. 15: R-82-8:* Does not consider necessary this recommendation, which would require the establishment of an absolute block when operating a train in other than fully automatic mode, because current procedures maintain absolute block conditions in Mode 3 and retain use of Automatic Train Protection if Mode 2 is used. *R-82-9:* Changed current operating procedures to indicate that, when a train must be operated through a defective interlocking in the manual mode, the Operations Control Center (OCC) will require an absolute block through interlockings in both directions, one train at a time, until desired routes are verified correct. *R-82-10:* Operating rules did require train operators to report to the OCC whenever they were unable to operate in the fully automatic mode. Modified procedures to exclude notifying the OCC of train adjustments within stations. *R-82-11:* Modified operating rules to prohibit a manually operated train from entering a block containing malfunctioning interlocking without informing the operator of his destination and requiring an acknowledgement. *R-82-12:* Modified operating procedures to specify, in detail, the actions required by the OCC and train operators before moving against established traffic. *R-82-13:* Ring-down circuits have been installed where required and are verified daily for proper operation. *R-82-14:* Will expand radio communicating capability for the OCC by modifying radio control panels to accommodate additional positions and by training OCC controllers in the proper use of the radio. *R-82-15, -55, and -57:* The Rail Transportation Branch has provided refresher training to all supervisors, a superintendent of Rail Transportation Training has been hired, and a system analysis is being conducted under contract to identify potential training deficiencies. *R-82-16:* Implementation of mandatory periodic instruction and examination on operating rules and procedures, including emergency train evacuation procedures, for all rail supervisors and train operators will await the institution of a comprehensive training program to be developed upon completion of the systems analysis. Is evaluating possible evacuation options to determine the most appropriate means and methods of responding to emergency conditions. *R-82-17:* Procedures are established to remove third-rail power from the affected area before passengers are permitted on the track bed. A qualified power operator determines which segments are to be deenergized consistent with evacuation procedures. *R-82-18:* Is studying the need for a program to educate passengers on the procedures to be followed when it is necessary to evacuate a disabled train. *R-82-56:* Requested a Rail Training Branch in the FY84 budget. *R-82-58:* The overspeed enforcement circuitry is already designed to enforce all 10 Automatic Train Protection speed commands including zero miles per hour. Only after a train has come to a complete stop and its operator has received permission from the OCC can the operator operate the train up to 15 mph (enforced) in the Mode 2 (manual operation). By enforcing the speed of the train to 15 mph or less, it is felt that the operator is attentive and can stop the train short of any dangerous conditions. *R-82-59:* To change the identification numbers of interlockings and interlocking signals to eliminate possible misunderstandings which could result in a train improperly passing a restricting signal would require extensive revisions to as-built drawings and ATC manuals for each train control room, the renumbering of several hundred switch machines and signals, software modifications, and staff and technician retraining. *R-82-60:* Procedures have been established to ensure that OCC and rail transportation personnel refer to all signals by their complete and proper designation. *R-82-61:* Both OCC and transportation personnel thoroughly understood Standard Operating Procedure No. 15 for the establishment of an absolute block when there is a failure in the Automatic Train Control system. WMATA will continue to emphasize compliance with all directives and will verify knowledge requirements during certification examinations. *R-82-62:* The Metrorail operating rules will be revised to include a definition of restricted speed. Special Order No. 82-003 requires the OCC supervisor to assure that certain steps are completed before a train may proceed through an interlocking with inoperative track circuits. *R-82-63:* Discontinued the practice of using oral instructions. *R-82-64:* Is testing a design of the automated alert system which segregates alarms more through the use of color and screen location and which eliminates most train ID alarms. *R-82-65:* Developed additional procedures to require Maintenance Control to reconcile job control numbers and Type 1 alarms daily. *R-82-66:* To include the recommended check of switch machine functions in daily inspections would require additional technicians. *R-82-67:* Will request funds to purchase selfcontained radios that will function if auxiliary and emergency car sources are lost. *R-82-68:* American Public Transit Association reviewed Metrorail safety program and its rules and procedures in September 1982. *R-82-69:* Special Order No. 82-05 requires that, when an emergency occurs which automatically opens third rail breakers, the OCC supervisor must immediately command open all breakers in that area including the ones which were automatically opened. Also, the display of traction power breakers was redesigned at the advent of the color display system. *R-82-70:* Is evaluating the installation of marked emergency escape windows on cars. *R-82-71:* Is evaluating the cost/benefit of equipping cars with selfcontained, battery-operated emergency lights. *R-82-72:* Is evaluating the posting of emergency information inside Metrorail cars regarding operation of the manual emergency door handle. *R-82-73:* Is evaluating the equipping of cars with derailment detector devices that will apply the brakes in emergency when a car wheel

leaves the rail. *R-82-74:* Existing carborne monitors are unreliable and not maintainable, so substitute recording devices are being studied. *R-82-75:* Providing a portable radio, compatible with the Metrorail communication system, at each station kiosk for dedicated use by fire/rescue personnel would superimpose additional radio users on WMATA frequencies during a crisis and would cost about $150,000. Is presently installing the fire/police/emergency medical service radio system scheduled to become operational by October 1983. *R-82-76:* The underground communications system is scheduled for completion in October 1983. *R-82-77:* Conducted a disaster crash simulation in conjunction with area fire departments and hospitals and will continue to conduct similar drills.

*National Fire Protection Association: Nov. 15: I-82-6:* Believes that the distances specified to separate a hazardous materials storage area from a property line that can be built upon (including railroad rights-of-way) in NFPA Code No. 30 are adequate.

*ARCO Petroleum Products Company: Dec. 30: H-82-5:* Will present to all its operating facilities the Southern Railway's program "Calamity at the Crossing."

*Southeastern Pennsylvania Transportation Authority: Jan. 5: R-82-110:* All active automatic crossing protection on the Fox Chase Rapid Transit Line has been modified so that once a train initially shunts the circuit, a timing feature holds the shunt for 3 seconds. *R-82-111:* Modifying the inward opening passenger doors in the existing diesel rail cars to facilitate passenger evacuation is neither economically feasible nor does it facilitate egress during an emergency. *R-82-112:* Is getting involved with the Operation Lifesaver program despite the lack of official sanction from the State and is reemphasizing grade crossing hazards at safety briefings.

*Association of American Railroads: Dec. 22: R-81-96:* State of Virginia will work with a Federal Highway Administration/Railroad and Truck Industries task force on a pilot project regarding the acquisition of certain data and the implementation of remedial procedures involving truck transportation of hazardous materials traversing grade crossings.

**Note.**—Single copies of recommendation letters (identified by recommendation number) and response letters are free on written request to: Public Inquiries Section, National Transportation Safety Board, Washington, D.C. 20594.

**H. Ray Smith, Jr.,**

*Federal Register Liaison Officer.*

February 7, 1982.

[FR Doc. 83-3690 Filed 2-9-83; 8:45 am]

BILLING CODE 4910-58-M

## POSTAL RATE COMMISSION

### Los Angeles (CA) Sectional Center Facility; Visit

February 4, 1983.

Notice is hereby given that Commissioner Crutcher will visit the Los Angeles (CA) Sectional Center Facility of the U.S. Postal Service on Wednesday, February 16, 1983, for the purpose of gaining general knowledge and understanding of mail operations. A report of the visit will be filed in the Commission's Docket Room.

**David F. Harris,**

*Secretary.*

[FR Doc. 83-3656 Filed 2-9-83; 8:45 am]

BILLING CODE 7715-01-M

## SECURITIES AND EXCHANGE COMMISSION

### Cincinnati Stock Exchange; Applications for Unlisted Trading Privileges and of Opportunity for Hearing

February 3, 1983.

The above named national securities exchange has filed applications with the Securities and Exchange Commission pursuant to Section 12(f)(1)(B) of the Securities Exchange Act of 1934 and Rule 12f-1 thereunder, for unlisted trading privileges in the following stocks:

Computervision Corporation—Common Stock, $.05 Par Value (File No. 7-6492)
Datapoint Corporation—Common Stock, $.25 Par Value (File No. 7-6493)
Getty Oil Company—Common Stock, No Par Value (File No. 7-6494)
The E. F. Hutton Group Inc.—Common Stock, $1 Par Value (File No. 7-6495)
Mesa Petroleum Co.—Common Stock, $1 Par Value (File No. 7-6496)
National Medical Care, Inc.—Common Stock, $.20 Par Value (File No. 7-6497)
Oak Industries, Inc.—Common Stock, $1 Par Value (File No. 7-6498)
Phibro-Salomon Inc.—Common Stock, $1 Par Value (File No. 7-6499)
US Air, Inc.—Common Stock, $1 Par Value (File No. 7-6500)
American Broadcasting Companies, Inc.—Common Stock, $1 Par Value (File No. 7-6501)
Coleco Industries, Inc.—Common Stock, $1 Par Value (File No. 7-6502)
M/A-Com, Inc.—Common Stock, $1 Par Value (File No. 7-6503)
Mattel, Inc.—Common Stock, $1 Par Value (File No. 7-6504)
McDermott International, Inc.—Common Stock, $1 Par Value (File No. 7-6505)
The Superior Oil Company—Common Stock, $.10 Par Value (File No. 7-6506)
Texas Gas Corp.—Common Stock, $5 Par Value (File No. 7-6507)
Amdahl Corporation—Common Stock, $.05 Par Value (File No. 7-6508)
International Banknote Co., Inc.—Common Stock, $1 Par Value (File No. 7-6509)
Ranger Oil Limited—Common Stock, No Par Value (File No. 7-6510)
Tubos de Acero de Mexico—Common Stock, 50 Pesos Par Value, ADR (File No. 7-6511)
Wang Laboratories, Inc.—Common Stock, Class B, $.50 Par Value (File No. 7-6512)

These securities are listed and registered on one or more other national securities exchange and are reported in the consolidated transaction reporting system.

Interested persons are invited to submit on or before February 25, 1983 written data, views and arguments concerning the above-referenced applications. Persons desiring to make written comments should file three copies thereof with the Secretary of the Securities and Exchange Commission, Washington, D.C. 20549. Following this opportunity for hearing, the Commission will approve the applications if it finds, based upon all the information available to it, that the extensions of unlisted trading privileges pursuant to such applications are consistent with the maintenance of fair and orderly markets and the protection of investors.

For the Commission, by the Division of Market Regulation, pursuant to delegated authority.

**George A. Fitzsimmons,**

*Secretary.*

[FR Doc. 83-3595 Filed 2-9-83; 8:45 am]

BILLING CODE 8010-01-M

**[Release No. 13008; (812-5387)]**

### DCS Capital Corp.; Filing of Application

February 3, 1983.

Notice is hereby given that DCS Capital Corporation ("Applicant"), 100 West Tenth Street, Wilmington, Delaware, registered under the Investment Company Act of 1940 ("Act") filed an application on December 6, 1982, an order exempting Applicant from all provisions of the Act. All interested persons are referred to the application on file with the Commission for a statement of the representations contained therein, which are summarized below.

Applicant states that its only securities presently outstanding are shares of its capital stock, all of which are owned, in equal shares, by The Dow Chemical Company ("Dow"), a Delaware corporation, Union Carbide Corporation ("Union Carbide"), a New York corporation, and Shell Canada Limited ("Shell Canada"), a Canadian corporation. Applicant further states that Dow, Union Carbide and Shell Canada (hereinafter referred to as "Participants") intend to form a U.S.

partnership ("Partnership"), the general partners ("Partners") of which will be direct or indirect wholly-owned subsidiaries of Dow, Union Carbide and Shell Canada. It is further stated that upon formation of the Partnership, Dow, Union Carbide and Shell Canada intend to transfer their shares of the capital stock of Applicant to the Partnership for the accounts of their respective subsidiary Partners.

Applicant represents that Dow is engaged in the manufacture and sale of chemicals, metals, plastic materials and products, and pharmaceutical, agricultural and consumer products and in the performance of certain specialized services; that Union Carbide is engaged in the manufacture and sale of chemicals and plastics, industrial gases and related products, metals and carbons, batteries/home and automotive products and certain specialty products; and that Shell Canada is an integrated oil company engaged in the exploration for and development of crude oil, natural gas, oil sands and coal properties and the production, refining, transportation and marketing of crude oil and natural gas liquids, natural gas, petroleum products, petrochemicals, sulphur and coal. It is also stated that Shell Canada is controlled by the Royal Dutch/Shell group of companies.

Applicant states further that the Partnership will make loans to The Alberta Gas Ethylene Company Ltd. ("AGEC") an Alberta corporation, which is a wholly-owned subsidiary of Nova ("Nova") also an Alberta Corporation, in connection with the construction of an ethylene plant and related facilities at Joffre, Alberta ("Project"), to be owned and operated by AGEC. It is represented that the Project is expected to produce 1.5 billion pounds per year of polymer grade ethylene using ethane as feedstock and will be operated in conjunction with a similar facility owned by AGEC at the same site. Approximately 76% of the ethylene to be produced at the Project it is stated, will be sold to Dow Chemical Canada Inc. ("Dow Canada") a wholly-owned subsidiary of Dow, Union Carbide Ethylene Oxide/Clycol Company ("Union Carbide EO/G"), a wholly-owned subsidiary of Union Carbide and Shell Canada (hereinafter, Dow Canada, Union Carbide EO/G and Shell Canada are collectively referred to as "Purchasers") pursuant to take-or-pay purchase contracts providing for the sale of ethylene over a 20-year period (hereinafter collectively referred to as the "Purchase Contracts"). Applicant states that the obligations of Dow Canada and Union Carbide EO/G under their respective Purchase Contracts have been guaranteed by Dow and Union Carbide, respectively. The remaining 24% of the ethylene, Applicant further states, will be sold to Nova pursuant to a similar contract (hereinafter referred to as the "Nova Contract"). Applicant represents that the current projected cost of the Project is approximately $800,000 (Canadian), including interest during construction, start-up costs, certain deferred costs during the first two years of operation, and allowance for contingencies.

Applicant further states that its sole purpose is to assist the Partnership in raising the funds needed to supply the Participants' share of the financing of the Project by issuing debt securities in series in various markets. It is further stated that proceeds of the issuance of such securities will be used by Applicant to purchases notes or other evidences of indebtedness issued by the Partnership ("Partnership Notes"), the principal of and premium, if any, and interest on which will be payable at such times as will coincide with the payment terms of the corresponding series of Applicant's debt securities. Applicant states that all expenses of Applicant will be reimbursed to it by the Partnership. The Partnership, it is stated, will use the proceeds from the sale of Applicant's debt securities to make loans to AGEC from time to time to pay construction costs of the Project and start-up and certain deferred costs in connection with the Project.

Applicant further states that each series of securities issued by Applicant will be secured by a related series of Partnership Notes. The Partnership Notes, it is stated, will in turn be secured by an assignment of the Partnership's rights under "cash deficiency agreements" ("CDA's") and related guarantees, and by the secured indebtedness of AGEC owing to the Partnership and representing the loans made to AGEC by the Partnership. Applicant states further that the Partnership will be the recipient of three CDA's from subsidiaries (hereinafter referred to as the "CDA Obligors") of the Participants. It is stated that if for any reason, whether before or after completion of construction of the Project, the Partnership has a cash deficiency on the date that any payment is due with respect to indebtedness of the Partnership (including the Partnership Notes issued to Applicant), each CDA Obligor will be severally and unconditionally obligated to advance in cash its share of such cash deficiency unless such cash deficiency occurs as a result of a default by a Purchaser under its Purchase Contract, in which case the affiliated CDA Obligor will be solely responsible for making up such deficiency. Applicant further states that the loans by the Partnership to AGEC will be evidenced by secured notes ("AGEC Notes") which will bear interest at a rate equal to the Partnership's cost of money; will provide for equal monthly principal repayments commencing with completion of the Project and ending in 2004; and will be secured by a mortgage on the Project and an assignment of the Purchase Contracts and the Nova Contract. It is anticipated that AGEC will issue other *pari passu* indebtedness for the difference between the funds loaned to it by the Partnership and the aggregate construction costs of the Project, including interest during construction, start-up costs and certain deferred costs. It is further stated that the Purchasers' payment obligations under the Purchase Contracts will be assigned as prior security to secure the AGEC Notes issued to the Partnership (and any notes issued by AGEC to refund the AGEC Notes), with a second security interest for the benefit of other lenders to AGEC. Similar payment obligations under the Nova Contract will be assigned, Applicant states, as prior security to secure such other lenders with a second security interest for the benefit of the Partnership (and any holders of such refunding notes). It is stated, in addition, that AGEC will receive certain credits from time to time with respect to its obligations to pay the principal of and interest on the AGEC Notes equal to a portion of the amounts owing by the Purchasers under the Purchase Contracts and the Purchasers' payment obligations under the Purchase Contracts will be reduced accordingly. Applicant represents that to the extent that advances made under the CDAs by the CDA Obligors exceed the amounts so credited to AGEC, such advances will, at the option of the CDA Obligors, be treated as non-interest-bearing subordinated loans or entitle the CDA Obligors to obtain a corresponding portion of the indebtedness of AGEC owing to the Partnership.

Applicant represents that the initial series of its debt securities will be short-term notes (with a maturity not to exceed 270 days) issued under a trust agreement between the Applicant and a corporate trustee in New York City ("Trustee"). It is further stated that these short-term notes will be issued in denominations of not less than $100,000, with the average denomination expected to be significantly larger; will not be advertised for sale to the general public and will be sold in the commercial paper

market only to institutional investors and other entities who normally purchase commercial paper in large denominations. It is also stated that these notes will contain no provisions for payment on demand or for automatic "roll over", and that it is expected that these notes will be accorded the highest commercial paper rating by two nationally recognized rating agencies.

Applicant states further that the Partnership, with the assistance of Applicant as an external funding source, also intends to issue intermediate and, preferably, long-term debt securities, as market conditions permit or dictate, through a variety of issues corresponding to issues of Applicant in the institutional private placement markets and in the public markets.

Applicant further states that as security for the initial series of its debt securities, a related Partnership Note will be pledged to the Trustee and such Note will be secured by the CDA's guarantees and AGEC notes as described above. Applicant represents that future similar pledges of Partnership Notes issued with respect to other debt securities of Applicant and having the benefit of the same collateral will be made on a *pari passu* basis without restriction.

Applicant states that it may be deemed to be an "investment company" as defined in the Act (i) by reason of its proposed acquisition and holding of the Partnership Notes, which will constitute substantially all its assets, and (ii) because securities (other than short-term notes) it intends to offer may be held by more than 100 persons.

Section 6(c) of the Act provides, in pertinent part, that upon application the Commission may conditionally or unconditionally exempt any person, security of transaction or any class or classes of persons, securities or transactions from any provision or provisions of the Act or of any rule or regulation thereunder, if and to the extent that such exemption is necessary or appropriate in the public interest and consistent with the protection of investors and purposes fairly intended by the policy and provisions of the Act.

Applicant asserts that an order pursuant to Section 6(c) of the Act exempting it from all the provisions of the Act is appropriate in the public interest and consistent with the protection of investors and the purposes fairly intended by the policy and provisions of the Act. In support of this assertion, Applicant states that the sole purpose and only business of Applicant is to serve as a vehicle to facilitate debt financing for the Partnership on favorable terms. It is further stated that the only significant assets of Applicant will be Partnership Notes; that such Partnership Notes will be pledged as security for the benefit of the holders of the corresponding debt securities of Applicant or their representative; and that Applicant will not sell or trade in the Partnership Notes after they have been pledged as security for the benefit of the holders of Applicant's debt securities. It is further stated that all payments on Partnership Notes will be applied to the payment of principal, premium, if any, and interest on Applicant's corresponding debt securities, and that Applicant will not itself make any investment decisions on behalf of the holders of its debt securities.

Applicant states, in addition, that it will not hold shares of capital stock of any other corporation. The Partnership, it is stated, will be the sole owner of all the shares of Applicant's capital stock. Since Applicant's securities will be secured by the pledge of the related Partnership Notes, which will in turn have the benefit of the Partnership's rights under the CDA's, the related several guarantees thereof of the Participants and the AGEC Notes, purchase of Applicant's debt securities will be substantially the equivalent, Applicant asserts, of a purchase of direct obligations of the CDA Obligors, severally guaranteed by Dow, Union Carbide and Shell Canada as to the respective subsidiaries of each.

Applicant agrees to the following conditions being imposed on any order granting the requested exemption:

(1) Applicant will file with the Commission within 120 days after the close of its first fiscal year (a) information with respect to persons in a control relationship with it (except with respect to persons under common control with it), persons and number of persons owning equity securities of Applicant and directors, officers, employees and legal counsel required by Items 11 and 12 of Form N-2 under the Act, and (b) a statement of financial position as of the close of such fiscal year, including a statement of income, paid-in surplus and retained earnings, and a schedule of investments as of the close of such fiscal year, and will notify the Commission promptly of any material change in such information or statement;

(2) Applicant will file with the Commission within 120 days of the close of its first fiscal year a schedule of the number of holders of its short term or other bearer securities and of its securities in registered form as of the close of such fiscal year and the number of transfers of such registered securities during such fiscal year, and will notify the Commission promptly of any material change in such schedule; and

(3) Applicant will not sell any equity securities other than to the Partnership or sell any debt securities other than debt securities (a) which are to be held by the Partnership, the Partners, the CDA Obligors, Dow, Union Carbide or Shell Canada, or (b) which (i) are secured by a pledge of corresponding debt securities or other obligations of the Partnership which in turn are secured by an assignment of the CDA's, the guarantees hereinabove referred to and the AGEC Notes and (ii) are (A) offered and sold in transactions not involving any public offering to institutions, located in the United States and elsewhere, which are not "underwriters" of the securities within the meaning of the Securities Act of 1933, (B) sold in offerings outside the United States pursuant to agreements and procedures reasonably designed to prevent such debt securities from coming into the hands of a United States national or resident, or (C) notes which arise out of current transactions or the proceeds of which have been or are to be used for current transactions and which have a maturity at the time of issuance of not exceeding nine months, exclusive of days of grace, unless Applicant shall have first give written notice to the Commission describing the proposed issuance of such additional debt securities (including notice of a proposed filing of a registration statement under the Securities Act of 1933, as amended, pursuant to Commission Rule 415) not less than 60 days prior to the date of such proposed issuance, subject, however, to the right of the Commission, upon request of Applicant, to decrease such number of days. Applicant further agrees that if the Commission shall, after receipt of said written notice, determine that a substantial question exists as to whether or not the exemption granted by the order hereby requested should continue and the Commission shall, within 30 days after receipt by the Commission of such written notice from Applicant, mail or otherwise give notice to that effect to Applicant, Applicant will not issue such additional debt securities unless, after receipt by Applicant of such notice from the Commission and not less than 30 days prior to the issuance of such additional debt securities, Applicant shall mail or otherwise given written notice to the Commission stating its intention to issue such additional debt securities, and upon the giving of such notice by Applicant the order hereby requested

shall be deemed to have terminated as of the date Applicant shall have mailed or otherwise given such notice to the Commission.

Notice is further given than any interested person wishing to request a hearing on the application may, not later than February 28, 1983, at 5:30 p.m. do so by submitting a written request setting forth the nature of his/her interest, the reasons for his/her request, and the specific issues, if any, of fact or law that are disputed, to the Secretary, Securities and Exchange Commission, Washington, D.C. 20549. A copy of the request should be served personally or by mail upon Applicant at the address stated above. Proof of service (by affidavit or, in the case of an attorney-at-law, by certificate) shall be filed with the request. Persons who request a hearing will receive any notices and orders issued in this matter. After said date an order disposing of the application will be issued unless the Commission orders a hearing upon request or upon its own motion.

For the Commission, by the Division of Investment Management, pursuant to delegated authority.

**George A. Fitzsimmons,**

*Secretary.*

[FR Doc. 83-3589 Filed 2-9-83; 8:45 am]

BILLING CODE 8010-01-M

---

**[Release No. 13009 (812-5236)]**

## Wellington Fund, Inc. et al.; Filing of Application

In the matter of Wellington Fund, Inc., Windsor Fund, Inc., Ivest Fund, Inc., Gemini Fund, Inc., Explorer Fund, Inc., Wellesley Income Fund, Inc., W.L. Morgan Growth Fund, Inc., Vanguard Fixed Income Securities Fund, Inc., Qualified Dividend Portfolio I, Inc., Dividend Portfolio II, Inc., Trustees' Commingled Equity Fund, Inc., Vanguard Money Market Trust, Vanguard Municipal Bond Fund, Inc., Vanguard Index Trust, P.O. Box 1100 1250 Drummers Lane, Valley Forge, Pennsylvania 19482.

Notice is Hereby Given that Wellington Fund, Inc., Windsor Fund, Inc., Ivest Fund, Inc., Gemini Fund, Inc., Explorer Fund, Inc., Wellesley Income Fund, Inc., W.L. Morgan Growth Fund, Inc., Vanguard Fixed Income Securities Fund, Inc., Qualified Dividend Portfolio I, Inc., Qualified Dividend Portfolio II, Inc., Trustees' Commingled Equity Fund, Inc., Vanguard Money Market Trust, Vanguard Municipal Bond Fund, Inc. and Vanguard Index Trust (hereinafter referred to as the "Vanguard Group of Funds", or "Applicants") registered under the Investment Company Act of 1940 ("Act") as open-end, diversified, management companies, filed an application on July 6, 1982, requesting an order of the Commission pursuant to Section 6(c) of the Act exempting Applicants and any other investment company which may in the future become a member of the Vanguard Group of Funds, from the provisions of Rule 20a-2(a)(19) under the Act, which in general requires that a registered investment company include a certified balance sheet of its investment adviser in its proxy statement. All interested persons are referred to the application on file with the Commission for a statement of the representations contained therein, which are summarized below.

Applicants states that as members of the Vanguard Group of Funds, they receive corporate management, administrative and distribution services on an "internalized", at-cost basis from their jointly-owned subsidiary, The Vanguard Group, Inc. ("Vanguard"). It is further stated that Wellington Management Company/Thorndike, Doran, Paine & Lewis ("WMC"), a Massachusetts partnership, serves as investment adviser to Wellington Fund, Inc., Windsor Fund, Inc., Gemini Fund, Inc., Explorer Fund, Inc., Wellesley Income Fund, Inc., W.L. Morgan Growth Fund, Inc., Vanguard Fixed Income Securities Fund, Inc., Qualified Dividend Portfolio I, Qualified Dividend Portfolio II, Inc., and the Domestic Portfolio of Ivest Fund, Inc. Applicants state, in addition, that Batterymarch Financial Management ("Batterymarch"), a sole proprietorship, serves as investment adviser to Trustees' Commingled Equity Fund, Inc., and that Schroder Capital Management, Inc. ("Schroder"), a New York corporation, serves as investment adviser to the International Portfolio of Ivest Fund, Inc. (WMC, Batterymarch and Schroder may be hereinafter referred to collectively as "Advisers"). Vanguard Money Market Trust, Vanguard Municipal Bond Fund, Inc. and Vanguard Index Trust, it is represented, have no investment adviser but receive investment advisory services on an at-cost basis from an internalized investment staff employed by Vanguard. Applicant states further that Vanguard Money Market Trust, Vanguard Municipal Bond Fund, Inc. and Vanguard Index Trust have joined in the application summarized herein because, although no such action is presently contemplated, these Applicants may, in the future, enter into a management agreement with an external investment adviser, thereby causing the provisions of Rule 20a-2(a)(19) to become applicable to proxy solicitations relative to the latter three funds.

Rule 20a-2(a)(19) under the Act provides that if action is to be taken by shareholders with respect to the election of directors of a registered investment company, and the solicitation of their proxies in connection with such election is made by or on behalf of the management of the investment company, or by or on behalf of an investment adviser, the proxy statement furnished to the shareholders must include a balance sheet of the investment adviser (unless the adviser is a bank), and such balance sheet must be certified by an independent public accountant or a certified public accountant. Rule 20a-2(a)(19) further provides, as here pertinent, that the Commission may, upon a showing of good cause, permit the omission of the adviser's balance sheet if the adviser is primarily engaged in a business or business other than the underwriting or distribution of investment company securities or the performance of advisory services for registered investment companies.

Section 6(c) of the Act provides, in pertinent part, that the Commission, by order, upon application, may conditionally or unconditionally exempt any person or transaction from any provisions of the Act, if and to the extent that such exemption is necessary or appropriate in the public interest and consistent with the protection of investors and the purposes fairly intended by the policy and provisions of the Act.

In support of the exemptions requested, Applicants assert that inclusion of the Advisers' balance sheets in Applicants' proxy statements is unnecessary in view of the internalization and centralization of administration and distribution services for the Vanguard Group of Funds through Vanguard. Under this arrangement, it is stated, Applicants' affairs are not controlled by their investment advisers in the manner in which, Applicant believes, an investment manager typically serves the fund to which it is under contract. Under the conventional externalized management structure, it is stated, the conduct of the investment company's business affairs is heavily dependent upon the adviser's financial stability, such that the financial failure of the investment manager would make it extremely difficult, if not impossible, for the investment company to conduct its affairs until another investment manager had been appointed to take over the day-to-day operations of the investment

company. In contrast, Applicants state, by reason of the functions performed by Vanguard, Applicants are not dependent upon the Advisers for any of their ongoing corporate management, administrative, or marketing requirements. Therefore, it is stated, if an Adviser were to fail, a fund being managed by such Adviser could continue its operations without interruption, and could immediately select another investment manager to provide advisory services to the fund.

As an additional basis for granting the application, Applicants state that the board of directors (trustees) of each Applicant is comprised of the same nine individuals (including eight independent directors and the chairman of the board of directors (trustees) and president of each Applicant). It is asserted that because these persons have no affiliations with any of the Advisers, such persons are in a position to evaluate the Advisers at arms-length. Moreover, Applicants maintain, the directors (trustees) of Applicants are in a position to make an independent review, and do in fact review, not only the Advisers' balance sheets, but other equally relevant information, generally including, the Advisers' profit and loss statements, the quality of the Advisers' personnel, the investment performance of Applicants, and the level of advisory fees being paid in comparison with alternative sources of investment management.

Applicants state further that each of the Advisers is "primarily engaged", within the meaning of Rule 10a-2(a)(19), in a business other than the businesses of underwriting of distributing investment company securities, or the performance of advisory services for registered investment companies. Neither WMC, Batterymarch, nor Schroder, Applicant states, derives any revenue from underwriting or distributing the securities of investment companies. It is further stated that each Adviser derives a substantial portion of its revenues from non-investment company clients, as set out in the following table:

| Adviser | Investment company assets [1] | Investment company revenues [2] |
|---|---|---|
| WMC | 35.0 | 39.0 |
| Batterymarch | 1.5 | 1.5 |
| Schroder | 13.7 | 20.0 |

[1] As a percentage of total assets under management.
[2] As a percentage of total revenues for year ended Dec. 31, 1981.

Applicants contend, in addition, that inclusion of the balance sheets of the Advisers in Applicants' proxy statements is confusing to shareholders. It is stated that during an annual meeting, shareholders of an Applicant will frequently direct questions pertaining to the balance sheet of an Adviser to management of an Applicant, in the mistaken belief that the balance sheet presented is that of an Applicant rather than that of its Adviser. Applicants also assert that, generally speaking, an investment adviser's balance sheet is of limited value to fund shareholders, and of limited relevance to the conduct of an annual meeting, especially in those years when the shareholders are not being called upon to approve or continue an investment advisory agreement.

In further support of this exemptive request Applicants represent that significant administrative burdens and expenses are imposed upon Applicants by the requirement that the Advisers' balance sheets be included in Applicants proxy statements, since the expense of printing and mailing these financial statements can easily double the cost of printing and mailing proxy statements. It is further stated that there are approximately 315,000 shareholders of those Applicants which employ an external investment adviser, and that it is estimated that during 1982 those Applicants would have reduced their printing and mailing expenses if the Advisers' balance sheets had not been included in Applicants' proxy statements. Applicant asserts, therefore, that, given the nature of Applicants' operations, there is no corresponding benefit to Applicants' shareholders that would justify or offset the additional costs associated with inclusion of the Advisers' balance sheets in Applicants' proxy statements.

Lastly, Applicants' assert that including balance sheets of the Advisers in Applicants' proxy statements also imposes significant administrative burdens and expenses upon the Advisers. It is stated that in most instances, a revised set of updated notes relating solely to the balance sheet of the Adviser must be prepared and certified by the Advisers' accountants in order to be included in the proxy statement.

Notice is further given that any interested person wishing to request a hearing on the application may, not later than February 28, 1983, and 5:30 p.m. do so by submitting a written request setting forth the nature of his/her interest, the reasons for his/her request, and the specific issues, if any, of fact or law that are disputed, to the Secretary, Securities and Exchange Commission, Washington, D.C. 20549. A copy of the request should be served personally or by mail upon Applicant at the address stated above. Proof of service (by affidavit or, in the case of an attorney-at-law, by certificate) shall be filed with the request. Persons who request a hearing will receive any notices and orders issued in this matter. After said date an order disposing of the application will be issued unless the Commission orders a hearing upon request or upon its own motion.

For the Commission, by the Division of Investment Management, pursuant to delegated authority.

**George A. Fitzsimmons,**

*Secretary.*

[FR Doc. 83-3590 Filed 2-9-83; 8:45 am]

BILLING CODE 8010-01-M

---

**[Release No. 19482; File No. SR-MCC-82-18]**

## Midwest Clearing Corp. ("MCC"); Order Approving Proposed Rule Change

February 3, 1983.

On November 15, 1982, MCC filed with the Commission, pursuant to Section 19(b)(1) of the Securities Exchange Act of 1934, 15 U.S.C. 78s(b)(1), (the "Act") and Rule 19b-4 thereunder, a proposed rule change, which amends MCC Rule 14, section 2 to provide that a broker-dealer applicant for membership or participant must have a minimum of $50,000 in excess net capital over the requirement imposed by the broker-dealer's designated examining authority.[1] The proposal further requires that non-broker-dealer applicants or participants meet and maintain compliance with the financial stability standards applicable to the industry with which those applicants and participants are asociated. Notice of the proposed rule change, together with the terms of substance of the proposed rule change, was given by publication of Securities Exchange Act Release No. 19358 (December 21, 1982), 47 FR 58075 (December 29, 1982). MCC amended the proposal to specify that non-broker-dealer participants must continue to meet the financial stability standards applicable to the industry with which they are associated.[2] No letters of

[1] *See generally*, 17 CFR 240.15c3-1. *See also*, Securities Exchanges Act Release No. 18744 (May 17, 1982), 47 FR 22265 (May 21, 1982), approving SR-NSCC-82-5 submitted by National Securities Clearing Corporation ("NSCC"). That proposal included, among other things, a requirement that broker-dealer applicants to NSCC have $50,000 of excess net capital.

[2] Letter amendment to the staff dated December 13, 1982, from J. Craig Long, Associate Counsel and Assistant Secretary of MCC.

comment were received by the Commission.

In its filing, MCC states that the proposal is needed because of the proliferation of new investment products and investment strategies and the increased volatility of the securities markets. MCC believes that the proposal should promote increased financial strength of MCC's participants, thereby reducing the likelihood of participant default. Accordingly, MCC believes that the proposal would reduce MCC's and its participants' potential financial exposure. Although MCC acknowledges that the proposal's net capital requirement may cause some financial difficulties for some broker-dealer participants, MCC hopes to ease those difficulties by allowing broker-dealer participants up to six additional months ("six month period") after the effective date of the proposal to comply with the new requirement.

The Commission believes that the proposed rule change would enhance the financial soundness of MCC participants, thereby reducing the risk of participant default due to insufficiently liquid assets. Accordingly, the Commission believes that the proposal should reduce MCC's and its participants' potential financial exposure consistent with Section 17A(b)(3)(F) of the Act.

The Commission recognizes that some MCC participants may have difficulty in meeting, or may be unable to meet, the increased net capital requirement. The Commission, however, is of the view that those participants should be able to increase their excess net capital or arrange correspondent relations with other participants during the six month period. Accordingly, the Commission has concluded that the proposal would not hinder unduly participants' access to MCC's clearance and settlement services and that any burden on competition caused by the proposal is necessary and appropriate to further the development of a national system for the prompt and accurate clearance and settlement of securities transactions, in accordance with Sections 17A(a)(2) and 17A(b)(2)(I) of the Act.

Accordingly, it is therefore ordered, pursuant to Section 19(b) of the Act, that the proposed rule change (SR-MCC-82-18) be, and hereby is, approved.

For the Commission by the Division of Market Regulation, pursuant to delegated authority.

**George A. Fitzsimmons,**

*Secretary.*

[FR Doc. 83-3591 Filed 2-9-83; 8:45 am]

BILLING CODE 8010-01-M

**[Release No. 19481; File No. SR-MSTC-82-24]**

## Midwest Securities Trust Company ("MSTC"); Order Approving Proposed Rule Change

February 3, 1983.

On November 15, 1982, MSTC filed with the Commission, pursuant to Section 19(b)(1) of the Securities Exchange Act of 1934, 15 U.S.C. § 78s(b)(1), (the "Act") and Rule 19b-4 thereunder, a proposed rule change, which amends MSTC Rule 8, § 2 to provide that a broker-dealer applicant for membership or participant must have a minimum of $50,000 in excess net capital over the requirement imposed by the broker-dealer's designated examining authority.[1] The proposal further requires that non-broker-dealer applicants or participants meet and maintain compliance with the financial stability standards applicable to the industry with which those applicants and participants are associated. Notice of the proposed rule change, together with the terms of substance of the proposed rule change, was given by publication of Securities Exchange Act Release No. 19360 (December 21, 1982), 47 FR 58076 (December 29, 1982). MSTC amended the proposal to specify that non-broker-dealer participants must continue to meet the financial stability standards applicable to the industry with which they are associated.[2] No letters of comment were received by the Commission.

In its filing, MSTC states that the proposal is needed because of the proliferation of new investment products and investment strategies and the increased volatility of the securities markets. MSTC believes that the proposal should promote increased financial strength of MSTC's participants, thereby reducing the likelihood of participant default. Accordingly, MSTC believes that the proposal would reduce MSTC's and its participants' potential financial exposure. Although MSTC acknowledges that the proposal's net capital requirement may cause some financial difficulties for some broker-dealer participants, MSTC hopes to ease those difficulties by allowing broker-dealer participants up to six additional months ("six month period") after the effective date of the proposal to comply with the new requirement.

The Commission believes that the proposed rule change would enhance the financial soundness of MSTC participants, thereby reducing the risk of participant default due to insufficiently liquid assets. Accordingly, the Commission believes that the proposal should reduce MSTC's and its participants' potential financial exposure consistent with Section 17A(b)(3)(F) of the Act.

The Commission recognizes that some MSTC participants may have difficulty in meeting, or may be unable to meet, the increased net capital requirement. The Commission, however, is of the view that those participants should be able to increase their excess net capital or arrange correspondent relations with other participants during the six month period. Accordingly, the Commission has concluded that the proposal would not hinder unduly participants' access to MSTC's clearance and settlement services and that any burden on competition caused by the proposal is necessary and appropriate to further the development of a national system for the prompt and accurate clearance and settlement of securities transactions, in accordance with Sections 17A(a)(2) and 17A(b)(2)(I) of the Act.

Accordingly, it is therefore ordered, pursuant to Section 19(b) of the Act, that the proposed rule change (SR-MSTC-82-24) be, and hereby is, approved.

For the Commission by the Division of Market Regulation, pursuant to delegated authority.

**George A. Fitzsimmons,**

*Secretary.*

[FR Doc. 83-3590 Filed 2-9-83; 8:45 am]

BILLING CODE 8010-01-M

[1] *See generally*, 17 CFR § 240.15c3-1. *See also*, Securities Exchange Act Release No. 18744 (May 17, 1982), 47 FR 22265 (May 21, 1982), approving SR-NSCC-82-5 submitted by National Securities Clearing Corporation ("NSCC"). That proposal included, among other things, a requirement that broker-dealer applicants to NSCC have $50,000 of excess net capital.

[2] Leter amendment to the staff dated December 13, 1982, from J. Craig Long, Associate Counsel and Assistant Secretary of MSTC.

## Midwest Stock Exchange, Inc.; Application for Unlisted Trading Privileges and of Opportunity for Hearing

February 3, 1983.

The above named national securities exchange has filed an application with the Securities and Exchange Commission pursuant to Section 12(f)(1)(C) of the Securities and Exchange Act of 1934 (the "Act") and Rule 12f-1 thereunder, for unlisted trading privileges in the following stock:[1]

[1] The Midwest Stock Exchange applied for unlisted trading privileges on November 13, 1979. Since July 26, 1979, the security has been trading on the exchange pursuant to a temporary exemption from the registration requirements of Section 12 of the Act contained in Rule 12a-5. The exemption will continue until the Commission grants or denies the unlisted trading privileges application.

Bally's Park Place, Inc., Common Stock, $.10 Par Value

The security is currently traded over-the-counter and is reported in the consolidated transaction reporting system.

Interested persons are invited to submit on or before February 25, 1983 written data, views and arguments concerning the above-referenced application. Persons desiring to make written comments should file three copies thereof with the Secretary of the Securities and Exchange Commission, Washington, D.C. 20549. Following this opportunity for hearing, the Commission will approve the application if it finds, based upon all the information available to it, that the extension of unlisted trading privileges pursuant to such application is consistent with the maintenance of fair and orderly markets and the protection of investors.

For the Commission, by the Division of Market Regulation, pursuant to delegated authority.

**George A. Fitzsimmons,**

*Secretary.*

[FR Doc 83-3596 Filed 2-9-83; 8:45 am]

BILLING CODE 8010-01-M

---

**[Release No. 19486; File No. SR-OCC-82-19]**

## Self-Regulatory Organizations; Proposed Rule Change Submitted; Options Clearing Corp. ("OCC"); Order Approving Proposed Rule Change

February 4, 1983.

### Introduction

On October 4, 1982, OCC submitted a proposed rule change (SR-OCC-82-19) under Section 19(b)(2) of the Securities Exchange Act of 1934 (the "Act") which would allow OCC to: (i) Issue options on certain stock indices as specified by an Exchange ("index options"), (ii) clear and settle index option transactions, and (iii) process and settle index options exercises. The Commission published notice of the proposal in the **Federal Register** on October 12, 1982 and invited interested persons to comment.[1] No letters of comment were received. In addition, on December 15, 1982, OCC submitted a technical amendment to the proposed rule change.

Pursuant to Section 19(b)(1) of the Act, 15 U.S.C. 78s(b)(1), and Rule 19b-4 thereunder, the American Stock Exchange, Inc. ("Amex"), the Chicago Board Options Exchange ("CBOE"), and the New York Stock Exchange, Inc. ("NYSE") filed with the Commission proposed rule changes modifying their rules to accommodate the listing and trading of standardized options on stock indices. The Commission approved the Amex, CBOE and NYSE proposals related to index options on November 22, 1982.[2] Before trading can begin on index options, however, among other things OCC's proposed rules respecting issuance, clearance and settlement of index options must be approved.

### Description of the Proposed Rule Change

In proposing rules that would provide for the issuance, clearance and settlement of index options transactions, and for the processing and settlement of index option exercises, OCC has, as appropriate, paralleled its existing rules and procedures with respect to equity and debt options.[3] The instant proposal, however, is unique among existing options products because index option exercises will be settled in cash, rather than through the delivery of securities. Therefore, OCC has proposed exercise settlement procedures that are substantially similar to the procedures currently used for premium settlement of options purchases and sales transactions.

1. *Index Option Contracts*

The proposed rule change would empower OCC to issue uncertificated put and call options on several stock indices.[4] The underlying index option product will be a stock index computed and published by an Exchange.[5] The holder of an index option contract will have the right, upon exercise, to purchase from OCC (in the case of a call) or to sell to OCC (in case of a put) the "current index value." Thus, because excercises will be settled in cash, an assigned writer of an option receiving an excercise notice must pay OCC the diference between the exercise price of the option and the current index value at the close of trading on the day of exercise.[6]

2. *Index Option Clearing Members*

As a prerequisite to clearing transactions in index options, OCC will require clearing members to obtain special authorization. OCC believes that special membership standards are necessary because the processing of non-equity options differs in key respects from the system used for equity options. Accordingly, in addition to meeting the financial and other requirements associated with membership in OCC, index option clearing members must, in OCC's judgment, have the operational and financial capacity to successfully clear and process transactions in index options.

3. *Processing of Index Options*

OCC will process index option purchase and sale transactions in accordance with procedures that are identical to OCC's well-established system for processing equity option purchase and sale transactions. Similar procedures have recently been implemented with respect to Treasury and GNMA options and have been approved by the Commission for processing transactions in CD and foreign currency options.[7]

---

[1] Securities Exchange Act Release No. 19119 (October 14, 1982), 47 FR 46940 (October 12, 1982).

[2] Securities Exchange Act Release No. 19264, 47 FR 53981 (November 30, 1982).

[3] The term "debt options" includes options on Government National Mortgage Association Securities ("GNMA options"), Treasury bills, bonds and notes (collectively "Treasury options"), and certificates of deposit ("CD options"). On October 14, 1982, the Commission approved OCC's rules respecting GNMA and Treasury options. (*See* Securities Exchange Act Release No. 46934). On December 14, 1982, the Commission approved OCC's rules respecting CD options (*See* Securities Exchange Act Release No. 19333).

[4] In its rule filing, OCC did not specify the particular indices on which it plans to issue options. The Exchange rule filings, however, contemplate the trading of options based on market and sector indices. Specifically, the NYSE has proposed options on the NYSE Composite Index and the four NYSE sector indices (the "NYSE Energy Index," "NYSE Transportation Index" and the "NYSE Utility Index"). The CBOE has proposed options on a market index of its own composition, referred to as the "CBOE-100 Stock Index." The Amex will trade an option on the "Amex Market Value Index". In addition, the Amex has recently submitted an additional rule filing which it proposes to trade eleven industry sector indices. The proposed rule changes of the various exchanges provide more detail regarding the specific index options proposed for trading at this time. *See* File Nos. SR-Amex-82-8, SR-CBOE-82-11, SR-NYSE-82-2, and SR-Amex-82-22.

[5] A stock index is the sum of the price of one share of each stock in the index multiplied by a pre-established divisor. The divisor reflects the base value of the index, *i.e.*, the market value of the index's component stocks as of a specified date. In addition, some indices are weighted, *i.e.*, the price of the issuer share included is multiplied by the number of outstanding shares of that issuer. The indices are updated every minute to reflect current market values. The current value of the index times the index multiplier, an unvarying dollar amount for each index option, equals the "current index value." The current index value is calculated at the close of each trading day and published by the Exchange.

[6] For example, if, on October 21, 1982, when the NYSE Composite Index closed at 79.72, a holder exercised a call option with an exercise price of 75, the writer assigned the exercise would have been obligated to pay the holder $472 (((79.72×$100 (the index multiplier)=$7,972)−(75.00×$ 100 =$7,500)=$472).

[7] The Commission approved OCC's foreign currency rules on November 24, 1982. *See* Securities Exchange Act Release No. 19274.

The processing of index options transactions will entail receiving compared trade data from the various exchanges, issuing, and (in the case of closing transactions) cancelling the appropriate contracts and effecting the correspondent money settlement. OCC will make appropriate book entries to index option clearing members' accounts representing the long and short positions in each account. Cash premium settlement for index option transactions will be effected in the same manner that OCC effects premium settlement for equity options; OCC will draft or make payments to the clearing member's account in the net premium amount. as reflected on a daily report issued to all clearing members.

Under the proposed rule change, OCC will also process exercises and effect settlement of index options.[8] OCC's proposed system for processing index option exercises in general parallels the systems approved by the Commission for processing exercises in respect of debt and foreign currency options. Because index options are settled in cash, however, the index options exercise settlement systems are modeled after OCC's cash premium settlement systems. Notably, as is the case with premium settlement, settlement obligations will run between OCC and each clearing member.[9]

Generally, OCC will assign exercise notices submitted by exercising index options holders to clearing members with short positions in the exercised contracts. OCC will calculate the settlement price in respect of each contract [10] and then net the settlement prices of all index contracts due to settle the next day to arrive at a net money settlement obligation for each account of each clearing member.[11] Once the netting cycle is completed, OCC will distribute a netting report to each clearing member which will advise clearing members of their cash delivery and receive obligations which must be met on settlement date.[12] Under the proposed rule change, OCC will be authorized to pay clearing members and draft clearing members' bank accounts, as appropriate, in satisfaction of net settlement amounts due to OCC.

Because index options are settled in cash instead of by delivery of a financial instrument, OCC has not proposed closeout procedures to be used in the event an index options clearing member fails to meet its settlement obligations. Instead, because a failure to meet exercised index option settlement obligations is necessarily a failure to meet a daily money obligation to OCC, OCC's proposed rules provide for the application of its existing suspension rules [13] and the disposition of settlement obligations through the "liquidating settlement account." [14] Generally, under the proposal, OCC willdraw from or credit to the liquidating settlement account any net settlement amount in respect of outstanding exercised or assigned contracts in accordance with existing procedures. As stated, because settlement obligations in respect of index options exercises run between clearing members and OCC, OCC will effect settlement with the *contra* participants, notwithstanding the suspension of the defaulting participant.

4. *Margin*

As the issuer of index option contracts, OCC guarantees the performance of assigned option writers to exercising holders. To collateralize this guarantee in the event a clearing member defaults, OCC requires clearing members to deposit margin with OCC.[15] The margin requirement is adjusted daily for each account to reflect changes in both a clearing member's aggregate positions and relevant changes in the market value of those positions.

In general, OCC's margin rules approved by the Commission for debt and foreign currency options will be applicable to index options.[16] The margin required with respect to unassigned short positions in index options is 100% of the current asked price of the option plus a "minimum margin amount" that functions as a protective cushion. Because settlement of exercised index options will occur on the day after exercise, OCC generally will not require margin to be deposited in respect of exercised and assigned positions.

Under the proposed rule change, however, OCC will have authority to require margin in respect of exercised and assigned contracts whenever settlement is postponed or delayed. In those instances, OCC will require margin, with respect to a net assigned short position, equal to 100% of the difference between the current index value and the exercise price plus a "minimum margin amount." Also, when settlement is postponed or delayed, OCC would require margin on exercised long positions that are out-of-the-money.[17] The margin required on such out-of-the-money long positions will equal 100% of the difference between the current index value and the exercise price plus a "specified dollar amount" determined by OCC.[18]

---

[8] In contrast to equity procedures, OCC has not provided for "automatic exercise" of expiring index options that are in-the-money by a specified amount. (Automatic exercise rules are intended to reduce the likelihood that a clearing member could inadvertently fail to exercise a profitable option prior to its expiration.) At this time, OCC has chosen not to develop a system to administer an automatic exercise program. OCC will, however, generate for its members a non-equity options advisory report on in-the-money options immediately prior to expiration date.

[9] As a contractual matter with respect to existing options products, OCC guarantees only the writer's performance (*i.e.*, OCC does not guarantee the performance of exercising holders to assigned writers.) Under the proposed rule change, however, because all rights and obligations incident to exercise settlement run between each clearing member and OCC rather than between exercising and assigned clearing members, OCC will, in addition to its customary guarantee, guarantee the performance of exercising holders of index options to assigned writers of such options.

[10] As stated *supra*, the exercise price is the difference between the aggregate current index value and the aggregate exercise price. For example, in the case of an exercised put index option contract if the aggregate current index value is less than the aggregate exercise price, the exercise settlement amount will be paid by the assigned clearing member to OCC and by OCC to the exercising clearing member.

[11] For example, if a clearing member, as an assigned writer of a NYSE Composite Index option, owes OCC $472 but is due $300 as a result of exercising a NYSE Composite Index option, both due to settle on the same day, OCC would draft that clearing member's account in the amount of $172 (its net payment obligation).

[12] Under the proposed rule change, the exercise settlement date will be the business day following the day on which an exercise notice is properly tendered to OCC.

[13] Pursuant to existing rules, OCC may suspend a clearing member that is unable to meet its obligation to OCC. In the past it has been OCC's practice to suspend any clearing member that failed to timely meet its money settlement obligations notwithstanding OCC's discretion under its suspension rules to maintain such a member.

[14] The "liquidating settlement account" is a special account created upon the suspension of an OCC participant. That account consists of the suspended clearing member's assets on deposit with OCC, including margin deposits, securities held in bulk and that member's clearing fund contributions. OCC closes out a suspended member's outstanding obligations to OCC through transactions in this account.

[15] Margin is merely one protective device designed to protect OCC against losses attributable to the default of a clearing member. In addition, OCC has recourse to both participants' funds, the Stock Clearing Fund and the Non-Equity Securities Clearing Fund. Index option clearing members will be required to make contributions, in accordance with a specified formula, to the Non-Equity Securities Clearing Fund. OCC can liquidate a participant's contribution to these funds when a suspended participant's margin deposit is insufficient to cover its obligations to OCC.

[16] OCC has not identified margin amounts for index options in respect of the CBOE–100 Stock Index because the composition of that index is as yet undetermined.

[17] A contract is out-of-the-money if the exercise price exceeds (in the case of calls) or is less than (in the case of puts) the market price of the underlying security.

[18] The specified dollar amount for out-of-the-money long exercised contracts on the NYSE Industrial Index, on the NYSE Transportation, on the NYSE Financial Index and on the NYSE Composite Index will be $200, on the NYSE Utility

The proposed rule provides that the minimum margin amount would be set contract-by-contract, at a point between $25 and $100 (or whatever higher limit OCC believes is necessary) [19] depending upon the degree to which a contract is out-of-the-money. Because contracts that are out-of-the-money are less likely to be exercised and, therefore, pose a smaller risk to OCC than in-the-money contracts [20] OCC would impose a smaller minimum margin cushion on out-of-the-money options.[21]

Although clearing members may cover a short position in equity options by depositing the underlying securities or treasury bills in lieu of margin, such deposits will not be accepted in respect to index option short positions.[22] OCC has stated, however, that it will consider allowing the deposit of Treasury bills in respect of short put positions in the future if demand warrants.

5. *Adjustment to Index Option Contracts.*

In recognition that from time to time events may occur which may affect the level of the index underlying an index option contract, OCC's proposal provides for adjustments by OCC to the terms of index option contracts.[23] Because such changes ordinarily are made without significantly affecting the level of the index, the proposed rule change provides that generally no adjustments to the terms of index option contracts will be made due to changes in the composition of the group of securities comprising the underlying index or in the relative weight given to particular securities in the index group.[24] However, OCC will maintain the right to adjust, in its discretion, the terms of any outstanding index option contract if OCC believes that the level of the index is significantly disturbed by any change in the underlying index.[25] Adjustments may be made by altering the dollar amount used to determine the current value of the index (*i.e.*, the index multiplier). In addition, OCC may take any other action it deems proper to protect the interests of both holders and writers of affected index options contracts.

6. *Unavailability of Underlying Index Value*

OCC's proposed rules set forth procedures for OCC to follow in the event that the index value is unreported or unavailable. Under the proposed rule change, if the current index value is unreported or otherwise unavailable, OCC may take two courses of action: (i) OCC may suspend settlement obligations until the current index value becomes available; or (ii) OCC may fix the settlement amount based on the best available information.

The proposal also sets forth rules for OCC to follow if the current index value, as initially reported by the designated reporting authority, is determined to be inaccurate. The proposed rule provides that, unless OCC directs otherwise, the initially reported current index value will be conclusively presumed to be accurate and final for the purposes of calculating exercise settlement amounts even if such value is subsequently revised by the reporting authority or is determined to be inaccurate. OCC, however, has proposed to adjust the index value in "extraordinary circumstances" when the reported index value is determined to be "clearly erroneous" and inconsistent with the values reported earlier in the same trading day.[26] Specifically, whenever OCC determines that the reported current index value is clearly erroneous and a corrected value is announced promptly by the reporting authority, OCC may, in its discretion, adjust the current index value. Under the proposed rule, however, OCC will not adjust any index value once settlement has taken place.

In its filing, OCC stated that its proposal to adjust a reported current index value only when that value is determined to be clearly erroneous and inconsistent with earlier reported values is designed to minimize potential disparities in treatment between persons who buy and sell stock index options at premiums based on incorrect index values and persons who exercise such options, or are assigned index exercises, based on incorrect values. OCC believes that, as a general matter, since premiums based on erroneous index values cannot be retroactively adjusted under existing rules of the various Exchanges subsequent to execution of the trade, exercise settlement amounts should not be adjusted either.[27] OCC stated that making such adjustments as a matter of course would allow a holder of an index option to avoid the risk of having to settle an exercise index option which has been adversely adjusted by selling the option instead of exercising it. In its filing, OCC also stated that the extraordinary circumstances exception was designed to temper the operation of its rules respecting inaccurate index values whenever it would be grossly unfair to both exercising and assigned parties to require settlement based on a reported index value that is clearly erroneous.

**Determinations Regarding OCC's Proposed Index Options Clearing Rules**

Under Section 19(b)(2) of the Act, the Commission must approve OCC's proposed rule change if the Commission

Index will be $100, and on the Amex Market Value Index will be $500.

[19] Because each index has a unique index multiplier and volatility range, OCC has chosen different minimum margin ranges for each index option contract currently proposed to be traded. As a precaution, with the exception of the NYSE utility index, OCC has determined to set the minimum margin ranges at a higher level than that called for by the proposed rule. The minimum margin amount range for options on NYSE Industrial Index, on the NYSE Transportation, NYSE Financial Index and on the NYSE Composite Index will be between $200–$50 and on the Amex Market Value Index will be between $500–$100.

[20] A contract is in-the-money if the exercise price is less than (in the case of calls) or is greater than (in the case of puts) the market price of the underlying security.

[21] The maximum dollar amount that can be required as a minimum margin cushion is reduced by 25% for each percentage point a contract is out-of-the-money, down to a base of $25 (or whatever other range limit OCC has set).

[22] In order to allow the deposit of underlying securities as cover in lieu of margin on short call positions, OCC would have to require clearing members to deposit the underlying securities in relative proportions to their representation in the index. OCC believes that the administration of such a covered call program, at this time would be excessively cumbersome. However, the Commission understands that the exchanges may propose that the Federal Reserve Board adopt special rules to permit representative deposits for customer margin purposes. In its filing, OCC stated that if such rules are adopted, OCC will consider amending its rule accordingly.

[23] OCC anticipates that such events would include mergers or liquidations of particular securities represented in the underlying index or, in the case of a weighted index, a change in the significance of a particular security which has become relatively less or more important in a group of securities which the index purports to measure.

[24] The exchanges make, or propose to make, daily adjustments in their indices to reflect capitalization changes which occur as a result of delistings, mergers, liquidations or new listings by modifying the pre-established index divisor. In addition, the exchanges plan to make adjustments daily for share capitalization changes as a result of stock splits and stock dividends. Accordingly, it is highly unlikely that OCC would ever need to use its adjustment authority.

[25] In the event an adjustment is required, OCC's Securities Committee will decide the terms of such adjustment. (OCC's Securities Committee is comprised of the Chairman of OCC, plus two designated representatives of each exchange on which option contracts in the underlying index are traded.)

[26] For example, if an index was correctly reported as ranging from 98 to 102 during the trading day, but, due to a mechanical error, the closing index level was erroneously reported as 1,002, OCC would adjust the index value.

[27] With an executed trade both parties have agreed to the terms, albeit based on an inaccurate index value. In contrast, submitting an exercise notice based upon an inaccurate index value is a unilateral act that usually occurs after the close of trading. Therefore, permitting a holder to exercise based on a reported index value that is clearly erroneous after the close of trading would enable the exercising holder to take unfair advantage of an index option writer.

finds that it is consistent with the requirements of the Act and the rules thereunder applicable to registered clearing agencies. The principal provisions of the Act applicable to clearing agencies are contained in Section 17A. Paragraph (b)(3) of that Section requires that the rules of a clearing agency, among other things, be designed: (i) "To promote the prompt and accurate clearance and settlement of securities transactions," (ii) "to assure the safeguarding of funds and securities which are in the custody or control of the clearing agency," (iii) "to foster cooperation and coordination with persons engaged in the clearance and settlement of securities transactions," and (iv) "to remove impediments to and perfect the mechanism of a national system for the prompt and accurate clearance and settlement of securities transactions, and, in general, to protect investors and the public interest."

The Commission has determined that the proposed rules respecting index options, in general, are consistent with the requirements of the Act. Specifically, OCC's procedures for money settlement of exercised index option transactions are identical to OCC's efficient money settlement procedures used with respect to options purchase and sale transactions. Because OCC's daily money settlement figures will represent a net cash amount with respect to each exercised index option contract in each account, OCC's netting procedures will minimize the number of separate settlements otherwise necessary. The Commission has also determined that OCC's proposed rules provide for the safe and prompt resolution of fails consistent with OCC's existing suspension and liquidation rules. Additionally, the Commission believes that OCC has proposed reasonable solutions in the event a current index value is unreported or unavailable. With respect to an unreported or otherwise unavailable index value, it seems appropriate for OCC to postpone settlement pending the announcement of an accurate index value to be made available or, of that value is not forthcoming within a reasonable period of time, to fix settlement amounts based on the best available information. Accordingly, the Commission believes that OCC's systems for processing and settling index option exercises will promote the prompt and accurate clearance and settlement of securities transactions, consistent with Section 17A of the Act.

In addition, in making the determination that the proposed rule change is consistent with the Act, the Commission has carefully considered three areas of concern raised by the proposed rule change: (1) Adequacy of OCC margin for index option contracts; (2) adjustment by OCC to the terms of index opetions contracts; and (3) inaccuracy of reported index values.

*OCC Margin Requirements for Index Options*

OCC has selected the "minimum margin approach", approved by the Commission in respect of debt options and foreign currency options, for index options. Accordingly, OCC's margin proposal sets forth only minor changes which reflect differing volatility rates for index options and technical differences between index options and other kinds of options contracts. Generally, this approach requires clearing members (i) to deposit margin on unassigned short positions equal to the current market price of the option plus a minimum margin amount; and (ii) in the event OCC directs,[28] (a) to deposit margin on assigned short positions equal to the difference between the exercise price and the current index value of the underlying index plus a minimum margin amount; and (b) to deposit margin on out-of-the-money net long exercised positions equal to the negative difference between the exercise price and the current index value plus a specified dollar amount.

OCC stated that it believes that the minimum margin approach for index options is preferable to the "specified-percentage-of-market-price margin approach" it uses with respect to equity options [29] for two reasons. First, OCC contends that the adequacy of protection afforded by typing margin to premiums, as OCC does for equity options, depends on the relationship between premium levels and the price of the underlying financial instrument. OCC asserts that when premium levels are high relative to the market value of the underlying financial instrument, as in the case of equity options, the percentage-of-market-price margin approach provides adequate protection against market movement. When the premiums are low relative to the market value of the underlying financial instrument, however, as is expected to be the case with index options, the percentage-of-market-price margin approach may not produce adequate margin for all options series. Second, OCC believes that the minimum margin approach is preferable because, unlike the percentage-of-market value approach, the proposed approach does not require excess margin for deep-in-the-money option positions.

In addition, OCC believes that the minimum margin amounts selected for each of the index option contracts are adequate to protect OCC and its clearing members. OCC stated that the specific minimum margin amounts are based on a three month sample calculation run performed by OCC on market movements in the index value of each of the underlying indices. That run revealed that, on average, OCC would be fully protected against a one-day market movement in the current index value on more than 95% of the days for each of the indices other than the Amex Market Value Index, and for that index would be protected against a one-day market movement on more than 90% of the days.[30] Further, in those instances in which the market moves more than the minimum margin amount, OCC would invoke a same-day variation margin call pursuant to existing rules.[31]

The Commission believes that OCC's proposed margin rules with respect to index options appear adequate to protect OCC. As in the case of equity and all other non-equity options, OCC appropriately will require clearing members to deposit margin with respect to unassigned short positions. In addition, although unique, OCC's decision not to require margin on exercised and assigned positions seems appropriate. Because OCC's liability respecting exercised index options contracts is fixed at the close of trading on the day of exercise, OCC bears only a one-day market risk. Although OCC will not collect margin on assigned positions, it will retain margin it receives on the trading day preceding the assignment in respect of those short positions, and, as OCC's calculations indicate, that margin will be adequate to protect OCC fully against projected market movement that occurs on the

[28] As stated in the text preceding note 17, *supra*, OCC will generally not collect margin on exercised and assigned index options contracts.

[29] The formula for margin on short positions in equity options requires participants to deposit 130% of the market price of an offsetting long contract. That margin deposit requirement provides OCC with a 30% cushion to guard against adverse daily makret movement.

[30] Since trading in index options has not begun, OCC can only project the relationship between market movement in the price of the underlying index value and the volatility of premium levels. Nonetheless, OCC believes that its margin amounts for unassigned short positions are likely to be realistic.

[31] Existing OCC Rule 609 (variation margin) authorizes OCC to require the deposit of additional margin in respect of short positions, whenever OCC believes it is advisable, to accommodate changes in the market price occurring during the course of the day.

day of exercise 95% of the time. Moreover, since money settlement of index options will occur by 10:00 a.m. EST on the day following exercise and assignment, settlement will occur at about the same time OCC would receive additional margin payments attributable to market movement on the day of exercise. Accordingly, OCC will be protected under its proposed index option margin program in ways consistent with its existing margin programs since, as a practical matter, OCC will learn of a fail to settle no later than the time it would otherwise learn of a fail to pay margin. In addition, in those instances in which settlement (and thus OCC's calculation of the settlement amount) is delayed as a result of an inaccurate index value, OCC will be able to require margin on exercised and assigned positions. Finally, OCC is authorized, pursuant to its variation margin rule, to call for margin anytime OCC beleives it is necessary to protect the interest of OCC, including instances in which the index value moves significantly on the day of exercise.

The Commission also believes that OCC's selected minimum margin levels for presently proposed index options appear appropriate to protect the interest of OCC and its members. In addition, margin programs subsequently proposed by OCC respecting options on additional stock indices should be filed separately as proposed rule changes pursuant to Rule 19(b)(4) under the Act before trading in those new options commences. Furthermore, OCC's proposal provides that OCC may prescribe greater amounts of minimum margin as circumstances require, and OCC has authority under this proposal to raise the minimum margin amount whenever OCC deems it necessary. Finally, we note OCC's plan to review the adequacy of its margin levels periodically and to use its authority to adjust them as necessary. Accordingly, the Commission has determined that the proposed margin rules are consistent with the requirements of the Act.

*Adjustments by OCC To Index Options*

OCC ordinarily will not alter the provisions of outstanding options contracts when changes occur in the underlying index. It is essential, however, that OCC retain the right to adjust the terms of such contracts when extraordinary circumstances make such adjustments necessary to protect the interests of holders and writers of the affected index options. Such circumstances would include unusual changes in the composition of an underlying index that OCC believes are not properly reflected in the daily adjustment of the index value as calculated by the exchange.[32] In addition, because the composition of an underlying index may change in ways OCC cannot anticipate, OCC's procedures must be structured flexibly to give OCC authority to alter the terms of index options contracts as suitable.

The proposed rule change would give OCC authority, in response to material changes in the composition of the underlying index, to make adjustments in the current index value of the affected index option contracts or to take such other actions with respect to such contracts as OCC's Securities Committee determines to be "fair". The Commission believes that the proposed rule change is appropriately designed to afford OCC flexibility to alter the terms of option contracts when necessary without permitting unguided discretion. Notably, OCC's Securities Committee will be composed of the chairman of OCC and two representatives of each Exchange on which the affected index option contract is traded. While the Securities Committee has authority to determine, in its sole discretion, when an adjustment is in order and what that adjustment should be, the Committee will be obligated by OCC's proposed rule to make adjustments that are "fair" to option holders and option writers alike. Although the Commission recognizes that a "fairness" standard is flexible, it is clearly in the interest of OCC and the Exchanges to make adjustments that market participants will perceive to be fair. Moreover, because it would be difficult for OCC to anticipate all the possible kinds of changes that may occur in the composition of the index or to anticipate what effect each change may have on all index option contracts, the Commission believes that the structure of the Securities Committee and the limitations inherent in the Committee's mandate afford sufficient discipline and are consistent with the Act. Nonetheless, because OCC's adjustment authority is unique in its application to index options, the Commission directs OCC to inform it of any action taken pursuant to its adjustment authority, any problems that develop as a result of any such adjustment and any response OCC proposes to address those problems.

The Commission recognizes that not all writers and holders of index option contracts will find a particular adjustment to be "fair". The Commission, however, views this risk as one inherent in trading index options and, accordingly, believes that OCC has chosen properly to address the possibility of adjustments to the terms of index options contracts in its risk disclosure document.

*Inaccurate Index Value*

The Commission believes that OCC's proposed procedures respecting inaccuracy of a reported index value are appropriate. As discussed, OCC will, in most instances, use the index value initially reported by the official reporting authority as accurate and final for the purposes of calculating exercise settlement amounts. Generally, under the proposed rule, OCC will not adjust the current index value in response to minor inaccuracies in or revisions to the index value as initially reported. OCC's proposed procedures, however, will allow OCC to adjust the reported current index value when the value is clearly erroneous and inconsistent with values reported during the trading day, provided a corrected closing index is promptly announced. OCC will not adjust officially reported current index values once exercised options have settled.

The Commission believes that OCC appropriately will presume that a reported index value is accurate. Such a presumption minimizes the potential disparity in treatment between persons who trade index options based on incorrectly reported index values and persons who exercise based on the erroneous value.[33] Because there should be a strong correlation between the market value of a contract and cash settlement of exercised index options contracts, it seems particularly appropriate in the case of index options to treat options traders, exercising holders and assigned writers similarly in respect of adjustments based on reporting inaccuracies. In addition, because, by definition, OCC will adjust only large errors in the reported index value, the financial interest of both

[32] The Commission believes that OCC would have reason to use its adjustment authority only in extraordinary circumstances. At this time, the Commission anticipates that OCC would need to use its adjustment authority only when a trading halt exists during the option expiration period in a security whose relative weight represents a substantial portion of the index value. In such instances if the value of the affected security was not appropriately represented in the calculation of the index value, option holders exercising during the trading halt would be required, absent appropriate adjustment by OCC, to settle based on the skewed index value. The Commission is concerned that if OCC used its adjustment authority in other situations the effect would be an adjusted exercise settlement price that would be different from an exercise settlement price based on the ongoing index value, resulting in unequal treatment of persons who continue to hold their option contracts rather than exercise them.

[33] See discussion in text accompanying note 27, *supra*.

option holders and option writers should be substantially unaffected by OCC's policy not to adjust small errors in reported values.

While the proposed rule provides OCC with substantial descretion in determining when extraordinary circumstances exist, the Commission believes that it is important for OCC to have the authority to adjust clearly erroneous index values to avoid substantial inequities that could otherwise result. The Commission also recognizes that OCC is granted substantial discretion, under the proposed rule change, to determine when a reported index value is clearly erroneous. However, because it is impossible to determine in advance what kinds of errors may occur in reported index values and what magnitude of error would result in gross inequities, that degree of discretion seems necessary to enable OCC at the outset of trading in index option contracts to protect the interests of writers and holders alike.[34]

In addition, the Commission believes that OCC appropriately limits the operation of the extraordinary circumstances exception for unsettled exercised contracts to instances in which the corrected value is promptly announced. Under existing rules, of course, OCC may suspend settlement whenever suspension is necessary to protect the interest of OCC, its clearing members and the public. Accordingly, even when there is unanticipated delay in the announcement of a corrected value, OCC is unlikely to base settlement amounts on clearly erroneous values.

Finally, the Commission views OCC's authority to adjust inaccurate index values to be an important factor affecting index options and accordingly believes that OCC has appropriately addressed the remote possibility of adjustments to the terms of options contracts in its disclosure document regarding index options. Moreover, the publication of index values is a matter beyond OCC's control. Accordingly, although OCC must have some adjustment authority, OCC has proposed appropriately to remedy problems caused by incorrect reports in ways that appear both practical and equitable. The Commission believes, however, that because OCC's procedures respecting inaccurate index values are both novel and highly discretionary, it is difficult to evaluate prospectively the impact of such procedures. We therefore direct OCC to inform the Commission of any actions taken pursuant to the inaccurate index value procedures, any problems that develop as a result of invoking those procedures and any responses OCC proposes to readdress those problems.

[34] It should also be noted that index option clearing members may revoke exercise notices, prior to the time OCC deems such notices irrevocable, whenever an exercise notice is submitted in reliance on a reported value OCC determines to be clearly erroneous. OCC Rule 801 provides that exercise notices filed by a clearing member attributable to bona fide errors may be modified or revoked prior to 8:00 p.m. e.s.t.

**Conclusion**

The Commission has carefully reviewed OCC's proposal and believes that the proposed rules appear suitably designed at the outset of trading to provide for the safe and efficient clearance and settlement of index options. In particular, the Commission believes that the proposed margin levels for index options are appropriately based on realistic volatility models of the underlying indices and should help ensure that OCC is reasonably protected in processing and settling index options transactions. In addition, OCC's proposed exercise settlement system is modeled after OCC's premium settlement program and, as such, will be consistent with the orderly processing of index option exercises. Further, OCC's rule respecting adjustments in the terms of index option contracts appears suitably designed to ensure an orderly and equitable response to changes in the composition of the underlying index that may affect the current index value. Finally, the alternative courses of action OCC may pursue if an index value is unavailable or clearly erroneous appear appropriate to protect the interests of writers and holders of affected index options.

In accordance with the foregoing, the Commission finds that the proposed rule change is consistent with the requirements of the Act and the rules and regulations thereunder applicable to registered clearing agencies, and, in particular, the requirements of Section 17A of the Act.

It is therefore ordered, pursuant to Section 19(b)(2) of the Act, that the proposed rule change be, and it hereby is, approved.

By the Commission, by the Division of Market Regulation pursuant to delegated authority.

George A. Fitzsimmons,

*Secretary.*

[FR Doc. 83-3593 Filed 2-9-83; 8:45 am]

BILLING CODE 8010-01-M

**[Release No. 19485; (SR-PSE-83-02)]**

## Self-Regulatory Organizations; Pacific Stock Exchange, Inc.; Filing of Proposed Rule Change

February 3, 1983.

The Pacific Stock Exchange, Inc. ("PSE") 618 South Spring Street, Los Angeles, California 90014, submitted on January 21, 1983, copies of a proposed rule change pursuant to Section 19(b)(1) of the Securities Exchange Act of 1934 ("Act") and Rule 19b-4 thereunder, to impose charges which are applicable to PSE specialists and option market makers in connection with the execution of trades through the Intermarket Trading System ("ITS"). Specifically, these charges would include a fixed charge of $250 per month on each specialist and option market maker and a charge of $.005 per share on the net number of shares executed by each specialist and option market maker, as principal, through ITS in market centers other than the PSE.[1]

The PSE indicates that the purpose of the proposed rule change is to offset, in part, the costs associated with the PSE providing ITS services, including manpower, systems and utilities costs.[2] In addition, the PSE believes that the per share charge is fashioned in a manner so as to encourage PSE specialists and option market makers to disseminate competitive quotations within ITS, thereby attracting order flow from other market centers to the PSE.

The PSE's proposed rule change raises the issue of what, if any, fees are appropriate for an individual self-regulatory organization to impose on its members in connection with the operation of a national market system facility.[3] In this respect, the Commission

[1] The net number of shares executed as principal by each specialist and option market maker would be calculated by computing the number of shares received by a specialist or option market maker as principal from other market centers through ITS and subtracting that number from the number of shares sent to other market centers through ITS by each specialist or option market maker. Any shares sent to other market centers or received from other market centers, in response to a pre-opening administrative message in accordance with the ITS Plan would not be applied in calculating the net monthly share total of each specialist and market maker. Each specialist and option market maker would receive credit for the number of shares in any given month received by such specialist or option market maker as principal in excess of the number of shares sent to other market centers by such specialist or option market maker in that same month. Credits would be carried over for use in following month[s].

[2] The Commission understand that the PSE views these costs as also involving the costs of operating the PSE quotation system.

[3] Although the Commission has approved ITS related charges in the past, those charges are distinguishable from the PSE's proposed rule

must determine whether the proposed rule change is consistent with the development of a national market system.[4] In this connection, the Commission would be concerned if any such fee acts as a disincentive to the use of a national market system facility or otherwise interferes with best and efficient execution of customers' orders. Accordingly, the Commisison specifically requests comment on whether the PSE's proposed charges are an appropriate method of financing a national market system facility. In addition, the Commission requests comment on whether the proposed charges reflect a "fair and equitable allocation of reasonable * * * charges among * * * members" of the PSE pursuant to Section 6(b)(4) of the Act.[5]

Publication of notice of the proposed rule change is expected to be made in the **Federal Register** during the week of February 7, 1983. In order to assist the Commission in determining whether to approve the proposed rule change, interested persons are invited to submit written data, views and arguments concerning the submission within 21 days from the date of publication in the **Federal Register**. Persons desiring to make written comments should file six copies thereof with the secretary of the Commisison, Securities and Exchange Commisison, 450 5th Street, N.W., Washington, D.C. 20549. Reference should be made to File No. SR-PSE-83-02.

Copies of the submission, all written statements with respect to the proposed rule change which are filed with the Commission, and all written communications relating to the proposed rule change between the Commission and any person, other than those which may be withheld from the public,[6] will be available for inspection and copying at the Commission's Public Reference Room.

For the Commission, by the Division of Market Regulation, pursuant to delegated authority.[7]

**George A. Fitzsimmons,**

*Secretary*

[FR Doc. 83-3594 Filed 2-9-83; 8:45 am]

BILLING CODE 8010-01-M

change. In Securities Exchange Act Release No. 16257 (October 9, 1979), 44 FR 59690, the Commission approved a Boston Stock Exchange ("BSE") Clearing Corporation ("BSECC") proposed rule change which imposed a $.02 per share charge on BSECC members that cleared and settled transactions which resulted from commitments to trade sent from the BSE to another market center through ITS. In approving the rule change, the Commission observed that the charge was "not a direct ITS fee, but rather a clearance and settlement charge which results from unique problems" at the BSECC. In Securities Exchange Act Release No. 18414 (January 12, 1982), the Commission approved a BSE rule change which imposed a usage charge of $.005 per share on all trades resulting from BSE market participants exporting their orders to other market centers via ITS, effective for the period January 4, 1982 through December 31, 1982. The Commission noted that, although this was an ITS usage charge, the charge was appropriate because of its temporary nature and in light of the unique financial situation of the BSE. Moreover, the Commission indicated that the approval of the rule change did not "represent a Commission position regarding the broader question of the propriety of exchange-imposed ITS usage fees, in general." On January 31, 1983, the BSE filed a rule change with the Commission, effective upon filing pursuant to Section 19b(3)(A) of the Act, extending the BSE's ITS fee until December 30, 1983.

[4] *See* Section 11A(a) (1) and (2) of the Act.

[5] The Commission also seeks comment on whether it is appropriate for the incidence of the charges to fall solely on PSE specialists and option market makers, and whether it is suitable to impose a fixed fee and a variable per share fee. In addition, the Commission requests comment on the question of whether the proposed charges would act as a significant disincentive to the use of ITS. If commentators believe that such disincentives will arise, they should indicate whether the disincentives would be caused primarily by: (1) The nature of the charges, (2) the persons subject to the charge or (3) the proposed rate structure for the charges.

[6] 17 CFR 240.24b-2.

[7] 17 CFR 240.200.30-3(a)(12).

## DEPARTMENT OF STATE

[CM-8/603]

### Subcommittee on Safety of Life at Sea Shipping Coordinating Committee; Meeting

The Subcommittee on Safety of Life at Sea of the Shipping Coordinating Committee will conduct two open meetings in the near future. The first will be on February 25, 1983, at 1:00 P.M., in room 3201 of the Coast Guard Headquarters Building, 2100 2nd Street, SW, Washington, D.C. 20593.

The purpose of this meeting will be to discuss the agenda for the fiftieth session of the IMO Legal Committee which will be held March 7-11, 1983 in London. Major items on the agenda are:

—Revision of the 1969 Civil Liability and 1971 Fund Conventions concerning liability and compensation for pollution damage from incidents involving seagoing tankers, and

—Consideration of the Draft Convention on Liability and Compensation in connection with the Carriage of Noxious and Hazardous Substances by Sea.

For further information contact Captain Frederick F., Burgess, Jr., Chief, Maritime & International Law Division, U.S. Coast Guard (G-LMI), 2100 2nd Street, SW, Washington, D.C. 20593. Telephone: (202) 426-1527.

The National Committee for the Prevention of Marine Pollution (NCPMP) of the Shipping Coordinating Committee will hold a second meeting on March 10, 1983, at 9:30 A.M., in room 3201 of the U.S. Coast Guard Headquarters Building, 2100 2nd Street, SW, Washington, D.C. 20593.

The puropose of this meeting is to finalize preparations for the 18th Session of the Marine Environment Protection Committee (MEPC) of the International Maritime Organization (IMO) which is scheduled for March 21-25, 1983 in London. In particular, the MCPMP will discuss development of U.S. positions dealing with, inter alia, the following topics:

—Uniform interpretation and proposed amendments of MARPOL 73/78

—Guideline for surveys under MARPOL 73/78

—Anti-Pollution Manual

—Provision of reception facilities

For further information contact Mr. G. P. Yoest, U.S. Coast Guard Headquarters (G-CPI), 2100 2nd Street, SW, Washington, D.C. 20593. Telephone: (202) 426-2280.

Members of the public may attend both meetings up to the seating capacity of the room.

Dated: January 27, 1983.

**Gordon S. Brown,**

*Chairman, Shipping Coordinating Committee.*

[FR Doc. 83-3658 Filed 2-9-83; 8:45 am]

BILLING CODE 4710-07-M

[CM-8/602]

### Study Group 4 of U.S. Organization for International Radio Consultative Committee (CCIR); Meeting

The Department of State announces that Study Group 4 of the U.S. Organization for the International Radio Consultative Committee (CCIR) will meet on March 16, 1983 at 10:00 a.m. in the first floor Theater, Communications Satellite Corporation, 950 L'Enfant Plaza, SW., Washington, D.C.

Study Group 4 deals with matters relating to systems of radio-communications for the fixed service using satellites. The purpose of the meeting is to outline specific work programs, identifying documentation and authors, in preparation for the international meeting of Study Group 4 in April 1984.

Members of the general public may attend the meeting and join in the discussions subject to instructions of the Chairman. Requests for further information should be directed to Mr.

Gordon Huffcutt, State Department, Washington, D.C. 20520, telephone (202) 632-2592.

Dated: February 1, 1983.

**Gordon L. Huffcutt,**

*Chairman, U.S. CCIR National Committee.*

[FR Doc. 83-3657 Filed 2-9-83; 8:45 am]

BILLING CODE 4710-07-M

## TENNESSEE VALLEY AUTHORITY

### Paperwork Reduction Act of 1980; Form Under Review by the Office of Management and Budget

**AGENCY:** Tennessee Valley Authority.

**ACTION:** Form Under Review by the Office of Management and Budget.

**SUMMARY:** The Tennessee Valley Authority (TVA) has sent to OMB the following proposal for the collection of information under the provisions of the Paperwork Reduction Act of 1980 (44 U.S.C. Chapter 35).

Requests for information, including copies of the form proposed and supporting documentation, should be directed to the Agency Clearance Officer whose name, address, and telephone number appear below. Questions or comments should be directed to the Agency Clearance Officer and also to the Office of Information and Regulatory Affairs, Office of Management and Budget, Washington, D.C. 20503, Attention: Desk Officer for Tennessee Valley Authority, 395-7313.

*Agency Clearance Officer:* John O. Catron, Tennessee Valley Authority, 100 Lupton Building, Chattanooga, TN 37401; (615) 751-2523, FTS 858-2523.

*Type of Request:* New.

*Title of Information Collection:* TVA Columbia Project Wildlife Associated User Survey (Forms TVA 20031 through TVA 20035).

*Frequency of Use:* Monthly/Annually/Nonrecurring.

*Type of Affected Public:* Hunting and fishing users of TVA Columbia Project lands and water.

*Standard Industrial Classification:* N/A.

*Small Businesses or Organizations Affected:* No.

*Federal Budget Functional Category Code:* 452.

*Estimated Number of Annual Responses:* 8,712.

*Estimated Total Annual Burden Hours:* 2,901.

*Estimated Annual Cost to Federal Government:* $42,000.

*Need For and Uses of Information:* Analyses to date have addressed habitat losses or gains resulting from the TVA Columbia Project. Updated and more extensive quantitative data regarding public use is needed to assess demand for hunting, fishing, trapping, and other nonconsumptive uses. Information collected on type and extent of user pressure will be used to develop future wildlife management strategies based upon demand for specific activities and to evaluate the results of habitat improvement actions.

Dated: February 2, 1983.

**John W. Thompson,**

*Assistant General Manager, Senior Agency Official.*

[FR Doc. 83-3597 Filed 2-9-83; 8:45 am]

BILLING CODE 8120-01-M

## DEPARTMENT OF TRANSPORTATION

### Federal Aviation Administration

### Advisory Circular on Doors Between Pilot's Compartment and Passenger Cabin in Small Airplanes

**AGENCY:** Federal Aviation Administration (FAA), DOT.

**ACTION:** Draft advisory circular availability and request for comments.

**SUMMARY:** The draft Advisory Circular (AC) sets forth an acceptable means, but ot the only means, of showing compliance with the Federal Aviation Regulations applicable to a door between pilot's compartment and passenger cabin in small airplanes.

**DATE:** Commenters must identify file AC 23.807-AB, Subject: Doors Between Pilot's Compartment and Passenger Cabin in Small Airplanes, and comments must be received on or before March 28, 1983.

**ADDRESS:** Send all comments on the draft Advisory Circular to: Federal Aviation Administration, ATTN: Regulations and Policy Office (ACE-110), 601 East 12th Street, Kansas City, Missouri 64106.

**FOR FURTHER INFORMATION CONTACT:** Mr. Ervin E. Dvorak, Aerospace Engineer, Regulations and Policy Office (ACE-110), Aircraft Certification Division, Federal Aviation Administration, 601 East 12th Street, Kansas City, Missouri 64106. Commercial telephone (816) 374-6941 or FTS 758-6941.

**SUPPLEMENTARY INFORMATION:** Any person may obtain a copy of this draft Advisory Circular by writing to: Federal Aviation Administration, Aircraft Certification Division, Regulations and Policy Office (ACE-110), 601 East 12th Street, Kansas City, Missouri 64106.

**Background**

In accordance with airworthiness regulations, if the pilot's compartment is separated from the passenger cabin by a door that is likely to block the pilot's escape in a minor crash landing, there must be an exit in the pilot's compartment. For airplanes that do not have any other exits in the pilot's compartment, questions were raised pertaining to a door that would not be likely to block the pilot's escape. Curtains were used in the past, but recently several small airplanes presented for type certification had frangible doors or rigid doors between the pilot's compartment and cabin. This advisory circular provides two methods of showing compliance with airworthiness regulations that the door(s) would not block the pilot's escape in a minor crash landing.

**Comments Invited**

Interested parties are invited to submit comments on the draft AC. Comments received on the draft AC may be inspected at the offices of the Regulations and Policy Office (ACE-110), Room 1656, Federal Office Building, 601 East 12th Street, Kansas City, Missouri, between the hours of 7:30 a.m. and 4 p.m. on weekdays, except Federal holidays.

Issued in Kansas City, Missouri, January 18, 1983.

**Murray E. Smith,**

*Director, Central Region.*

[FR Doc. 83-3570 Filed 2-9-83; 8:45 am]

BILLING CODE 4910-13-M

### Radio Technical Commission for Aeronautics (RTCA); Special Committee 136—Installation of Emergency Locator Transmitters (ELT) in Aircraft; Subcommittee on Battery Problems; Meeting

Pursuant to section 10(a) (2) of the Federal Advisory Committee Act (Pub. L. 92-463; 5 U.S.C. App. I) notice is hereby given of a meeting of Special Committee 136, Subcommittee on Emergency Locator Transmitter Battery Problems, to be held on March 10-11, 1983 at National Aeronautics & Space Administration, Langley Research Center, Room 246, Building 1202, Hampton, Virginia, commencing at 9:30 a.m.

The Agenda for this meeting is as follows: (1) Chairman's Introductory Remarks; (2) Review of Subcommittee Statement of Work; (3) Discussions to Identify Practical Battery Types for Use in Emergency Locator Transmitter (ELT) Applications; (4) Discuss Advantages

and Disadvantages of Potting cells in Constructing Batteries for ELT use; (5) Discuss Effectiveness of Using Cold Storage to Extend Battery Shelf Life; (6) Discuss Technical Parameters Required of Replacement ELT Batteries; (7) Establish Format and Content of Subcommittee Report; (8) Assignment of Tasks; and (9) Other Business.

Attendance is open to the interested public but limited to space available. With the approval of the Chairman, members of the public may present oral statements at the meeting. Persons wishing to present statements or obtain information should contact the RTCA Secretariat, 1425 K Street, NW., Washington, D.C. 20005; (202) 682-0266. Any member of the public may present a written statement to the committee at any time.

Issued in Washington, D.C. on February 3, 1983.

**Karl F. Bierach,**

*Designated Officer.*

[FR Doc. 83-3568 Filed 2-9-83; 8:45 am]

BILLING CODE 4910-13-M

## Radio Technical Commission for Aeronautics (RTCA); Ad Hoc Technical Review Committee; Meeting

Pursuant to Section 10 (a) of the Federal Advisory Committee Act (Pub. L. 92-463; 5 U.S.C. App I) notice is hereby given on a meeting of an RTCA Ad Hoc Technical Review Committee to be held on March 8, 1983 in the RTCA Conference Room, Suite 500, 1425 K Street, NW., Washington, D.C. commencing at 9:30 a.m.

The purpose of the meeting is to review technical comments received by the Federal Aviation Administration (FAA) in response to a proposed Technical Standard Order (TSO) C102, Airborne Radar Approach and Beacon Systems for Helicopters as announced in the **Federal Register** on June 21, 1982, (47 FR 26725). The proposed TSO incorporates, by reference, minimum performance standards set forth in RTCA Document DO-172 "Minimum Operational Performance Standards for Airborne Radar Approach and Beacon Systems for Helicopters," Section 2, dated November 1980.

The Ad Hoc Technical Review Committee is to determine whether the affected minimum performance standards should be changed, and to provide any additional information needed prior to FAA action.

The following technical matters will be considered:

(1) Redefine the Beacon Identification Processor requirements to resolve apparent misinterpretation.

(2) Revison to the ground beacon receiver sensivtiy from the specified value of −85 dbw (−55 dbm) to −95 dbw (−65 dbm) to permit a reduction in airborne transmitter power.

(3) Revision to the maximum allowable Beacon Interrogation Pulse rise time from the specified value of 150 nanoseconds to 300 nanoseconds.

Attendance is open to the interested public but limited to space available. With the approval of the Chairman, members of the public may present oral statements at the meeting. Persons wishing to present statements or obtain information should contact the RTCA Secretariat, Suite 500, 1425 K Street, NW., Washington, D.C. 20005; (202) 682-0266. Any member of the public may present a written statement to the committee at any time.

Issued in Washington, D.C. on February 3, 1983.

**Karl F. Bierach,**

*Designated Officer.*

[FR Doc. 83-3569 Filed 2-9-83; 8:45 am]

BILLING CODE 4910-13-M

## Office of the Secretary

## Reports, Forms, and Recordkeeping Requirements; Submittals to OMB, January 16-28, 1983

**AGENCY:** Department of Transportation (DOT), Office of the Secretary.

**ACTION:** Notice.

**SUMMARY:** This notice lists those forms, reports, and recordkeeping requirements, transmitted by the Department of Transportation, between January 16-28, 1983, to the Office of Management and Budget (OMB) for its approval. This notice is published in accordance with the requirements of the Paperwork Reduction Act of 1980 (44 U.S.C. Chapter 35).

**FOR FURTHER INFORMATION CONTACT:** John Windsor, John Chandler, or Annette Wilson, Information Requirements Division, M-34, Office of the Secretary of Transportation, 400 7th Street, SW., Washington, D.C. 20590, (202) 426-1887 or

Gary Waxman or Wayne Leiss, Office of Management and Budget, New Executive Office Building, Room 3001, Washington, D.C. 20503, (202) 395-7313.

**SUPPLEMENTARY INFORMATION:**

### Background

Section 3507 of Title 44 of the United States Code, as adopoted by the Paperwork Reduction Act of 1980, requires that agencies prepare a notice for publication in the **Federal Register**, listing those information collection requests submitted to the Office of Mangement and Budget (OMB) for approval under that Act. OMB reviews and approves agency submittals in accordance with criteria set forth in that Act. In carrying out its responsibilities, OMB also considers public comments on the proposed forms, reporting and recordkeeping requirements.

On Mondays and Thursdays, as needed, the Department of Transportation will publish in the **Federal Register** a list of those forms, reporting and recordkeeping requirements that it has submitted to OMB for review and approval under the Paperwork Reduction Act. The list will include new items imposing paperwork burdens on the public as well as revisions, renewals and reinstatements of already existing requirements. OMB approval of an information collection requirement must be renewed at least once every three years. The published list also will include the following information for each item submitted to OMB:

(1) A DOT control number.

(2) An OMB approval number if the submittal involves the renewal, reinstatement or revision of a previously approved item.

(3) The name of the DOT Operating Administration or Secretarial Office involved.

(4) The title of the information collection request.

(5) The form numbers used, if any.

(6) The frequency of required responses.

(7) The persons required to respond.

(8) A brief statement of the need for and uses to be made of the information collection.

### Information Availability and Comments

Copies of the DOT information collection requests submitted to OMB may be obtained from the DOT officials listed in the "For Further Information Contact" paragraph set forth above.

Comments on the requests should be forwarded, as quickly as possible, directly to the OMB officials listed in the "For Further Information Contact" paragraph set forth above. If you anticipate submitting substantive comments, but find that more than 5 days from the date of publication is needed to prepare them, please notify the OMB officials of your intent immediately.

**Items Submitted for Review by OMB**

The following information collection requests were submitted to OMB between Jan. 16, 1983, and Jan. 28, 1983:

DOT No: 2040
OMB No: None
By: Research and Special Programs Administration
Title: Radioactive Materials Shippers; Record Retention of Type A Package Certification and Safety Analysis
Forms: None
Frequency: Recurring on occasion
Respondents: Shippers of radioactive materials in Type A quantities
Need/Use: To ascertain that shipments of radioactive materials are in Type A packagings which meet performance standards for normal conditions of transportation

DOT No: 2041
OMB No: None
By: Research and Special Programs Administration
Title: Low Specific Activity Radioactive Materials Instructions
Forms: None
Frequency: Recurring on occasion
Respondents: Shippers of packaged low specific activity radioactive materials in truckload and carload quantities
Needs/Use: To assure compliance with particular rules regarding maintenance of external radiation levels and other safety requirements applicable to shipments of packaged low specific activity radioactive materials when being transported by exclusive-use vehicles

DOT No: 2042
OMB No: None
By: Research and Special Programs Administration
Title: Bulk Low Specific Activity Radioactive Material Instructions
Forms: None
Frequency: Recurring on occasion
Respondents: Shippers of low specific activity radioactive materials in truckload and carload quantities
Needs/Use: To assure compliance with particular rules regarding bulk shipments of low specific activity radioactive materials (unrefined ores, etc.) being transported in exclusive-use vehicles

DOT No: 2043
OMB No: None
By: Research and Special Programs Administration
Title: Fissile Class III Radioactive Materials Specific Instructions
Forms: None
Frequency: Recurring on occasion
Respondents: Shippers of certain radioactive materials which are transported in exclusive-use transport vehicles
Needs/Use: To assure compliance with particular rules regarding distance separation required for packages of fissile class III radioactive materials transported in exclusive-use vehicles

DOT No: 2048
OMB No: None
By: Research and Special Programs Administration
Title: Application for Approval of Export Shipment
Forms: None
Frequency: Recurring on occasion
Respondents: Shippers of radioactive materials which are being exported from the United States
Needs/Use: This application alerts National Competent Authorities in countries through which or into which certain "high level" radioactive materials shipments will be transported so they are aware of the nature of the materials and are satisfied that appropriate packaging and transport controls are utilized

DOT No: 2086
OMB No: 2137-0045
By: Research and Special Programs Administration
Title: Petitions for Rulemaking
Forms: None
Frequency: Nonrecurring
Respondents: Shippers, carriers and manufacturers of hazardous materials; manufacturers of containers for hazardous materials, Federal, State and local government agencies
Needs/Use: To provide a means by which shippers, manufacturers and carriers of hazardous materials, as well as other interested parties, may request changes to the hazardous materials regulations

DOT No: 2108
OMB No: 2127-0047
By: National Highway Traffic Safety Administration
Title: Odometer Disclosure Statement, Part 580
Forms: None
Frequency: On occasion
Respondents: Individuals, States and businesses
Needs/Use: To require any transferor of a motor vehicle to give a written disclosure statement to transferees other than United States agencies on new cars

DOT No: 2116
OMB No: None
By: National Highway Traffic Safety Administration
Title: Alcohol Incentive Grant Program
Forms: None
Frequency: Annually
Respondents: States
Needs/Use: This program provides incentive grants to States that adopt and implement stricter laws and more comprehensive programs against drunk driving

**Karen S. Lee,**
*Deputy Assistant Secretary for Administration.*

[FR Doc. 83-3463 Filed 2-9-83; 8:45 am]
BILLING CODE 4910-62-M

---

**[Notice No. 83-5]**

## Frontier Airlines, Inc.; Renewal of Operations Specifications, Jackson Hole Airport, Wyoming

**AGENCY:** Office of the Secretary, DOT.

**ACTION:** Final decision on renewal of operations specifications.

**SUMMARY:** The purpose of this notice is to inform the public that the Department of Transportation has renewed the authority of Frontier Airlines, Inc. to serve Jackson Hole Airport, Wyoming with regularly scheduled Boeing 737 jet operations, subject to certain conditions. This action was the subject of a notice and request for comments published in the **Federal Register** on November 4, 1982 (47 FR 50155).

**FOR FURTHER INFORMATION CONTACT:** Joseph Canny, Deputy Director for Environment and Policy Review, Office of Economics, U.S. Department of Transportation, 400 Seventh Street SW., Washington, D.C. 20590, (202) 426-4361.

**Background**

The Department of Transportation has received a request from Frontier Airlines, Inc. for renewal of its operations specifications to permit the continuation of regularly scheduled Boeing 737 jet aircraft service at Jackson Hole Airport, Wyoming. The Frontier request seeks to make permanent the existing authority to conduct such operations which expired on January 15, 1983. Frontier also requested elimination of a number of conditions imposed by the Department of Transportation at the time the operations specifications were amended in early 1981. Frontier has continued to operate under its existing authority, pending the final determination which is announced in this notice.

In a notice published in the **Federal Register** on November 4, 1982, (47 FR 50155), which provides further background for this action, the Department of Transportation indicated its tentative intention to grant Frontier's request for permanent authority to operate regularly scheduled B 737 jet service at Jackson Hole and to retain only three of the conditions initially imposed in 1981. These conditions are

the requirement that commercial jet service be restricted to the hours between 6:00 a.m. and 9:30 p.m.; the requirement that the B 737 aircraft used at Jackson Hole be fitted with quiet nacelles to reduce aircraft noise and meet the stage two noise limits set forth in FAR Part 36 (14 CFR Part 36); and the requirement that Frontier ensure the use, to the maximum extent feasible, of established procedures for the abatement of aircraft noise during landings and takeoffs, including an 8.6 percent climb gradient.

In response to that notice, the Department received comments from the following persons or organizations: The United States Department of the Interior, the Honorable Ed Herschler, Governor of Wyoming, the Jackson Hole Airport Board, Frontier Airlines, the Sierra Club Legal Defense Fund, Inc., a group of twenty-five homeowners residing in the immediate vicinity of the Jackson Hole Airport, and one other individual. Also in the record on this matter are letters written in May, 1982 at the time of Frontier's request for an extension of its operations specifications and supporting Frontier's request from the Jackson Hole Area Chamber of Commerce, the town of Jackson, Teton County and a member of the Wyoming state legislature. Of the comments received in response to the November notice, four were in support of the proposed extension of the Frontier authority while three objected in whole or in part to the proposed action.

Frontier, of course, supported the proposal to make permanent the operation specifications and recommended that the hours of operations for its jet aircraft service be described as "scheduled" rather than "permitted." This would recognize that occassional flights might be delayed beyond the normal 9:30 p.m. limit for arrivals. This decision adopts that change, which is consistent with the actual condition under which Frontier has been operating for the past two years. It is the Department's understanding that actual arrivals after 9:30 p.m. have been rare.

The Jackson Hole Airport Board also supports extension of the Frontier's operations specifications. The Board noted that the Department of the Interior has recently indicated its agreement that the Jackson Hole Airport should remain at its current location. The Board also supports Frontier's view that the 9:30 p.m. limit should be for scheduled flights.

Governor Herschler endorsed the proposed action, including the conditions identified in the notice for retention, and the removal of the other conditions that were identified in the notice. The Department of the Interior supports extension of Frontier's authority. Interior has concluded that the airport is necessary for Department of the Interior operations at Jackson Hole and has reversed its prior decision to seek relocation of the airport. Interior concurs strongly in the proposal to limit the hours of jet operations, as provided in the notice, and proposes that this limitation be extended to all commercial aircraft operations. Interior also agrees with the requirement that noise abatement procedures be utilized whenever practicable and that Frontier be required to use 737s with quiet nacelles, as proposed in the notice. Finally, Interior noted a desire to work with the Department of Transportation and the Airport Board to seek additional measures that might assist in controlling noise levels within the National Park.

The Department received three sets of comments opposing the proposed action or suggesting more stringent conditions on Frontier's B 737 operations. Two commentors indicated that the operations specifications either should not be extended or, if extended, should be for a limited period of time during which the effort to locate a new site for the airport should be continued. As noted above, the Department of the Interior no longer is seeking the relocation of the airport outside the National Park. Further, neither the Jackson Hole Airport Board nor any other public agency with authority to construct and operate an airport has given any indication of a desire to relocate the airport. Consequently, this decision recognizes that no further efforts will be made to relocate the airport.

Two commentors also proposed that the renewal of the operations specifications be for a period of two or three years. The Department finds no merit in this proposal. Permanent extension of the operations specifications, subject to the retained conditions, is an adequate and appropriate action to govern continued operations at the airport. The Department does not foresee any conditions that would require changes in the operations specifications after two or three years, and thus sees no reason for refusing to make the specifications permanent. This would not preclude further noise regulation by the Jackson Hole Airport Board in its role as airport operator, if additional regulations are required to protect the tranquility of the area.

Commentors objected to the deletion of the condition that Frontier must use at Jackson Hole any quieter jet aircraft that it may acquire. These comments included claims that quieter non-jet aircraft could adequately serve the airport, and that Frontier should continue to be required to use any quieter technology which may become available for use on B 737 aircraft. The latter approach, it is asserted, would impose no penalty on Frontier but would assure that the quietest feasible equipment would be utilized at Jackson Hole. The Department does not accept these recommendations. First, it is noted that Frontier currently owns and operates a small number of DC 9–80 aircraft. These aircraft are somewhat quieter than the 737s operating at Jackson Hole. However, the DC 9–80s are larger and are substantially less efficient for operation at a small, high altitude airport such as Jackson Hole. At Jackson Hole, DC 9–80 aircraft could carry only 66 passengers on a 40°F day, compared to their designed capacity of 140 passengers. This would make DC 9–80 service economically unfeasible. Further, Frontier is currently using the DC 9–80s in its fleet at other airports where much larger numbers of persons are exposed to aircraft noise. It is the Department's view that Frontier's continued use of the DC 9–80s at those airports better serves the public interest of limiting exposure of people to aircraft noise.

With respect to the use of improved technology on 737 aircraft, the B 737–300 aircraft is a new, quieter, more fuel-efficient version of the 737. However, Frontier does not own any of these planes, does not have them on order, and has no plans to acquire them. Thus, the Department does not believe that any useful purpose would be served by retaining a requirement for their use if purchased by Frontier.

With respect to the proposal that non-jet aircraft be used to serve Jackson Hole, the Department will not question the judgment of Frontier as to what is the most cost-effective and efficient equipment to use at Jackson Hole. Other air carriers are free to provide non-jet service to Jackson Hole, but, with one exception, have not done so. If other airlines wish to commence service to Jackson Hole using quieter aircraft, the Department would have no objection (assuming they meet normal standards), but the Department has no authority to mandate such service.

One commentor recommended that Frontier's hours of jet operations be cut back to the period of 7:00 a.m. to 7:00 p.m. The Department agrees that the limitation can be changed from 6:00 a.m. to 7:00 a.m. Frontier does not have any departures before 7:00 a.m. and there

appears to be some benefit, in terms of promoting quiet conditions in the airport vicinity, in beginning the scheduled operating hours at 7:00 a.m.

With respect to the proposed change in evening operating hours, the adjustment would reduce noise impacts, but it would significantly reduce Frontier's capability of serving Jackson Hole efficiently within the constraints of its overall scheduling and service requirements. A change from a 9:30 p.m. curfew to a 7:00 p.m. curfew could eliminate about 25% of the present commercial service at Jackson Hole. A 9:30 p.m. to 7:00 a.m. exclusion on scheduled jet aircraft operations is comparable to limitations imposed at some other airports and appears to be a reasonable response to the need for nighttime quiet in the vicinity of the airport and in the National Park.

Two commentors questioned whether existing noise abatement procedures specified in the Frontier operations specifications have been followed. One commentor contends that since there is no FAA tower at the airport there is no means for monitoring compliance with the noise abatement procedures. Information provided by the Jackson Hole Airport Authority indicates that Frontier operations were monitored carefully during an 18-month period, in which 1832 jet departures occurred. Some 92 percent of B 737 departures took off to the south—i.e, away from the National Park. Some 81 percent followed the recommended noise abatement procedure of making a 45 degree turn to the left following takeoff (at approximately 500 feet elevation). Of the 11% of departures that did not follow the noise abatement procedures, one-half were due to identifiable conditions such as wind or other traffic in the area. The Airport Board was unable to obtain information as to the reasons for not following noise abatement procedures in the other cases. Aside from seeking explanations from Frontier for deviations from the noise abatement procedures, no effort was made by the Airport Board to take "corrective actions" in instances where the noise abatement procedures were not followed, and indeed, the Board has no authority to enforce conditions in an FAA operations specification. FAA does not have personnel at Jackson Hole to oversee noise abatement procedures because the limited number of operations does not justify a FAA tower. There is no provision in this decision for such oversight.

It is expected that the Airport Board will continue to work closely with Frontier and the surrounding community, as well as with the Department of the Interior, to assure compliance with noise abatement procedures. The Board is in the preliminary stages of developing an airport noise abatement plan under 14 CFR Part 150, Airport Noise Compatibility Planning.

FAA has agreed to fund development of the plan and the Board expects to retain a consultant and commence work by early March. A final plan, including possible enforcement provisions, would be completed in about a year. Under such a plan, the Board, in its role as the airport operator, could impose fines or take other actions against Frontier for violations of the noise abatement procedures.

Another comment proposed that the Department limit the total number of jet operations permitted Frontier. A limit of four daily landings and takeoffs was suggested. As noted in the November, 1982 notice, it is anticipated that Frontier will not schedule more than four daily landings and takeoffs for the foreseeable future, based upon the anticipated demand for service at Jackson Hole. Any increase beyond that level is likely to be gradual and to occur only over a period of at least several years. Further, a limit on the number of jet operations could result in the scheduling of a larger number of non-jet flights to meet passenger demands, with the result that there would be no net noise benefit. Therefore, the Department does not believe it desirable to establish a ceiling on jet operations.

One commentor suggested that the Department delete the previously imposed condition concerning establishment of a restricted airspace zone over the National Park only if there is a written agreement among DOT, Interior and EPA that a restricted zone will be established. The Department does not agree with this recommendation. Establishment of a restricted airspace zone is a matter which is within FAA's sole jurisdiction, and for which there are established procedures. It is not an appropriate item to be included in permanent operations specifications. The Department will work with Interior and will consider establishing a restricted airspace zone over the park, if one is requested by Interior.

Two commentors questioned the steps taken to establish compatible land use patterns in the vicinity of the airport and stated or implied that a condition on this point should be retained in the Frontier operations specifications. The Department does not believe that this is an appropriate condition for premanent operations specification. Responsibility for compatible land use planning lies with the airport operator and the affected local governments, not with the airline. The Department will continue to work with the Airport Board in this area and expects that the FAR Part 150 study will address land use compatibility issues.

One comment stated that the Department's notice had not given adequate recognition to the impact of jet aircraft noise on developed and developable land in the vicinity of the airport. The respondents noted that they had not received replies to previous correspondence with the Department on this matter and requested that the issues from that prior correspondence be addressed prior to a final decision on the Frontier request. The issues raised in the prior correspondence are generally similar to those discussed in this notice and focus particularly on the impacts of jet aircraft noise on the developed and developable land in the vicinity of the airport. The correspondence asks whether FAA was aware that residential development does exist and can continue to take place in close proximity to the runway.

The Department is aware that such development exists. Previous noise studies have reflected the existence of such residential development. The Department notes, however, that cumulative noise levels in the vicinity of the airport are essentially the same as they were prior to introduction of scheduled jet service. Further, these noise levels have not increased significantly during the past several years. Most of the development which has occurred in the vicinity of the airport has presumably been undertaken with full knowledge of these noise levels. The Department must conclude that these noise levels were considered acceptable; otherwise, property owners would not have developed these sites.

The correspondence also requested assurance that the current noise abatement measures pose no hazard to surrounding land uses. The Department can provide such assurance. The noise abatement measures being implemented at Jackson Hole are similar to those in effect in many other locales. As in all such cases, the final decision on whether or not to utilize noise abatement techniques lies with the pilot

of the aircraft and appropriate adjustments can be made and the noise abatement techniques can be avoided in any circumstances in which the pilot determines that the safety of the flight would be affected.

The correspondence also asked for the definition of developed and developable noise sensitive lands. The developable lands are generally identified pursuant to local land use or zoning plans, which are available from the local governments. The Department recognizes the existence of development in the vicinity of the airport and further recognizes that an extensive area to the south and southwest of the runway is currently available for residential development and that a substantial number of residential properties have been developed in this area. The Department believes that the known aircraft operations at Jackson Hole which have existed for more than three decades must be recognized by property owners and potential developers, and that there is a responsibility for those parties to recognize that noise conditions do exist, and to avoid developing lands that are subject to noise impacts unless they are willing to accept those impacts.

The correspondence also requested that the Department make additional noise tests in the vicinity of the airport. As discussed in the environmental assessment, noise tests have been conducted under conditions representative of B 737 operations. The results of those noise tests are included in the assessment. The Department is not aware of any deficiencies in the tests or of any other reason why additional testing is needed. Finally, the correspondence requested information as to whether the problem of weight restrictions on the short runway at a high elevation have been adequately considered by FAA in permitting jets to operate at Jackson Hole. These concerns have been fully taken into account by FAA. The temperatures, elevation, and runway lengths are will within the capability of B 737 aircraft. Under certain weather conditions it may be necessary to operate at less than the full gross weight of the aircraft, but this type of adjustment is routinely made by pilots at many airports.

Two commentors requested that additional environmental documentation be prepared. One suggested that if the operations specifications are to be made permanent, a new environmental impact statement is needed. A second indicated that the respondents had not received a copy of the environmental assessment and suggested that a decision should be deferred until they had reviewed the environmental assessment and had an opportunity to comment on it.

The Department does not agree with either of those comments. With respect to the environmental assessment, the November 4 notice indicated that it was available. A copy of the assessment was sent to one person who requested it and the comments from that person reflected the review of the environmental assessment. Other commentors could have received the environmental assessment upon request, but did not make such a request. With respect to the need for an environmental impact statement, it is the Department's view that the information contained in the environmental assessment is sufficient to demonstrate that the basic environmental impacts outlined in detail in the 1980 final environmental impact statement adequately cover the conditions that exist at the present time and that will continue to exist with operation of B 737 aircraft at Jackson Hole. The Department is not aware, and the commentor did not identify, any factors which would entail environmental impacts significantly different from those covered in the original EIS and reviewed in the environmental assessment. Therefore, there is no legal or policy requirement for a new environmental impact statement at this time.

## Conclusion

In consideration of the foregoing, the Federal Aviation Administrator will make permanent the amendment to Frontier's operations specifications permitting regularly scheduled Boeing 737 jet service at Jackson Hole Airport. The amendment will be subject to the conditions that: (a) The service may be scheduled only between the hours of 7:00 a.m. and 9:30 p.m.; (b) Frontier must use 737s which are equipped with quiet nacelles and which meet the stage two noise limits set forth in FAR Part 36 (14 CFR Part 36); and (c) Frontier must use, to the maximum extent feasible, established procedures for abatement of aircraft noise during landings and takeoffs.

(49 U.S.C. 101 et seq. and 1301 et seq.)

Issued in Washington, D.C. on January 31, 1983.

**Drew Lewis,**

*Secretary of Transportation.*

[FR Doc. 83-3604 Filed 2-9-83; 8:45 am]

BILLING CODE 4910-62-M

## Research and Special Programs Administration

## Applications for Renewal or Modification of Exemptions or Applications To Become a Party to an Exemption

**AGENCY:** Materials Transportation Bureau, DOT.

**ACTION:** List of applications for renewal or modification of exemptions or application to become a party to an exemption.

**SUMMARY:** In accordance with the procedures governing the application for, and the processing of, exemptions from the Department of Transportation's Hazardous Materials Regulations (49 CFR Part 107, Subpart B), notice is hereby given that the Office of Hazardous Materials Regulation of the Materials Transportation Bureau has received the applications described herein. This notice is abbreviated to expedite docketing and public notice. Because the sections affected, modes of transportation, and the nature of application have been shown in earlier Federal Register publications, they are not repeated here. Except as otherwise noted, renewal applications are for extension of the exemption terms only. Where changes are requested (e.g. to provide for additional hazardous materials, packaging design changes, additional mode of transportation, etc.) they are described in footnotes to the application number. Application numbers with the suffix "X" denote renewal; application numbers with the suffix "P" denote party to. These applications have been separated from the new applications for exemptions to facilitate processing.

**DATES:** Comment period closes February 24, 1983.

**ADDRESS COMMENTS TO:** Dockets Branch, Information Services Division, Materials Transportation Bureau, U.S. Department of Transporation, Washington, DC 20590.

Comments should refer to the application number and be submitted in triplicate.

**FOR FURTHER INFORMATION:** Copies of the applications are available for inspection in the Dockets Branch, Room 8426, Nassif Building, 400 7th Street, SW., Washington, DC.

| Application No. | Applicant | Renewal of exemption |
|---|---|---|
| 2805-X | SunOlin Chemical Co., Claymont, DE. | 2805 |
| 3109-X | Raytheon Co., Lowell, MA | 3109 |

| Application No. | Applicant | Renewal of exemption |
|---|---|---|
| 3216-X | Penwalt Corp., Philadelphia, PA | 3216 |
| 3353-X | Kerr-McGee Chemical Corp., Oklahoma City, OK. | 3353 |
| 4242-X | U.S. Department of Defense, Washington, DC. | 4242 |
| 4453-X | Wampum Hardware Co., New Galilee, PA. | 4453 |
| 4726-X | U.S. Department of Energy, Washington, DC. | 4726 |
| 4884-X | Union Carbide Corp., Danbury, CT. | 4884 |
| 5206-X | Atlas Powder Co., Dallas, TX | 5206 |
| 5248-X | 3M Co., St. Paul, MN | 5248 |
| 6007-X | Nuclear Products Co., El Monte, CA. | 6007 |
| 6267-X | Bio-Lab, Inc., Conyers, GA | 6267 |
| 6296-X | American Cyanamid Co., Wayne, NJ. | 6296 |
| 6296-X | Platte Chemical Co., Fremont, NE. | 6296 |
| 6773-X | E. I. du Pont de Nemours & Co., Inc. Wilmington, DE. | 6773 |
| 6774-X | HR Textron Inc., Pacoima, CA | 6774 |
| 6800-X | Plasti-Drum Corp., Lockport, IL (see footnote 1). | 6800 |
| 6883-X | Hedwin Corp., Baltimore, MD (see footnote 2). | 6883 |
| 6958-X | Great Lakes Chemical Corp., El Dorado, AR. | 6958 |
| 7010-X | Great Lakes Chemical Corp., El Dorado, AR. | 7010 |
| 7052-X | Bren-Tronics, Inc., Commack, NY. | 7052 |
| 7249-X | E. I. du Pont de Nemours & Co., Inc., Wilmington, DE. | 7249 |
| 7252-X | E. I. du Pont de Nemours & Co., Inc., Wilmington, DE. | 7252 |
| 7455-X | E. I. du Pont de Nemours & Co., Inc., Wilmington, DE. | 7455 |
| 7495-X | General American Transportation Corp., Chicago, IL. | 7495 |
| 7505-X | Platte Chemical Co., Greeley, CO. | 7505 |
| 7700-X | U.S. Department of Agriculture, Washington, DC. | 7700 |
| 7721-X | Applied Environments Corp., Woodland Hills, CA. | 7721 |
| 7735-X | Rheem Manufacturing Co., Linden, NJ (see footnote 3). | 7735 |
| 7769-X | Brunswick Corp., Lincoln, NB | 7769 |
| 7879-X | Gearhart Industries, Inc., Fort Worth, TX. | 7879 |
| 7957-X | Process Engineering, Inc., Plaistow, NH. | 7957 |
| 8008-X | Wheaton Aerosols Co., Mays Landing, NJ (see footnote 4). | 8008 |
| 8080-X | Allied Chemical, Morristown, NJ (see footnote 5). | 8080 |
| 8086-X | Boeing Aerospace Co., Seattle, WA. | 8086 |
| 8108-X | Allied Chemical, Morristown, NJ | 8108 |
| 8220-X | Applied Environments Corp., Woodland Hills, CA. | 8220 |
| 8221-X | Applied Environments Corp., Woodland Hills, CA. | 8221 |
| 8225-X | Hoover Universal, Inc., Beatrice, NB (see footnote 6). | 8225 |
| 8237-X | Sanders Associates, Inc., Nashua, NH. | 8237 |
| 8426-X | Martin Tank Manufacturing, Inc., Wilmington, CA. | 8426 |
| 8445-X | Rohm & Haas Co., Philadelphia, PA. | 8445 |
| 8519-X | Atlantic Container Line, Elizabeth, NJ. | 8519 |
| 8523-X | Fauvet-Girel, Paris, France | 8523 |
| 8526-X | PPG Industries, Inc., Pittsburgh, PA. | 8526 |
| 8526-X | National Starch and Chemical Corp., Bridgewater, NJ. | 8526 |
| 8539-X | Aero Taxi-Rockford, Inc., Rockford, IL. | 8539 |
| 8547-X | Natico, Inc., Chicago, IL (see footnote 7). | 8547 |
| 8550-X | Environmental Sciences Associates, Inc., Bedford, MA. | 8550 |
| 8551-X | Huber Manufacturing, Inc., Gulfport, MS. | 8551 |
| 8558-X | Trojan Corp., Spanish Fork, UT | 8558 |
| 8563-X | Ashland Oil, Inc., Columbus, OH. | 8563 |
| 8565-X | Pennwalt Corp., Philadelphia, PA. | 8565 |
| 8565-X | PPG Industries, Inc., Pittsburgh, PA. | 8565 |
| 8569-X | General Dynamics Corp., Fort Worth, TX. | 8569 |
| 8571-X | EM Science, Cincinnati, OH | 8571 |
| 8592-X | Beech Aircraft Corp., Boulder, CO. | 8592 |
| 8620-X | Polar Tank Trailer, Inc., Holdingford, MN. | 8620 |
| 8691-X | Aluminum Company of America, Palestine, TX (see footnote 8). | 8691 |
| 8692-X | Mitsubishi International Corp., New York, NY (see footnote 9). | 8692 |
| 8969-X | McDonnell Douglas Corp., St. Louis, MO (see footnote 10). | 8969 |
| 3549-P | Thiokol Corp., Huntsville, AL | 3549 |
| 4453-P | Pacific Powder Co., Tenino, WA | 4453 |
| 4453-P | Pacific Motor Transport, Inc., Tenino, WA. | 4453 |
| 6007-P | The Boeing Co., Seattle, WA | 6007 |
| 6113-P | Commonwealth Gas Co., Southborough, MA. | 6113 |
| 6464-P | Commonwealth Gas Co., Southborough, MA. | 6464 |
| 6762-P | Oxford Chemicals, Inc., Atlanta, GA. | 6762 |
| 6762-P | The Keeler Co., Inc. Shillington, PA. | 6762 |
| 6874-P | Mitsui & Company (USA), Inc., New York, NY. | 6874 |
| 7052-P | A/S Hellesens, Soborg, Denmark. | 7052 |
| 7052-P | Leigh Instruments Limited, Carleton Place, Ontario. | 7052 |
| 7060-P | Sports Air Travel, Inc., Troutdatel, OR. | 7060 |
| 7076-P | Oxford Chemicals, Inc., Atlanta, GA. | 7076 |
| 7876-P | Micro Image Inc., Orange, CT | 7876 |
| 8129-P | ARCO Chemical Co., Newtown Square, PA. | 8129 |
| 8129-P | Midwest Research Institute, Kansas City, MO. | 8129 |
| 8156-P | Scientific Gas Products, Inc., South Plainfield, NJ. | 8156 |
| 8451-P | Ethyl Corp., Ferndale, MI | 8451 |
| 8627-P | Champion Chemicals, Inc., Houston, TX. | 8627 |
| 8732-P | ICI Americas Inc., Wilmington, DE. | 8732 |
| 8878-P | Preussag AG Metall, Boslar, West Germany. | 8878 |

[1] To authorize tertiary butyl hydroperoxide, liquid organic peroxide, n.o.s., as an additional commodity.

[2] To authorize a 60 gallon polyethylene container, comparable to DOT Specification 34, under the terms of the exemption.

[3] To authorize flammable liquids which also meet the definition of poison B liquids, chloropicrin and mixture (no gas), parathion and mixtures and methyl parathion and mixtures as additional commodities.

[4] Request an increase in the limited quantities of compressed gas from 15% to 25% and modify exemption to qualify shipment as a consumer commodity, ORM-D instead of compressed gas, n.o.s.

[5] To authorize use of DOT Specification 103AW tank cars which have been converted to a DOT Specification 103W, for shipment of choromic acid.

[6] To authorize cleaning compounds containing hydrofluoric acid not over 52% strength as an additional commodity.

[7] To authorize flammable liquids with flash points below 20 degrees Fahrenheit and flammable liquids which are also organic peroxides, oxidizers or poison B liquids as additional commodities.

[8] To provide for shipments by common or contract carrier rather than private.

[9] To authorize an additional bag having a capacity of approximately 600 pounds.

[10] To renew exemption issued on an emergency basis authorizing shipment of certain rocket motors with igniter installed.

This notice of receipt of applications for renewal of exemptions and for party to an exemption is published in accordance with Section 107 of the Hazardous Materials Transportation Act (49 U.S.C. 1806; 49 CFR 1.53(e)).

Issued in Washington, DC, on February 1, 1983.

**Joseph T. Horning,**

*Chief, Exemptions and Approvals Division, Office of Hazardous Materials Regulation Materials Transportation Bureau.*

[FR Doc. 83-3681 Filed 2-9-83; 8:45 am]

BILLING CODE 4910-60-M

## Applications for Exemptions

**AGENCY:** Materials Transportation Bureau, DOT.

**ACTION:** List of applicants for exemptions.

**SUMMARY:** In accordance with the procedures governing the application for, and the processing of, exemptions from the Department of Transportation's Hazardous Materials Regulations (49 CFR Part 107, Subpart B), notice is hereby given that the Office of Hazardous Materials Regulation of the Materials Transportation Bureau has received the applications described herein. Each mode of transportation for which a particular exemption is requested is indicated by a number in the "Nature of Application" portion of the table below as follows: 1—Motor vehicle, 2—Rail freight, 3—Cargo vessel, 4—Cargo-only aircraft, 5—Passenger-carrying aircraft.

**DATE:** Comment period closes March 15, 1983.

**ADDRESS COMMENTS TO:** Dockets Branch, Information Services Division, Materials Transportation Bureau, U.S. Department of Transportation, Washington, DC 20590.

Comments should refer to the application number and be submitted in triplicate.

**FOR FURTHER INFORMATION CONTACT:** Copies of the applications are available for inspection in the Dockets Branch, Room 8426, Nassif Building, 400 7th Street, S.W., Washington, DC.

## NEW EXEMPTIONS

| Application No. | Applicant | Regulation (s) affected | Nature of exemption thereof |
|---|---|---|---|
| 8970-N | Williams Strategic Metals, Inc., Wheat Ridge, CO. | 49 CFR 173.368 | To authorize bulk shipment of waste arsenical dust, Class B poison, in cylindrical steel containers lined with 22 gauge 304 stainless steel mounted on a pallet. (Mode 2.) |
| 8971-N | NL McCullough NL Industries, Inc., Houston, TX. | 49 CFR 173.246, 175.3 | To authorize shipment of bromine trifluoride, classed as an oxidizer in non-DOT Specification steel cylinder of 1.83 pound water capacity. (Modes 1, 2, 3, 4.) |
| 8972-N | Union Carbide Corp. Danbury, CT | 49 CFR 173.247 | To authorize shipment of thionyl chloride, corrosive material in DOT Specification 3E1800 cylinders. (Modes 1,) |
| 8973-N | Natico, Inc., Chicago, IL | 49 CFR 173.119, 173.245, 173.346, 178.116 | To manufacture, mark and sell non-DOT Specification 55-gallon steel drums similar to DOT Specification 17E except for 20 gauge top heads and 19 gauge bottom heads to be secured with 7 ply chime for shipment of various flammable, corrosive and poison B liquids and other commdities authorized in 17E. (Mode 1.) |
| 8974-N | Fabricated Metals, Inc., San Leandre, CA | 49 CFR 178.251-2(a)(1) | To manufacture, mark and sell a limited number of aluminum portable tanks identical to DOT Specification 56 except that one component part does not comply with required tensile strength, for shipment of a flammable solid and certain oxidizer. (Modes 1, 2.) |
| 8975-N | Baker Broethers Welding, Inc., Norman, OK | 49 CFR 173.119, 173.245 | To manufacture, mark and sell non-DOT specification portable tanks having 6-60 gallon compartments firmly mounted on a truck chassis, for shipment of various flammable and corrosive liquids (oil well treating compounds). (Mode 1.) |
| 8976-N | Diamond Shamrock, Irving, TX | 49 CFR 173.204(a)(4), 173.28(m) | To authorize a one time reuse of 30 gallon polyethylene lined 17H steel drums which deviate from retest requirements, for shipment of sodium hydrosulfite, classed as a flammable solid. (Modes 1, 2, 3.) |
| 8977-N | Bignier, Schmid-Laurent, Inc., S.A., Ivry-sur-Seine, France. | 49 CFR 173.315, 178.245 | To authorize shipment of various nonflammable gases in non-DOT Specification IMO Type V portable tanks. (Modes 1, 2, 3.) |
| 8978-N | A/S Hellesens Soborg, Denmark | 49 CFR 172.101, 173.206, 173.247, 175.3 | To authorize shipment of lithium battery devices containing up to 50 grams of lithium per cell in specially designed packaging. (Modes 1, 2, 3, 4.) |
| 8979-N | Freeman Industries, Inc., Tuckahoe, NY | 49 CFR 173.270(a)(2) | To authorize shipment of phosphorous tribromide, corrosive material in non-DOT specification lead-lined steel drums overpacked with polyethylene bags which are overpacked in removable-head steel drums. (Mode 1.) |
| 8980-N | U.S. Chemical & Plastics, Canton, OH | 49 CFR 173.118(b) | To authorize shipment of resin solutions classed as flammable liquids with a flash point of 89 degrees Fahrenheit to 95 degrees Fahrenheit in containers exceeding one gallon capacity without labeling and placarding. (Mode 1.) |
| 8981-N | Rusk Aviation, Inc., Kankakee, IL | 49 CFR 172.101, 172.204, 173.27, 175.20(b), 175.30(a)(1), Part 107, Appendix B. | To authorize carriage of Class A, B and C explosives not permitted for air shipment or in quantities greater than those prescribed for air shipment. (Mode 4.) |
| 8982-N | Olin Corp. Stamford, CT | 49 CFR 173.217 | To authorize shipment of calcium hypochlorite, hydrated, classed as an oxidizer in DOT Specification 56 steel portable tanks. (Modes 1, 2.) |
| 8983-N | Universal Propusion Co., Inc. Phoenix, AZ | 49 CFR 173.238 | To classify and authorize shipment of an aircraft rocket engine (commercial) flammable solid, in a fiberboard box with an electric ininitiaton (igniter, Class C) contained in a separate fiberboard box overpacked together in a fiberboard box. (Mode 1.) |
| 8984-N | Wyman Pilot Service, Inc., Warren, MI | 49 CFR 172.101, 172.204(c)(3), 173.27, 175.30(a)(1), 175.320(b), Part 107, Appendix B. | To authorize carriage of various Class A, B and C explosives not permitted for air shipment or in quantities greater than those prescribed for air shipment. (Mode 4.) |
| 8985-N | Clover Aero, Inc., Friendswood, TX | 49 CFR 172.101, 172.204(c)(3), 173.27, 175.30(a)(1), 175.320(b), Part 107, Appendix B. | To authorize carriage of various Class A, B and C explosives not permitted for air shipment or in quantities greater than those prescribed for air shipment. (Mode 4.) |
| 8986-N | Cook Slurry Co. Salt Lake City, UT | 49 CFR 173.114a(b)(3) | To authorize shipment of CO-GEL surry, blasting agent in up to 5,500 gallon capacity non-DOT specification stainless steel cargo tanks. (Mode 1.) |
| 8987-N | Hedwin Corp. Baltimore, MD | 49 CFR 178.35a | To manufacture, mark and sell DOT Specification 2SL inside polyethylene containers of Type III polyethylene, for shipment of those chemicals presently allowed in Type III 2SL containers. (Modes 1, 2, 3.) |
| 8988-N | Schlumberger Well Services, Houston, TX | 49 CFR 172.101, 173.110 | To authorize shipment of charged oil well jet perforating guns, Class C explosive, transported by private motor vehicles in which the total weight of explosive does not exceed 200 pounds per vehicle. (Mode 1.) |
| 8989-N | C-I-L Inc., North York, Ont., Canada | 49 CFR 172.101, 173.77(b), 173.77(d) | To authorize shipment of an initiating explosive (pentaerythrite tetranitrate) Class A explosive, in fiberboard boxes wet with not less than 25 percent by weight of water with boxes marked "P.E.T.N." (Mode 1.) |
| 8990-N | Pressure Pak, Inc., East Hampton, CT | 49 CFR 178.65-5(a)(4) 175.3 | To manufacture, mark and sell steel cylinders whichare comparable to DOT Specification 39 except they are lengitudinal or helical welded with a service pnessure exceeding 500 psig, for shipment of those commodities presently authorized in DOT Specification 39 cylinders. (Modes 1, 2, 3, 4, 5.) |
| 8991-N | Lea Ronal, Inc. Freeport, NY | 49 CFR 172.25(a), 172.400, 172.402(a)(2), 172.402(a)(3), 172.504(a), 173.126, 173.138, 173.237, 173.246, 175.3. | To authoirize shipment of small quantities of Class B poisonous liquids and solids, flammable liquids and solids, corrosive materials and oxidizers, without labeling and flammable solids without placarding. (Modes 1, 2, 4.) |
| 8992-N | General Dynamics, Pomona, CA | 49 CFR 172.101, 172.204(c)(3), 173.27, 175.20(b), 175.30(a)(1), Part 107, Appendix B, n. | To authorize shipment of various Class A and B explosives not permitted for air shipment or in quantities greater than those prescribed air shipment. (Mode 4.) |
| 8993-N | John Brown Engineens & Constructors Limited, Hampshire, England. | 49 CFR 173.134(a)(5) | To authorize shipment of a pyroforic liquid, n.o.s., in non-DOT specification IMO Type V portable tanks. (Modes 1, 2, 3) |
| 8994-N | EDI Corp. Anniston, AL | 49 CFR 173.304, 178.42-2 | To authorize shipment of carbon dioxide, liquefied, classed as a nonflammable gas, in foreign made cylinders similar to DOT Specification 3E except they have a 2.36 inch diameter. (Mode 1.) |

This notice of receipt of applications for new exemptions is published in accordance with Section 107 of the Hazardous Materials Transportation Act (49 U.S.C. 1806; 49 CFR 1.53(e)).

Issued in Washington, DC, on February 2, 1983.

**Joseph T. Horning,**

*Chief, Exemptions and Approvals Division, Office of Hazardous Materials Regulation, Materials Transportation Bureau.*

[FR Doc. 83-3682 Filed 2-9-83; 8:45 am]

BILLING CODE 4910-60-M

## DEPARTMENT OF THE TREASURY

### Customs Service

[T.D. 83-37]

### Customs Approved Public Gauger

Approval of public gauger performing gauging under standards and procedures required by Customs.

Notice is hereby given pursuant to the provisions of § 151.43 of the Customs Regulations (19 CFR 151.43) that the application of Chem Coast, Inc., 1609 First Street, Galena Park, Texas 77547, to gauge imported petroleum and petroleum products in all Customs districts in accordance with the provisions of section 151.43, Subpart C, of the Customs Regulations is approved.

Dated: February 7, 1983.

A. Piazza,

*Acting Director, Entry Procedures and Penalties Division.*

[FR Doc. 83-3659 Filed 2-9-83; 8:45 am]

BILLING CODE 4820-02-M

### Office of the Secretary

### Open Conference on Paperwork Burden Reduction

Notice is given that the Assistant Secretary (Administration) of the Department of the Treasury intends to hold an open conference on paperwork burden reduction on Thursday, March 17, 1983, at 10:00 AM in the Cash Room of the U.S. Treasury Department located at 15th St. and Pennsylvania Ave., NW., Washington, D.C.

The Assistant Secretary (Administration) has been designated by the Secretary of the Treasury to carry out departmental responsibilities under the Paperwork Reduction Act of 1980. The purpose of the conference is to solicit paperwork reduction ideas and suggestions from business, trade, professional and consumer groups, as well as from individuals.

The public is invited to attend the conference. However, so that proper arrangements can be made, requests to speak and written proposals should be submitted by March 9, 1983, to U.S. Treasury Department, Office of Management and Organization, 15th St. and Pennsylvania Ave., NW., Washington, D.C. 20220, Attention: Paperwork Reduction Conference. Persons who wish to speak should submit outlines of their remarks. Additional information may be obtained by writing to the above address or by calling (202) 634-2179.

Cora P. Beebe,

*Assistant Secretary (Administration).*

[FR Doc. 83-3693 Filed 2-9-83; 8:45 am]

BILLING CODE 4810-25-M

### Public Information Collection Requirements Submitted to OMB for Review

During the period January 28 through February 3, 1983 the Department of Treasury submitted the following public information collection requirement(s) to OMB (listed by submitting bureaus), for review and clearance under the Paperwork Reduction Act of 1980, P. L. 96-511. Copies of these submissions may be obtained from the Treasury Department Clearance Officer, by calling (202) 634-2179. Comments regarding these information collections should be addressed to the OMB reviewer listed at the end of each bureau's listing and to the Treasury Department Clearance Officer, Room 309, 1625 "I" Street, NW., Washington, D.C. 20220.

**Internal Revenue Service**

*OMB Number:* N/A (Reinstatement)
*Form Number:* 1099R
*Title:* Statement for Recipients of Total Distributions from Profit-Sharing, Retirement Plans and Individual Retirement Arrangements
*OMB Number:* 1545-0146
*Form Number:* 2553
*Title:* Election by a Small Business Corporation
*OMB Reviewer:* Norman Frumkin (202) 395-6880, Office of Management and Budget, Room 3208, New Executive Office Building, Washington, D.C. 20503

**Alcohol, Tobacco and Firearms**

*OMB Number:* 1512-0116
*Form Number:* ATF F 2145
*Title:* Notice of Release of Cigars, Cigarettes, Cigarette Papers or Cigarette Tubes
*OMB Number:* 1512-0161
*Form Number:* ATF F 3039 (5100.13)
*Title:* Application for Distilled Spirits Stamps (Puerto Rico)
*OMB Reviewer:* Judy McIntosh (202) 395-6880, Office of Management and Budget, Room 3208, New Executive Office Building, Washington, D.C. 20503

**Bureau of the Public Debt**

*OMB Number:* N/A (new submission)
*Form Number:* PD 2192
*Title:* Advice of Nonreceipt of Interest Checks of United States Savings Bonds
*OMB Reviewer:* Judy McIntosh (202) 395-6880, Office of Management and Budget, Room 3208, New Executive Office Building, Washington, D.C. 20503

February 4, 1983.

Joy Tucker

*Departmental Reports, Management Officer.*

[FR Doc. 83-3691 Filed 2-9-83; 8:45 am]

BILLING CODE 4810-25-M

## VETERANS ADMINISTRATION

### Advisory Committee on Health-Related Effects of Herbicides; Meeting

The Veterans Administration gives notice under the provisions of Pub. L. 92-463 that a meeting of the Advisory Committee on Health-Related Effects of Herbicides will be held in Room 119 of the Veterans Administration Central Office, 810 Vermont Avenue, NW, Washington, DC, on February 24, 1983, at 8:30 a.m. The purpose of the meeting will be to assemble and analyze information concerning toxicological issues which the Veterans Administration needs to formulate appropriate medical policy and procedures in the interest of veterans who may have encountered herbicidal chemicals used during the Vietnam Conflict.

The meeting will be open to the public to the seating capacity of the room. Members of the public may direct questions, in writing only, to the Chairman, Barclay M. Shepard, M.D., and submit prepared statements for review by the Committee. Such members of the public may be asked to clarify submitted material prior to consideration by the Committee.

Transcripts of the proceedings and rosters of the Committee members may be obtained from Mr. Donald Rosenblum, Agent Orange Project Office (10A7), Room, 848, Department of Medicine and Surgery, Veterans Administration Central Office, Washington, DC 20420 (Telephone: (202) 389-5411).

The appearance of this notice at least 15 days in advance of the meeting has been hindered due to delays in administrative processing.

Dated: February 1, 1983.

By Direction of the Administrator.

**Rosa Maria Fontanez,**

*Committee Management Officer.*

[FR Doc. 83-3599 Filed 2-9-83; 8:45 am]

BILLING CODE 8320-01-M

## Agency Forms Under OMB Review

**AGENCY:** Veterans Administration.

**ACTION:** Notice.

**SUMMARY:** The Veterans Administration has submitted to OMB for review the following proposals for the collection of information under the provisions of the Paperwork Reduction Act (44 U.S.C. Chapter 35). This document lists new, revised, and extended forms. Each entry contains the following information: (1) The department or staff office issuing the form; (2) The title of the form; (3) The agency form number, if applicable; (4) How often the form must be filled out; (5) Who will be required or asked to report; (6) An estimate of the number of responses; (7) An estimate of the total number of hours needed to fill out the form; and (8) An indication of whether section 3504(H) of Pub. L. 96-511 applies.

**ADDRESSES:** Copies of the proposed forms and supporting documents may be obtained from Patricia Viers, Agency Clearance Officer (004A2), Veterans Administration, 810 Vermont Ave, NW, Washington, DC, 20420 (202) 389-2146. Comments and questions about the items on this list should be directed to the VA's OMB Desk Officer, Andy Usher, Office of Management and Budget, 726 Jackson Place, NW, Washington, DC 20503, (202) 395-7316.

**DATES:** Comments on the forms should be directed to the OMB Desk Officer within 60 days of this notice.

Dated: February 3, 1983.

By Direction of the Administrator.

**Dominick Onorato,**

*Associate Deputy Administrator for Information Resources Management.*

*Revisions*

1. Department of Veterans Benefits
2. Request for Supplies
3. 28-1905m
4. On occasion
5. Training or other rehabilitation service providers
6. 1,000 responses
7. 1,000 hours
8. Not applicable under 3504 (H)

1. Department of Veterans Benefits
2. Veterans Application for Work-Study Allowance
3. 20-8691
4. On Occasion
5. Veteran students
6. 50,000 responses
7. 12,500 hours
8. Not applicable under 3504 (H)

*Extensions*

1. Department of Veterans Benefits
2. Request for Confidential Verification of Birth
3. 21-4504
4. On occasion
5. Registrar of Vital Statistics
6. 9,000 responses
7. 1,500 hours
8. Not applicable under 3504 (H)

1. Depatment of Veterans Benefits
2. Application for Dependency and Indemnity Compensation by Parent(s)
3. 21-535
4. On Occasion
5. Deceased veterans' dependent parent(s)
6. 21,850 responses
7. 27,312 hours
8. Not applicable under 3504 (H)

1. Department of Veterans Benefits
2. Income Statement for Parent Claiming Dependency and Indemnity Compensation
3. 21-4179c
4. On occasion
5. Veterans' parent(s) claiming dependency and indemnity compensation
6. 10,500 responses
7. 5,250 hours
8. Not applicable under 3504 (H)

*New*

1. Department of Veterans Benefits
2. Notice for Election to Convey and/or Invoice for Transfer of Property
3. 26-8903
4. On occasion
5. Mortgage lenders/holders
6. 15,000 responses
7. 2,500 hours
8. Not applicable under 3504 (H)

[FR Doc. 83-3598 Filed 2-9-83; 8:45 am]

BILLING CODE 8320-01-M

# Sunshine Act Meetings

Federal Register
Vol. 48, No. 29
Thursday, February 10, 1983

This section of the FEDERAL REGISTER contains notices of meetings published under the "Government in the Sunshine Act" (Pub. L. 94-409) 5 U.S.C. 552b(e)(3).

## CONTENTS

| | Items |
|---|---|
| Civil Aeronautics Board | 1 |
| Federal Election Commission | 2 |
| Federal Maritime Commission | 3 |
| Postal Service | 4 |
| Synthetic Fuels Corporation | 5 |
| Tennessee Valley Authority | 6 |

1

**CIVIL AERONAUTICS BOARD**

**[M-373, Amdt 2; February 7, 1983]**

Addition to the February 8, 1983 Meeting

**TIME AND DATE:** 10 a.m. (open), 3 p.m. (closed), February 8, 1983.

**PLACE:** Room 1027 (open), room 1012 (closed), 1825 Connecticut Avenue, NW., Washington, D.C. 20428.

**SUBJECT:**

20a. Docket 40887, *U.S.-People's Republic of China Service proceeding. (Phase II).* (OGC)

**STATUS:** Open.

**PERSON TO CONTACT:** Phyllis T. Kaylor, the Secretary. (202) 673-5068.

[S-198-83 Filed 2-8-83; 3:59 pm]

BILLING CODE 6320-01-M

2

**FEDERAL ELECTION COMMISSION**

**DATE AND TIME:** Thursday, February 10, 1983 (following the conclusion of the Open Meeting previously set for this date and set to convene at 10 a.m.)

**STATUS:** This meeting will be closed to the public.

**MATTER TO BE CONSIDERED:** Certification.

**PERSON TO CONTACT FOR INFORMATION:** Mr. Fred Eiland, Information Officer; telephone 202-523-4065.

**Marjorie W. Emmons,**

*Secretary of the Commission.*

[S-196-83 Filed 2-8-83; 3:46 pm]

BILLING CODE 6715-01-M

3

**FEDERAL MARITIME COMMISSION**

**TIME AND DATE:** 9 a.m., February 16, 1983.

**PLACE:** Hearing Room One, 1100 L Street, NW., Washington, D.C. 20573.

**STATUS:** Open.

**MATTERS TO BE CONSIDERED:**

1. Agreement No. 134-43: Modification of the Gulf/Mediterranean Ports Conference Agreement to add foreign inland authority and remove jurisdiction over bulk cargoes.
2. Agreement No. 10305-1: Modification of the Far East Trades Self-Policing Discussion Agreement to enlarge the areas of discussion to include self-policing and neutral body contracts.
3. Pending Agreement No. 10066-3: Extension of the U.S. East and West Coast/Columbia Equal Access Agreement.

**CONTACT PERSON FOR MORE INFORMATION:** Francis C. Hurney, Secretary (202) 523-5725.

[S-195-83 Filed 2-8-83; 2:43 pm]

BILLING CODE 6730-01-M

4

**POSTAL SERVICE**

The Board of Governors of the United States Postal Service, pursuant to its Bylaws (39 CFR 7.5) and the Government in the Sunshine Act (5 U.S.C. 552b), hereby gives notice that it intends to hold a meeting at 2 p.m. on February 16, 1983, in the Benjamin Franklin Room, 11th floor, Postal Service Headquarters, 475 L'Enfant Plaza, S.W., Washington, D.C. Requests for information about the meeting should be addressed to the Secretary of the Board, Louis A. Cox, at (202) 245-4632.

The only agenda item for the meeting is to continue the discussion of the recommended decision of the Postal Rate Commission on third-class bulk rates in Docket No. R80-1, dated December 23, 1982. The meeting will be closed to public observation, the Board having duly determined to close its discussion in accordance with the provisions of the Sunshine Act.

**Louis A. Cox,**

*Secretary.*

[S-194-83 Filed 2-8-83; 2:28 pm]

BILLING CODE 7710-12-M

5

**SYNTHETIC FUELS CORPORATION**

Meeting

**DATE AND TIME:** February 17, 1983 at 10 a.m. (e.s.t.).

**PLACE:** Room 403, 2121 K Street, NW., Washington, D.C. 20586.

**MATTERS TO BE CONSIDERED:** Interested members of the public are advised that a meeting of the Board of Directors of the United States Synthetic Fuels Corporation will be held on the date and at the time and place specified below by telephone conference call. This public announcement is made pursuant to the open meeting requirements of Section 116(f)(1) of the Energy Security Act (9 Stat. 611, 637; 42 U.S.C. 8701, 8712(f)(1) and section 4 of the Corporation's Statement of Policy on public access to Board Meetings. During the meeting, the Board of Directors will consider a resolution to close a portion of the meeting pursuant to Article II, Section 4 of the Corporation's By-laws, section 116(f) of the said Act and sections 4 and 5 of said policy.

**Meeting Agenda**

Remarks by Chairman
Approval of Minutes
Report of President
Operations Report of Executive Vice President

Closed Session:

Status of Negotiations Under Second Solicitation
Maturity Review of Third Solicitation Projects
Consideration of Targeted Coal Solicitation

In addition, the Board of Directors will consider such other matters as may be properly brought before the meeting.

**PERSON TO CONTACT FOR MORE INFORMATION:** If you have any questions regarding this meeting, please contact Mr. Owen J. Malone, Office of General Counsel (202) 822-6336.

United States Synthetic Fuels Corporation.

**Jimmie R. Bowden,**

*Executive Vice President.*

February 8, 1983.

[S-193-83 Filed 2-8-83; 2:01 pm]

BILLING CODE 0000-00-M

6

**TENNESSEE VALLEY AUTHORITY**

**[Meeting No. 1306]**

**TIME AND DATE:** 10:15 a.m. (e.s.t.), Tuesday, February 15, 1983.

**PLACE:** TVA West Tower Auditorium, 400 West Summit Hill Drive, Knoxville, Tennessee.

**STATUS:** Open.

**DISCUSSION ITEM:**

1. Preliminary Rate Review.

**CONTACT PERSON FOR MORE INFORMATION:** Craven H. Crowell, Jr., Director of Information, or a member of his staff can respond to requests for information about this meeting. Call (615) 632–3257, Knoxville, Tennessee. Information is also available at TVA's Washington Office (202) 245–0101.

Dated: February 8, 1983.

[S–197–83 Filed 2–8–83; 3:47 pm]

BILLING CODE 8120–01–M

federal register

Thursday
February 10, 1983

Part II

# Environmental Protection Agency

## Guidelines Establishing Test Procedures for the Analysis of Nonconventional Pesticide Pollutants in the Pesticide Industry

**ENVIRONMENTAL PROTECTION AGENCY**

**40 CFR Part 455**

**[WH-FRL 2289-5]**

## Guidelines Establishing Test Procedures for the Analysis of Nonconventional Pesticide Pollutants in the Pesticide Industry

**AGENCY:** Environmental Protection Agency (EPA).

**ACTION:** Proposed Regulation.

**SUMMARY:** EPA proposes to establish test procedures for the analysis of 66 of the 137 nonconventional pesticide pollutants for which effluent limitations guidelines and standards were proposed November 30, 1982 in 40 CFR Part 455 (47 FR 53994). The remaining 71 nonconventional pesticide pollutants either have Agency approved methods or do not require methods to analyze the concentrations of these pollutants in wastewaters because EPA has proposed to establish a no discharge of process wastewater standard. The analytical procedures will be used in supporting the effluent guidelines proposed in 40 CFR Part 455 (November 30, 1982, 47 FR 53994) and would also be used for filing applications for the National Pollutant Discharge Elimination System (NPDES) permits, for State certifications, and for compliance monitoring under the Clean Water Act.

**DATES:** Comments on this proposal must be submitted on or before April 11, 1983.

**ADDRESS:** Send comments to: Mr. George M. Jett, Effluent Guidelines Division (WH-552), Environmental Protection Agency, 401 M Street, SW., Washington, D.C. 20460. Attention: EGD Docket Clerk, Pesticide Chemicals Industry (WH-552). The supporting information and all comments on this proposal will be available for inspection and copying at the EPA Public Information Reference Unit, Room 2404 (EPA Library Rear) PM-213. Copies of the test methods document may be obtained from the Distribution Officer at the above address or by calling (202) 382-7115.

**FOR FURTHER INFORMATION CONTACT:** Mr. George M. Jett, at (202) 382-7180.

**SUPPLEMENTARY INFORMATION:** Overview: This preamble describes the legal authority, scope, purpose, and background of this proposal, and the methodology used by the Agency to develop these proposed analytical methods. The Agency solicits comments from the industry and other interested parties on specific areas of interest.

Abbreviations, acronyms, and other terms used in the Supplementary Information section are defined in Appendix A of this notice.

### Organization of This Preamble

I. Legal Authority
II. Background
  A. The Clean Water Act
  B. Prior EPA Regulations, 40 CFR Part 136
  C. Prior Pesticide Regulations
III. Scope of this Rulemaking and Summary of Methodology
IV. Cost and Economic Impacts
  A. Regulatory Flexability Analysis
  B. Executive Order 12291
V. Solicitation of Comments
VI. OMB Review
VII. Appendix
  A. List of Abbreviations etc.
  B. Nonconventional Pesticides For Which Analytical Methods are Proposed
  C. Nonconventional Pesticides Proposed for Regulation Which Have Promulgated Methods Available or are Regulated to Zero Discharge
  D. Summary of Method Operational Configurations

### I. Legal Authority

This regulation is proposed under authority of Sections 304(h) and 501(a) of the Clean Water Act, 33 U.S.C. 1251 et seq. (the Federal Water Pollution Control Act Amendments of 1972, as amended by the Clean Water Act of 1977) (the "Act"). Section 304(h) of the Act requires the Administrator of EPA to "promulgate guidelines establishing test procedures for the analysis of pollutants that shall include the factors which must be provided in any certification pursuant to Section 401 of this Act or permit applications pursuant to Section 402 of this Act." Section 501(a) of the Act authorizes the Administrator to "prescribe such regulations as are necessary to carry out his/her functions under this Act." The Administrator has also made these test methods applicable to monitoring and reporting of issued National Pollution Discharge Elimination System (NPDES) permits (40 CFR 122.60(c) and 122.60(e)) and pretreatment standards (40 CFR 403.7(d)(v)).

### II. Background

*The Clean Water Act*

Under the Clean Water Act, the Agency is required to regulate three broad categories of pollutants. These categories are as follows:

- Toxic pollutants—These are a defined list of 126 pollutants derived from the NRDC Consent Decree in *Natural Resource Defense Council* v. *Train*, 8 ERC 2120 (D.D.C. 1976), modified 12 ERC 1833 (D.D.C. 1979).
- Conventional pollutants—These are biochemical oxygen demand (BOD), total suspended solids (TSS), oil and grease, fecal coliform, and pH.
- Nonconventional pollutants—A nonconventional pollutant is any pollutant not identified as a toxic pollutant (Section 307(a)(1) of the Act) or as a conventional pollutant (Section 304(a)(4) of the Act).

Section 304(h) of the Clean Water Act directs the Agency to approve analytical methods for the analysis of pollutants. These methods are used for compliance monitoring and for filing applications for the NPDES program. Without these methods, there would be no universally applicable procedure for determining the presence and concentration of these pollutants in wastewater. To date, EPA has established analytical methods for some but not all of the toxic and nonconventional pollutants regulated by the proposed pesticide effluent limitations guidelines and standards. Agency approved analytical methods exist for all of the conventional pollutants regulated by the November 30, 1982 proposal (47 FR 53994).

*Analytical Methods 40 CFR Part 136*

On October 16, 1973, EPA promulgated test procedures for the analysis of wastewater pollutants in 40 CFR Part 136 entitled "Guidelines Establishing Test Procedures for the Analysis of Pollutants" (38 FR 28758). These guidelines included methods for both toxic, conventional and nonconventional pollutants, but did not include methods for all the toxic and all the nonconventional pollutants. These guidelines were amended on December 1, 1976 (41 FR 52780) to include test procedures for other well known pollutants and pollutant parameters, including metals and a number of organic compounds.

The amended Test Procedures Guidelines of December 1, 1976 (41 FR 52780) were inadequate to meet the testing requirements for all of the toxic pollutants. Therefore, to fill this gap, the Agency embarked on an intensive program to develop test procedures under Section 304(h) of the Act. On December 3, 1979 the Agency proposed additional methods for toxic pollutants as amendments to 40 CFR Part 136 (44 FR 69464). These methods included test procedures based on gas chromatography (GC), mass spectroscopy (MS), high-pressure liquid chromatography (HPLC) and inductively coupled plasma optical emission spectroscopy (ICP). These guidelines are currently scheduled to be promulgated in early 1983.

*Pesticide Analytical Methods*

On November 30, 1982 the Agency proposed effluent limitations guidelines and standards for 34 specific toxic pollutants and 137 nonconventional pesticide active ingredients pollutants (47 FR 53994). The acquisition, preservation and analysis of water samples for the nonconventional pesticide pollutants followed either: (1) The relevant methods promulgated in 40 CFR Part 136, (2) methods developed by the Environmental Monitoring and Support Laboratory (EMSL) of the EPA, (3) the relevant industry methods or (4) EPA contractor developed methods which are similar to the methods proposed and/or promulgated under Part 136. Industry developed and contractor developed methods were used for most of the data collection during the development of the pesticide regulations proposed in November 1982. The industry methods were supplied to the Agency in response to information requests made during 1982. In situations where there were no approved methods under Section 304(h) of the Act, contractor methods were developed. Contractor methods were also used to verify the presence and quantity of pollutants present in pesticide wastewaters prior to treatment and after the application of various control and treatment technologies employed in the industry. Concurrently EMSL was developing and testing methods for Agency approval pursuant to Section 304(h) of the Act for these and other nonconventional pesticides as well as expanding and improving prior approved methods. All the respective methods are described in detail in the record to the pesticide regulation proposed in November, 1982.

Nonconventional pesticides are manufactured or are used in manufacturing processes at plants with a narrow pesticide product base, and pesticides are produced only at a limited number of locations. Historically methods proposed and/or promulgated pursuant to Section 304(h) of the Act (304(h) methods) have been developed for pollutants which are more universally generated, and therefore, 304(h) methods were not developed for many of these nonconventional pesticides. Because of this characteristic unique to the pesticide industry, the Agency has relied upon data generated with industry and contractor produced analytical methods in arriving at effluent limitation guidelines and standards.

Since, nonconventional pesticide pollutants are among the controlling wastewater parameters for which the treatment systems are designed in the pesticide industry, it is necessary that methods for these compounds be developed. However, numerous nonconventional pollutants are still lacking Agency approved test procedures. Today the Agency is proposing analytical methods for 66 of the 137 nonconventional pollutant pesticides for which Agency approved procedures do not currently exist (Appendix 1). The remaining 71 nonconventional pollutants regulated in the proposed effluent limitations, guidelines and standards for the pesticides industry either have 304(h) approved methods or do not require any method because EPA proposed to establish "no discharge of process wastwater" [1] as the effluent limitations and standards of performance (Appendix 2). The methods for nonconventional pollutants are included in the record to the pesticide regulation proposed in November 1982 (47 FR 53994).

The analysis of water samples for toxic pollutants classified as pesticides and for conventional pollutants is presented in the record to the regulation proposed in November 1982 (47 FR 53994). The industry supplied analytical methods for toxic pollutants, however, are not being proposed today because the Agency has not yet completed its evaluation of the methods for these toxic pollutants and because the Agency believes that the 304(h) methods are adequate for analysis of toxic pollutants. The Agency is currently reviewing the industry and contractor supplied analytical methods in order to determine their similarity to methods proposed and/or promulgated pursuant to 304(h) of the Act.

## III. Scope of This Rulemaking Package

This proposed rulemaking is a compilation of three sets of methods: those developed by industry, those developed by the contractor and those developed/approved by EMSL. The Agency is proposing to publish these methods in a document entitled "Test Methods for Nonconventional Pesticide Chemical Analysis of Industrial and Municipal Wastewaters," (EPA-440/1-83-079c). That document is incorporated by reference into this regulation and is available for inspection and copying at the EPA Public Information Reference Unit, Room 2404 (EPA Library Rear) PM-213, Environmental Protection Agency, 401 M St., S.W., Washington, D.C. 20460. Persons intending to comment on these test methods may obtain a copy of the document from Mr. George M. Jett, Effluent Guidelines Division (WH/552) Environmental Protection Agency, 401 M Street, S.W., Washington, D.C. 20460 or by calling (202) 382-7180. The document will also be for sale from the U.S. Department of Commerce, National Technical Information Service, 5285 Port Royal Road, Springfield, Virginia 22161 in March 1983. The accession number can be obtained from George M. Jett, at the address listed above.

The Agency intends to seek **Federal Register** approval of this incorporation by reference. We intend to incorporate these methods by reference rather than publish their full text in the **Federal Register** and the Code of Federal Regulations because the methods are lengthy and complicated, and because they include many tables, charts and graphs that would be difficult to codify.

The Agency is proposing these test procedures for nonconventional pollutants in 40 CFR Part 455. This is pursuant to § 401.13. Section 401.13 provides that the test procedures for measurement which are prescribed at Part 136 apply to effluent limitations guidelines and standards unless otherwise specifically noted in 40 CFR Parts 402 through 699. However, the Agency reserves the option of final promulgation of these approved methods either in 40 CFR Part 136, Guidelines Establishing Test Procedures for the Analysis of Pollutants, or in 40 CFR Part 455. These methods only apply to the analysis of wastewaters pursuant to the Clean Water Act. They are not applicable to analysis under the Federal Insecticide Fungicide and Rodenticide Act (FIFRA) such as residue analyses.

The document which is incorporated by reference is divided into four sections; (A) industry developed methods; (B) contractor developed methods; (C) EMSL developed/approved methods and (D) requirements for sample collection, preservation, handling, quality control, and safety.

Sections A and B contain the methods from which data were generated and subsequently used by the Agency to prepare most of the nonconventional pesticide effluent limitations guidelines and standards proposed on November 30, 1982 (47 FR 53994). The methods developed by the industry are found in Section A and include the following instrumental techniques: gas chromatography, spectrophotometry, high pressure liquid chromatography, thin layer chromatography, gas chromatography/mass spectrometry and titration and are numbered 101 to 145. Any non-confidential information

[1] No discharge of process wastewater means no flow of process wastewater.

concerning the precision and accuracy of these methods is available for public review in the Administrative Record to those proposed regulations.

The Section B contractor developed methods include gas chromatography, spectrophotometry, high pressure liquid chromatography, and gas chromatography/mass spectrometry and are numbereded 401 to 409. The methods in Section B were developed and used by Agency contractors during the pesticides industry verification program. In the verification program, 16 plants representative of the pesticide industry, were selected and were sampled by Agency contractors. Verification program sampling was conducted in accordance with the Pesticides BAT Review Verification Sampling Protocol. The purpose of the verification program was to verify the presence and quantity of pollutants present in pesticide wastewaters prior to treatment and after the application of various control and treatment technologies employed in the industry. (For more information on the verification program see 47 FR 53997.) Information concerning the precision and accuracy of these methods was furnished by the Agency's contractors and non-confidential portions are also available in the Administrative Record to the regulations proposed in November, 1982.

The methods in Section C were developed/approved and written by the Agency's Environmental Monitoring and Support Laboratory, Cincinnati, Ohio (EMSL). Those methods include gas chromatography, gas chromatography/mass spectrometry, high pressure liquid chromatography, and spectrophotometric and are numbered 604 through 633 and 701. These methods were not used for data generation for the proposed pesticide effluent limitations and standards because they were generated subsequent to the data underlying the regulations proposed in November, 1982. The Agency is evaluating the EMSL methods to determine whether they are equivalent to the methods used to generate the data supporting the proposed effluent limitations and standards. If they are judged equivalent, these methods may be approved by the Agency for compliance monitoring.

In some cases there are methods from three sources (industry, contractor and EMSL) available for one nonconventional pesticide. The Agency is presenting all available methods for each nonconventional pesticide for public comment. The Agency then intends to select the most appropriate method or methods for promulgation. This selection process is based on the results of an evaluation of the proposed or promulgated industry, contractor and EMSL methods available for each pesticide. The evaluation includes a review of all available methods information which pertains to the suitability of methods for both data generation and compliance monitoring. In order to perform this evaluation, the Agency is analyzing the potential of the method to generate reliable data as well as the necessary equipment, the complexity of the methods, the multianalyte capability of each method and the detection limits for each method. The methods discussed in Sections A, B and C of the document entitled "Test Methods for Nonconventional Pesticide Chemical Analysis of Industrial and Municipal Wastewaters" (Test Methods Document) are summarized in Appendix D of this regulation, "Summary of Method Operational Configurations."

The Agency has attempted to obtain all available information on analytical methods from the manufacturers and contractors. A summary of this information obtained is included in Appendix D. Information on the EMSL developed/approved methods is also included in Appendix D. The Agency requests comments on the methods found in Sections A, B, and C of the Test Methods Document and will evaluate this information before promulgation of the analytical methods in final form. During the comment period the Agency will continue to evaluate the methods and relevant supporting data. If after evaluation any methods are deemed unsuitable, the Agency will withdraw these methods from this rulemaking package.

Section D of the Test Methods Document contains quality assurance (QA) requirements for the collection, preservation and handling of samples, and requirements for quality control (QC), and safety. These requirements proposed by the Agency are applicable to all the proposed nonconventional pesticide methods. QA/QC is a program developed to assure the generation of quality data. The QA/QC discussed in Section D has generally not been employed in the industry test methods. The QA/QC used by industry varies from method to method. In order to have a uniformly, acceptable method to assure the quality of the data, the Agency is proposing a uniform standard QA/QC program. It involves a rigorous format that includes a control over performance of the laboratory and method analysis. It also includes calibration of instruments, duplication of sample analyses to determine precision, and spiking with known concentrations of compounds to determine percent recoveries and the suitability of the method for the matrix of concern. The Agency invites comment on the appropriateness of using a uniform QA/QC standard. Details of this program such as laboratory safety procedures involved when using the analytical methods and the collection, preservation and handling of samples are found in Section D. Proposed procedures for collecting grab and composite samples are also discussed in Section D.

## IV. Cost and Economic Impact

These proposed methods are not considered a requirement for monitoring and therefore do not directly impose costs or otherwise impact the industry. The costs and economic impacts of monitoring are usually considered as part of the cost of effluent limitations guidelines and standards. The Agency, however, inadvertently omitted those costs from the costs associated with the pesticide effluent limitations guidelines and standards proposed in November, 1982. The Agency estimates that the cost to analyze nonconventional pollutants using available analytical methods including those proposed today would range from $54.00 to $135.00 per method. The average monitoring frequency for the pesticide industry is estimated at once per week. At the average monitoring frequency, the costs for the entire industry to analyze all proposed nonconventional pollutants would range from $140,000 to $351,000 per year in 1979 dollars, or less than 1.0 percent of the total cost of compliance with the effluent limitations guidelines and standards in 40 CFR Part 455.

The Agency also inadvertently omitted the costs associated with analyzing the toxic and conventional pollutants from the costs calculated for the proposed pesticide regulations. The Agency estimates that the costs to analyze toxic and conventional pollutants using the proposed 304(h) methods would range from $110 to $220 per method per year in 1979 dollars. At the estimated average monitoring frequency (once/week), the costs for the entire industry to analyze toxic and conventional pollutants would range from $560,000 to $1,404,000 per year in 1979 dollars.

The annual costs for the industry to analyze conventional, nonconventional, and toxic pollutants would range from approximately 0.7 to 1.75 million dollars per year. These costs will neither noticeably increase the cost of

production nor result in any additional closures. The total annualized cost of the pesticide effluent limitations, guidelines and standards proposed in November, 1982 including these costs is estimated at $38 million.

*Regulatory Flexibility Analysis*

Public Law 96-354 requires that a Regulatory Flexibility Analysis (RFA) be prepared for regulations proposed after January 1, 1981 that have a significant impact on a substantial number of small entities. The analysis may be done in conjunction with or as part of any other analysis conducted by the Agency. The Economic Impact Analysis of the proposed pesticide regulations indicates that there will be no impact on any segment of the regulated manufacturing population, large or small. The addition of these analytical methods does not change this result. Accordingly, there are no significant impacts on small firms, and a formal Regulatory Impact Analysis is not required.

*Executive Order 12291*

Executive Order 12291 requires EPA and other agencies to perform regulatory impact analyses of major regulations. Major rules impose an annual cost to the economy of $100 million or more or meet other economic impact criteria. EPA does not consider the proposed pesticide regulations including these proposed test procedures to be a major regulation because they do not meet any of the criteria specified in paragraph (b) of the Executive Order. Therefore, the proposed regulation does not require a formal regulatory impact analysis. This rulemaking satisfies the requirements of the Executive Order for a non-major rule.

## V. Solicitation of Comments

EPA invites and encourages public participation in this rulemaking. The Agency asks that any comments be specific and supported by relevant data.

EPA is particularly interested in receiving additional comments and information on the test methods for analysis of pesticides under this rule. Methods proposed are generally specific to a particular pesticide and site. The Agency specifically solicits comments on the suitability of the proposed methods. These comments should address subjects such as: (1) Precision, (2) accuracy or recovery, (3) detection limit (4) selectivity or freedom from interferences and (5) ease-of-use. Suggestions must be specific, understandable by an analytical chemist familiar with analysis of pesticides in waters, and supported by data documenting methods performance improvements. The names, addresses, and phone numbers of persons who can be contacted for additional information must be included. Suggestions must reference the applicable section of the pesticide method as listed in this proposal.

## VI. OMB Review

The regulation was submitted to the Office of Management and Budget for review as required by Executive Order 12291. Any comments for OMB to EPA and any EPA response to those comments are available for public inspection at Room M2404, U.S. EPA, 401 M Street, S.W., Washington, D.C. 20460 from 9:00 a.m. to 4:00 p.m. Monday through Friday excluding federal holidays.

### List of Subjects in 40 CFR Part 455

Pesticides and pest chemicals, Waste treatment and disposal, Water pollution control, Analytical methods and test procedures.

Dated: January 31, 1983.

**Anne M. Gorsuch,**

*Administrator.*

## VII. Appendices

### Appendix A: Abbreviations, Acronyms and other Terms Used in this Notice

Act—The Clean Water Act

Agency—The U.S. Environmental Protection Agency

AOP—Ambam oxidation product

BBTAC—1,1'-(2-butenylene) bis(3,5,7-triaza-1-azo (niaadiamantane chloride)

Clean Water Act—(CWA) The Federal Water Pollution Control Act Amendments of 1972 (33 U.S.C. 1251 et seq.) as amended by the Clean Water Act of 1977 (Pub. L. 95-217)

Conventional Pollutants—These are biochemical oxygen demand (BOD), total suspended solids (TSS), oil and grease, fecal coliform, and pH

Design Effluent Levels—Long-term average final effuent levels demonstrated or judged achievable from maximum raw waste load levels through application of the recommended treatment technologies

Direct Discharge—A facility which discharges or may discharge pollutants into waters of the United States excluding oceans

ECD—Electron Capture Detector

Effluent Limitations—Any restrictions established by a state or the Administrator on quantities, rates, and concentrations of chemical, physical, biological, and other constituents which are discharged from point sources into navigable waters, the waters of the contiguous zone, or the ocean, including schedules of compliance

FID—Flame ionization detector

FPD—Flame photometric detector

GC—Gas chromatography

GC/MS—Gas chromatography/mass spectrometry

HPLC—High pressure liquid chromatography

Indirect discharger—A facility which discharges or may discharge pollutants into a publicly owned treatment works

Long-Term Average—The average (mg/l or lbs/1,000 lbs) effluent for a pollutant at a particular point in the wastewater treatment system, based on available data. Treatment varability factors may be multiplied by the long-term average to derive 30-day maximum and daily maximum effluent limitations

Nonconventional Pollutants—For the pesticide industry nonconventional pollutants are defined as nonpriority pollutant pesticides, COD, ammonia, and manganese

Nonconventional Pesticide Pollutants—A nonconventional pollutant is any pollutant not identified as a toxic pollutant (Section 307(a)(1) of the Act) or as a conventional pollutant (Section 304(a)(4) of the Act)

NPDES permit—A National Pollutant discharge Elimination system permit issued under Section 402 of the Act

NSPS—New source performance standards under section 306 of the Act

Pesticide—Any technical grade ingredient used for controlling, preventing, destroying, repelling, or mitigating any pest

Pesticide Active Ingredient—The ingredient of a pesticide which is intended to prevent, destroy, repel, or mitigate any pest. The Active ingredients may make up only a small percentage of the final product which also consists of binders fillers, diluents, etc.

Pesticide Industry—The combined facilities which manufacture as well as formulate and/or package pesticides

POTWs—Publicly owned treatment works

Pretreatment Standards—Any restrictions established by the states or the Administrator on quantities, rates and concentrations of chemical, physical, biological and other constituents which are discharged to POTW's

Priority Pollutants—See Toxic Pollutants

Process Wastewater—Any aqueous discharge which results from or has had contact with the manufacturing process. For purposes of this study

only wastewater from the final synthesis step in the manufacture of pesticide active ingredients is included, in addition to the following: (1) Wastewater from vessel-floor washing in the immediate manufacturing area; (2) stormwater runoff from the immediate manufacturing area; (3) wastewater from air pollution scrubbers utilized in the manufacturing process or in the immediate manufacturing area.

QA—Quality Assurance. In this notice quality assurance pertains to requirements for sample collection, preservation and handling, quality control, and safety.

QC—Quality Control

308 Survey—A questionnaire drafted by EPA, approved by the National Agricultural Chemicals Association and the Office of Management and Budget (OMB #158–R0160), and subsequently distributed to pesticide manufacturers in July 1978. The primary purpose of the survey was to obtain basic data concerning manufacturing, disposal, and treatment, as well as potential sources of toxic, conventional, and nonconventional pollutants

Technical Development Document—The support document, entitled Development Document for the Pesticide Chemicals Manufacturing Category, which provides a technical data base for the proposal of effluent limitations for expanded BPT, BAT, NSPS, and Pretreatment Standards for the pesticide industry.

TLC—Thin Layer chromatography

Toxic Pollutants—These are a defined list of 126 pollutants derived from the NRDC Consent Decree in *Natural Resource Defense Council* v. *Train*, 8 ERC 2120 (D.D.C. 1976), modified 12 ERC 1833 (D.D.C. 1979).

UV—Ultra violet absorbance

Verification Program—A sampling and analysis project conducted by private contractors to the Agency at selected plants in the industry. The purpose of the program was to verify the presence of the toxic, conventional, and nonconventional pollutants identified during the screening program and to determine the levels of these pollutants present in process wastewaters prior to and after application of the various control and treatment technologies employed in the industry.

ZAC—Zinc ammonium carbamate

**Appendix B: Nonconventional Pesticides for Which Analytical Methods Are Proposed**

1. Alachlor
2. AOP
3. Benfluralin
4. Benomyl
5. Bentazon
6. Bolstar
7. Bromacil
8. Busan 40
9. Busan 85
10. Butachlor
11. Carbam-S
12. Carbendazim
13. Carbofuran
14. Carbophenothion
15. Chlorobenzilate
16. Chloropyrifos
17. Chloropyrifos methyl
18. Coumaphos
19. Cyanazine
20. 2, 4-DB
21. 2, 4-DB isobutyl ester
22. 2, 4-DB isobutyl ester
23. DBCP
24. Deet
25. Dhchlofenthion
26. Dichlorvos
27. Dinoseb
28. Dioxathion
29. Ethalfluralin
30. Ethion
31. Etridiazole
32. Fensulfothion
33. Fenthion
34. Ferbam
35. Fluometuron
36. Glyphosate
37. Hexazinone
38. Isopropalin
39. KN Methyl
40. Mancozeb
41. Maneb
42. Mephosfolan
43. Metham
44. Methomyl
45. Metribuzin
46. Mevinphos
47. Nabam
48. Naled
49. Niacide
50. Oxamyl
51. PCP Salt
52. Phorate
53. Profluralin
54. Propachlor
55. Ronnel
56. Simetryne
57. Stirofos
58. Terbacil
59. Terbufos
60. Terbutryn
61. Triadimefon
62. Trichloronate
63. Tricyclazole
64. ZAC
65. Zineb
66. Ziram

**Appendix C: Nonconventional Pesticides Proposed for Regulation Which Have Promulgated Methods Available or are Only Regulated to Zero Discharge**

1. Alkylamine hydorchloride*
2. Ametryne†
3. Aminocarb†
4. Amoban*
5. Atrazine†
6. Azinphos methyl†
7. Barban*
8. BBTAC*
9. Biphenyl*
10. Captan†
11. Carbaryl†
12. Chloropicrin*
13. Chloropropham†
14. 2,4-D†
15. 2,4-D isobutyl ester†
16. 2,4-D isooctyl ester**
17. 2,4-D salt*
18. DCNA†
19. D–D*
20. Demeton†
21. Demeton-O†
22. Demeton-S†
23. Diazinon†
24. Dicamba†
25. Dichlorophen salt*
26. Dicofol†
27. Disulfoton†
28. Diuron†
29. Dowicil 75*
30. Ethoprop*
31. Fenuron†
32. Fenuron-TCA†
33. Fluoroacetamide*
34. Glyodin*
35. HPTMS*
36. Linuron†
37. Malathion†
38. Merphos*
39. Metasol J–26*
40. Methiocarb†
41. Methoxychlor†
42. Mexacarbate†
43. Mirex†
44. Monuron†
45. Monuron-TCA†
46. Neburon†
47. Parathion ethyl†
48. Parathion methyl†
49. PCNB†
50. Perthane†
51. Prometon†
52. Prometryn†
53. Propazine†
54. Propham†
55. Propoxur†
56. Pyrethrin†
57. Siduron†
58. Silvex†
59. Silvex isooctyl ester*
60. Silvex salt*
61. Simazine†
62. Sodium monofluoroacetate*

63. SWEP†
64. 2,4,5–T†
65. Terbuthylazine†
66. Tributyltin benzoate*
67. Tributyltin oxide*
68. Trifluralin†
69. Vancide 51Z*
70. Vancide 51Z dispersion*
71. Vancide TH*

*=Only regulated to zero discharge.
†=Promulgated method available.
**=Promulgated method available and regulated to zero discharge.

BILLING CODE 6560-50-M

APPENDIX D. SUMMARY OF METHOD OPERATIONAL CONFIGURATIONS

| Method | Instrument Technique | Column/Sorbent | Experimental Conditions/Programs | Detection | QA/QC[1] Average % Recovery[2] Relative Std. Deviation[3] |
|---|---|---|---|---|---|
| 101 Alachlor | GC | 10% DCSD 710 on | Carrier flow 80-100 mL/min | FID | not available (Ref. 1) |
| Butachlor | | 80/100 Gas Chrom Q | 60°C to 220°C at 10°/min | | not available |
| Propachlor | | 2' X 1/4" 316 SS | | | ± 10% |
| 102 Alachlor | GC | 10% OV-11 on | He, 25.0 mL/min | NPD or ECD | not available (Ref. 1) |
| Butachlor | | 100/120 Chromosorb W-HP | 200°C - 2 min. | as necessary to deal | 93 - 112% |
| Propachlor | | 6' x 2 mm glass | 6°/min to 250°C hold 10 min | with interferences | 3 - 10% |
| 103 ADP | CS2 evolution | None | acid decomposition | Visible Absorbance | not available (Ref. 1) |
| Zineb | Spectrophoto- | | $N_2$ @ 200 mL/min, digest | (435 nm) | not available |
| Ziram | metric | | for 45 min. Color reagent | | not available |
| ZAC | | | copper acetate monohydrate/ diethanolamine | | |
| 104 Benfluralin | GC | "Aue" Carbowax 20M (special) | 10% methane/90% argon | ECD | control sample (Ref. 1) |
| | | 122 cm x 3 mm ID glass | 50 mL/min, 120°C | | not available |
| | | | | | ± 10% |
| Ethalfluralin | | 10% DC 200/2% QF-1 | 10% methane/90% argon | ECD | |
| | | 122 cm x 3 mm glass | 50 mL/min, 150°C | | |
| Isopropalin | | "Aue" Carbowax 20M (special) | 10% methane/90% argon | ECD | |
| | | 122 cm x 3 mm glass | 50 mL/min, 160°C | | |
| 105 Benomyl | HPLC | Partisil SCX-LC | 60% methanol/40% 0.007N | UV 274 nm | not available (Ref. 1) |
| Carbendazim | | column, PXS-1025 | $NH_4H_2PO_4$ buffer | | 88 |
| | | | isocratic, 3 mL/min | | 2% |
| 106 Benomyl | HPLC | Zipax SCX strong | 0.025N tetramethylammonium | UV 254 | not available (Ref. 1) |
| Carbendazim | | cation exchanger | nitrate-0.025N $HNO_3$ | | 87 |
| | | 1m x 2.1 mm I.D., S.S. | 0.5 mL/min | | not available |
| | | | 60° | | |
| 107 Bentazon | GC | 1) 10% SE-30 on | $N_2$ 80 mL/min, 200°C | FPD | not available (Ref. 1) |
| | | Chromosorb HP or | | | 84-116 |
| | | Gas Chrom Q 80/100 | | | not available |
| | | 4' x 1/4" I.D. | | | |
| | | 2) 3% Carbowax 20M | | | |
| | | on 60/80 Gas Chrom Q | | | |
| | | 4' x 1/4" I.D., glass | | | |
| 108 Bolster | Off-column | 10% DC-200 on | He, 30 mL/min | NPD | not available (Ref. 1) |
| | injection | 80/100 Gas Chrom Q | 230°C | | not available |
| | GC | 18" x 1/8" OD glass | | | not available |
| 109 Oxamyl | HPLC | Zorbax ODS | gradient: water, acetoni- | UV-254 nm | not available (Ref. 1) |
| Methomyl | | reverse phase | trile, step 1: acetonitrile | | 76 - 126 |
| Bromacil | | 25 cm x 4.6 mm I.D. | 0-40% 40 min | | not available |
| Hexazinone | | | step 2: ACN 40%-100% 8 min | | |
| Terbacil | | | step 3: ACN 100%-100% 3 min | | |
| | | | step 4: ACN 100%-0% 5 min | | |
| | | | step 5: ACN 0%-0% 5 min | | |
| | | | flow rate 2.0 mL/min | | |
| 110 Busan 40 | spectrophoto- | None | Direct absorbance | UV absorbance | not available (Ref. 1) |
| Busan 85 | metric | | measured | (284 nm) | not available |
| KN-Methyl | | | | | not available |
| 111 Carbofuran | GC | 5% OV-17 | He, 25-30 mL/min | FID | not available (Ref. 1) |
| | | on Chromosorb W-HP | 175°C | | not available |
| | | 3' x 1/8" OD SS | | | not available |

[1] QA/QC is the first entry opposite each method. The percentage of analytical work load which must be performed is indicated. Sample types which must be included for quality control are also indicated.

[2] Average recovery is given as a range in the first set of numbers.

[3] Relative standard deviation is given as a range in the second set of numbers.

Reference 1 is EPA QC protocol as specified in "Methods for Nonconventional Pesticide Chemical Analysis of Industrial and Municipal Wastewater", January 31, 1983, EPA 440/1-83-079-C.

| Method | Instrument Technique | Column/Sorbent | Experimental Conditions/Programs | Detection | QA/QC[1] Average % Recovery[2] Relative Std. Deviation[3] |
|---|---|---|---|---|---|
| 112 Chlorobenzilate | TLC | Silica Gel G, neutral (50% Merck Silica Gel G, 50% Bio Rad Sil-A) on 200 x 200 mm glass plates coated at a thickness of 200 u. | eluent: n-hexane/ 3-A alcohol (anhydrous) 95%/5% (V,V) | spray with $AgNO_3$, expose to UV light, max 366 nm. Visual spot detection | not available (Ref. 1)<br>not available<br>30% |
| 113 Chlorpyrifos<br>Chlorpyrifos methyl | GC | 11% OV-17 and QF-1 (mixed phase) on 80/100 Gas Chrom Q 72" x 5/32" ID glass | $N_2$, 200 mL/min, 205°C | FPD | spikes & replicates (Ref. 1)<br>85 - 110<br>5% |
| 114 Coumaphos | Off-column injection GC | 10% DC - 200 on 80/100 Gas Chrom Q 18" x 1/8" OD glass | He, 30 mL/min, 230°C | NPD | not available (Ref. 1)<br>not available<br>not available |
| 115 Cyanazine | TLC | Silica Gel G, neutral (50% Merck Silica Gel G 50% Bio Rad Bio Sil-A) on 200 x 200 mm glass plates coated at a thickness of 200 u. | eluent: tetrahydrofuran/ ethyl acetate/n-hexane 4/16/80 (V,V) | spray with 0.02N $AgNO_3$, expose to UV light - 366 nm. Visual spot detection | not available (Ref. 1)<br>not available<br>30% |
| 116 Cyanazine<br>Stirofos | HPLC | Micropak CN 25 cm x 1/8" | 65% chloroform/35% heptane (V,V), 1 mL/min | UV | not available (Ref. 1)<br>not available<br>not available |
| 117 2,4-DB | GC | 3% OV-101 on HMDS Chromasorb W 10' x 1/8" | $N_2$, 60 mL/min, 190°C | FID | not available (Ref. 1)<br>not available<br>not available |
| 118 Deet | GC | 1) 4% SE-30/6% OV-210 on 80/100 silanized support<br>2) 5% or 10% OV-210 on 100/120 silanized support | 1) flow 70-90 mL/min, 200°C<br>2) flow 45-60 mL/min, 180°C | FPD | not available (Ref. 1)<br>not available<br>not available |
| 119 Dichlorvos<br>Naled<br>Mevinphos<br>Stirofos | GC | 1) 3% OV-225 on 100/120 Gas Chrom Q, or<br>2) 3% QF-1 on 80/100 Gas Chrom Q 6' x 1/4" glass | He, 70 mL/min 120° for 3 min, 10° C/min to 230° C, hold 10 min | FPD | spikes & replicates (Ref. 1)<br>40.5 - 93.7<br>3.5% - 5.0% |
| 120 Dichlorvos<br>Naled<br>Mevinphos<br>Stiforos | GC | 3% QF-1 on Chromosorb W, AW-DMCS treated 4' x 1/4" glass | $N_2$, 70 mL/min 140-200°C (after elution of Naled) | FPD with phosphorus filter | not available (Ref. 1)<br>not available<br>not available |
| 121 Dinoseb | GC | 5% DC 200 in chloroform on Chrom Z, 74" x 3 mm ID glass | $N_2$ (prepurified), 85 mL/min | Barber-Colman Sr.[90] ionization detector Model A-4150 | not available (Ref. 1)<br>not available<br>not available |
| 122 Dinoseb | GC | 1.95% OV-17/1.5% QF-1 on 80/100 mesh Gas Chrom Q 6' x 1/4" glass | $N_2$, 90 mL/min, 190°C | FID | spikes (Ref. 1)<br>98<br>not available |
| 123 Ethion | GC | 10% SE-30 or 80/100 mesh Chromasorb W 4' x 1/4" Teflon | 235°C for 7.0 min. to 250°C (max) if GC without control console, isothermal-235°C | FPD in phosphorus mode | blanks & known samples (Ref 1)<br>not available<br>not available |

[1] QA/QC is the first entry opposite each method. The percentage of analytical work load which must be performed is indicated. Sample types which must be included for quality control are also indicated.

[2] Average recovery is given as a range in the first set of numbers.

[3] Relative standard deviation is given as a range in the second set of numbers.

Reference 1 is EPA QC protocol as specified in "Methods for Nonconventional Pesticide Chemical Analysis of Industrial and Municipal Wastewater", January 31, 1983, EPA 440/1-83-079-C.

| Method | Instrument Technique | Column/Sorbent | Experimental Conditions/Programs | Detection | QA/QC[1] Average % Recovery[2] Relative Std. Deviation[3] |
|---|---|---|---|---|---|
| 124 Etridiazole | GC | 15% SP 2100 on 80/100 mesh Supelcoport 6′ x 1/4" OD, 2 mm ID glass | 95% Argon/5% methane 45 mL/min | ECD | not available (Ref. 1)<br>> 90<br>not available |
| 125 Fensulfothion | on-column injection GC | 3% OV-225 on 80/100 mesh Gas Chrom Q 3′ x 1/8" OD glass | He, 20 mL/min 230°C | NPD | not available (Ref. 1)<br>not available<br>not available |
| 126 Fenthion | on-column injection GC | 15% OV-17 on Chromasorb W, DMCS 60/80 mesh 3′ x 1/8" ID glass | He, 20 mL/min 235°C | NPD | not available (Ref. 1)<br>not available<br>not available |
| 127 Glyphosate | HPLC | Dupont Zorbax SAX 15 cm x 4.6 mm | phosphate buffer in methanol, pH 2.3 flow rate 0.6 mL/min | Technicon colorimeter 570 nm | spikes (Ref. 1)<br>70<br>3.4% - 7.9% |
| 128 Mancozeb | GC<br>GC-MS for confirmation | Tenax GC, 60/80 mesh 6′ x 4 mm ID glass | $N_2$, 30 mL/min, 140°C | FPD (sulfur mode) | not available (Ref. 1)<br>71-85<br>not available |
| 129 Maneb | $CS_2$ evolution Spectrophotometric | None | acid hyrolysis, color reagent of copper acetate and amines | Visible Absorbance (435 nm) | not available (Ref. 1)<br>not available<br>not available |
| 130 Mephosfolan<br>Phorate<br>Terbufos | On-column injection GC | 3% OV-25 on 100/120 mesh Gas Chrom Q 122 cm x 1/4 mm ID glass | He, 75 mL/min 130°C - 250°C at 4°C/min | FID | blanks & duplicates (Ref. 1)<br>not available<br>not available |
| 131 Metham | GC | 10% SP-2100 on 100/120 mesh Supelcoport 1.8 cm x 2 mm ID, glass | $N_2$, 30 mL/min, 60°C | FPD (sulfur mode) | not available (Ref. 1)<br>81-88<br>3% |
| 132 Methomyl | HPLC | Partisil - PAC 10 u 250 mm x 3.2 mm | 15% v/v isopropanol/ heptane, 2 mL/min | UV 230 nm | not available (Ref. 1)<br>not available<br>not available |
| 133 Methomyl | GC | not available | not available | FPD (sulfur mode) | not available (Ref. 1)<br>not available<br>not available |
| 134 Mevinphos | GC | 10% EGSS-X on 100/120 mesh Chromasorb W 2′ x 2 mm glass | $N_2$, 50 mL/min | ECD | not available (Ref. 1)<br>> 90<br>not available |
| 135 Profluralin | TLC | Silica Gel G, neutral (50% Merck Silica Gel G, 50% Bio Rad Bio Sil-A) on 200 x 200 mm glass plates coated at a thickness of 200 u. | eluent: benzene/chloroform/ethyl acetate 2/2/1 (V.V.) | air dry, expose to $Cl_2$ gas for 30 sec, after 2 min, spray with starch solution. Visual spot detection | not available (Ref. 1)<br>not available<br>30% |
| 136 Simetryne | TLC | Silica Gel G, neutral (50% Merck Silica Gel G, 50% Bio Rad Bio Sil-A) on 200 x 200 mm glass plates coated at a thick-thickness of 200 u. | eluent: benzene/chloroform/ ethyl acetate 2/2/1 (V.V.) | air dry, expose to $Cl_2$ gas for 30 sec, after 2mm, spray with a starch solution. Visual spot detection | not available (Ref. 1)<br>not available<br>30% |
| 137 Triadimefon | TLC | Silica gel plates, E. Merck F-254 | eluent: toluene/ethyl acetate 9/1 | air dry, spray with 1N methanolic sodium hydroxide; air dry, spray with p-nitro-benzenediazonium fluoborate (NBDF), 0.2% in methanol-water 1:1. Visual spot detection | not available (Ref. 1)<br>not available<br>not available |

[1]QA/QC is the first entry opposite each method. The percentage of analytical work load which must be performed is indicated. Sample types which must be included for quality control are also indicated.

[2]Average recovery is given as a range in the first set of numbers.

[3]Relative standard deviation is given as a range in the second set of numbers.

Reference 1 is EPA QC protocol as specified in "Methods for Nonconventional Pesticide Chemical Analysis of Industrial and Municipal Wastewater", January 31, 1983, EPA 400/1-83-079-C.

| Method | Instrument Technique | Column/Sorbent | Experimental Conditions/Programs | Detection | QA/QC[1] Average % Recovery[2] Relative Std. Deviation[3] |
|---|---|---|---|---|---|
| 138 Trichloromate | off-column injection GC | 3% OV-225 on 80/100 mesh Gas Chrom Q 3' x 1/8" OD, glass | He, 20 mL/min 130°C to 240°C at 15°C/min, hold 15 min. | NPD | not available (Ref. 1) not available not available |
| 139 Tricyclazole | HPLC | u Bondapak $C_{18}$ (10 um) 3.9 mm ID x 30 cm, or Lichrosorb RP-18 (10 um) 4.6 mm ID x 25 cm | methanol/water (50:50, v/v) 0.8 - 1.5 mL/min | UV 254 nm | not available (Ref. 1) 94-101 2.5% - 31.4% |
| 140 Glyphosate | HPLC | Dupont Zorbax SAX 15 cm x 4.6 mm | phosphate buffer in methanol, pH 23 flow rate 0.6 mL/min | Technicon colorimeter 570 nm | spikes (Ref. 1) 80 - 95 7.8% |
| 141 Bromacil Hexazinone Terbacil | GC/MS | 3% OV-101 on 80/100 mesh Chromasorb W 6' x 1/4" OD glass | He, 25 mL/min 230°C (bromacil) 275°C (hexazinone) 220°C (terbacil) | MS | not available (Ref. 1) 82 - 91 3.1% - 6.2% |
| 142 Ziram | $CS_2$ evolution titration | scrubbed gas collected in methanolic KOH | evolved $CS_2$ passed through lead acetate solution, and collected in KOH | titration with standardized iodine solution | not available (Ref. 1) not available not available |
| 143 Propachlor | GC | Permabond DEGS on Chromasorb WAW 1.8 m x 2 mm ID glass | $N_2$, 40 mL/min, 150°C isothermal | FID | blanks & replicates (Ref. 1) > 90 not available |
| 144 Fluometuron | TLC | Silica Gel G (Analtech), 250 u layer, 20 cm x 20 cm | toluene/acetone (85/15, v,v) | air-dry, expose to $Cl_2$ gas for 45 sec., spray with starch/KI solution | not available (Ref. 1) not available 30% |
| 145 Metribuzin | HPLC | u Bondapak $C_{18}$ | gradient: DI water (87% to 0%) acetonitrile (13% to 100%) in 50 min. | UV-313 nm | not available (Ref. 1) not available not available |
| 401 AOP Ferbam Nlacide ZAC Zineb Ziram | $CS_2$ evolution Spectrophotometric | None | Acid decomposition methanolic KOH reaction | Visible absorbance (380 nm) | 5% spikes, 10% duplicates (Ref. 1) 74 6.5% |
| 402 Benomyl Carbendazim | Direct Injection HPLC | Zorbax ODS, 6-8 u 25 cm x 4.6 mm ID Whatman Co: Pell ODS precolumn 5 cm x 2.1 mm ID | 50% $CH_3OH$/50% buffer-10% v.v glacial acetic acid, 0.10 M sodium acetate, 1.0 mL/min | UV-254nm | not available (Ref. 1) 87-103 not available not available |
| 403 Carbofuran | Direct Injection HPLC | Zorbax ODS 25 cm x 4.6 mm ID Whatman Co: Pell ODS guard column, 5 cm x 2.1 mm ID | 55% $CH_3OH$/44.8% $H_2O$/0.2% acetic acid isocratic, 1.5 mL/min | UV-254nm | spikes & replicates (Ref. 1) 83-99 9.0% |
| 404 Chlorobenzilate Terbutryn Profluralin | GC | 3% STAP on 80/100 mesh Chromasorb WHP 1.8 cm x 2 mm ID glass | $N_2$ 45 mL/min isothermal 190°C or program - 90°C for 5 min, 90°C to 225°C at 10°/min hold at 225°C for 14 min. | ECD or thermionic | spikes & replicates (Ref. 1) 59-200 3% - 21% |

[1] QA/QC is the first entry opposite each method. The percentage of analytical work load which must be performed is indicated. Sample types which must be included for quality control are also indicated.

[2] Average recovery is given as a range in the first set of numbers.

[3] Relative standard deviation is given as a range in the second set of numbers.

Reference 1 is EPA QC protocol as specified in "Methods for Nonconventional Pesticide Chemical Analysis of Industrial and Municipal Wastewater", January 31, 1983, EPA 440/1-83-079-C.

| Method | Instrument Technique | Column/Sorbent | Experimental Conditions/Programs | Detection | QA/QC[1] Average % Recovery[2] Relative Std. Deviation[3] |
|---|---|---|---|---|---|
| 405 2,4-DB | GC | 1) 1.5% OV-17/1.95% | (ECD) 95% Ar/5% $CH_4$, | ECD or FID | 10% dupes, 5% spikes (Ref. 1) |
| 2,4-DB IBE | | OV-210 on 100/120 mesh Chromosorb W-HP | 30 mL/min | | 54-89 |
| 2,4-DB OBE | | 1.8 m x 2.0 mm glass | (FID) $N_2$, 30 mL/min | | not available |
| | | 2) or 3% OV-7 on 100/120 mesh Chromosorb W-HP 1.8 m x 2.0 mm glass | | | |
| 406 Dinoseb | GC | 1% SP-1240 DA on 100/120 mesh Supelcoport 6' x 2 mm ID glass | He, 30 mL/min 190° C | FID | spikes (Ref. 1) 147-150 not available |
| 407 Dinoseb | GC/MS | 1% SP-1240 DA on 100/120 mesh Supelcoport 6' x 2.0 mm ID glass | He, 30 mL/min 80°-185°C at 8°C/min hold at 185°C for 15 min | MS | spikes (Ref. 1) 91 1.5% |
| 408 Methomyl | HPLC | u Bondapak $C_{18}$ | 40% acetonitrile/60% $H_2O$ at 1.0 mL/min | UV-254 nm | spikes (Ref. 1) 41-70 not available |
| 409 Cyanazine | HPLC | Zorbax ODS $C_{18}$ 4.6 mm ID x 25 cm Co: Pell ODS guard column, 5 cm x 2.1 cm | 40% acetonitrile/60% $H_2O$, isocratic | UV-254 nm | spikes (Ref. 1) 96 not available |
| 604 Pentachlorophenol, sodium salt | GC | 1% SP-1240 DA on 80/100 mesh Supelcoport, 1.8 m x 2 mm ID, glass | $N_2$, 30 mL/min, 80°C at injection, 8°C/min to 150°C | FID or ECD for derivatized phenole | 10% spikes + duplicates 79 8.8 |
| | | 5% OV-17 on 80/100 mesh Chromosorb W-AW-DMCS | 5% methane/95% argon, 30 mL/min, 200°C | | |
| 608.1 Chlorobenzilate | GC | 1) 1.5% SP-2250/1.95% SP-2401 on 100/120 mesh Supelcoport 180 cm x 2 mm ID glass | $N_2$, 30 mL/min, 140°C (etridiazole), 150°C (propachlor), 215°C (chlorobenzilate), 100°C (DBCP) | ECD | 10% spikes + duplicates 74 - 144 1.7% - 9.9% |
| Etridiazole | | | | | |
| Propachlor | GC-MS for confirmation | | | | |
| Dibromochloropropane (DBCP) | | | | | |
| | | 2) Ultrabond 20 M 100/120 mesh 180 cm x 2 mm ID, glass | $N_2$, 30 mL/min, 200 °C | | |
| 614 Ethion | GC | 1) 3% OV-1 on 100/120 mesh Gas Chrom Q 180 cm x 4 mm ID, glass | $N_2$, 60 mL/min, 200°C isothermal | FPD | 10% spikes + duplicates 94 - 102 3.2% - 5.2% |
| | GC-MS for confirmation | 2) 1.5% OV-17/1.95% QF-1 on 100/120 mesh Gas Chrom Q 180 cm x 4 mm ID, glass | $N_2$, 70 mL/min 215°C isothermal | | |

[1] QA/QC is the first entry opposite each method. The percentage of analytical work load which must be performed is indicated. Sample types which must be included for quality control are also indicated.

[2] Average recovery is given as a range in the first set of numbers.

[3] Relative standard deviation is given as a range in the second set of numbers.

Reference 1 is EPA QC protocol as specified in "Methods for Nonconventional Pesticide Chemical Analysis of Industrial and Municipal Wastewater", January 31, 1983, EPA 440/1-83-079-C.

| Method | Instrument Technique | Column/Sorbent | Experimental Conditions/Programs | Detection | QA/QC[1] Average % Recovery[2] Relative Std. Deviation[3] |
|---|---|---|---|---|---|
| 615 2,4-DB<br>2,4-DB IBE<br>2,4-DB IOE<br>Dinoseb | GC | 1) 1.5% SP-2250/1.95% SP-2401 on 100/120 mesh Supelcoport 180 cm x 4 mm ID, glass | 95% Ar/5% methane, 70 mL/min, isothermal, 185°C, except 140°C for 6 min, then 10°/min to 200°C for dinoseb | ECD | 10% spikes + duplicates<br>81 - 93<br>3% - 4% |
| | | 2) 5% OV-210 on 100/120 mesh Gas Chrom Q 180 cm x 4 mm ID, glass | 95% Ar/5% methane, 70 mL/min 185°C, isothermal | | |
| | | 3) 0.1% SP-1000 on 80/100 mesh Carbopak C | $N_2$, 25 mL/min 100°C to 150°C at 10°/min | | |
| 617 Carbophenothion | GC | 1.5% SP-2250/1.95% SP-2401 on 100/120 mesh Supelcoport 1.8 m x 4 mm ID, glass | 5% methane/95% argon, 60 mL/min, isothermal at 200°C | ECD | 10% spikes + duplicates<br>not available<br>not available |
| | GC-MS for confirmation | 3% OV-1 on 100/120 mesh Supelcoport, 1.8 m x 4 mm ID, glass | 5% methane/95% argon 60 mL/min, isothermal at 200°C | | |
| 619 Simetryn<br>Terbutryn | GC | 1) 5% Carbowax 20M-TPA on 80/100 mesh Supelcoport 180 cm x 2 mm ID, glass | He, 30 mL/min, 200°C | NPD in nitrogen mode | 10% spikes + duplicates<br>83 - 183<br>10% - 24% |
| | | 2) 1.0% Carbowax 20 M or Gas Chrom Q 180 cm x 4 mm ID, glass | He, 80 mL/min isothermal, 155°C | | |
| 622 Bolstar<br>Chlorpyrifos<br>Chlorpyrifos methyl<br>Coumaphos<br>Dichlorvos<br>Fensulfothion<br>Fenthion<br>Mevinphos<br>Naled<br>Phorate<br>Ronnel<br>Stirofos<br>Trichloronate | GC | 1) 5% SP-2401 or 100/120 mesh Supelcoport 180 cm x 2 mm ID, | 1a) He, 30 mL/min, 150°C for 1 min, 25°/min to 220°C, hold<br>1b) $N_2$, 30 mL/min, 170°C for 2 min, 20°/min to 220°C, hold | NPD or FPD phosphorus mode | spikes & duplicates<br>56.5 - 109.0 |
| | | 2) 3% SP 2401 or 100/120 mesh Supelcoport 180 cm x 2 mm ID, glass | 2) He, 25 mL/min, 170°C for 7 min, 10°C/min to 250°C, hold | | |
| | | 3) 15% SE-54 or 80/100 mesh Gas Chrom Q 50 cm x 1/8" OD, Teflon | 3) $N_2$, 30 mL/min, 100°C and 25°/min to 200°C, hold | | |
| 625 Pentachlorophenol, sodium salt | GC-MS | 1% SP-1240 DA on 100/120 mesh Supelcoport, 1.8 m x 2 mm ID, glass | He, 30 mL/min, 70°C for 2 min, 8°/min to 200°C | MS | spikes + duplicates<br>76<br>20-36% |
| 627 Benfluralin<br>Ethalfluralin<br>Isopropalin<br>Profluralin | GC | 1) 1.5% OV-17/1.95% OV-210 on 100/120 mesh Gas Chrom Q 180 cm x 2 mm ID, glass | 95% Ar/15% methane, 30 mL/min, 190°C, isothermal | ECD | 10% spikes + duplicates<br>73 - 99<br>1.1% - 13.2% |
| | | 2) Ultrabond 20M 100/120 mesh 1.8 cm x 2 mm ID, glass | $N_2$, 30 mL/min, 160°C for 2 min, 10°C/min to 200°C | | |
| 629 Cyanazine | HPLC | Spherisorb ODS (10 um) 25 cm x 2.6 mm ID stainless steel | mobile phase - gradient from 50% solvent B to 100% solvent B in 2 min. Solvent A = 25% methanol in water, B = 50% methanol in water, flowrate 1.0 mL/min | UV - 254 nm | 10% spikes + duplicates<br>78 - 100<br>3.9% - 8.9% |

[1] QA/QC is the first entry opposite each method. The percentage of analytical work load which must be performed is indicated. Sample types which must be included for quality control are also indicated.

[2] Average recovery is given as a range in the first set of numbers.

[3] Relative standard deviation is given as a range in the second set of numbers.

Reference 1 is EPA QC protocol as specified in "Methods for Nonconventional Pesticide Chemical Analysis of Industrial and Municipal Wastewater", January 31, 1983, EPA 440/1-83-079-C.

| Method | Instrument Technique | Column/Sorbent | Experimental Conditions/Programs | Detection | QA/QC[1] Average % Recovery[2] Relative Std. Deviation[3] |
|---|---|---|---|---|---|
| 630 ADP<br>Busan 40<br>Busan 85<br>Carbam-S<br>Ferbam<br>KN Methyl<br>Mancozeb<br>Maneb<br>Metham<br>Nabam<br>Niacide<br>ZAC<br>Zineb<br>Ziram | $CS_2$ evolution Spectrophotometric | None | $CS_2$ is purged from sample Color reagent - cupric acetate monohydrate/ diethanolamine | Absorbance at 380 and 435 nm | 10% spikes + duplicates<br>65.2 - 100<br>2.8 - 15.5% |
| 631 Benomyl<br>Carbendazim | HPLC | u Bondapak $C_{18}$ (10 um) 30 cm x 4 mm ID, stainless steel | mobile phase: methanol/ water (1+1), rate 2.0 mL/min | UV - 254 nm | 10% spikes + duplicates<br>70 - 117<br>5.5 - 18.5% |
| 632 Carbofuran<br>Fluometuron<br>Methomyl<br>Oxamyl | HPLC | u Bondapak $C_{18}$ (10 um) 30 cm x 4 mm ID, stainless steel, guard column: Whatman CO-PELL ODS (30-38 um), 7 cm x 4 mm ID | mobile phase, methomyl-acetonitrile/water, linear gradient 10% to 100% acetonitrile in 30 min at rate 2.0 mL/min, oxamyl-35% methanol in water, flowrate 2.09 mL/min, carbofuran and fluometuron - 50% acetonitrile in water at flowrate 2.0 mL/min | UV - 254 and 280 nm | 10% spikes + duplicates<br>48.2 - 99<br>1.4 - 8.4% |
| 633 Bromacil<br>Deet<br>Hexazinone<br>Metribuzin<br>Terbacil<br>Triadimefon<br>Tricyclazole | GC | 1) 3% SP-2250 DB on 100/120 mesh Supelcoport 180 cm x 2 mm ID Glass<br>2) 3% SP-2401 on 100/120 mesh Supelcoport 180 cm x 2 mm ID, glass | 1a) $N_2$, 30 mL/min, 210°C for 1 min, 10°/min to 250°C, hold<br>1b) isothermal, 240°C<br>2a) $N_2$, 30 mL/min, 106°C at injection, 10°/min to 230°C<br>2b) 130°C for 1 min, 12°/min to 200°C | NPD in nitrogen mode | spikes & duplicates<br>69 - 126<br>0.8 - 18.5% |
| 701 Dichlofenthion<br>Dioxathion<br>Carbophenothion | GC | 5% DC-200 or 5% QF-1 on 60/80 mesh Gas Chrom Q, 180 cm x 2 mm ID, glass | $N_2$, 75 mL/min, 185°C | FPD in phosphorus mode | standards (Ref. 1)<br>not available<br>not available |

[1] QA/QC is the first entry opposite each method. The percentage of analytical work load which must be performed is indicated. Sample types which must be included for quality control are also indicated.

[2] Average recovery is given as a range in the first set of numbers.

[3] Relative standard deviation is given as a range in the second set of numbers.

Reference 1 is EPA QC protocol as specified in "Methods for Nonconventional Pesticide Chemical Analysis of Industrial and Municipal Wastewater", January 31, 1983, EPA 440/1-83-079-C.

BILLING CODE 6560-50-C

For the foregoing reasons EPA proposes to amend 40 CFR Part 455 as follows:

## PART 455—PESTICIDE CHEMICALS

1. The authority citation for Part 455 is revised to read as follows:

Authority: Secs. 301, 304(h) and 501(a), Federal Water Pollution Control Act, as amended (33 U.S.C. 1311, 1314, 1361, 86 Stat. 816 et seq. ("The Act")).

2. EPA proposes to add a new Subpart P to Part 455 to read as follows:

### Subpart P—Test Methods for Nonconventional Pesticides

Sec.
455.170 Applicability
455.171 Identification of Test Procedures

### Subpart P—Test Methods for Nonconventional Pesticides

#### § 455.170 Applicability

The procedures prescribed herein shall supplement the guidelines establishing test procedures for the analysis of pollutants contained in Part 136 of this chapter and, except as provided in part 136, shall be used to perform the measurements indicated whenever the waste constituent specified is required to be measured under the Clean Water Act.

#### § 455.171 Identification of test procedures

The 66 nonconventional pesticide pollutants to which this regulation applies and for which effluent limitation guidelines or standards are now specified are named together with CAS number and analytical method designation in Table I. The chemical names for all nonconventional pollutant pesticides are found in Table II to this regulation. The discharge parameter values for which information must be submitted under the Clean Water Act or regulations issued pursuant thereto must be determined by one of the methods designated in Table 1 as described in "Test Methods for Nonconventional Pesticide Chemicals Analysis of Industrial and Municipal Wastewaters" (EPA-440/1-83-079c) which is incorporated by reference or by alternative methods described or approved in accordance with Part 136. The document which is incorporated by reference is available by writing to George M. Jett, Effluent Guidelines Division (WH-552), Environmental Protection Agency, 401 M Street, S.W., Washington, D.C. 20460 or by telephoning (202) 382-7180 for parties intending to comment on these test methods. The document also will be for sale from the U.S. Department of Commerce, National Technical Information Service, 5285 Port Royal Road, Springfield, Virginia 22161. The accession number can be obtained from George M. Jett at the address listed above. This incorporation by reference is being submitted for approval by the Director of the Federal Register.

TABLE 1.—LIST OF PROPOSED TEST PROCEDURES [1]

| Pesticide | CAS No. | Industry "100-series" | Contractor "400-series" | EMSL "600-series" and "700-series" |
|---|---|---|---|---|
| 1. Alachlor | 15972-60-8 | 101,102 | None | None |
| 2. AOP | (NA) | 103 | 401 | 630 |
| 3. Benfluralin | 1861-40-1 | 104 | None | 627 |
| 4. Benomyl | 17804-35-2 | 105,106 | 402 | 631 |
| 5. Bentazon | 25057-89-0 | 107 | None | None |
| 6. Bolstar | 35400-43-2 | 108 | None | 622 |
| 7. Bromacil | 314-40-9 | 109,141 | None | 633 |
| 8. Busan 40 | 51026-28-9 | 110 | None | 630 |
| 9. Busan 85 | 128-03-0 | 110 | None | 630 |
| 10. Butachlor | 23184-66-9 | 101,102 | None | None |
| 11. Carbam-S | 128-04-1 | None | None | 630 |
| 12. Carbendazim | 10605-21-7 | 105,106 | 402 | 631 |
| 13. Carbofuran | 1563-66-2 | 111 | 403 | 632 |
| 14. Carbophenothion | 786-19-6 | None | None | 617,701 |
| 15. Chlorobenzilate | 510-15-6 | 112 | 404 | 608.1 |
| 16. Chloropyrifos | 2921-88-2 | 113 | None | 622 |
| 17. Chloropyrifos methyl | 5598-13-0 | 113 | None | 622 |
| 18. Coumaphos | 56-72-4 | 114 | None | 622 |
| 19. Cyanazine | 21725-46-2 | 115,116 | 409 | 629 |
| 20. 2,4-DB | 94-82-6 | 117 | 405 | 615 |
| 21. 2,4-DB isobutyl ester | 533-74-4 | None | 405 | 615 |
| 22. 2,4-DB isooctyl ester | 1320-15-6 | None | 405 | 615 |
| 23. DBCP | 96-12-8 | None | None | 608.1 |
| 24. Deet | 134-62-3 | 118 | None | 633 |
| 25. Dichlofenthion | 97-17-6 | None | None | 701 |
| 26. Dichlorvos | 62-73-7 | 119, 120 | None | 622 |
| 27. Dinoseb | 88-85-7 | 121, 122 | 406,407 | 615 |
| 28. Dioxathion | 78-34-2 | None | None | 701 |
| 29. Ethalfluralin | 55283-68-6 | 104 | None | 627 |
| 30. Ethion | 563-12-2 | 123 | None | 614 |
| 31. Etridiazole | 2593-15-9 | 124 | None | 608.1 |
| 32. Fensulfothion | 115-90-2 | 125 | None | 622 |
| 33. Fenthion | 55-38-9 | 126 | None | 622 |
| 34. Ferban | 14484-64-1 | 103 | 401 | 630 |
| 35. Fluometuron | 2164-17-2 | 144 | None | 632 |
| 36. Glyphosate | 1071-83-6 | 127,140 | None | None |
| 37. Hexazinone | 51235-04-2 | 109,141 | None | 633 |
| 38. Isopropalin | 33820-53-0 | 104 | None | 627 |
| 39. KN Methyl | (NA) | 110 | None | 630 |
| 40. Mancozeb | 8018-01-7 | 128 | None | 630 |
| 41. Maneb | 12427-38-2 | 129 | None | 630 |
| 42. Mephosfolan | 950-10-7 | 130 | None | None |
| 43. Metham | 137-42-8 | 131 | None | 630 |
| 44. Methomyl | 16752-77-5 | 109,132,133 | 408 | 632 |
| 45. Metribuzin | 21087-64-9 | 145 | None | 633 |
| 46. Mevinphos | 7786-34-7 | 119,120,134 | None | 622 |
| 47. Nabam | 142-59-6 | None | None | 630 |
| 48. Naled | 300-76-5 | 119,120 | None | 622 |
| 49. Niacide | 15339-36-3 | 103 | 401 | 630 |

TABLE 1.—LIST OF PROPOSED TEST PROCEDURES [1]—Continued

| Pesticide | CAS No. | Industry "100-series" | Contractor "400-series" | EMSL "600-series" and "700-series" |
|---|---|---|---|---|
| 50. Oxamyl | 23135-22-0 | 109 | None | 632 |
| 51. PCP Salt | 131-52-2 | None | None | 604,625 |
| 52. Phorate | 298-02-2 | 130 | None | 622 |
| 53. Profluralin | 26399-36-0 | 135 | 404 | 627 |
| 54. Propachlor | 1918-16-7 | 101,102,143 | None | 608.1 |
| 55. Ronnel | 299-84-3 | None | None | 622 |
| 56. Simetryne | 1014-70-6 | 136 | None | 619 |
| 57. Stirofos | 961-11-5 | 116,119,120 | None | 622 |
| 58. Terbacil | 5902-51-2 | 109,141 | None | 633 |
| 59. Terbufos | 13073-79-9 | 130 | None | None |
| 60. Terbutryn | 886-50-0 | None | 404 | 619 |
| 61. Triadimefon | 43121-43-3 | 137 | None | 633 |
| 62. Trichloronate | 327-98-0 | 138 | None | 622 |
| 63. Tricyclazole | 41814-78-2 | 139 | None | 633 |
| 64. ZAC | (NA) | 103 | 401 | 630 |
| 65. Zineb | 12122-67-7 | 103 | 401 | 630 |
| 66. Ziram | 137-30-4 | 103,142 | 401 | 630 |

NA=Not Available.
[1] Complete test procedures are included in "Test Methods for Nonconventional Pesticide Chemicals Analysis of Municipal and Industrial Wastewaters" (EPA-400/1-83-000).

TABLE 2.—LIST OF COMMON NAMES AND CHEMICAL NAMES OF NONCONVENTIONAL PESTICIDES

| Common name | Chemical name |
|---|---|
| 1. Alachlor (Lasso) | 2-Chloro-2',6'-diethyl-N-(methoxymethyl) acetanilide. |
| 2. Alkylamine hydrochloride | Alkylamine hydrochloride. |
| 3. Ametryne (Evik) | 2-Ethylamino-4-isopropylamino-6-methylthio,1,3,5-triazine. |
| 4. Aminocarb | 4-Dimethylamino-3-methylphenyl-methyl-carbamate. |
| 5. Amobam | Diammonium ethylenebisdithiocarbamate. |
| 6. [AOP] (Ambam oxidation product). | Ethylene bis (dithiocarbamic acid) bimolecular and trimolecular cyclic anhydrosulfides and disulfides. |
| 7. Atrazine (Aatrex) | 2-Chloro-4-ethylamino-6-isopropylamino-1,3,5-triazine. |
| 8. Azinphos methyl (Guthion) | O,O-Diethyl S-[4-oxo-1,2,3-benzotriazin-3(4H)-ylmethyl] phosphorodithioate. |
| 9. Barban (Carbyne) | 4-Chlorobut-2-butynyl-m-chlorocarbanilate. |
| 10. 1,1' - (2 - butenylene)bis (3,5,7-triaza-1-azo (niaadiamantane chloride) [BBTAC]. | 1,1'-(2-Butenylene)bis(3,5,7-triaza-1-azo niaadamantane chloride). |
| 11. Benfluralin (Benefin) | N-Butyl-N-ethyl-2,6-dinitro-4-trifluoro-methylaniline. |
| 12. Benomyl (Benlate) | Methyl 1-(butylcarbamoyl)-2-benzimidazolecarbamate. |
| 13. Bentazon (Basagran) | 3-Isopropyl-1H-2, 1,3-Benzothiadiazion-(4) 3H-one 2, 2-dioxide. |
| 14. Biphenyl (Diphenyl) | Diphenyl. |
| 15. (Bolstar) Sulprofos | O-Ethyl O-[4(methylthio)phenyl]-s-propyl] phosphorodithioate. |
| 16. Bromacil (Hyvar) | 5-Bromo-3-sec-butyl-6-methyl-uracil. |
| 17. (Busan 40) | Potassium N-hydroxymethyl-N-Methyldithio carbamate. |
| 18. (Busan 85) | Potassium dimethyldithio carbamate. |
| 19. Butachlor (Machete) | N-(Butoxymethyl)-2-chloro-2', 6'-diethylacetanilide. |
| 20. Captan (Orthocide 406) | N-[(Trichloromethyl)thio]-4-cyclohexene-1,2-dicarboximide. |
| 21. (Carbam-S) (Sodam) | Sodium dimethyldithiocarbamate. |
| 22. Carbaryl (Sevin) | 1-Naphthyl N-methylcarbamate. |
| 23. Carbendazim | 2-(Methoxycarbonylamino)benzimidazol. |
| 24. Carbofuran (Furadan) | 2,3-Dihydro-2,2—dimethyl-7-benzofuranyl methylcarbamate. |
| 25. Carbophenothion (Trithion). | S-[(p-Chlorophenylthio)-methyl] O,O,-diethyl phosphorodithioate. |
| 26. Chlorobenzilate (Acaraben). | Ethyl 4,4'-dichlorobenzilate. |
| 27. Chloropicrin (Larvacide, Nemax). | Trichloronitromethane. |
| 28. Chloropropham | Isopropyl-3-chlorophenyl carbamate. |
| 29. Chlorpyrifos (Dúrsban) | O,O-Diethyl O-(3,5,6-trichloro-2-pyridyl)phosphorothioate. |
| 30. Chlorpyrifos methyl | O,O-Dimethyl O-(3,5,6-trichloro-2-pyridyl) phosphorothioate. |
| 31. Coumaphos (Co-Ral) | O-(3-Chloro-4-methyl-2-oxo-2H-1-benzopyran-7-yl) O,O-diethyl phosphorothioate. |
| 32. Cyanazine (Bladex) | 2-[(4-Chloro-6-(ethylamino)-S-traizine-2-yl)amino]-2-Methylpropionitrite. |
| 33. 2,4-D | 2,4-Dichlorophenoxyacetic acid. |
| 34. 2,4-D isobutyl ester | 2,4-Dichlorophenoxyacetic acid, technical mixture: Isobutyl ester, 60%, N-butyl ester, 40%. |
| 35. 2,4-D isooctyl ester | 2,4-Dichlorophenoxyacetic acid isooctyl ester, 3,4-Dimethylhexanol, 20%, 3,5-Demethylhexanol, 30%, 4,5-Dimethylhexanol, 30%, 3-Methylheptanol, 15%, 5-Methylheptanol, 5%. |
| 36. 2,4-D salt | 2,4-Dichlorophenoxyacetic acid dimethylamine salt. |
| 37. 2,4-DB | 4-(2,4-Dichlorophenoxy)-butyricacid. |
| 38. 2,4-DB isobutyl ester | 4-(2,4-Dichlorophenoxy)-butyricacid isobutyl ester. |
| 39. 2,4-DB isooctyl ester | 4-(2,4-Dichlorophenoxy)-butyricacid isobutyl ester. |
| 40. DBCP (Dibromochloro-pro- pane, Nemagon). | 1,2, Dibromo-3-chloropropane and related halogenated C3 hydrocarbons. |
| 41. DCNA (Dichloran, Botran) | (2,6 Dichloro-4, nitroaniline). |
| 42. D-D (Dichloropropane-dichloropropene mixture). | (60-66%) 1,3-dichloropropene and (30-35%) 1,2-Dichloropropane and other constituents. |
| 43. Deet | NN-Diethyl-m-toluamide. |
| 44. Demeton (Systox) | Mixture of O,O-diethyl-S(and 0)-[2-(ethylthio)ethyl] phosphorothioats. |

TABLE 2.—LIST OF COMMON NAMES AND CHEMICAL NAMES OF NONCONVENTIONAL PESTICIDES—Continued

| Common name | Chemical name |
|---|---|
| 45. Demeton-O | O,O-Diethyl O-[2-(ethylthio)ethyl] phosphorothioates. |
| 46. Demoton-S | O,O-Diethyl S-[2-(ethylthio)ethyl] phosphorothioate. |
| 47. Diazinon (Spectracide) | O,O-Diethyl O-(2-isopropyl-b-methyl-4-pyrimidinyl) phosphorothioate. |
| 48. Dicamba (Banvel D) | 2-Methoxy-3,b-dichlorozbenzoic acid. |
| 49. Dichlofenthion (Namacide). | O-2,4-Dichlorophenyl O,O-diethyl phosphorothioate. |
| 50. Dichlorophen salt | Sodium salt of 2,2'-mehtylene bis(4-chlorophenol). |
| 51. Dichlorvos (DDVP) | 2,2-Dichlorovinyl dimethyl phosphate. |
| 52. Dicofol | 1,1-Bis(p-chloropheny)-2,2,2-trichloroethanol. |
| 53. Dinoseb (DNBP) | 2-(sec-Butyl)-4,6-dinitrophenol. |
| 54. Dioxathion (Delnav) | S,S'-p-Dioxane-2,3-diyl O,O-diethyl phosphorothioate (cis and trans isomers). |
| 55. Disulfoton (Di-Syston) | O,O-Diethyl S-[2-(ethylthio)-ethyl] phosphorothioate. |
| 56. Diuron (DCMU) | 3-(3,4-Dichlorophenyl)-1-dimethylurea. |
| 57. (Dowicil 75) | 1-(3-Chloralyl)-3,5,7-triaza-1-azonia-ad mentane. |
| 58. Ethalfluralin (Sonalan) | N-Ethyl-N-(2-methyl-2-propenyl)-2,6-dinitro-4-(trifluoromethyl) aniline. |
| 59. Ethion | O,O,O'O-Tetraethyl S,S'-methylene bisphosphorodithioate. |
| 60. Ethoprop (Mocap) | O-Ethyl S,S'dipropyl phosphorothioate. |
| 61. Etridiazole (Terrozole) | 5-Ethoxy-3-trichloromethyl-1,2,4-thiadiazole. |
| 62. Fensulfothion (Danasit) | O,O-Diethyl O-[p(methylsulfinyl) phenyl] phosphorothioate. |
| 63. Fenthion (Baytex) | O,O-Dimethyl O-[4-(methyl-thio)-m-tolyl] phosphorothioate. |
| 64. Fenuron | 1, 1-Dimethyl-3-phenylurea. |
| 65. Fenuron-TCA | 3-Phenyl-1, 1-dimethylurea trichloroacetate. |
| 66. Ferbam (Fermate) | Ferric dimethyldithiocarbamate. |
| 67. Fluometuron (Cotoran) | 1, 1-Dimethyl-3-(3-trifluoromethyl-phenyl)urea. |
| 68. Fluoroacetamide | Fluoroacetamide. |
| 69. Glyodin | 2-Heptadecyl-2-imidazoline acetate. |
| 70. Glyphosate (Roundup) | N-(Phosphonomethyl)glycine. |
| 71. Hexazinone | 3-Cyclohexyl-6-(dimethylamino)-1-methyl-1,3,5-triazine-2,4 (1H,3H)-dione. |
| 72. HPTMS | S-(2-Hydroxy propyl) thiomethane Sulfonate. |
| 73. Isopropalin (Paarlan) | 2,6-Dinitro-N, N-dipropylcumidine. |
| 74. (KN methyl) | Potassium N-methyl dithiocarbamate. |
| 75. Linuron (Afolan, Lorox) | 3-(3,4-Dichlorophenyl)-1-methoxy-1-methylurea. |
| 76. Malathion (Mercaptothion, Cythion). | Diethyl mercaptosuccinate S-ester with O,O-dimethyl phosphorodithioate. |
| 77. Mancozeb (Dithane M-45). | Coordination product of maneb containing 16 to 20% Mn and 2.0 to 2.5% Zn (zinc) (maneb-manganous ethylene-1,2-bis-dithiocarbamate. |
| 78. Maneb (Manzate) | Manganous ethylene-1,2-bis-dithiocarbamate. |
| 79. Mephosfolan (Cytrolane) | P,P-Diethyl cyclic propylene ester of phosphonodithioimido-carbonic acid. |
| 80. (Merphos) (Folex) | Tributyl phosphorotrithioite. |
| 81. (Metasol J-26) | N(1 Nitroethyl benzyl) ethylene diamine 25%. |
| 82. Metham (Vapam, SMDC) | Sodium N-methyldithio carbamate. |
| 83. Methiocarb | 4-Methylthio-3,5-xylyl methyl-carbamate. |
| 84. Methomyl (Lannate) | S-Methyl N-[(methylcarbomoyl)-oxy]thioacetimidate. |
| 85. Methoxychlor (Marlate) | 2,2-Bis(p-methoxyphenyl)-1,1,1-trichloroethane. |
| 86. Metribuzin (Sencor) | 4-Amino-6-tert-butyl-3-(methyl-thio)-1,2,4,triazine-5-one. |
| 87. Mevinphos (Phosdrin) | Methyl 3-hydroxy-alpha-crotonate, dimethyl phosphate. |
| 88. Mexacarbate | 4-(Dimethylamine)-3,5-xylyl methyl carbamate. |
| 89. Mirex | Dodecachloro-octahydro-1,3,4-metheno-2h-cyclobuta[c,d]pentalene. |
| 90. Monuron | 3-(p-chlorophenyl)-1,1-dimethylurea. |
| 91. Monuron-TCA | 3-(p-chlorophenyl)-1,1-dimethylurea trichloroacetate. |
| 92. Nabam (Dithane D-14) | Disodium ethylene bis(dithiocarbamate). |
| 93. Naled (Dibrom) | 1,2-Dibromo-2,2-dichloro-ethyl dimethyl phosphate. |
| 94. Neburon | 1-n-Butyl-3-(3,4-dichlorophenyl)-1-methylurea. |
| 95. (Niacide) | Manganeous dimethyldithio-carbamate. |
| 96. Oxamyl (Vydate) | Methyl n',n'-diomethyl-N-[(methyl-carbomoyl)oxy]-1 thio oxamimidate. |
| 97. Parathion ethyl | O,O-Diethyl-O-p-nitrophenyl phosphorothioate. |
| 98. Parathion methyl | O,O-Dimethyl O-p-nitro-phenyl phosphorothioate. |
| 99. PCNB (Quintozene) | Pentachloronitrobenzene. |
| 100. PCP sale | 2,3,4,5,6-Potassium-pentachlorophenate. |
| 101. Perthane | 1,1-Dichloro-2,2-bis(p-ethylphenyl) ethane. |
| 102. Phorate (Thimet) | O,O-Diethyl S-[(ethylthio)-methyl]phosphorodithioate. |
| 103. Profluraline (Tolban) | N-Cyclopropylmethyl-2,6-dinitro-N-Propyl-4-trifluoromethyl-aniline. |
| 104. Prometon (Pramitol) | 2,4-Bis(isopropylamino)-6-methoxy-s-triazine. |
| 105. Prometryn (Caparol) | 2,4-Bis(isopropylamino)-6-(methylthio)-S-triazine. |
| 106. Propachlor (Ramrod) | 2-Chloro-N-isopropylacentanilide. |
| 107. Propazine (Milogard) | 2-Chloro-4,6-bis(isopropylamino)-s-triazine. |
| 108. Propham | Isopropyl carbanilate. |
| 109. Propoxur | O-Isopropoxyphenyl methylcarbamate. |
| 110. Pyrethrins | Standardized mixture of pyrethrins I and II (mixed esters of pyrethrolone. |
| 111. Ronnel (Fenchlorphos) | O,O-Dimethyl O-(2,4,5-trichlorophenyl) phosphorothioate. |
| 112. Siduron (Tupersan) | 1-(2-Methylcyclohexyl)-3-phenylurea. |
| 113. Silvex (Fenoprop) | 2-(2,4,5-Trichlorophenoxy) propionic acid. |
| 114. Silvex isooctyl ester | Isocctyl ester of 2-(2,4,5-trichlorophenoxy) propionic acid. |
| 115. Silvex salt | Dimethyl amine salt of 2-(2,4,5-trichlorophenoxy) propionic acid. |
| 116. Simazine (Princep) | 2-Chloro-4,5,6-bis(ethyl-amino)-s-triazine. |
| 117. Simetryne (Gybon) | 2-Methylthio-4,6-bis-ethylamino-s-triazine. |
| 118. Sodium monofluoroacetate. | Sodium monofluoroacetate. |
| 119. Stirofos (Tetrachlorvinphos). | 2-Chloro-1-(2,4,5-trichlorophenyl) vinyl dimethyl phosphate. |
| 120. SWEP | Methyl N-(3,4-dichlorophenyl) carbamate. |
| 121. 2,4,5-T | 2,4,5-Trichlorophenoxyacetic acid. |

TABLE 2.—LIST OF COMMON NAMES AND CHEMICAL NAMES OF NONCONVENTIONAL PESTICIDES—Continued

| Common name | Chemical name |
|---|---|
| 122. Terbacil (Sinbar) | 3(tert-Butyl)-5-chlor-6-methyl uracil. |
| 123. Terbufos (Counter) | 5-tert-Butylthiomethyl O,O-dimethyl phosphorodithioate. |
| 124. Terbuthylazine (GS 13529). | 2-tert-Butylamino-4-chloro-6-ethylamino-1,3,5-triazine. |
| 125. Terbutryn (Igran) | 2-(tert-Butylamino)-4-(ethylamino)-6-(methylthio)-s-triazine. |
| 126. Triadimefon (Bayleton) | 1-(4-Chlorophenoxy)-3,3-dimethyl-1-(1,2,4-triazol-1-yl) buton-2-one. |
| 127. Tributyltin benzoate | Tributyltin benzoate. |
| 128. Tributyltin oxide | Bis(tri-n-butyltin) oxide. |
| 129. Trichloronate | O-ethyl O-(2,4,5-trichlorophenyl)ethylphosphorothioate. |
| 130. Tricyclazole | 5-Methyl-1,2,4-triazolo [3A-b] Benzothiazole. |
| 131. Trifluralin (Treflan) | a,a,a-Trifluoro-2,6-dinitro-N,N-Dipropyl-p-toluidine. |
| 132. (Vancide TH) | Hexahydro-1,3,5-triethyl-s-triazine. |
| 133. (Vancide 51Z) | Zinc dimethyldithiocarbamate and Zinc 2-mercaptobenzo-thiazole. |
| 134. (Vancide 51Z dispersion). | 50% Zinc dimethylydithiocarbamate and Zinc 2-mercaptobenzothiazole 50% water. |
| 135. [ZAC] (zinc ammonium carbonate). | Ammoniates of [ethlenebis (dithiocarbamate)]-zinc. |
| 136. Zineb | Zinc ethylenebisdithiocarbamate. |
| 137. Ziram (Vancide MZ-96) | Zinc dimethyldithiocarbamate. |

[FR Doc. 83-3207 Filed 2-9-83; 8:45 am]

BILLING CODE 6560-50-M

federal register

Thursday
February 10, 1983

# Part III

# Environmental Protection Agency

## Effluent Limitations Guidelines, Pretreatment Standards, and New Source Performance Standards for the Canmaking Subcategory; Proposed Regulation

**ENVIRONMENTAL PROTECTION AGENCY**

**40 CFR Part 465**

**[WH-FRL 2288-8]**

## Effluent Limitations Guidelines, Pretreatment Standards, and New Source Performance Standards for the Canmaking Subcategory

**AGENCY:** Environmental Protection Agency (EPA).

**ACTION:** Proposed regulation.

**SUMMARY:** EPA is proposing this regulation to limit effluent discharges to waters of the United States and the introduction of pollutants into publicly owned treatment works from plants engaged in the manufacturing of cans. The purpose of this proposal is to provide effluent limitations guidelines and standards based on "best practicable technology," "best available technology," and "best conventional technology," and to establish new source performance standards and pretreatment standards under the Clean Water Act. After considering comments received in response to this proposal, EPA will promulgate a final rule.

**DATES:** Comments on this proposal must be submitted by April 11, 1983. The Agency is proposing a compliance date for pretreatment standards for existing sources to be three years from the date of promulgation.

**ADDRESSES:** Send comments to: Mary L. Belefski, Effluent Guidelines Division (WH-552), Environmental Protection Agency, 401 M St., S.W., Washington, D.C. 20460, Attention: EGD Docket Clerk, Proposed Coil Coating Subpart D—Canmaking Rules (WH-552). The supporting information and all comments received on this proposal will be available for inspection and copying at the EPA Public Information Reference Unit, Room 2404 (EPA Library Rear) PM-213. The EPA information regulation (40 CFR Part 2) provides that a reasonable fee may be charged for copying. Copies of technical documents may be obtained from the Distribution Officer at the above address. The economic analysis may be obtained from Ms. Josette Bailey, Economic Analysis Staff (WH-586), Environmental Protection Agency, 401 M St. S.W., Washington, D.C. 20460, or call (202) 382-5382.

**FOR FURTHER INFORMATION CONTACT:** Technical information may be obtained from Mr. Ernst P. Hall, at the address listed above, or call (202) 382-7126.

**SUPPLEMENTARY INFORMATION:** The Supplementary Information section describes the legal authority and background, the technical and economic bases, and other aspects of the proposed regulations. That section also solicits comments on specific areas of interest. The abbreviations, acronyms, and other terms used in the Supplementary Information section are defined in Appendix A to this preamble.

This proposed regulation is supported by three major documents available from EPA. Chemical analysis methods are discussed in "Sampling and Analysis Procedures for Screening of Industrial Effluents for Priority Pollutants." EPA's technical conclusions are detailed in the "Development Document for Effluent Limitations Guidelines, New Source Performance Standards and Pretreatment Standards for the Canmaking Subcategory of the Coil Coating Point Source Category" (development document). The Agency's economic analysis is found in "Economic Impact Analysis of Proposed Effluent Standards and Limitations for the Canmaking Subcategory of the Coil Coating Category "(Economic Impact Analysis) EPA 440/2-83/003.

**Organization of This Notice**

I. Legal Authority.
II. Background.
A. The Clean Water Act.
B. Prior EPA Regulations.
C. Overview of the Industry.
III. Scope of this Rulemaking and Summary of Methodology.
IV. Data Gathering Efforts.
V. Sampling and Analytical Program.
VI. Industry Subcategorization.
VII. Available Wastewater Control and Treatment Technology.
A. Status of In-Place Technology.
B. Control Technologies Considered.
VIII. Best Practicable Technology (BPT) Effluent Limitations.
IX. Best Available Technology (BAT) Effluent Limitations.
X. New Source Performance Standards (NSPS).
XI. Pretreatment Standards for Existing Sources (PSES).
XII. Pretreatment Standards for New Sources (PSNS).
XIII. Best Conventional Technology (BCT) Effluent Limitations.
XIV. Pollutants and Subcategory Segments Not Regulated.
XV. Cost and Economic Impact Assessment.
XVI. Non-Water Quality Aspects of Pollution Control.
XVII. Best Management Practices (BMPs)
XVIII. Upset and Bypass Provisions.
XIX. Variances and Modifications.
XX. Relationship to NPDES Permits.
XXI. Summary of Public Participation.
XXII. Solicitation of Comments
XXIII. List of Subjects in 40 CFR Part 465—Subpart D.
XXIV. Appendices:
A—Abbreviations, Acronyms and Other Terms Used in this Notice.
B—Toxic Pollutants Not Detected.
C—Toxic Pollutants Detected Below the Nominal Quantification Limit.
D—Toxic Pollutants Not Treatable Using Technologies Considered Applicable to the Subcategory.
E—Toxic Pollutants Controlled at BPT, BAT, and NSPS But Not Specifically Regulated.
F—Segments Not Regulated.

### I. Legal Authority

The regulation described in this notice is proposed under authority of Sections 301, 304, 306, 307, 308, and 501 of the Clean Water Act (the Federal Water Pollution Control Act Amendments of 1972, 33 USC 1251 *et seq.*, as amended by the Clean Water Act of 1977, Pub. L. 95-217) (the "Act"). This regulation is also proposed in response to the Settlement Agreement in *Natural Resources Defense Council, Inc.* v. *Train*, 8 ERC 2120 (D.D.C. 1976), modified March 9, 1979, 12 ERC 1833 (D.D.C. 1979) and modified by orders dated August 25, 1982 and October 26, 1982.

### II. Background

#### *A. The Clean Water Act*

The Federal Water Pollution Control Act Amendments of 1972 established a comprehensive program to "restore and maintain the chemical, physical, and biological integrity of the Nation's waters" Section 101(a). By July 1, 1977, existing industrial dischargers were required to achieve "effluent limitations requiring the application of the best practicable control technology currently available" (BPT), Section 301(b)(1)(A); and by July 1, 1983, these dischargers were required to achieve "effluent limitations requiring the application of the best available technology economically achievable (BAT) * * * which will result in reasonable further progress toward the national goal of eliminating the discharge of all pollutants," Section 301(b)(2)(A). New industrial direct dischargers were required to comply with Section 306 new source performance standards (NSPS), based on best available demonstrated technology; and new and existing dischargers to publicly owned treatment works (POTW) were subject to pretreatment standards under Sections 307 (b) and (c) of the Act. While the requirements for direct dischargers were to be incorporated into National Pollutant Discharge Elimination Systems (NPDES) permits issued under Section 402 of the Act, pretreatment standards were made enforceable directly against

dischargers to POTW (indirect dischargers).

Although Section 402(a)(1) of the 1972 Act authorized the setting of requirements for direct dischargers on a case-by-case basis, Congress intended that, for the most part, control requirements would be based on regulations promulgated by the EPA Administrator. Section 304(b) of the Act required the Administrator to promulgate regulations providing guidelines for effluent limitations setting forth the degree of effluent reduction attainable through the application of BPT and BAT. Moreover, Sections 304(c) and 306 of the Act required promulgation of standards for new sources, and Sections 304(f), 307(b), and 307(c) required promulgation of pretreatment standards. In addition to these limitations and standards for designated industry categories, Section 307(a) of the Act required the Administrator to promulgate effluent standards applicable to all dischargers of toxic pollutants. Finally, Section 501(a) of the Act authorized the Administrator to prescribe any additional regulations "necessary to carry out his functions" under the Act.

EPA was unable to promulgate many of these regulations by the dates specified in the Act. In 1976, EPA was sued by several environmental groups, and in settlement of this lawsuit EPA and the plaintiffs executed a "Settlement Agreement" which was approved by the Court. This Agreement required EPA to develop a program and adhere to a schedule for promulgating regulations for 21 major industries, including BAT effluent limitations guidelines, pretreatment standards, and new source performance standards for 65 "priority" pollutants and classes of pollutants. See *Natural Resources Defense Council, Inc.* v. *Train*, 8 ERC 2120 (D.D.C. 1976), modified 12 ERC 1833 (D.D.C. 1979), modified by orders dated August 25, 1982 and October 26, 1982.

On December 27, 1977, the President signed into law the Clean Water Act of 1977. Although this law makes several important changes in the Federal water pollution control program, its most significant feature is its incorporation into the Act of several of the basic elements of the Settlement Agreement program for toxic pollution control. Sections 301(b)(2)(A) and 301(b)(2)(C) of the Act now require the achievement by July 1, 1984 of effluent limitations requiring application of BAT for "toxic" pollutants, including the 65 "priority" pollutants and classes of pollutants which Congress declared "toxic" under Section 307(a) of the Act. Likewise, EPA's programs for new source performance standards and pretreatment standards are now aimed principally at toxic pollutant controls. Moreover, to strengthen the toxics control program, Section 304(e) of the Act authorizes the Administrator to prescribe "best management practices" ("BMP") to prevent the release of toxic and hazardous pollutants from plant site runoff, spillage or leaks, sludge or waste disposal, and drainage from raw material storage associated with, or ancillary to, the manufacturing or treatment process.

In keeping with its emphasis on toxic pollutants, the Clean Water Act of 1977 also revises the control program for non-toxic pollutants. Instead of BAT for "conventional" pollutants identified under Section 304(a)(4) (including biochemical oxygen demand, suspended solids, oil and grease and pH), the new Section 301(b)(2)(E) requires achievement by July 1, 1984, of "effluent limitations requiring the application of the best conventional pollutant control technology" (BCT). The factors considered in assessing BCT for an industry include the costs of attaining a reduction in effluents and the effluent reduction benefits derived, compared with the costs and effluent reduction benefits from the discharge from POTW. (Section 304(b)(4)(B)). For non-toxic, nonconventional pollutants, Sections 301 (b)(2)(A) and (b)(2)(F) require achievement of BAT effluent limitations within 3 years after their establishment or July 1, 1984, whichever is later, but not later than July 1, 1987.

The purpose of this proposed regulation is to provide effluent limitations guidelines for BPT, BAT, and BCT, and to establish NSPS, pretreatment standards for existing sources (PSES), and pretreatment standards for new sources (PSNS), under Sections 301, 304, 306, 307, and 501 of the Clean Water Act.

*B. Prior EPA Regulations*

EPA has not previously promulgated limitations and standards for the canmaking subcategory of the coil coating category. The final coil coating regulation, applicable to other subcategories, was promulgated on December 1, 1982 (47 FR 54232).

*C. Overview of the Industry*

The can manufacturing industry is included within the U.S. Department of Commerce Census Standard Industrial Classification (SIC) 3411—Metal Cans and includes over 400 manufacturing plants.

Canmaking covers all of the manufacturing processes and steps involved in the manufacturing of various shaped metal containers which are subsequently used for storing foods, beverages and other products. Two major types of cans are manufactured: seamed cans and seamless cans.

Seamed cans (primarily three-piece cans) are manufactured by forming a flat piece or sheet of metal into a container with a longitudinal or side seam which is clinched, welded, or soldered, and attaching formed ends to one or both ends of the container body. About 300 plants in the United States manufacture seamed cans.

Seamless cans consist of a can body formed from a single piece of metal and usually a top, or two ends, that are formed from sheet metal and attached to the can body. There are several forming methods which may be used to shape the can bodies including simple drawing, drawing and redrawing, drawing and ironing (D&I), extruding, spinning, and others. About 125 plants in the United States manufacture seamless cans.

In the manufacture of seamless cans, oil is used frequently as a lubricant during the forming of the seamless body and must be removed before further processing can be performed. Typically, this is accomplished by washing the can body in a continuous canwasher using water based alkaline cleaners. This step is followed by metal surfacing steps to prepare the can for painting.

In the manufacture of seamed cans, can ends, can tops and seamless cans from coated (e.g., coil coated) stock, no oil is used and the cans do not need to be washed after forming. Because no process wastewater is generated from these canmaking process segments they are excluded from regulation. (See Sections VI and XIV of this preamble.)

Pollutants or pollutant parameters generated in canmaking wastewaters and regulated are: (1) Toxic metals—chromium, and zinc; (2) toxic organics listed as total toxic organics (TTO) (TTO is the sum of all toxic organic compounds detected—See Appendix E of this notice) (3) nonconventional pollutants—aluminum, fluoride, and phosphorous; and (4) conventional pollutants—oil and grease, TSS, and pH. Because of the toxic metals present, the sludges generated during wastewater treatment generally contain toxic metals.

EPA estimates that 88 of the approximately 425 can manufacturing plants in the United States discharge wastewater. Seven of these plants are direct dischargers and 81 are indirect dischargers. These sites are scattered

geographically throughout the United States

### III. Scope of This Rulemaking and Summary of Methodology

This proposed regulation is a part of a new chapter in water pollution control requirements. For most industries, the 1973–1976 round of rulemaking emphasized the achievement of best practicable technology (BPT) by July 1, 1977. In general, that technology level represented the average of the best existing performances of well known technologies for control of familiar (i.e., "classical") pollutants. However, for this category, BPT was not proposed or promulgated; accordingly, EPA is establishing BPT effluent limitations as part of this rulemaking.

In this round of rulemaking EPA is also establishing the best available technology economically achievable (BAT) effluent limitations. These are to result in reasonable further progress toward the national goal of eliminating the discharge of all pollutants and are to be achieved by July 1, 1984. In general, this technology level represents the best economically achievable performance in any industrial category or subcategory. Moreover, as a result of the Clean Water Act of 1977, the emphasis of EPA's program has shifted from "classical" pollutants to the control of a lengthy list of toxic pollutants.

In its 1977 legislation, Congress recognized that it was dealing with areas of scientific uncertainty when it declared the 65 "priority" pollutants and classes of pollutants "toxic" under Section 307(a) of the Act. Many of the "priority" pollutants were relatively unknown outside of the scientific community, and those engaged in wastewater sampling and control have had little experience in dealing with these pollutants. Additionally, these pollutants often appear (and have toxic effects) at concentrations that tax current analytical techniques. Even though Congress was aware of the state-of-the-art difficulties and expense of "toxics" control and detection, it directed EPA to act quickly and decisively to detect, measure and regulate these substances.

In developing this regulation, EPA studied canmaking to determine whether differences in raw materials, final products, manufacturing processes, equipment, age and size of plants, water use, wastewater constituents, or other factors required the development of separate effluent limitations and standards for different segments of the industry. This study included the identification of raw waste and treated effluent characteristics, including the sources and volume of water used, the processes employed, and the sources of pollutants and wastewaters. Sampling and analysis of specific waste streams enabled EPA to determine the presence and concentration of priority pollutants in wastewater discharges.

EPA also identified both actual and potential control and treatment technologies (including both in-process and end-of-process technologies). The Agency analyzed both historical and newly generated data on the performance, operational limitations, and reliability of these technologies. In addition, EPA considered the impacts of these technologies on air quality, solid waste generation, water scarcity, an energy requirements.

The Agency then estimated the costs of each control and treatment technology using a computer program based on standard engineering cost analysis. EPA derived unit process costs by applying canmaking data and characteristics (production and flow for a "normal" line) to each treatment process (i.e., metals precipitation, sedimentation, mixed-media filtration, etc.). The costs also consider what treatment equipment exists at each plant. These unit process costs were added for each plant to yield total cost at each treatment level. The Agency then evaluated the economic impacts of these costs.

On the basis of these factors, EPA identified and classified various control and treatment technologies as BPT, BAT, BCT NSPS, PSES, and PSNS. The proposed regulation, however, does not require the installation of any particular technology. Rather, it requires achievement of effluent limitations equivalent to those achieved by the proper operation of these or equivalent technologies.

Except for pH requirements, the effluent limitations for BPT, BAT, BCT, and NSPS are expressed as mass limitations—a mass of pollutant per unit of production (number of cans). They were calculated by combining three figures: (1) Treated effluent concentrations determined by analyzing control technology performance data; (2) production-weighted wastewater flow for the subcategory; and (3) any relevant process or treatment variability factor (e.g., mean versus maximum day). This basic calculation was performed for each regulated pollutant or pollutant parameter in the subcategory.

Pretreatment standards—PSES and PSNS—are also expressed as mass limitations rather than concentration limits to ensure that the effluent reduction in the total quantity of pollutant discharges resulting from the model treatment technology, which includes flow reduction, is realized.

### IV. Data Gathering Efforts

The technical data gathering program is described briefly in Section III and in substantial detail in Section V of the development document. Data collection for this subcategory focused on wet processes associated with canmaking. Data were originally collected under the aluminum forming point source category in 1978 when data collection portfolios (dcp) were sent to all known aluminum formers under the authority of Section 308 of the Clean Water Act. Information was returned from about 20 companies who primarily manufactured aluminum cans and generated wastewater. Subsequently, in 1982, several of these companies were requested to update their dcp for aluminum canmaking and provide data on steel canmaking. Also, some additional companies (primarily steel can manufacturers and also those not in the 1977 aluminum data base) were requested to complete a dcp on canmaking. Data on the dry manufacturing processes were obtained from several dcp, literature studies, discussions with industry and plant engineering visits.

The technical data based includes information from 21 companies representing about 100 manufacturing sites. In addition to previous studies and the data collection effort for this study, supplemental data were obtained from NPDES permit files and engineering studies on treatment technologies used in this and other cagetories with similar wastewater characteristics. The data gathering effort solicited all known sources of data and all available pertinent data were used in developing this regulation.

### V. Sampling and Analytical Program

As Congress recognized in enacting the Clean Water Act of 1977, the state-of-the-art ability to monitor and detect toxic pollutants is limited. Most of the toxic pollutants were relatively unknown until a few years ago, and only on rare occasions had these pollutants been regulated. Also, industry had not monitored or developed methods to monitor most of these pollutants.

Faced with these problems, EPA developed a sampling and analytical protocol. This protocol is set forth in "Sampling and Analysis Procedures for Screening of Industrial Effluents for Priority Pollutants" revised in April 1977. Methods promulgated under Section 304(h) (40 CFR Part 136) were available and were used to analyze most toxic metals, pesticides, cyanides,

and phenols. Analysis methods for toxic organic pollutants are explained in the preamble to proposed regulation for the Leather Tanning Point Source Category, 40 CFR 425, 44 FR 38749, July 2, 1979.

A total of 7 plants were visited for engineering analysis of which five were sampled. An analysis for the full list of toxic pollutants and other pollutants was carried out at three plants. Selected pollutants were analyzed in samples taken from two additional plants. Full details of the engineering analysis, sampling and analysis program, and the water and wastewater data derived from sampling are presented in Section V of the development document.

Analysis for the toxic pollutants is both expensive and time consuming, costing between $650 and $1,000 per sample for a complete analysis. The cost in dollars and time limited the amount of sampling and chemical analysis performed. Although EPA fully believes that the available data support the limitations proposed, the Agency would have preferred a larger data base and continues to seek additional data as part of this rulemaking. In addition, EPA will periodically review these limitations as required by the Act and make any revisions supported by new data.

## VI. Industry Subcategorization

In developing this regulation, it was necessary to determine whether different effluent limitations and standards are appropriate for different segments of the canmaking industry. The major factors considered in identifying subcategories included: wastewater characteristics, basis material used, manufacturing processes, products manufactured, water use, water pollution control technology, treatment costs, solid waste generation, size of plant, age of plant, number of employees, total energy requirements, non-water quality characteristics, and unique plant characteristics. Section IV of the development document contains a detailed discussion of the factors considered and the rationale for the development of the canmaking subcategory.

All canmaking manufacturing processes were evaluated for the purpose of subcategorization. As discussed in Sections III and V of the development document, several canmaking process segments generate process wastewater and several do not. The manufacture of seamed cans, can ends, can tops and seamless cans from coil coated stock are inherently dry processes and are therefore excluded from this regulation.

The manufacture of most seamless can bodies generates wastewater from removing excess lubricants and cleaning the metal surface. The manufacture of some seamless can bodies does not generate wastewater because the can bodies are not washed. The distinction of whether or not the can bodies are washed provides the initial basis for establishing subcategorization for developing an effluent regulation for canmaking. Seamless can bodies which are not washed are therefore excluded from this regulation.

The seamless canmaking processes were further examined to determine whether additional segmentation was necessary. Seamless can bodies which are washed are formed by various processes; however 98 percent of the plants washing bodies form cans by the draw and iron (D&I) process used for manufacturing beverage cans. The determination was made that because all bodies were washed to remove lubricants and wastewater pollutants were similar, one D&I segment could be used to characterize all wastewaters in one canmaking subcategory. The Agency believes that the proposed limitations and standards can be met by manufacture of all types of washed seamless can bodies.

D&I can bodies are formed from aluminum or steel. Forming from aluminum is practiced by 77 percent of the D&I plants and wastewater flows and raw wastewater characteristics for the canmaking subcategory were determined from all D&I aluminum data. Several plants can interchange the basis material used for forming D&I bodies and the industry trend is to convert or add aluminum lines in previously steel only plants. Although wastewater flows and pollutant loadings are somewhat less for steel than for aluminum bodies, EPA has not further segmented this subcategory by basis material to avoid unnecessary regulatory complexity. EPA invites comment on this approach as stated in Section XXII of this preamble.

Canmaking subcategory wastewater flows are related to the amount of can bodies produced. For this reason, the production normalizing parameter used for establishing canmaking limitations and standards is the number of cans produced; the production normalized flow is liters per thousand cans.

## VII. Available Wastewater Control and Treatment Technology

### *A. Status of In-Place Technology*

Current wastewater treatment systems in the subcategory range from no treatment to a sophisticated physical chemical treatment combined with water conservation practices.

No treatment equipment was reported in-place at 8 canmaking plants. Oil removal equipment for skimming, chemical emulsion breaking or dissolved air flotation is in-place at 50 canmaking plants, 7 plants have chromium reduction systems, 26 canmaking plants have pH adjustment systems without settling, 30 plants indicate they have equipment for chemical precipitation and settling, 8 plants have filtration equipment in-place, 1 plant has ultrafiltration, and 1 plant has reverse osmosis equipment in-place.

The performance of the treatment systems in-place at all canmaking plants is difficult to assess because EPA has received a limited amount of canmaking effluent data. A request is made in Section XXII of this preamble for additional data. Additionally, some plants have equipment in-place which they are not operating because existing requirements can be achieved without operation of treatment equipment. Consequently, treatment performance is transferred from other categories and subcategories which treat similar wastewaters.

For the subcategory, in general, there is no significant difference between the pollutants generated by direct or indirect dischargers or in the degree of treatment employed; several indirect dischargers have the same treatment equipment in-place as the direct dischargers. The degree of treatment equipment operation is primarily dependent upon the existing requirements. Section V of the development document further evaluates the treatment systems in-place and the effluent data received.

### *B. Control Technologies Considered*

The control and treatment technologies available for this subcategory include both in-process and end-of-pipe treatments. These technologies are described in Section VII of the development document. In-process treatment includes water flow reduction in the canwasher by using water reuse or countercurrent cascade rinsing (to reduce the amount of water used to remove unwanted materials from cans). End-of-pipe treatment includes: hexavalent chromium reduction and cyanide precipitation when necessary; emulsion breaking and dissolved air flotation to remove oils; chemical precipitation of metals using hydroxides; removal of precipitated metals and other materials using settling or sedimentation; additional removal of solids using polishing filtration; and membrane filtration to remove additional oil.

Only 4 plants indicated that cyanide is known to be present in their wastewaters. For this small number of plants cyanide removal is only included in the model technology on an as needed basis and no limitation for cyanide is proposed. Similarly, no cost has been included for cyanide treatment. Thirty-eight plants reported chromium as known to be present in their wastewaters. This is the basis for proposing to regulate chromium. Seven plants reported having chromium reduction technology in place. Since the Agency does not know about the valence state of the chromium at the remaining thirty-one plants no cost has been included for installing chromium reduction technology; however it may be necessary to reduce hexavalent chromium if present in order to meet the limitations and standards.

The effectiveness of these treatment technologies has been evaluated and established by examining their performance on other coil coating subcategories and other category wastewaters containing primarily toxic metals which are similar to canmaking wastewaters. A brief description of how the Agency evaluated the performance of key technologies follows. A more complete description appears in Section VII of the development document and other documents in the rulemaking record.

1. *Hydroxide Precipitation and Sedimentation (Lime and Settle).* In considering the performance achievable using hydroxide (generally lime) precipitation and sedimentation of metals, EPA evaluated data on nine pollutants from coil coating and aluminum forming plants and plants in other categories with similar wastewater. The data base the Agency selected for lime and settle technology is called the combined metals data base. This data base is a composite of data for the nine pollutants from wastewaters treated by lime and settle technology obtained from EPA sampling and analysis of coil coating, copper and aluminum forming, battery manufacturing, and porcelain enameling. These wastewaters are similar to canmaking wastewaters because they contain dissolved metals that can be removed to the same degree by precipitation and settling.

The Agency regards the combined metals data base as the best available measure for establishing the concentrations attainable with lime and settle technology. This determination is based on the similarity of the raw wastewaters (see Section VII of the development document), and the larger number of plants used (21 plants versus data from 2 canmaking plants available). The larger quantity of data in the combined metals data base, as well as a greater variety of influent concentrations enhances the Agency's ability to estimate long-term levels and variability through statistical analysis. For the same reasons, this data base is the best measure of this treatment system's variability.

For 13 additional pollutants, the Agency used long term data from lime and settle treatment of similar wastewaters from other categories to derive a long term average. One day and monthly average values were developed from the long term average by applying the mean variance of the combined metals data base analysis. The derivation of the treatment effectiveness values for these thirteen additional pollutants is fully explained in Section VII of the developement document.

The treatment effectiveness values for aluminum, fluoride, phosphorous and oil and grease are used as part of the basis for this regulation. The aluminum value is derived from aluminum forming and coil coating data, while fluoride and phosphorous values are from electrical and electronics components manufacturing data. Oil and grease values are achieved by coil coating, aluminum forming and copper forming operations plus other categories throughout industry.

The use of the combined metals data base is appropriate for canmaking plants for the following reasons:

(a) *Process Chemistry.* The Agency believes that properly operated lime and settle treatment systems will result in effluent concentrations that are directly related to pollutant solubilities.

Untreated wastewater data from aluminum and steel canmaking facilities sampled by EPA were compared to data from the combined metals data base. Based on this comparison, the Agency concluded that chromium, zinc and TSS in canmaking wastewaters required treatment. All canmaking facilities sampled had raw TSS levels in the range of the raw values of the five category lime and settle data base. Although not all canmakers had chromium or zinc levels in the range that required treatment, some facilities did have concentrations of these pollutants in their raw waste comparable to levels found in the combined metals data base. The Agency concluded that lime and settle treatment of canmaking wastewater will achieve reductions of these pollutants similar to those demonstrated in the combined metals data base. The Agency does not believe any interfering properties exist in canmaking wastewater that would interfere with treatment performance.

(b) *Canmaking Data Base.* Process similarities exist between canmaking and other categories in the combined metals data base which treat chromium, zinc and TSS. An engineering evaluation of the canmaking process shows a substantial similarity between canmaking and aluminum forming process steps, and canmaking and coil coating processing steps. The processes used for forming are similar to aluminum forming. The processes used for cleaning and preparing the metal surface, the chemicals used, and waste products generated are similar for canmaking and coil coating.

EPA sampled two aluminum canmaking plants with lime and settle treatment for three days each. Effluent data from these plants were compared with the one day maximum value for the combined metals data base.

For toxic metals, chromium and zinc, all effluent values were equal to or lower than the combined metals data base one day maximum values. For TSS, one plant had values lower than the one day maximum and the other exceeded it; however both of these plants were indirect dischargers and were not required to control TSS. The Agency also compared the combined metals data base performance values with available NPDES permits. Where TSS is monitored, the permit limitations are for concentrations less than those in the combined metals data base. Additional long term data on these plants were not available to support lower TSS concentrations for canmaking effluent. The Agency believes that the proposed toxic metal and TSS values are reasonable and can be achieved by canmaking plants.

2. *Oil Removal (Skimming, Dissolved Air Flotation, and Chemical Emulsion Breaking).* In both canmaking and aluminum forming, lubricants are used to form the metal into a specified shape. In both coil coating and canmaking, oil and grease are removed from the metal surface, the metal surface is usually chemically coated to improve adherence of the finish coat, and an organic coating is applied. Oil and grease levels in canmaking wastewaters are substantially higher than other coil coating subcategories because of the forming operations for can bodies. Once oil and grease levels are reduced to comparable levels of other categories treating toxic metals and oil and grease through the application of oil removal technologies such as chemical emulsion breaking and dissolved air flotation,

lime and settle technology can remove oil and grease from canmaking wastewaters to the same extent that the technology can remove these pollutants from the wastewaters of the other categories.

The effectiveness of oil removal technology has been widely demonstrated in many industrial categories, and is detailed in Section VII of the development document. While the concentration levels are usually attainable by the application of quiescent settling and skimming, emulsion breaking and dissolved air flotation are included in the canmaking model treatment train to ensure that the oil removal technology is adequate and to remove the oil found in the subcategory.

Oil removal technology and lime and settle technology are considered as the basis for the proposed regulation. In canmaking a greater number and variety of forming lubricants and cleaning formulations may be used than in coil coating. Many of these formulations are interchangeable, and changes result in differences in the toxic pollutants that may appear in canmaking wastewaters. The Agency believes that by controlling the most prevalent toxic metals, some conventional and nonconventional pollutants, and total toxic organics (TTO) with oil removal and lime and settle technology, pollutants present as a result of these variations will also be controlled.

3. *Filtration.* EPA established the pollutant concentrations achievable with lime precipitation, sedimentation and polishing filtration (lime, settle, and filter) with data from three plants with the technology in-place: one nonferrous metals manufacturing plant and two porcelain enameling plants whose wastewater is similar to wastewater generated by canmaking plants. In generating long-term average standards, EPA applied variability factors from the combined metals data base because the combined data base provided a better statistical basis for computing variability than the data from the three plants sampled. In fact, the use of the lime and settle combined data base variability factors is probably a conservative assumption because filtration is a less variable technology than lime and settle, since it is less operator dependent.

For pollutants for which there were no data, long-term concentrations were developed assuming that filtration would remove 33 percent more pollutants than lime precipitation. This assumption was based upon a comparison of removals of several pollutants by lime, settle, and filter technology with the removals of pollutants from lime and settle technology.

EPA selected this approach because of the extensive long-term data available from these three plants. The Agency believes that the use of polishing filtration data from these plants is justified because the wastewaters are similar. Since the Agency determined that lime and settle technology will produce identical results for canmaking as well as the other categories in the combined metals data base, it is reasonable to assume that polishing filters treating these waste streams will produce a comparable final effluent.

The Agency solicits comments on the use of the combined metals data base for canmaking, and requests submission of additional data from canmaking plants using properly operated oil removal, lime and settle, and lime, settle and filter treatment systems. (See Section XXII of this preamble).

In addition to end-of-pipe treatment technologies, the limitations and standards in this proposed regulation are based on process controls to achieve reductions in wastewater discharge flow. Flow-reduction techniques vary depending on the level of control. The techniques and the bases for the Agency's estimates of what they can achieve are explained in the relevant sections below.

The treatment performance data discussed above are used to obtain maximum daily and monthly average pollutant concentrations. These concentrations (mg/1) along with the canmaking production normalized flows (1/1000 cans) are used to obtain the maximum daily and monthly average values (mg/1000 cans) for effluent limitations and standards. The monthly average values are based on the average of ten consecutive sampling days. The ten day average value was selected as the minimum number of consecutive samples which need to be averaged to arrive at a stable slope on a statistically based curve relating one day and 30 day average values and it approximates the most frequent monitoring requirement of direct discharge permits. The monthly average numbers shown in the regulation are to be used by plants with combined wastestreams that use the "combined wastestream formula" set forth at 40 CFR 403.6(e) and by permit writers in writing direct discharge permits.

## VIII. Best Practicable Technology (BPT) Effluent Limitations

The factors considered in defining best practicable control technology currently available (BPT) include the total cost of applying technology in relation to the effluent reduction benefits derived, the age of equipment and facilities involved, the process employed, non-water-quality environmental impacts (including energy requirements), and other factors the Administrator consideres appropriate. In general, the BPT level represents the average of the best existing performances of plants of various ages, sizes, processes or other common characteristics. Where existing performance is uniformly inadequate, BPT may be transferred from a different subcategory or category. Limitations based on transfer technology must be supported by a conclusion that the technology is, indeed, transferable and a reasonable prediction that it will be capable of achieving the prescribed effluent limits. (See *Tanners' Council of America* v. *Train*, 540 F.2d 1188, 4th Cir. 1976.) BPT focuses on end-of-pipe treatment rather than process changes or internal controls, except where such are common industry practice.

The cost-benefit inquiry for BPT is a limited balancing, conducted at EPA's discretion, which does not require the Agency to quantify benefits in monetary terms. (See, for example, *American Iron and Steel Institute* v. *EPA*, 526 F.2d 1027, 3rd Cir. 1975.) In balancing costs with effluent reduction benefits, EPA considers the volume and nature of existing discharges, the volume and nature of discharges expected after application of BPT, the general environmental effects of the pollutants, and the cost and economic impacts of the required pollution control level. The Act does not require or permit consideration of water quality problems attributable to particular point sources or industries, or water quality improvements in particular water bodies. Therefore, EPA has not considered these factors. (See *Weyerhaeuser Company* v. *Costle*, 590 F.2d 1011, 1026, D.C. Cir. 1978).

In developing the proposed BPT limitations, an evaluation was made of canmaking data for both the 7 direct and 81 indirect discharges. The Agency first considered the amount of water used per canmaking line at each plant which was sampled or which supplied usable dcp data. The Agency noted that more than half (32 of 51) of the D&I aluminum can plants reuse water within the canwasher. (Reuse within the canwasher is defined to mean using the same water in more than one operation before discharging it to wastewater treatment.) This practice reduces the amount of water used to wash cans and

is commonly practiced within the subcategory so that it constitutes BPT. The normalized wastewater flow (liters per 1000 cans) proposed at BPT for canmaking is based on the average of these 32 plants.

The model end-of-pipe treatment technology EPA is using as the basis for proposing for BPT is oil removal by dissolved air flotation and emulsion breaking, chromium reduction and cyanide precipitation when necessary, and lime and settle technology to remove other pollutants. Treatment equipment for BPT technology is reported to be installed at plants in this subcategory. Of the 76 plants that supplied usable dcp data, 50 have oil removal treatment including 17 that have emulsion breaking and 16 that have installed dissolved air flotation. Chromium reduction equipment is reported to be in-place at 7 plants. Thirty plants have lime and settle treatment equipment in-place, and 12 of these plants have all of the model BPT treatment equipment in-place. Clearly the frequent occurrence of these technologies indicates that they form an appropriate model technology on which to base BPT.

The more significant pollutants found in the wastewaters of the canmaking subcategory and regulated under BPT include chromium, zinc, aluminum, fluoride, phosphorous, oil and grease, TSS and pH. Sections VII and IX of the development document explain the derivation of treatment effectiveness data and the calculation of BPT limitations.

Compliance with BPT limitations will result in direct dischargers removing (from raw waste) 4,415 kg/yr of toxic pollutants and 7.31 million kg/yr of other pollutants at a capital cost (1982 dollars) of $1.0 million and a total annual cost of $0.45 million including interest and depreciation. EPA is using raw waste rather than estimated current discharge values because of the difficulty of making a meaningful estimate of current discharge levels when equipment in-place is not being consistently operated.

EPA expects no plant closures, unemployment, or changes in industry production capacity as a result of compliance with the BPT effluent limitations. The Agency has determined the effluent reduction benefits associated with compliance with BPT limitations justify these costs.

## IX. Best Available Technology (BAT) Effluent Limitations

The factors considered in assessing best available technology economically achievable (BAT) include the age of equipment and facilities involved, the process employed, process changes, nonwater-quality environmental impacts (including energy requirements) and the costs of applying such technology (Section 304(b)(2)(B)). At a minimum, the BAT technology level represents the best economically achievable performance of plants of various ages, sizes, processes, or other shared characteristics. As with BPT, where existing performance is uniformly inadequate, BAT may be transferred from a different subcategory or category. BAT may include feasible process changes or internal controls, even when not common industry practice.

The required assessment of BAT "considers" costs, but does not require a balancing of costs against effluent reduction benefits (see *Weyerhaeuser* v. *Costle, supra*). In developing the proposed BAT, however, EPA has carefully considered the cost of the BAT treatment. The Agency has considered the volume and nature of the estimated present discharges, the volume and nature of discharges expected after the application of BAT, the general environmental effects of the pollutants, and the costs and economic impacts of the required pollution control levels on the industry.

Despite this consideration of costs, the primary determinant of BAT is effluent reduction capability. As a result of the Clean Water Act of 1977, the achievement of BAT has become the principal national means of controlling toxic water pollution.

The agency has considered three sets of technology options for the subcategory that might be applied at the BAT level. The options are described in detail in Section X of the development document and are outlined below.

The pollutants regulated in the canmaking subcategory under BAT include chromium, zinc, aluminum, fluoride, and phosphorous. The Agency considered establishing a Total Toxic Organics (TTO) limitation at BAT for the toxic organic pollutants listed in Appendix E. However, data from plants with similar wastewaters and treatment (aluminum forming plants) show a 97 percent reduction in the concentrations of toxic organics with the effective treatment and removal of oil and grease (see Section VII and X of the development document). Thus, the Agency has determined that the oil and grease limitation at BCT will provide adequate control of the toxic organics, and therefore, is not establishing a TTO limit at BAT.

The cost estimates for the various treatment options are detailed in Section VIII of the development document. Control technologies and treatment effectiveness are detailed in Section VII, and effluent reduction benefits are detailed and tabulated in Section X of the development document. The Economic Impact Analysis contains an analysis of potential economic impacts for all regulatory options considered.

As noted below, technology options more stringent than those adopted as a basis for this proposal are available. Proposed BAT limitations are based on BAT Option 1. In order to make a final decision, EPA solicits the submission of all information available on the costs of these technologies and the effluent reductions they will achieve. EPA will decide which technologies to select and which limitation to promulgate after consideration of all information available, including the information received in comments submitted on this proposal, its current information, and the results of any additional studies it sponsors. The final regulation may well be based upon a technology other than that which forms the basis for the current proposal. The BAT limitations based on BAT Option 2 are shown in Section II of the development document.

*Option 1.* BAT option 1 is based on BPT level treatment (chrome reduction and cyanide removal when required, emulsion breaking, dissolved air flotation, hydroxide precipitation and sedimentation) with the addition of in-process flow reduction to reduce the discharge of toxic pollutants to the environment. The principal in-process water reduction technology is the use of a countercurrent cascade rinse in the canwasher. This technology is expected to reduce the total discharge flow by 67.5 percent. (See Section VII of the development document.)

*Option 2.* This option includes chrome reduction and cyanide removal when required, emulsion breaking, dissolved air flotation, hydroxide precipitation, sedimentation and polishing filtration. BAT option 2 builds on the end-of-pipe treatment technology for BAT option 1 by adding a polishing filter to improve the removal of toxic metals and nonconventional pollutants. The wastewater discharge of this option flow is the same as option 1.

*Option 3.* This option includes chrome reduction and cyanide removal when required, emulsion breaking, dissolved air flotation, hydroxide precipitation, sedimentation, polishing filtration, and ultrafiltration. BAT option 3 builds on the reduced wastewater flows and end-of-pipe treatment of option 2, and adds ultrafiltration. This option reduces the amount of toxic organics discharged

which is comparable to the oil and grease removals, as discussed above.

The pollutant removals and costs of the BAT options are summarized below. Removals are for regulated pollutants above raw waste levels and compliance costs are above treatment equipment in-place.

| Pollutant removal kilograms per year (pounds per year) | | | Costs (dollars in thousands) | |
|---|---|---|---|---|
| Option | Toxics | Other (millions) | Capital | Annual |
| BPT | 4,415(9,712) | 7.31(16.09) | $1,000 | $450 |
| BAT-1 | 4,633(10,192) | 7.33(16.13) | 680 | 420 |
| BAT-2 | 4,651(10,232) | 7.34(16.14) | 910 | 450 |
| BAT-3 | 4,651(10,232) | 7.34(16.15) | 3,310 | 2,300 |

*BAT Selection* EPA is proposing BAT effluent limitations based on technology option 1 because it substantially reduces the discharge of toxic pollutants and the technology is being practiced in the subcategory Six plants presently meet the flow basis and 12 plants have the BAT treatment equipment in-place. Additionally, the Agency believes that industry will install BAT technology equipment rather than installing BPT and upgrading it to BAT. Implementation of these BAT limitations will remove an estimated 4,633 kg/yr of toxic pollutants and 7.33 million kg/yr of other pollutants (from raw waste) at a capital cost of $0.68 million and a total annual costs of $0.42 million. The incremental effluent reduction benefits of BAT above BPT are the removal annually of 218 kg of toxic pollutants and 20,000 kg of other pullutants. The costs for BAT are lower than for BPT because of the smaller end-of-pipe treatment system needed as a result of flow reduction. Seven direct dischargers may incur costs under the BAT limitations. EPA expects no plant closures, unemployment, or changes in industry production capacity as a result of the proposed BAT effluent limitations.

The BPT option was not selected because it considers only widely practiced end-of-pipe technologies, little in-process change, and is more costly than the selected BAT option. BAT Option 2 is not being proposed because the added removals above option 1 are very small. No plant closures or job losses are projected for this option. Option 3 is not being proposed because of the very substantial costs and extremely low additional pollutant removals (less than one pound per year of toxic pollutants). Nine plants are projected to close at this option. The Agency invites comments on the technology options not selected as the basis for BAT.

## X. New Source Performance Standards (NSPS)

The basis for new source performance standards (NSPS) under Section 306 of the Act is the best available demonstrated technology (BDT). New plants can incorporate the best and most efficient canwashing processes and wastewater treatment technologies, and, therefore, Congress directed EPA to consider the best demonstrated process changes, in-plant controls, and end-of-pipe treatment technologies to reduce pollution to the maximum extent feasible.

EPA considered a number of options for selection of NSPS technology. Options included those discussed under BAT (options 1–3) plus two additional options discussed below. These options were not considered under BAT because most of the existing plants lack sufficient space to add additional stages to the canwasher. Each option is discussed in Sections X and XI of the development document and costs are discussed in Section VIII. As discussed in the Economic Impact Analysis, none of the options would present barriers to entry by new plants.

The pollutants regulated under NSPS include chromium, zinc, aluminum, fluoride, phosphorus, oil and grease, TSS, and pH.

*Option 4.* NSPS option 4 is based on the flow reduction achieved by the installation of a 9-stage canwasher or its equivalent. This technology includes at least three additional stages for using countercurrent rinses and recirculation of rinses to minimize wastewater generation. The option reduces total discharge flow by over 90 percent when compared to raw waste discharge, and by 75 percent when compared to option 1. End-of-pipe treatment includes chrome reduction and cyanide removal when required, emulsion breaking, dissolved air flotation, hydroxide precipitation and sedimentation, which is the same as option 1. Assuming a new plant installs six production lines, the investment costs would be $0.97 million and annual costs would be $0.55 million. Pollutant removals would be 28,272 kg/yr for toxics and 44.04 million kg/yr for other regulated pollutants above raw waste.

*Option 5.* NSPS option 5 included flow control to reduce total discharge flow by over 90 percent (same as option 4). End-of-pipe treatment includes chrome reduction and cyanide removal when required, emulsion breaking, dissolved air flotation, hydroxide precipitation, sedimentation, and polishing filtration which is the same as option 2. Assuming a new plant installs six production lines, the investment costs would be $1.02 million and annual costs would be $0.57 million. Pollutant removals would be 28,296 kg/yr for toxics and 44.05 million kg/yr for other regulated pollutants above raw waste.

The Agency also considered an option requiring no discharge of process wastewater pollutants. One plant is achieving this level of pollutant reduction using water use reduction, ultrafiltration, reverse osmosis, and water reuse. This system of pollutant reduction is costly; investment costs greater than $1.7 million and annual costs greater than $0.97 million for a six line production plant. This option is not considered as the basis for NSPS because of the high costs associated with this technology. Specific comment is requested on the cost, and possible inhibition to the construction of new sources that this option might involve.

*NSPS Selection.* EPA is proposing NSPS based on technology option 4. The flow basis for this option is the achieved performance of 4 plants in the industry. This option was selected because it substantially reduces the discharge of toxic pollutants and has been adequately demonstrated in the industry. Additionally, the new source flow reduction is an appropriate technology for NSPS because the flows are demonstrated in this subcategory and because new plants have the opportunity to design and implement the most efficient processes without retrofit costs and space availability limitations. Moreover, the Agency believes there are significant efficiency benefits associated with this option including reduced water use charges and sewer charges, and decreased treatment system size (and attendant cost savings. Technology options 1, 2 and 3 were rejected because the Agency has determined that these options would not comply with statutory standards for NSPS. Option 5 was rejected because the added removals above option 4 are very small and do not seem to justify the installation of filters. The Agency requests comments on these options (See Section XXII of this preamble).

## XI. Pretreatment Standards for Existing Sources (PSES)

Section 307(b) of the Act requires EPA to promulgate pretreatment standards for existing sources (PSES), which must be achieved within three years of promulgation. PSES are designed to prevent the discharge of pollutants which pass through, interfere with, or are otherwise incompatible with the operation of publicly owned treatment works (POTW). The legislative history of the 1977 Act indictes that pretreatment standards are to be technology-based and analogous to the best available technology for removal of toxic pollutants. The general pretreatment regulations can be found at 40 CFR Part 403. (46 FR 9404, January 28, 1981; and 47 FR 42688, September 28, 1982).

Before proposing pretreatment standards, the Agency examines whether the pollutants discharged by the industry pass through the POTW or interfere with the POTW operation or its chosen sludge disposal practices. In determining whether pollutants pass through a POTW, the Agency compares the percentage of a pollutant removed by POTW with the percentage removed by the direct dischargers applying BAT. A pollutant is deemed to pass through the POTW when the average percentage removed nationwide by well-operated POTW meeting secondary treatment requirements is less than the percentage removed by direct dischargers complying with BAT effluent limitations guidelines for that pollutant.

This approach to the definition of pass through satisfies two competing objectives set by Congress: That standards for indirect dischargers be equivalent to standards for direct dischargers, while, at the same time, that the treatment capability and performance of the POTW be recognized and taken into account in regulating the discharge of pollutants from indirect dischargers. Rather than compare the mass or concentration of pollutants discharged by the POTW with the mass or concentration discharged by a direct discharger, the Agency compares the percentage of the pollutants removed by the direct discharger. The Agency takes this approach because a comparison of mass or concentration of pollutants in a POTW effluent with pollutants in a direct discharger's effluent would not take into account the mass of pollutants discharged to the POTW from nonindustrial sources nor the dilution of the pollutants in the POTW effluent to lower concentrations from the addition of large amounts of nonindustrial wastewater.

The pollutants regulated in the canmaking subcategory under PSES include chromium, zinc, aluminum, fluoride, phosphorous and Total Toxic Organics (TTO).

As discussed previously different metal cleaning and surface coating formulations can be used in the canmaking process. Aluminum is regulated as an indicator pollutant to assure removal of chromium and zinc and other toxic metals, if chemical formulation were changed to eliminate chromium or zinc by substituting some other toxic metal. Under 403.7(a)1 of the general pretreatment regulation, each categorical pretreatment standard that uses an indicator pollutant specifies whether or not a removal credit may be granted for the pollutant. In this regulation the POTW may give credit for aluminum only to the extent that it is determined that chromium, zinc, and other toxic metals are removed by the POTW. The Agency recognizes that POTW add aluminum to assist in the removal of solids; however this is not a basis for granting a removal credit.

As discussed previously, there are toxic organics associated with lubricants used in the canmaking subcategory. These toxic pollutants are not specifically regulated at BAT, because for direct dischargers, the BCT oil and grease limits should provide adequate removal. As discussed in the development document, the BCT limitation for oil and grease will remove 97 percent of the toxic organics. This is greater than the removal of toxic organics from a well operated POTW achieving secondary treatment which removes about 65 percent. Accordingly, the Agency believes that there is pass through of toxic organic pollutants associated with these oil waste streams. Given the mix of toxic organic pollutants (See Appendix E) found in these wastestreams, and the fact that they may pass through POTW, the Agency proposes to establish a pretreatment standard for TTO to control these pollutants. The proposed TTO standard is based on the application of oil and grease removal technology which achieves the same removal of TTO as the BCT model treatment technology.

In the canmaking subcategory, the Agency has also concluded that the pollutants that would be regulated (chromium, zinc, aluminum, fluoride, and phosphorus) under these proposed standards pass through the POTW. Pollutants removed by POTW from chromium and zinc are 65 percent, for aluminum range from 80 to 90 percent and for phosphorous range from 10 to 20 percent. There is no removal of fluoride by the POTW. The percentage that can be removed by a canmaking direct discharger applying BAT is expected to be over 98 percent. Accordingly, these pollutants pass through POTW. In addition, toxic metals are not degraded in the POTW; they may limit a POTW's chosen sludge disposal method.

The pretreatment standards are expressed as mass standards only. This is because a concentration based regulation would not assure the substantial additional pollutant removals achievable by flow reduction.

EPA proposes to establish a Total Toxic Organics (TTO) limitation based on the data presented in Section VII of the technical development document. Analysis of toxic organics is costly and requires delicate and sensitive equipment. Therefore, the Agency proposes to establish as an alternative to monitoring for total toxic organics an oil and grease limit equivalent to the BCT limit for which the analysis is much less costly and frequently can be done at the plant. Data indicate that the toxic organics are in the oil and grease and by removing the oil and grease the toxic organics should also be removed. See discussion in Section VII of the development document. The Agency requests comment on the TTO limit and the alternate monitoring parameter of oil and grease. Because oil and grease is used as an indicator for TTO, POTW may not give a removal credit for the oil and grease. EPA also requests comments on whether to simply promulgate an oil and grease limitation to effectively control organics.

EPA is proposing that the deadline for compliance with PSES in this regulation be three years after promulgation. EPA believes this time for compliance is reasonable because most of the plants do not now have all of the required equipment in-place and this amount of time generally will be needed for proper engineering, installation and start-up of the treatment facilities. The Agency invites comments with supporting documentation and rationale on the need for this or any shorter compliance time.

### *PSES Option Selection*

The Agency considered PSES options equivalent to BPT (PSES–0) and the BAT options 1, 2 and 3. PSES equivalent to BAT option 1 was selected for proposed standards because it is demonstrated, removes more pollutants than PSES–0 which would pass through POTW, and is economically achievable (annual costs are less than for PSES–0). Options

2 and 3 were not chosen for the reasons discussed under the BAT section above.

The pollutant removals and costs of the PSES options are summarized below. Removals for regulated pollutants are above raw waste and compliance costs are above treatment equipment in place.

| Pollutant removals kilograms per year (pounds per year) | | | Costs (dollars in thousands) | |
|---|---|---|---|---|
| Option | Toxics | Other (millions) | Capital | Annual |
| PSES-0 | 44,880(98,736) | 74.6(164.1) | $34,000 | $18,400 |
| PSES-1 | 47,255(103,900) | 74.81(164.6) | 27,600 | 16,700 |
| PSES-2 | 47,440(104,400) | 74.84(164.8) | 31,800 | 17,400 |
| PSES-3 | 47,440(104,400) | 74.84(164.8) | 43,500 | 32,900 |

Implementation of PSES will remove an estimated 47,255 kg/yr of toxic metals pollutants and 75 million kg/yr of other pollutants (from raw waste) at a capital cost of $27.6 million and a total annual cost of $16.7 million. Section VIII of the development document explains the basis for these costs. PSES affects 81 indirect discharging canmaking plants. EPA predicts no plant closures resulting from this regulation. No changes in industry production capacity are expected as a result of these pretreatment standards. The Economic Impact Analysis explains the economic impacts in detail.

## XII. Pretreatment Standards for New Sources (PSNS)

Section 307(c) of the Act requires EPA to promulgate pretreatment standards for new sources (PSNS) at the same time that it promulgates NSPS. New indirect dischargers will produce wastes presenting the same pass-through interference, and sludge disposal problems that existing dischargers have. New indirect dischargers, like new direct dischargers, have the opportunity to incorporate the best available demonstrated technologies including process changes, in-plant controls, and end-of-pipe treatment technologies, and to use plant site selection to ensure adequate treatment system installation.

The pollutants regulated in the canmaking subcategory under PSNS include chromium, zinc, aluminum, fluoride, phosphorous and TTO. The reason for selecting these pollutants are set forth under PSES above.

The PSNS treatment options considered are identical to the NSPS options. As explained above under PSES, the pollutants considered for regulation under PSNS pass through POTW. For PSNS the Agency is proposing standards based on the same treatment technology options as NSPS. The selected options will not create barriers to entry, as is discussed in the Economic Impact Analysis.

The Agency also considered requiring no discharge of process wastewater pollutants. This option was rejected for the reasons set forth for NSPS.

The mass standards set forth as PSNS are presented here as the only method of designating pretreatment standards. Regulation on the basis of concentration will not assure the substantial pollutant removals that flow reduction will achieve. Flow reduction is a significant part of the model technology for PSNS.

## XIII. Best Conventional Technology (BCT) Effluent Limitations

The 1977 amendments added Section 301(b)(2)(E) to the Act, establishing "best conventional pollutant control technology" (BCT) for discharges of conventional pollutants from existing industrial point sources. Conventional pollutants are those defined in Section 304(a)(4)—biological oxygen demanding pollutants ($BOD_5$),total suspended solids (TSS), and pH—and any additional pollutants defined by the Administrator as "conventional." On July 30, 1979, EPA added oil and grease to the conventional pollutant list (44 FR 44501).

BCT is not an additional limitation but replaces BAT for the control of conventional pollutants. In addition to other factors specified in section 304(b)(4)(B), the Act requires that BCT limitations be assessed in light of a two part "cost-reasonableness" test. (See *American Paper Institute* v. *EPA*, 660 F. 2d 954 4th Cir. 1981.) The first test compares the cost for private industry to reduce the discharge of its conventional pollutants with the costs to POTW for similar levels of reduction in the discharge of these pollutants. The second test examines the cost-effectiveness of additional industrial treatment beyond BPT. EPA must find that limitations are "reasonable" under both tests before establishing them as BCT. In no case may BCT be less stringent than BPT.

EPA published its original methodology for carrying out the BCT analysis on August 29, 1979 (44 FR 50732). In the case mentioned above, the Court of Appeals ordered EPA to correct data errors underlying EPA's calculation of the first test, and to apply the second cost test. (EPA had argued that a second cost test was not required.) EPA proposed its new methodology on Ocotober 29, 1982 (47 FR 49176).

For the canmaking subcategory, EPA has determined that the BPT end-of-pipe technology sequence with added flow reduction (BCT technology) is capable of removing significant amounts of conventional pollutants. The Agency compared the cost of removing conventional pollutants using the BCT technology with the costs of achieving comparable treatment in a POTW. Using the newly revised proposed BCT methodology, the result of this comparison indicates the cost for this removal is (−) $1.39 per pound, which is substantially less than the proposed POTW benchmark of $0.27 per pound. Because BCT technology is less costly than BPT technology the second phase of the cost test will also show a negative value. The application of BCT technology above BPT is accepted, and BCT limitations are established based on this technology for oil and grease, TSS, and pH.

The lesser cost of BCT technology is due to the reduced wastewater flow and resultant reduction in treatment equipment size. The Agency specifically requests comment on this aspect of the BCT methodology and, in particular, on the negative cost results shown for BCT technology.

## XIV. Pollutants and Subcategories Not Regulated

The Settlement Agreement contains provisions authorizing the exclusion from regulation, in certain instances, of toxic pollutants and industry segments.

Paragraph 8(a)(iii) of the Revised Settlement Agreement allows the Administrator to exclude from regulation specific pollutants not detectable by Section 304(h) analytical methods or other state-of-the-art methods. The toxic pollutants not detected in this subcategory and therefore, excluded from regulation are listed in Appendix B to this notice.

Paragraph 8(a)(iii) of the Revised Settlement Agreement allows the Administrator to exclude from regulation toxic pollutants detected in amounts too small to be effectively reduced by technologies known to the Administrator. Appendix C to this notice lists the toxic pollutants in this subcategory that were detected in the effluent in amounts that are at or below the nominal limit of analytical quantification which are too small to be effectively reduced by technologies and

that are therefore excluded from regulation.

Paragraph 8(a)(iii) also allows the Administrator to exclude from regulation toxic pollutants present in amounts too small to be effectively reduced by technologies considered applicable to the subcategory. Appendix D lists those toxic pollutants which are not treatable using technologies considered applicable to the category.

Paragraph 8(a)(iii) also allows the Administrator to exclude from regulation specific pollutants which will be effectively controlled by the technologies upon which are based other effluent limitations and guidelines, standards of performance or pretreatment standards. The toxic pollutants considered for regulation, but excluded from BPT, BAT limitations and NSPS because adequate protection is now provided by this regulation through the control of other pollutants, are listed for this subcategory in Appendix E of this preamble.

Paragraph 8(a)(iv) and 8(b)(ii) of the Revised Settlement Agreement allow the Administrator to exclude from regulation subcategories for which the amount and the toxicity of pollutants in the discharge does not justify developing national regulations. Some segments of the canmaking subcategory meet this provision and are excluded from this regulation because there is no discharge of process wastewater. These segments are listed in Appendix F to this preamble.

## XV. Cost and Economic Impact

Executive Order 12291 requires EPA and other agencies to perform regulatory impact analyses of major regulations. Major rules impose an annual cost to the economy of $100 million or more or meet other economic impact criteria. The proposed regulation for the canmaking subcategory of the coil coating category is not a major rule. The costs to be incurred by this industry will be significantly less than $100 million. Therefore, formal regulatory impact analysis is not required. This proposed rulemaking satisfies the requirement of the Executive Order for a non-major rule. The Agency's regulatory strategy considered both the cost and the economic impacts of the proposed rulemaking.

The Economic Impact Analysis report presents the economic effects for the industry as a whole and for typical plants covered by the proposed regulation. Compliance costs are based on engineering estimates of capital requirements for the effluent control systems described earlier in this preamble. The report assesses the impact of price changes, production changes, plant closures, job losses and balance of trade effects.

EPA has identified 89 facilities that manufacture and wash seamless aluminum and steel cans and are covered by this regulation. Seven are direct dischargers, 81 are indirect dischargers, and 1 does not discharge process wastewater. Total investment for BAT and PSES is estimated to be $28.3 million, with annual costs of $17.1 million, including depreciation and interest. These costs are expressed in 1982 dollars and account for existing treatment in place among canmaking facilities. These cost estimates are based on the determination that canmaking facilities will move from their existing treatment to either BAT or PSES for the BAT treatment technology can installed by canmaking facilities at a cost proportionally lower than the BPT treatment technology.

In order to measure the potential economic effects of the proposed regulation, the Agency conducted a plant-by-plant analysis which focused on profitability and capital availability requirements. Both characteristics are examined through standard financial analysis techniques. Plant closure determinations are based primarily on measures of financial performance such as return on assets and compliance investment cost as a percent of annual revenues.

No plant closures or job losses were projected as a result of compliance costs for this regulation. Annual compliance costs for BAT and PSES are relatively small, with annual compliance costs accounting for less than 1 percent of plant revenues. In addition, because the canmaking industry appears to be highly competitive, it is assumed that producers would attempt to absorb their compliance costs and would not raise their prices. This assumption represents a worst case situation and to the extent prices are raised, may overstate the impact of the regulation.

Return on investment (ROI) was chosen to assess the impact of compliance cost on plant profitability. Plants with an after-compliance ROI of less than 7 percent were considered potential closure candidates. The underlying assumption is that plants cannot continue to operate as viable concerns if they are unable to generate a return on investment that is at least equal to the opportunity cost of other low risk investment alternatives. All canmaking facilities analyzed were found to have an after-compliance ROI greater than 7 percent. The Ratio of "compliance capital investment to revenues" (CCI/R) was used to provide a good indication of the relative magnitude of the compliance capital investment requirements. The ratio CCI/R was calculated for all canmaking facilities as compared to a "capital availability threshold value" (CCI/R) of 3 percent. If a plant's CCI/R ratio is less than the threshold value, the capital investment for treatment equipment may be financed out of a single year's internally generated funds without additional debt. None of the canmaking facilities had CCI/R ratios greater than the 3 percent threshold value.

In addition, EPA has conducted an analysis of the incremental removal cost per pound equivalent for each of the proposed technology based options. A pound equivalent is calculated by multiplying the number of pounds of pollutant discharged by a weighting factor for that pollutant. The weighting factor is equal to the water quality criterion for a standard pollutant (copper), divided by the water quality criterion for the pollutant being evaluated. The use of "pound equivalent" gives relatively more weight to removal of more toxic pollutants. Thus, for a given expenditure, the cost per pount equivalent removed would be lower when a highly toxic pollutant is removed than if a less toxic is removed. This analysis, entitled "Cost-Effectiveness Analysis," is included in the record of this rulemaking. EPA invites comments on the methodology used in this analysis.

Presented below are compliance costs for the following regulations: BPT, BAT, PSES, PSNS and NSPS. There are no BCT compliance costs because the effluent limitations are based on BAT technology which is less costly than BPT.

BPT: BPT regulations are proposed for direct discharges for the canmaking industry. This regulation will affect 7 facilities. Investment costs for BPT are $1.0 million; total annual costs are $0.45 million (in 1982 dollars). No plant closures or job losses are anticipated as a result of BPT.

BAT: BAT regulations will also affect the 7 direct discharges within the canmaking industry. To comply directly with BAT, these canmaking facilities will incur investment costs of $0.68 million and annual costs of $0.42. There are no plant closures or job losses projected as a result of BAT.

PSES: Pretreatment standards are proposed for indirect dischargers within the canmaking industry. 81 plants will incur investment costs of $27.6 million and annual costs of $16.7 million. There are no plant closures or job losses projected as a result of PSES.

NSPS/PSNS: The results of the economic analysis for new sources indicate that a new canmaking line will have an annual output volume of 300 million cans per production line. The incremental annual compliance costs of the recommended technology for new sources of the BAT/PSES option for a normal canmaking line is estimated to be approximately $20,000 which is less than 0.1 percent of plant revenues (assuming $90 per 1000 cans manufactured). In addition, the compliance capital investment for new sources is less than the required capital investment for the recommended BAT/PSES technology. These comparisons indicate that new sources would not be at a competitive disadvantage as a result of having to comply with NSPS/PSNS.

*Regulatory Flexibility Analysis:* Pub. L. 96–354 requires EPA to prepare an Initial Regulatory Flexbility Analysis for all proposed regulations that have a significant impact on substantial number of small entities. The analysis may be conducted in conjunction with or as part of other Agency analyses. A small business analysis for this industry is included in the Economic Impact Analysis. The number of plant lines was the primary variable recommended to distinguish firm size. The small size category includes approximately 20 facilities (46 percent of the industry total). The Agency invites comments on this size definition. Annual BAT and PSES compliance costs for small plants are approximately 38 percent of the estimated BAT/PSES costs for existing sources. Thus, capital costs are estimated to be $10,693,000 with annual costs of $4,074,000 for a canmaking facility with less than 3 production lines. For this proposed rulemaking, there are no significant impacts on small firms; therefore, a formal Regulatory Flexibility Analysis is not required.

## XVI. Non-Water Quality Aspects of Pollution Control

The elimination or reduction of one form of pollution may aggravate other environmental problems. Therefore, Sections 304(b) and 306 of the Act require EPA to consider the non-water quality environmental impacts (including energy requirements) of certain regulations. In compliance with these provisions, EPA has considered the effect of this regulation on air pollution, solid waste generation, and energy consumption. This proposal was circulated to and reviewed by EPA personnel responsible for non-water quality environmental programs. While it is always difficult to balance pollution problems against each other and against energy utilization, EPA is proposing regulations that it believes best serve often competing national goals.

The following are the non-water quality environmental impacts associated with the proposed regulations and are discussed in Section VIII of the Development Document:

### *A. Air Pollution*

Compliance with the proposed BPT, BAT, BCT, NSPS, PSES, and PSNS will not create any substantial air pollution problems. Precipitation and clarification, the major portion of the technology basis, should not result in any air pollution problems.

### *B. Solid Waste*

EPA estimates that canmaking plants generate a total of 7,100 kkg of solid waste per year from manufacturing process operations, including sludge from current wastewater treatment.

Wastewater treatment sludges contain toxic metals including chromium, and zinc.

EPA estimates that the proposed BPT limitations will contribute an additional 382 kkg per year of solid wastes. Proposed BAT and PSES will contribute approximately 3,950 kkg per year. Proposed NSPS and PSES will contribute approximately 1500 kkg per year. These sludges will necessarily contain additional quantities of toxic metal pollutants.

None of these wastewater treatment sludges from this subcategory are likely to be hazardous under the regulations implementing subtitle C of the Resource Conservation and Recovery Act (RCRA) when the model treatment technology is used to meet BAT or PSES. Generators of these wastes must meet requirements set forth at 40 CFR Part 260 *et seq.* (See 45 FR 33142–33143 (May 19, 1980).

### *C. Energy Requirements*

The canmaking industry in 1981 used about 3.9 billion kilowatt hours of energy. This regulation does not significantly affect the energy requirements of the industry. EPA estimates that the achievements of proposed BPT effluent limitations will result in a net increase in electrical energy consumption of approximately 1.5 million kilowatt-hours per year. Proposed BAT limitations are projected to add insignificant additional kilowatt-hours to electrical energy consumption.

The Agency estimates that proposed PSES will result in a net increase in electrical energy consumption of approximately 15.1 million kilowatt-hours per year.

The energy requirements for NSPS and PSNS are estimated to be similar to energy requirements for BAT. More accurate estimates are difficult to make because projections for new plant construction are variable.

## XVII. Best Management Practices

Section 304(e) of the Clean Water Act authorizes the Administrator to prescribe "best management practices" (BMP), described under Authority and Background. EPA is not now considering promulgating BMP specific to the canmaking subcategory.

## XVIII. Upset and Bypass Provisions

An issue of recurrent concern has been whether industry guidelines should include provisions authorizing noncompliance with effluent limitations during periods of "upset" or "bypass." An upset, sometimes called an "excursion," is unintentional noncompliance occurring for reasons beyond the reasonable control of the permittee. It has been argued that an upset provision in EPA's effluent limitations guidelines is necessary because such upsets will inevitably occur due to limitations in even properly operated control equipment. Because technology-based limitations are to require only what technology can achieve, it is claimed that liability for such situations is improper. When confronted with this issue, courts have been divided on the question of whether an explicit upset or excursion exemption is necessary or whether upset or excursion incidents may be handled through EPA's exercise of enforcement discretion. Compare *Marathon Oil Co.* v. *EPA*, 564 F.2d 1253 (9th Cir. 1977) with *Weyerhaeuser* v. *Costle*, supra and *Corn Refiners Association, et al.* v. *Costle*, No. 78–1069 (8th Cir., April 2, 1979). See also *American Petroleum Institute* v. *EPA*, 540 F.2d 1023 (10th Cir. 1976); *CPC International, Inc.*, v. *Train*, 540 F.2d 1320 (8th Cir. 1976); *FMC Corp.* v. *Train*, 539 F.2d 973 (4th Cir. 1976).

While an upset is an unintentional episode during which effluent limits are exceeded, a bypass is an act of intentional noncompliance during which waste treatment facilities are circumvented in emergency situations. Bypass provisions have, in the past, been included in NPDES permits.

EPA has determined that both upset and bypass provisions should be included in NPDES permits, and has recently promulgated NPDES regulations that include upset and bypass permit provisions. (See 40 CFR 122.60; 45 FR 33290; May 19, 1980.) The upset provision establishes an upset as an affirmative defense to prosecution for violation of technology-based effluent

limitations. The bypass provision authorizes bypassing to prevent loss of life, personal injury, or severe property damage. Permittees in canmaking will be entitled to the general upset and bypass provisions in NPDES permits. Thus these proposed regulations do not address these issues.

## XIX. Variances and Modifications

Upon the promulgation of final regulations, the numerical effluent limitations must be applied in all Federal and State NPDES permits thereafter issued to canmaking direct dischargers. In addition, on promulgation, the pretreatment limitations are directly applicable to indirect dischargers.

For the BPT effluent limitations, the only exception to the binding limitations is EPA's "fundamentally different factors" variance. See *E. I. duPont de Nemours and Co.* v. *Train*, 430 U.S. 112 (1977); *Weyerhaeuser Co.* v. *Costle, supra; EPA* v. *National Crushed Stone Association, et al.* 449 U.S. 64 (1980). This variance recognizes that there may be factors concerning a particular discharger that are fundamentally different from the factors considered in this rulemaking. This variance clause was originally set forth in EPA's 1973–1976 industry regulations. It now will be included in the general NPDES regulations and will not be included in the canmaking or other specific industry regulations. See the NPDES regulation, 40 CFR 125, Subpart D, 44 FR 32854, 32893 (June 7, 1979), 45 FR 33512 (May 19, 1980), 46 FR 9460 (January 28, 1981), and 47 FR 52309 (November 19, 1982) for the text and explanation of the "fundamentally different factors" variance.

Dischargers subject to the BAT limitations are also eligible for EPA's "fundamentally different factors" variance. In addition, BAT limitations for nonconventional pollutants may be modified under Sections 301 (c) and (g) of the Act which are now in 40 CFR 122.53(i)(2). Section 301(1) precludes the Administrator from modifying BAT requirements for any pollutants which are on the toxic pollutant list under Section 307(a)(1) of the Act. The economic modification section (301(c)) gives the Administrator authority to modify BAT requirements for nonconventional pollutants for dischargers who file a permit application after July 1, 1977, upon a showing that such modified requirements will: (1) Represent the maximum use of technology within the economic capability of the owner or operator and (2) result in reasonable further progress toward the elimination of the discharge of pollutants. The environmental modification section (301(g)) allows the Administrator, with the concurrence of the State, to modify Bat limitations for nonconventional pollutants from any point source upon a showing by the owner or operator of such point source satisfactory to the Administrator that:

(a) Such modified requirements will result at a minimum in compliance with BPT limitations or any more stringent limitations necessary to meet water quality standards;

(b) Such modified requirements will not result in any additional requirements on any other point or nonpoint source; and

(c) Such modification will not interfere with the attainment or maintenance of that water quality which shall assure protection of public water supplies, and the protection and propagation of a balanced population of shellfish, fish, and wildlife, and allow recreational activities, in and on the water and such modification will not result in the discharge of pollutants in quantities which may reasonably be anticipated to pose an unacceptable risk to human health or the environment because of bioaccumulation, persistency in the environment, acute toxicity, chronic toxicity (including carcinogenicity, mutagenicity or teratogenicity), or synergistic propensities.

Section 301(j)(1)(B) of the Act requires that application for modifications under section 301 (c) of (g) must be filed within 270 days after the promulgation of an applicable effluent guideline. Initial applications must be filed with the Regional Administrator and, in those States that participate in the NPDES Program, a copy must be sent to the Director of the State program. Initial applications to comply with 301(j) must include the name of the permittee, the permit and outfall number, the applicable effluent guideline, and whether the permittee is applying for a 301(c) or 301(g) modification or both. Applicants interested in applying for both must do so in their initial application. For further details, see 43 FR 40859, September 13, 1978.

The nonconventional pollutants limited under BAT in this regulation are aluminum, fluoride, and phosphorus. No regulations establishing criteria for 301(c) and 301(g) determinations have been proposed or promulgated. All dischargers who file an initial application within 270 days will be sent a copy of the substantive requirements for 301(c) and 301(g) determinations once they are promulgated. Modification determinations will be considered at the time the NPDES permit is being reissued.

Pretreatment standards for existing sources are subject to the "fundamentally different factors" variance and credits for pollutants removed by POTWs. (See 40 CFR 403.7, 493.13.) Pretreatment standards for new sources are subject only to the credits provision in 40 CFR 403.7. New source performance standards are not subject to EPA's "fundamentally different factors" variance or any statutory or regulatory modifications. (See *duPont* v. *Train, supra.*)

## XX. Relationship To NPDES Permits

The BPT, BAT, BCT and NSPS limitations in this regulation will be applied to individual canmaking plants through NPDES permits issued by EPA or approved State agencies under Section 402 of the Act. The preceding section of this preamble discussed the binding effect of this regulation on NPDES permits, except to the extent that variances and modifications are expressly authorized. This section describes several other aspects of the interaction of these regulations NPDES permits.

One matter that has been subject to different judicial views is the scope of NPDES permit proceedings in the absence of effluent limitations, guidelines, and standards. Under current EPA regulations, states and EPA regions that issue NPDES permits before regulations are promulgated do so on a case-by-case basis on consideration of the statutory factors. (See *U.S. Steel Corp.* v. *Train*, 556 F.2d 822, 844, 854 7th Cir. 1977.) In these situations, EPA documents and draft documents (including these proposed regulations and supporting documents) are relevant evidence, but not binding, in NPDES permit proceedings. (See 44 FR 32854, June 7, 1979.)

Another noteworthy topic is the effect of this regulation on the powers of NPDES permit-issuing authorities. The promulgation of this regulation does not restrict the power of any permit-issuing authority to act in any manner consistent with law or these or any other EPA regulations, guidelines, or policy. For example, the fact that this regulation does not control a particular pollutant does not preclude the permit issuer from limiting such pollutant on a case-by-case basis, when necessary to carry out the purposes of the Act. In addition, to the extent that State water quality standards or other provisions of State or Federal law require limitation of pollutants not covered by this regulation (or require more stringent

limitations on covered pollutants), such limitations must be applied by the permit-issuing authority.

One additional topic that warrants discussion is the operation of EPA's NPDES enforcement program, many aspects of which have been considered in developing this regulation. The Agency wishes to emphasize that, although the Clean Water Act is a strict liability statute, the initiation of enforcement proceedings by EPA is discretionary (*Sierra Club* v. *Train, 527* F 2nd. *485,* 5th Cir. 1977). EPA has exercised and intends to exercise that discretion in a manner that recognizes and promotes good faith compliance efforts.

## XXI. Summary of Public Participation

The Agency has had contact with individual can manufacturing companies and with the Can Manufacturers Institute during the collection of information and data basic to this proposal. Information they supplied was used in the preparation of this proposal.

## XXII. Solicitation of Comments

The Agency invites and encourages comments on any aspect of this proposed regulation but is particularly interested in receiving comments on the issues listed below. In order for the Agency to evaluate views expressed by commenters, the comments should contain specific data and information to support those views.

1. As is explained in Section VI of this preamble and Section IV of the development document for canmaking, the production of steel seamless cans and that of aluminum seamless cans are regulated as one subcategory with a single set of limitations and standards. The Agency seeks comments on whether the judgment to include the production of all seamless cans which are washed in a single subcategory is appropriate. Existing data on steel canmaking has shown that flows and pollutant loadings for steel canmaking are somewhat lower than those for aluminum canmaking. Interested persons are invited to submit information relevant to subcatgorization for this proposal. Additional information about the processes, use of lubricants and other materials, water use, and characterization of steel canmaking raw wastewaters and treated effluents is also requested.

2. The Agency has concluded, preliminarily, that basing BAT limitations and PSES and new source standards upon a technology train that includes polishing filtration would achieve little additional removal of pollutants. The Agency seeks data from canmakers, equipment suppliers, and other interested persons about the cost and pollutant removal benefits of polishing filtration and its ability to remove toxic and nonconventional pollutants from canmaking wastewaters. Wherever possible, persons submitting treatment effectiveness information should present long-term sampling data—especially paired raw wastewater-treated effluent data—from canmaking plants, or plants in other categories with comparable wastewaters, with well-operated polishing filters.

3. The Agency has included dissolved air flotation and chemical emulsion breaking as recommended technologies for existing sources that have high levels of oil and grease in their wastewaters. As is explained in Section VII of this preamble and Section VII of the development document, the Agency is confident that these technologies—in addition to oil skimming—will reduce oil and grease and TTO to concentrations that will allow the proposed limitations and standards to be met. These oil removal technologies perform well on wastewaters generated in other industries and are expected to perform satisfactorily on canmaking wastewaters. Dissolved air flotation is used in the canmaking industry, and the Agency previously has requested canmakers to supply data with respect to the performance of this technology. As of the date of this proposal no data has been received. The Agency would be interested in receiving data on the performance of dissolved air flotation and chemical emulsion breaking in canmaking facilities, however, to confirm the performance of these technologies. Wherever possible, interested persons should submit long-term sampling data—especially paired raw wastewater-treated effluent data—from canmaking plants with well-operated dissolved air flotation and chemical emulsion breaking technologies.

4. The Agency is continuing to seek additional data to support these proposed limitations and standards, and specifically requests long-term sampling data (especially paired raw wastewater treated effluent data) from canmaking plants having well-operated chemical precipitation and sedimentation systems.

5. To determine the economic impact of this regulations, the Agency has calculated the cost of installing BPT, BAT, PSES, NSPS, and PSNS for each facility for which canmaking data were available. The details of the estimated costs and other impacts are presented in Section VIII of the technical development document and in the Economic Impact Analysis. Based on these analyses, the Agency projects no plant closures or employment losses as a result of this regulation. Because the Agency did not have plant specific data on some financial measures, as such data is often proprietary, the Agency used industry-wide ranges or averages. The Agency invites comments on these analyses and projections. The Agency particularly seeks comment on whether incremental costs are achievable by canmakers; especially those that are small or less profitable. Commenters should not focus only on the likelihood of plant closures and employment losses but should also include data on the effects of the regulation on modernization or expansion of production, production costs, the ability to finance nonenvironmental investments, product prices, profitability, availability of less costly technology and international competitiveness.

6. The Agency is seeking comment on the achievability and costs associated with new source flow reduction. Specifically the Agency requests comment with supporting data on the efficiency benefits associated with flow reduction such as reduced water use charges, sewer charges, and decreased treatment system size and cost.

The proposed regulation was submitted to the Office of Management and Budget for review as required by Executive Order 12291. Any comments from OMB to EPA and any EPA response to those comments are available for public inspection at the EPA Public Information Reference Unit, Room 2922 (EPA Library), Environmental Protection Agency, 401 M Street, SW., Washington, D.C. 20460.

The reporting or recordkeeping provisions in this rule will be submitted for approval to the Office of Management and Budget (OMB) under section 3504(h) of the Paperwork Reduction Act of 1980, 44 U.S.C. 3501 *et seq.* Any final rule will explain how its reporting or recordkeeping provisions respond to any OMB or public comments.

## XXIV. List of Subjects in 40 CFR Part 465

Metal cans, Metal coating and allied services, Waste treatment and disposal, Water pollution control.

Dated: January 31, 1983

**Anne M. Gorsuch,**

*Administrator.*

### Appendix A—Abbreviations, Acronyms and Other Terms Used in This Notice

Act—The Clean Water Act

Agency—The U.S. Environmental Protection Agency
BAT—The best available technology economically achievable under Section 304(b)(2)(B) of the Act
BCT—The best conventional pollutant control technology, under Section 304(b)(4) of the Act
BDT—The best available demonstrated control technology processes, operating methods, or other alternatives, including where practicable, a standard permitting no discharge of pollutants under section 306(a)(1) of the Act
BMP—Best management practices under Section 304(e) of the Act
BPT—The best practicable control technology currently available under Section 304(b)(1) of the Act
Clean Water Act—The Federal Water Pollution Control Act Amendments of 1972 (33 U.S.C. 1251 *et seq.*), as amended by the Clean Water Act of 1977 (Pub. L. 95–217)
Direct discharger—A plant that discharges pollutants into water of the United States
Indirect discharger—A plant that introduces pollutrants into a publicly owned treatment works
NPDES permit—A National Pollutant Discharge Elimination System permit issued under Section 402 of the Act
NSPS—New source performance standards under Section 306 of the Act
POTW—Publicly owned treatment works
PSES—Pretreatment standards for existing sources of indirect discharges under Section 307(b) of the Act
PSNS—Pretreatment standards for new sources of direct discharges under Section 307 (b) and (c) of the Act
RCRA—Resource Conservation and Recovery Act (Pub. L. 94–580) of 1976, as amended

**Appendix B—Toxic Pollutants Not Detected**

(a) Subpart D—Canmaking Subcategory
001 Acenaphthene
002 Acrolein
003 Acrylonitrile
005 Benzidine
008 1,2,4-trichlorobenzene
009 Hexachlorobenzene
010 1,2-dichloroethane
012 Hexachloroethane
014 1,1,2-trichloroethane
015 1,1,2,2-tetrachloroethane
016 Chloroethane
017 [Deleted]
019 2-chloroethyl vinyl ether (mixed)
020 2-chloronaphthalene
021 2,4,6-trichlorophenol
022 Parachlorometa cresol
024 2-chlorophenol
025 1,2-dichlorobenzene
026 1,3-dichlorobenzene
027 1,4-dichlorobenzene
028 3,3-dichlorobenzidine
030 1,2-trans-dichloroethylene
031 2,4-dichlorophenol
032 1,2-dichloropropane
033 1,2-dichloropropylene (1,3-dichloropropene)
034 2,4-dimethyphenol
035 2,4-dinitrotoluene
036 2,6-dinitrotoluene
039 Fluoranthene
040 4-chlorophenyl phenyl ether
041 4-bromophenyl phenyl ether
042 Bis(2-chloroisopropyl) ether
043 Bis(2-chloroethyxy) methane
045 Methyl chloride (dichloromethane)
046 Methyl bromide (bromomethane)
047 Bromoform (tribromomethane)
049 [Deleted]
050 [Deleted]
052 Hexachlorobutadiene
053 Hexachloromyclopentadiene
054 Isophorone
056 Nitrobenzene
057 2-nitrophenol
058 4-nitrophenol
059 2,4-dinitrophenol
060 4,6-dinitro-o-cresol
061 N-nitrosodimethylamine
063 N-nitrosodi-n-propylamine
064 Pentachlorophenol
069 Di-N-octyl phthalate
073 Benzo(a)pyrene (3,4-benzopyrene)
074 3,4-Benzofluoranthene (benzo(b)fluoranthene)
075 11,12-benzofluoranthene (benzo(b)fluoranthene)
077 Acenaphthylene
079 1,12-benzoperylene (benzo(ghi)perylene)
082 1,2,5,6-dibenzanthracene dibenzo(,h)anthracene
083 Ideno (1,2,3-cd) pyrene (2,3-o-pheynylene pyrene)
084 Pyrene
088 Vinyl chloride (chloroethylene)
089 Aldrin
090 Dieldrin
094 4,4-DDD (p,p-TDE)
095 Alpha-endosulfan
096 Beta-endosulfan
099 Endrin aldehyde
105 Delta-BHC (PCB-polychlorinated biphenyls)
106 PCB-1242 (Arochlor 1242)
108 PCB-1221 (Arochlor 1221)
109 PCB-1232 (Arochlor 1232)
111 PCB-1260 (Arochlor 1260)
112 PCB-1016 (Arochlor 1016)
113 Toxaphene
114 Antimony
116 Asbestos
117 Beryllium
125 Selenium
126 Silver
127 Thallium
129 2,3,7,8-tetrachlorodibenzo-p-dioxin (TCDD)

**Appendix C—Toxic Pollutants Detected Below the Nominal Quantification Limit**

(a) Subpart D—Canmaking Subcategory.
004 Benzene
006 Carbon tetrachloride (tetrachloromethane)
007 Chlorobenzene
013 1,1-dichloroethane
023 Chloroform (trichloromethane)
037 1,2-diphenylhydrazine
038 Ethylbenzene
048 Dichlorobromomethane
051 Chlorodibromomethane
055 Naphthalene
062 N-nitrosodiphenylamine
065 Phenol
070 Diethyl phthalate
071 Dimethyl phthalate
072 1,2-benzanthracene (benzo(a)anthracene)
076 Chrysene
078 Anthracene
080 Fluorene
081 Phenanthrene
085 Tetrachloroethylene
087 Trichloroethylene
091 Chlordane (technical mixture and metabolites)
092 4,4-DDT
093 4,4-DDE (p,p-DDX)
097 Endosulfan sulfate
098 Endrin
100 Heptachlor
101 Heptachlor epoxide (BHC-hexachlorocyclohexane
102 Alpha-BHC
103 Beta-BHC
104 Gamma-BHC (lindane)
107 PCB–1254 (Arochlor 1254)
110 PCB–1248 (Arochlor 1248)

**Appendix D—Toxic Pollutants Not Treatable Using Technologies Considered Applicable to the Subcategory**

(a) Subpart D—Canmaking Subcategory.
115 Arsenic
118 Cadmium
120 Copper
121 Cyanide
122 Lead
123 Mercury
124 Nickel

**Appendix E—Toxic Pollutants Controlled at BPT, BAT and NSPS But Not Specifically Regulated**

(a) Subpart D—Canmaking Subcategory.
011 1,1,1-trichloroethane
018 Bis (2-chloroethyl) ether
029 1,1-dichloroethylene
044 Methylene chloride (dichloromethane)
066 Bis(2-ethylhexyll)phthalate
067 Butyl benzylphthalate
068 Di-N-butyl phthalate
086 Toluene

**Appendix F—Segments Not Regulated**

(a) The manufacture of seamed cans (clinched, soldered or welded).
(b) The manufacture of seamless cans from coated stock.
(c) The manufacture of can ends and can tops.

(Secs. 301, 304 (b), (c), (e), and (g), 306 (b) and (c), 307 (b) and (c), and 501 of the Clean Water Act (the Federal Water Pollution Control Act Amendments of 1972, as amended by the Clean Water Act of 1977) (the "Act"); 33 U.S.C. 1311, 1314 (b), (c), (e), and (g), 1316 (b) and (c), 1317 (b) and (c), and 1361; 86 Stat. 816, Pub. L. 92–500; 91 Stat. 1567, Pub. L. 95–217)

## PART 465—[AMENDED]

1. EPA proposes to amend the table of contents to 40 CFR Part 465 by adding a new subpart D to read as follows:

* * * * *

**Subpart D—Canmaking Subcategory**

Sec.
465.40 Applicability; description of the canmaking subcategory.

465.41 Effluent limitations representing the degree of effluent reduction attainable by the application of the best practicable control technology currently available.
465.42 Effluent limitations representing the degree of effluent reduction attainable by the application of the best available technology economically achievable.
465.53 New source performance standards.
465.54 Pretreatment standards for existing sources.
465.55 Pretreatment standards for new sources.
465.56 Effluent limitations representing the degree of effluent reduction attainable by the application of the best conventional pollutant control technology.

2. EPA proposes to revise § 465.01 to read as follows:

**§ 465.01 Applicability.**

This part applies to any coil coating facility or to any canmaking facility that discharges a pollutant to waters of the United States or that introduces pollutants to a publicly owned treatment works.

3. EPA proposes to amend § 465.02 by adding new paragraphs (h) and (i) to read as follows:

**§ 465.02 [Amended]**

* * * * *

(h) The term "can" means a container formed from sheet metal and consisting of a body and two ends or a body and a top.

(i) the term "canmaking" means the manufacturing process or processes used to manufacture a can from a basis metal.

4. EPA proposes to amend §465.03 by adding paragraphs (c) and (d) to read as follows:

**§ 465.03 [Amended]**

* * * * *

(c) As an alternative monitoring procedure for pretreatment, the POTW user may measure and limit oil and grease to the levels shown in pretreatment standards in lieu of measuring and regulating total toxic organics (TTO). The optional oil and grease parameter is not eligible for allowance for removal achieved at a POTW under 40 CFR 403.7.

(d) Aluminum is used as an indicator pollutant for toxic pollutants and a POTW may give credit for aluminum removal only to the extent that it is determined that chromium, zinc and other toxic metals are removed by the POTW.

5. EPA proposes to revise § 465.04 to read as follows:

**§ 465.04 Compliance date for PSES.**

(a) For Subparts A, B, and C the compliance date for Pretreatment Standards for Existing Sources (PSES) is December 1, 1985.[1]

(b) For Subpart D, the compliance date for Pretreatment Standards for Existing Sources will be three years from the date of promulgation of Subpart D.[1]

6. EPA proposes to add a new Subpart D to read as follows:

## Subpart D—Canmaking Subcategory

**§ 465.40 Applicability; description of the canmaking subcategory.**

This subpart applies to discharges to waters of the United States, and introductions of pollutants into publicly owned treatment works from the manufacturing of seamless can bodies, which are washed.

**§ 465.41 Effluent limitations representing the degree of effluent reduction attainable by the application of the best practicable control technology currently available.**

Except as provided in 40 CFR 125.30–.32, any existing point source subject to this subpart must achieve the following effluent limitations representing the degree of effluent reduction attainable by the application of the best practicable control technology currently available.

Subpart D

| Pollutant or pollutant property | BPT effluent limitations | |
|---|---|---|
| | Maximum for any 1 day | Maximum for monthly average |
| | g (lbs)/1,000,000 cans manufactured | |
| Cr | 74.21 (0.163) | 30.03 (0.066) |
| Zn | 235.01 (0.517) | 98.95 (0.217) |
| Al | 803.98 (1.768) | 328.66 (0.723) |
| F | 10513.65 (23.130) | 4664.88 (10.262) |
| P | 2950.89 (6.491) | 1206.86 (2.655) |
| O&G | 3534.00 (7.774) | 2120.40 (4.664) |
| TSS | 7244.70 (15.938) | 3534.00 (7.774) |
| pH | (1) | (1) |

[1]Within the range of 7.5 to 10 at all times.

**§ 465.42 Effluent limitations representing the degree of effluent reduction attainable by the application of the best available technology economically achievable.**

Except as provided in 40 CFR 125.30–.32, any existing point source subject to this subpart must achieve the following effluent limitations representing the degree of effluent reduction attainable by the application of the best available technology economically achievable:

Subpart D

| Pollutant or pollutant property | BAT effluent limitations | |
|---|---|---|
| | Maximum for any one day | Maximum for monthly average |
| | g (lbs)/1,000,000 cans manufactured | |
| Cr | 24.10 (0.053) | 9.75 (0.021) |
| Zn | 76.34 (0.167 | 32.14 (0.070) |
| Al | 261.17 (0.574) | 106.76 (0.234) |
| F | 3415.30 (7.513) | 1515.36 (3.333) |
| P | 958.58 (2.108) | 392.04 (0.862) |

**§ 465.43 New source performance standards.**

The following standards of performance establish the quantity of quality of pollutants or pollutant properties, controlled by this section, which may be discharged by a new source subject to the provisions of this subpart:

Subpart D

| Pollutant or pollutant property | NSPS effluent limitations | |
|---|---|---|
| | Maximum for any one day | Maximum for monthly average |
| | g (lbs)/1,000,000 cans manufactured | |
| Cr | 5.88 (0.013) | 2.38 (0.005) |
| Zn | 18.62 (0.041) | 4.84 (0.017) |
| Al | 63.7 (0.140) | 26.04 (0.57) |
| F | 833.0 (1.833) | 369.60 (0.813) |
| P | 233.8 (0.514) | 95.62 (0.210) |
| O&G | 280.0 (0.616) | 168.0 (0.370) |
| TSS | 574.0 (1.263) | 280.0 (0.616) |
| pH | (1) | (1) |

[1]Within the range of 7.5 to 10 at all times.

**§ 465.44 Pretreatment standards for existing sources.**

Except as provided in 40 CFR 403.7 and 403.13, any existing source subject to this subpart which introduces pollutants into a publicly owned treatment works must comply with 40 CFR Part 403 and achieve the following pretreatment standards for existing sources.

Subpart D

| Pollutant or pollutant property | PSES effluent limitations | |
|---|---|---|
| | Maximum for any one day | Maximum for monthly average |
| | kg (lbs)/1000,000 cans manufactured | |
| Cr | 24.10 (0.053) | 9.75 (0.021) |
| Zn | 76.34 (0.167) | 32.14 (0.070) |
| Al | 261.17 (0.574) | 106.76 (0.234) |
| F | 3415.30 (7.513) | 1515.36 (3.333) |
| P | 958.58 (2.108) | 392.04 (0.862) |
| TTO | 18.36 (0.040) | 8.61 (0.009) |
| O&G (for alternate monitoring) | 2353.0 (5.177) | 1148.0 (2.526) |

**§ 465.45 Pretreatment standards for new sources.**

Except as provided in § 403.7 any new source subject to this subpart which introduces pollutants into a publicly owned treatment works must comply

[1]The Consent Decree in *NRDC* v. *Train*, 12 ERC 1833 (D.C.C. 1979) specifies a compliance data for PSES of no later than June 30, 1984. EPA will be moving for modification of that provision of the Decree. Should the Court deny that motion, EPA will be required to modify this compliance date accordingly.

with 40 CFR Part 403 and achieve the following pretreatment standards for new sources.

Subpart D

| Pollutant or pollutant property | PSNS | |
|---|---|---|
| | Maximum for any one day | Maximum for monthly average |
| | g (lbs)/1000,000 cans manufactured | |
| CR | 5.88 (0.013) | 2.38 (0.005) |
| Az | 18.62 (0.041) | 7.84 (0.017) |
| Al | 63.7 (0.140) | 26.04 (0.057) |
| F | 833.0 (1.833) | 369.60 (0.813) |
| P | 233.8 (0.514) | 95.62 (0.210) |
| TTO | 4.48 (0.010) | 2.10 (0.005) |
| O&G (for alternate monitoring) | 280.0 (0.616) | 168.0 (0.616) |

**§ 465.46 Effluent limitations representing the degree of effluent reduction attainable by the application of the best conventional pollutant control technology.**

Except as provided in 40 CFR 125.30—.32, any existing point source subject to this subpart must achieve the following effluent limitations representing the degree of effluent reduction attainable by the application of the best conventional pollutant control technology:

Subpart D

| Pollutant or pollutant property | BCT effluent limitations | |
|---|---|---|
| | Maximum for any one day | Maximum for monthly average |
| | g (lbs)/1000,000 cans manufactured | |
| O&G | 1148.00 (2.526) | 688.80 (1.515) |
| TSS | 2353.4 (5.177) | 1148.00 (2.526) |
| pH | | |

Within the range of 7.5 to 10 at all times.

[FR Doc. 83-3194 Filed 2-9-83; 8:45 am]

BILLING CODE 6560-50-M

federal register

Thursday
February 10, 1983

# Part IV

# Department of Health and Human Services

## Social Security Administration

## Social Security Benefits and Supplemental Security Income; Payments for Vocational Rehabilitation Services; Final Rule

**DEPARTMENT OF HEALTH AND HUMAN SERVICES**

**Social Security Administration**

**20 CFR Parts 404 and 416**

## Social Security Benefits and Supplemental Security Income; Payments for Vocational Rehabilitation Services

**AGENCY:** Social Security Administration, HHS.

**ACTION:** Final rule.

**SUMMARY:** These regulations for providing payments for vocational rehabilitation (VR) services implement sections 2209 and 2344 of Pub. L. 97-35, the Omnibus Budget Reconciliation Act of 1981, which amend sections 222(d) and 1615(d) of the Social Security Act (the Act). The intent of these regulations is to give rehabilitation agencies an incentive to rehabilitate beneficiaries under titles II and XVI; to improve the cost effectiveness of the use of title II Trust Funds and title XVI general funds for rehabilitation of beneficiaries and, to that end, to limit payment for VR services to cases of successful rehabilitation attributable to VR agency involvement. The regulations provide for payment to the State VR agencies or alternate participants, on a case-by-case basis and subject to certain conditions, for each person successfully rehabilitated.

**EFFECTIVE DATES:** These rules will be effective February 10, 1983.

**FOR FURTHER INFORMATION CONTACT:** Harry J. Short, Office of Regulations, Social Security Administration, 6401 Security Boulevard, Baltimore, Md. 21235, telephone (301) 594-7337.

**SUPPLEMENTARY INFORMATION:** Before Pub. L. 97-35 was enacted, the Secretary was authorized to make available each year an amount not to exceed 1½ percent of the title II disability benefits paid from the Trust Funds in the preceding year, and under title XVI an appropriated amount from general funds, to cover the costs incurred by States in attempting to rehabilitate disabled title II beneficiaries and disabled or blind title XVI recipients. These funds were disbursed to the individual States by the Rehabilitation Services Administration (RSA), Department of Education, through its grant system, based on various allocation formulas. That arrangement is no longer appropriate, because Pub. L. 97-35 requires the Secretary of Health and Human Services to pay the States on a case-by-case basis, subject to conditions which require us to deal directly with the States. These regulations will serve as the basis for payment for successful vocational rehabilitation services.

In order to obtain the public's views and comments before proceeding with these amendments, we published proposed rules for making payment for successful vocational rehabilitation services along with a Notice of Proposed Rulemaking (NPRM) in the **Federal Register** on October 14, 1981 (46 FR 50756). Interested individuals, organizations, Government agencies, and groups were invited to submit data, views, or arguments pertaining to the proposed amendments within a period of 60 days from the date of publication of the notice. We have carefully considered all the comments we received pertaining to the proposed amendments and our decisions on the issues raised by the commenters are explained later in this preamble.

Beginning October 1, 1981, the rehabilitation of disabled persons under title II and disabled/blind persons under title XVI has not been financed in any major way from funds under title II or title XVI. Financing is primarily through funds appropriated to administer the basic rehabilitation grant program provided by the Rehabilitation Act of 1973. Pub. L. 97-35 authorizes the Secretary to pay the States from titles II and XVI funds only for the successful rehabilitation of title II beneficiaries and title XVI recipients as determined under criteria established by the Commissioner of Social Security. No payments can be made under these provisions for VR services provided prior to October 1, 1981.

### Regulatory Provisions

These regulations apply to the payment of the costs for successfully rehabilitating title II disability beneficiaries and title XVI disabled and blind recipients. They reflect and implement sections 2209 and 2344 of Pub. L. 97-35, the Omnibus Budget Reconciliation Act of 1981.

The regulations provide for a method of payment to the State VR agencies or alternate participants of the costs (subject to limitations set in these regulations) of services provided to persons who have performed substantial gainful activity (SGA) for a continuous period of not less than 9 months. By alternate participants we mean public or private agencies, organizations, institutions, or individuals, other than the State VR agencies, with whom the Commissioner of Social Security has entered into an agreement or contract to provide VR services.

The regulations require that each State notify us no later than the 60th day following publication of these regulations whether it intends to participate in the titles II and XVI VR programs. If a State is unwilling to participate, the regulations specify that the Commissioner may provide VR services by agreement or contract with other public or private agencies, organizations, institutions or individuals. We will contact each State in advance of the deadline to assure that all States are aware of the deadline. We currently are considering whether States that participate should also be required to achieve specified levels of performance and, if so, what levels of performance should be required.

The law provides that we may pay for the VR services either after they occur or in advance (based on expected payments), in which case we would adjust for overpayments or underpayments. These regulations provide that funds may be advanced based on the estimated costs of successes expected to occur in the FY in which the funds are advanced.

These regulations also provide the criteria SSA will use in determining whether VR significantly "contributed" to an individual's ability to engage in SGA for a continuous period. These criteria differentiate between two types of situations:

1. One in which an individual has completed a "continuous period" of SGA and has not medically recovered;
2. One in which an individual has completed a "continuous period" of SGA and has medically recovered before completion of that period.

In the first situation, if the individual's continuous period began one year or less after VR services ended, we will ordinarily consider that any VR services provided significantly contributed to a continuous period and potential savings. If the continuous period began more than one year after VR ended, our determination to pay for VR services will depend on whether the continuous period evolved from "transitional work" attributable to VR or, if it did not, whether it could have occurred without the VR having been provided.

In the second situation, we will assume that VR contributed to an individual's ability to engage in SGA if the individual's individualized written rehabilitation program (IWRP), or a similar document in the case of an alternate participant, included medical services and these services were initiated, coordinated, or provided by a State VR agency or alternate participant. Where medical recovery is

the basis for termination and VR services contributed only to the return to work, no payment for any of the VR services can ordinarily be made. This is because medical recovery, and the resulting savings to the Trust Funds or general fund, would have occurred regardless of whether these VR services were provided.

These regulations explain that we will consider an individual to have completed a "continuous period" of SGA if he or she worked at the SGA level for at least 9 consecutive months. There are two exceptions to this rule:

1. The individual performs 9 months of SGA within a 10 consecutive month period and has earnings during that period that meet or exceed our SGA requirements.

2. The individual performs 9 months of SGA within a 12 consecutive month period and the reason for not performing SGA in 2 or 3 of those months was due to circumstances beyond his or her control and unrelated to the impairment.

These regulations also provide the criteria to be used in determining the amount of payment in each case. Among these criteria are:

1. The cost to be paid must have been incurred while the individual was disabled;

2. The cost must not have been paid, or be payable, from a source other than the regular State VR Program.

3. Total payment in each case, including any prior payments related to earlier continuous periods of SGA made under these regulations, must not be so high as to preclude a "net savings". "Net savings" is the difference between the estimated savings to the Trust Funds (general revenues if title XVI), if disability benefits eventually terminate, and the total amount determined to be paid, or payable, to the State VR agency or alternate participant.

The regulations also provide for us to pay the States for administrative costs on a formula basis for the convenience of the States, because they now account for such costs on a formula basis. However, we will reconsider this arrangement after we gain more experience with the program, so as to determine whether it is cost effective.

The regulations stipulate that the States or alternate participants must file a claim for payment before SSA will consider paying them for any services.

The regulations provide procedures the States must follow if they wish to dispute a determination regarding (1) the impact of VR services on an individual's performance of a continuous period of SGA or (2) the amount of costs to be paid. The procedures for alternate participants will be specified in contracts negotiated with them.

The regulations provide for audit of the services and expenditures which were the basis for payment.

**Comments Received Following Publication of the Notice of Proposed Rulemaking**

We published proposed rules on payment of costs incurred by State VR agencies for successfully rehabilitating title II disability beneficiaries and title XVI disabled and blind recipients along with a Notice of Proposed Rulemaking on October 14, 1981 (46 FR 50756). We invited comments on the proposed rules and gave interested parties 60 days within which to submit comments. The comment period closed December 14, 1981. As part of our outreach effort, we also mailed copies of the proposed rules to State rehabilitation agencies, and various national organizations and advocacy groups active in the fields of disability and rehabilitation, and asked them for comments.

Over 80 letters were received. These included comments from State VR agencies, several other State agencies interested but not directly involved in VR, private VR agencies, and national organizations and special interest organizations active in the field of VR. We also received several letters from private individuals. A number of the letters dealt with operational or administrative issues, such as suggestions on the methods to be used to advance funds after FY 1982, and are not addressed here. We have been working with the Council of State Administrators of Vocational Rehabilitation on these as well as other operational and administrative policy issues raised and expect to resolve them through our joint meetings. For example, one of the operational policy issues we are working on deals with the processing of claims that are filed before the completion of 9 months of SGA. Because of the initial high volume of filings expected, we are considering denying these claims if less than a certain number of months of SGA are completed at the time of filing, or, as an alternative, at the time we examine the claims to determine whether they meet the requirements for payment. These denials will not prejudice later filing of claims in these cases.

For ease of comprehension and perspective, we have grouped the comments according to the issues raised. The comments and our responses are presented in the sequence of the regulations.

*General Provisions (Purpose, Scope, and Definitions)*

*Comments*—Two writers stated that this program was intended to accomplish two objectives: (1) To make VR services more readily available to disabled individuals receiving payments under title II and title XVI of the Social Security Act and (2) to ensure that savings accrue to the appropriate title II Trust Funds and title XVI general funds from successful rehabilitations. They indicated that only the second purpose was included in the proposed regulations and that the first purpose should also be included. Three writers questioned the definition of "medical recovery." Two indicated that the definition was silent as to when medical recovery will, or will not, be determined to have occurred. One stated that the definition did not specify whether the Social Security Administration or the State VR agency has the responsibility for determining if and when medical recovery has occurred. One writer suggested that a definition of the terms "waiting period" and "eligible" should be provided.

*Response*—Since both program objectives cited in Pub. L. 97-35 are important, we have included both in §§ 404.2101 and 416.2201 of the final regulations as recommended. We have expanded the definition of medical recovery in §§ 404.2103 and 416.2203 to specify (1) that medical recovery will be established when an individual is found not disabled in accordance with the applicable sections of the Act and (2) that the Commissioner of Social Security is responsible for making medical recovery decisions (see also §§ 404.2109(b) and 416.2209(b)). Medical recovery decisions will be made as a result of a continuing disability investigation performed by SSA as part of the continuing disability determination process and will also be used in determining payments for VR services.

As suggested, definitions of the terms "eligible" (§ 416.2203) and "waiting period" (§ 404.2103) have been added to the lists of definitions.

*Participation by States or Alternate Participants*

*Comments*—Several writers expressed concern that payments by SSA might be diverted to the State treasuries rather than be channeled to the State VR agencies. One basis for this concern was that, in the proposed regulations dealing with participation in the program by the States and also in the payment provisions, reference was

sometimes made to the term "State" rather than "State VR agency." This gave many writers the impression that our payments would be to the States and would, therefore, go into each State's General Revenue fund, rather than to its VR agency. Another common cause of concern expressed by State VR agencies on this issue was that use of the term "reimbursement" may cause the payment for VR services to be deposited by the State into its General Revenue Fund. This is because the term "reimbursement" can be interpreted to mean "refund" and, in many States, any refund for a prior year's expenditure is deposited into that State's General Revenue Fund, thus depriving the State VR agency of the direct use of that money. To ensure that any payments made for VR services to the VR agencies, recommendations were made that the regulations, when referring to payment, specifically refer to the State VR agency instead of the State and that the term "reimbursement" be changed to "payment", or some other term with a similar meaning. One commenter recommended that language should be included in the regulations to provide State VR agencies with the authority to treat the payment as current-year funds. Two writers recommended that the payments should be issued by the Rehabilitation Services Administration in the form of a grant to the States. Concern that the participating State VR agencies might not receive use of any of the payments by SSA was the most common concern expressed about this section.

The second most common concern was that the States and their VR agencies should have some options as to participation. For example, several States with more than one VR agency felt that they should have the option of restricting their participation to only one VR agency, if they wanted to do that. Other States felt there should be options for delaying the effective date of initial participation, and for participation by a State which has declined initial participation but later wants to change that decision. One writer felt that there should be an option for a State to participate through an agency other than the State VR agency (or agencies).

Four writers questioned the requirement that the State, rather than the VR agency, notify us of its decision to participate in the payment program. They also questioned the requirement that the authority of the person signing the notice of participation to act for the State must be verified by an opinion from the State's Attorney General. Two of the writers felt that notification by a State VR agency, instead of the State, was sufficient, and two felt that the requirement for the accompanying opinion by the State's Attorney General was unnecessary and should be deleted.

The lack of a specific provision for the use of alternate participants in section 1615(d) of the Social Security Act was questioned by four writers. They stated that this section, which contains the provisions for payment for successful VR services to disabled and blind Supplemental Security Income (SSI) recipients, makes no provision for alternate participants as does section 222(d) of the Act, which applies to payment for successful VR services provided to disabled Social Security beneficiaries. Therefore, they suggested that the reference to alternate participants in § 416.2204(d) of the SSI regulations be deleted. One writer stated that the date shown in § 416.2204(c) as "March 31, 1981," is incorrect and that it should be shown as "March 31, 1982." Finally, one writer stated that the parenthetical phrase "or demonstrated its unwillingness to participate" is vague and should be clarified or deleted.

*Response*—The term "State" was initially defined to include the VR agency and was used interchangeably with VR agency. However, to avoid confusion, we have changed the term to "State VR agency" wherever appropriate. We also have replaced the word "reimbursement" with "payment", wherever appropriate.

There is no authority in the law for us to adopt the writer's suggestion that we specify in these regulations that the State VR agencies may treat the payments for successful VR services as current-year funds, but there is nothing in these regulations which would prevent a State from taking this action on its own initiative. We also did not adopt the suggestion that payments for VR services be issued by the Rehabilitation Services Administration in the form of a grant. This program is not a grant program and specifically provides for us to make payment on a case-by-case basis. It would neither be consistent with program intent to provide a grant nor cost-effective to make payments through an intermediary.

We have adopted the suggestions made that there should be some participation options available to the States. To accomplish this we have revised paragraph (c) of §§ 404.2104 and 416.2204 to provide for several participation options. Under these options, States have the right to initially participate, delay participation to a later date, or limit participation to only one VR agency. Additionally, States may participate through a State agency other than a VR agency approved under the Rehabilitation Act of 1973, but only as an alternate participant. There is also provision for a State to participate that had initially declined participation but later decided to participate. However, in this situation, and in the situation where a State has delayed participation, the State may be prevented from participation if we have already entered into an agreement or contract with an alternate participant. Also, in these two situations, the States will only be paid for successes that occur after they have started participating.

The requirement in the regulations that the State, instead of the VR agency or agencies, must notify us of its intent regarding participation in the program has not been changed. The law gives the State, not an agency of the State, the option of participating or not participating. The State is responsible for its VR program and for making the decision regarding participation through its VR agencies. It can, of course, make this decision through a designee. This is why we retained the provision that the State's Attorney General verify the authority of the official who sent the notice to act for the State. This was done to assure that the State's participation has official sanction. To accommodate the States in this regard we did, however, modify this requirement by adding a provision in §§ 404.2104(b) and 416.2204(b) making the opinion unnecessary if the notice regarding participation is signed by a State Governor.

The suggestion that any references to alternate participants in § 416.2204(d) (redesignated as § 416.2204(f)) of the SSI regulations should be deleted because the law made no reference to alternate participants was not adopted. The Conference Report, House of Representatives Report No. 97–208, 97th Cong., 1st Sess., p. 988 (1981), dealing with this legislation indicates that the provisions of the law were to be applicable to both title II and title XVI of the Social Security Act. While section 1615(d) is silent in this respect, section 1633(a) gives the Secretary the authority to make administrative and other arrangements under title XVI in the same manner as they are made under title II. This is the basis for using alternate participants for title XVI in the same manner as they are used under title II.

The date "March 31, 1981" was incorrect and should have been March 31, 1982. However, because of the very

large number of comments received and the time required to carefully evaluate these comments, it was necessary to extend the notification deadline for the States. This deadline is now the 60th day after the publication date of these regulations. Furthermore, this section was modified to provide for participation options. As concerns the parenthetical phrase "(or demonstrated its unwillingness to participate)", we agree that this may be confusing in that it might imply a standard of performance is involved. We have, therefore, deleted this parenthetical phrase.

*Requirements for Payments*

*Comments*—Twelve writers recommended that the term "adequate documentation", as applied to services and cost-expenditures documentation, should be defined in the regulations. Many of these writers also recommended that it should not be required that adequate documentation be submitted with every claim at the time of filing. Instead, some provision should be made for maintaining the necessary documentation in the State VR agencies and making it available to SSA on a post-payment review basis. Concern was also expressed about the increased administrative burden that will occur in providing this documentation. One writer stated that §§ 404.2108(c) and 416.2208(c), which require that VR services must be provided under a plan for VR services approved under title I of the Rehabilitation Act of 1973, seem to only apply to State VR agencies and that a similar provision should be made for alternate participants.

*Response*—We have purposely avoided providing a detailed, all-inclusive definition of adequate documentation in the regulations because neither we, nor anyone else, have experience operating under the new definition of "successful" rehabilitation. Instead, we provided a conceptual basis for our assessment of the adequacy of documentation. We will propose modifications to these regulations if experience shows that we need to make changes in the documentation requirements. Further, we are working with the Council of State Administrators of Vocational Rehabilitation (CSAVR) in developing these guidelines and hope to establish guidelines which will be satisfactory to both SSA and the State VR agencies and alternate participants. However, to assure that the reporting burden is minimal, we have rewritten §§ 404.2108(f) and 416.2208(f) (previously §§ 404.2108(g) and 416.2208(g)) to minimize the amount of initial reporting and provide for reliance on post-payment review to identify problems in documentation. We agree with the comment that the language in §§ 404.2108(c) and 416.2208(c) seemed to set a standard for State VR agencies without a comparable standard for alternate participants. To correct this situation, we have added the phrase "or in the case of an alternate participant, under a negotiated plan" to the end of each of these sections. We have also made changes throughout the regulations to clearly specify when a particular section is also applicable, or inapplicable, to an alternate participant.

*Responsibility for Making Payment Decisions*

*Comments*—One writer recommended that some of the responsibility for decision making should be delegated by the Commissioner of Social Security to the regional representatives.

*Response*—The definition of Commissioner in these regulations includes his designees. We plan to use the Regional Commissioners, and any others the Commissioner may designate, in administering this program. However, there is no need for specific mention of these officials in the regulations. Based on the comments received on medical recovery as discussed earlier, we have added medical recovery to the list of items in §§ 404.2109 and 416.2209 that the Commissioner will determine. We have also added a provision to §§ 404.2127 and 416.2227 to explain that, because the decision of medical recovery is part of the disability claims process, no appeal of this decision is available under these regulations.

*What We Mean By "SGA" and by "A Continuous Period of 9 Months"*

*Comments*—Six writers suggested that provision should be made to pay for VR services even though a continuous period of 9 months of SGA is never completed. Seven writers recommended that the 12 consecutive month period described in §§ 404.2110(b)(2) and 416.2210(b)(2), during which a person must have performed SGA in 9 months should be lengthened. Recommendations for longer periods ranging from 18 to 24 months were received. Two writers suggested that the term "unrelated to the impairment", as used in this section, should be deleted so that impairment—related periods of non-SGA could be considered in establishing the 9 out of 12 requirements. Other writers thought that a provision should be made for seasonal workers who, because of the short growing and harvesting seasons for agricultural crops, might never be employed for more than 6 months out of a year. Two writers stated that, in order to make it easier to establish SGA, impairment-related work expenses should not be deducted, because the deduction of these expenses might keep an individual below the SGA level. Two writers recommended that we use a more liberal definition of "success" for blind SSI recipients than the definition we proposed. That is, instead of adopting the SGA standard that applies to blind title II beneficiaries, we should use the SGA standard that applies to disabled SSI recipients. (A choice exists because blind SSI recipients are not subject to an SGA standard for SSI benefit purposes, and we are required to apply a standard for VR payment purposes.)

*Response*—We could not adopt the suggestion that a provision be made to pay for VR services even though 9 months of SGA is never completed. The law requires that 9 months of SGA be completed before payment can be made. We did not increase to more than 12 months the time period for completion of 9 months of SGA to accommodate seasonal workers, nor did we eliminate the consideration of work related expenses in computing the SGA for all workers. In preparing the regulations we had considered making provision for a longer period in which to establish 9 months of SGA where circumstances beyond the individual's control prevented timely completion. However, we believe that there is no clear-cut authority for establishing a longer period and that a longer period would lower the potential for savings. Sections 223(d)(4) and 1614(a)(3)(D) of the Social Security Act provide for the deduction of impairment-related work expenses when determining if an individual's work constitutes SGA. We were therefore unable to adopt the suggestion that these expenses not be deducted when determining if an individual is performing SGA. We also did not make provision for including failure to perform SGA during this 12-month period, if such failure was due to a condition related to the individual's impairment. To do so, we believed, would not serve to establish that an individual was successfully rehabilitated.

Because there is no existing provision for SGA applicable to blind SSI recipients, it was necessary to adopt an SGA provision for the purpose of determining if the required 9 months of SGA have been completed by these individuals. In doing this, we considered adopting either the title II blind provision or, as recommended by the

commenter, the SSI disability provision for determining SGA for blind SSI recipients. Presently, under the SSI disability provisions, SGA generally is established based on monthly earnings of $300. Earnings of $500 a month establish SGA under the title II blind provisions. Use of the SSI disability provisions for SGA would make it easier, because of the lower earnings level, to establish months of SGA. However, this would create two different methods of determining month of SGA for blind individuals and would in some instances require the application of two standards to the same individual (some blind individuals receive benefits under both the title II and the SSI programs). Because of these factors and the fact that there is an existing formula designed specifically for determining SGA for blind workers, we believe it is appropriate to adopt the title II SGA standard for all blind individuals.

*Criteria for Determining When VR Services Will Be Considered To Have Contributed to a Continuous Period of 9 Months*

*Comments*—Twenty-four writers recommended that the State VR agencies or alternate participants should be paid for the cost of VR services provided to disability beneficiaries who were expected by us to medically recover (i.e., they were scheduled for a medical reexamination). Many of these writers also questioned how the cases in which medical recovery is expected could be identified by the State VR agencies or alternate participants. Most of the writers, in their recommendations, maintained that the presence or absence of a scheduled medical reexamination is irrelevant because only about 50 percent of the individuals for whom a reexamination is scheduled are found to have medically recovered. They further indicated that to deny payment of VR services solely on the basis of expected medical recovery would not be equitable because it does not deal with the real issue, which is whether VR services directly contributed to the medical recovery and return to SGA.

Five writers suggested that a presumption should be made that any VR services provided contributed to the continuous period of SGA. Five writers indicated that the State VR agencies or alternate participants do not have the equipment to track their clients' progress for up to five years after the vocational services ended. Some writers indicated that there should be a provision for payment for VR services when the continuous period began more than five years after the VR services ended. The meaning of the term "transitional work activity" was questioned by two writers. One writer questioned the meaning of the word "clear" as used in the last part of the last sentence in §§ 404.2111(a)(2) and 416.2211(a)(2) which states "if it is clear that the VR services contributed to the transitional work activity." One writer suggested that a provision should be made for interruptions in work activity in §§ 404.2111(a)(2) and 416.2211(a)(2). Several recommended that SSA pay for rehabilitation services which result in termination of the disability benefits without the client ever returning to work. Two writers commented that the language in §§ 404.2111(b)(1) and 416.2211(b)(1) seems to indicate that SSA will only pay the State VR agency or alternate participant for medical services.

One commenter requested that we clarify what we mean by VR services, i.e., indicate whether we would accept only State VR agency classified rehabilitations or also accept their non-rehabilitations.

*Response*—We have reviewed our position on the issue of expected medical recoveries and have decided that any payment for VR services in this situation should not be determined solely on the basis of whether we expected medical recovery to occur. This is because many expected recoveries might not occur without VR services. We agree that the determining factor should be whether the VR services provided directly contributed to the medical recovery. We have, therefore, deleted the requirement of the proposed §§ 404.2111(b)(1) and 416.2211(b)(1) that medical recovery must not have been expected to occur.

The recommendation that a presumption should be made that any VR services provided contributed to SGA for the continuous period was not adopted. The VR services must result in SGA. The connection between VR services and SGA must be established. We did not adopt this recommendation because we did not want to make any presumptions which might require us to pay for VR services which could not have helped an individual in returning to or continuing in SGA. We believe that the language used in §§ 404.2111(a)(1) and 416.2211(a)(1) will allow us to pay for most VR services provided an individual and, at the same time, prevent payment for any VR services which clearly could not have helped an individual in returning to or continuing in SGA. As we gain experience in administering this program, however, we may reconsider this recommendation.

The anticipated problem of tracking a client's progress for up to five years after VR services ended is an administrative or operational issue and, as such, need not be covered by these regulations. The regulations allow for payment in cases where individuals do not return to work at the time of rehabilitation. Each State and alternate participant will have to decide how long it will track rehabilitants for work activity that might justify payment.

We have adopted the recommendation that there should be a provision made for payment for VR services provided when the continuous period of SGA began more than 5 years after the VR services were provided. To accomplish this, we have deleted the proposed 5 year limitation. However, we believe that the greater the time period between the end of VR services and the completion of 9 months of SGA, the more tenuous the connection between the VR services and the completion of 9 months of SGA becomes. Where that time period exceeds 5 years, we will consider the connection only remotely possible and proven only with the most convincing evidence.

We have included in the definition of transitional work activity in §§ 404.2111(a)(2) and 416.2211(a)(2) a provision for periodic work interruptions as recommended. We have also deleted the phrase "if it is clear that VR services contributed to the transitional work activity" and replaced it with the phrase "if any services provided significantly motivated or assisted the individual in returning to or continuing in SGA."

It is not possible to adopt the recommendation that we pay for rehabilitation services which resulted in termination of the disability benefits without the client ever returning to work. The law requires SGA for the continuous period of 9 months before a claim for payment for VR services can be paid.

We clarified the meaning of VR services, indicating that we will pay the VR agency for any VR services which contributed to 9 months of SGA, regardless of whether the VR agency classified the individual as rehabilitated or not rehabilitated for other purposes.

*Services for Which Payment May Be Made*

*Comments*—Two writers suggested that §§ 404.2112 and 416.2212 were too complicated and should be revised. In addition, the applicability of title I of the Rehabilitation Act of 1973 to services provided by alternate participants was again questioned. One writer wanted to know if alternate participants would be

required to provide VR services under an individualized written rehabilitation plan (IWRP), or if a similar document would be used.

*Response*—While we do not believe that these sections are too complicated, we do agree that the questions raised regarding the applicability of the Rehabilitation Act of 1973 to alternated participants and the use of IWRP's by alternate participants need to be answered. To accomplish this, we have revised §§ 404.2112 and 416.2212 to indicate that services provided by a State VR agency must be in accordance with title I of the Rehabilitation Act of 1973, and services provided by an alternate participant must be provided in accordance with a negotiated plan which will contain service provisions similar to those applicable to the State VR agencies. We have also made changes to specify that the VR services provided under an IWRP refers to VR services provided by a State VR agency. A document comparable to the IWRP may be used for services provided by alternate participants. This will be subject to a negotiated plan.

*When Services Must Have Been Provided*

*Comments*—Several writers expressed concern with the SSI provision in § 416.2213(b) of the NPRM which allows payment for VR services provided only during months an individual is eligible for SSI payments. Their main concern was that, in situations where an individual is frequently in and out of eligiblity status (e.g., due to excess income or resources, engaging in SGA, etc.), an unnecessary burden will be imposed on the State VR agencies and alternate participants. They believe it would be very difficult to track on a current basis which months an individual was actually receiving SSI benefits. They also think that it may cause some State VR agencies or alternate participants to delay providing VR services until an individual is again receiving SSI benefits. They recommended that it would be better if months in which no SSI benefits were paid were disregarded in determining payment for any VR services provided.

One writer wanted to know how the period in which services must have been provided would be determined where an individual received both a title II disability benefit and an SSI disability payment.

Another writer questioned how the provisions regarding when services must have been provided (§§ 404.2113 and 416.2213) would apply to §§ 404.2108 and 416.2208 (Requirements for payment). This writer stated that the sections listing requirements for payment only require that services be provided (1) on or after October 1, 1981 (§§ 404.2108(b) and 416.2208(b) of the NPRM), and (2) during months the individual was entitled to benefits (§ 404.2108(d) of the NPRM) or eligible for benefits (§ 416.2208(d) of the NPRM). They do not cover any of the other provisions in §§ 404.2113 or 416.2213 on when services must have been provided, such as before completion of a continuous period of SGA. For example, if a continuous period of SGA were completed before October 1, 1981, and SSA disability entitlement continued, a State VR agency or alternate participant could meet all the requirements for payment specified in §§ 404.2108 or 416.2208 and still not be paid because VR services must also have been provided before the end of a continuous period of SGA in order to be payable. Therefore, if the continuous period ended before October 1, 1981, no payment for VR services could be made.

*Response*—Section 1615 of the Social Security Act requires that an individual be receiving benefits during the period any VR services are provided in order for the cost of those services to be payable. Therefore, we cannot pay for any VR services provided during a month an individual was not actually receiving benefits. We have also defined the word "eligible" in § 416.2203 to emphasize further this requirement of the law.

We have added a provision to §§ 404.2113 and 416.2213 to allow, where an individual is entitled to a title II disability benefit and is also receiving an SSI disability or blindness payment, for computing the period when services must have been provided under the provisions of either § 404.2113 or 416.2213, whichever is advantageous to the State VR agency or alternate participant. For example, in a situation where an individual filed for both benefits in the same month, it may be advantageous to compute the period when VR services must have been provided by using the provisions in § 404.2113. This is because, under § 404.2113, the period in which services must have been provided can begin with the first month of the waiting period. A waiting period can begin as early as 17 months before an application is filed in title II disability insurance claims. However, because there is no waiting period in an SSI claim, the period in which services must have been provided begins with the first month that the individual is receiving SSI payments. There is no retroactivity to a claim for SSI payments and the earliest possible date that this payment can begin is the day the claim is filed. Therefore, if claims for both benefits were filed in the same month, it would probably be advantageous to compute the period when services must have been provided under the title II disability insurance provisions in § 404.2113, because up to 17 more months of VR services could be considered. It would also be advantageous to use the title II disability insurance provisions in these, or similar, situations because it would not be necessary to determine the months of ineligibility due to income and resources limitations, etc., which would apply to the SSI disability or blindness recipient.

Based on the questions raised about the effect of §§ 404.2113 and 416.2213 on §§ 404.2108 and 416.2208 (Requirements for payment), we have changed §§ 404.2108(b) and 416.2208(b) to require that the VR services must have been provided during the period specified in §§ 404.2113 and 416.2213 instead of "on or after October 1, 1981", as originally indicated. We have also deleted §§ 404.2108(d) and 416.2208(d), which specified that VR services must have been provided during months the disabled individual was entitled to title II disability insurance benefits or receiving SSI payments. (This requirement is still in effect, however, it is now included as part of §§ 404.2108(a) and 416.2208(a).) Because of similar concerns, we have also changed the requirement in §§ 404.2108(g) and 416.2208(g) that a cost be reasonable and necessary, to specify that such a cost must be in compliance with the other cost guidelines in §§ 404.2116 and 416.2216.

*What Costs Will Be Paid*

*Comments*—A total of 28 writers stated that compliance with the provisions of this section would greatly add to the administrative burden of the State VR agencies and alternate participants. The primary concern of 12 of these writers was that they did not feel it should be necessary for us to apply cost-containment standards, because existing state internal cost-containment controls are adequate to prevent any unreasonable or unnecessary costs from being incurred. Other writers stated that at the time most VR costs are incurred, it is not known if the VR services being provided will result in a successful rehabilitation of an individual under our criteria. Therefore, there would be no reason for incurring any unreasonable or unnecessary costs which the State VR agency or alternate participant might have to pay out of its own budget.

Another recommendation, made by five writers, for lessening the administrative burden on the State VR agencies and alternate participants, was that we should consider all services provided by a State VR agency under an IWRP, or by an alternate participant under a similar document, to have been necessary.

Three writers commented that the reference to the "similar benefit" provision in 45 CFR 1361.45(b) made in §§ 404.2116(b) and 416.2216(b) is incorrect. They stated that this is now a Department of Education regulation and that the new regulation is in 34 CFR 361.47(b). Also, one writer requested that this section of the regulations be clarified and another suggested that it be deleted. The basis for both the recommendations was that the time and effort involved to comply with the "similar benefits" provision would often offset any savings.

Three writers recommended that §§ 404.2116(d) and 416.2216(d), which cover maintenance payments made to individuals who are required to be away from home in order to receive VR services, should be deleted. The basis for this recommendation was that maintenance payments are made only when, in the judgment of the counselor, an individual needs the payment to pursue other VR services necessary for employment. Two writers suggested that administrative and counseling costs be clearly defined.

Another writer suggested that the section on administrative costs be rescinded because it may lead to abuses (no examples were provided) in the selection process. Four writers recommended that there be some provision for a bonus or special placement fee to cover the inflation and interest losses on money used by the State VR agencies and alternate participants to provide VR services. One writer recommended that any payments made for VR services in any previous 9-month continuous period of SGA should not be considered in determining whether a net savings will accrue from the most recent program of VR services resulting in SGA. Several writers questioned the meaning of the payment condition whereby we will compare potential savings to costs before making payment.

*Response*—We agree with the recommendations made for easing the administrative burdens anticipated by the implementation of this program. To incorporate the recommendation that the State's internal cost-containment standards be used instead of those proposed, we have revised §§ 404.2116(c) and 416.2216(c). These sections now provide that a cost will be considered reasonable if it is consistent with a State's internal cost-containment guidelines or, in the case of an alternate participant, if it is consistent with a negotiated cost-containment policy. We have also made provision in this section that all services performed by a State VR agency in accordance with an IWRP, or a similar document in the case of an alternate participant, will be considered necessary. In addition, as covered earlier in discussing adequate documentation, we are also working with the Council of State Administrators of Vocational Rehabilitation (CSAVR) in developing operational procedures which we hope will further improve the administrative reporting requirements.

The reference to 45 CFR 1361.45 in §§ 404.2116(b) and 416.2216(b) has been changed to 34 CFR 361.47(b). We did not, however, adopt the recommendation that this section be deleted. Other sources (e.g., Medicare) of funding should be considered if they are available. We did, however, decide to consider the availability of similar benefits as a post-payment review issue subject to necessary adjustments for overpayments in order not to offset savings. We adopted the recommendation and reasoning that §§ 404.2116(d) and 416.2216(d), which deal with maintenance payments, be deleted.

For the reasons discussed previously in responding to the request for a definition of the term "adequate documentation," we did not adopt the suggestion that administrative costs as used in §§ 404.2116(f) and 416.2216(f) should be defined. We also believe that the meaning of these costs is already generally understood. We did not rescind these sections because we believe the post-payment reviews contemplated will provide adequate safeguards. The recommendation that a special fee or bonus should be paid for VR services provided by a State VR agency or alternate participant to offset the loss due to inflation or loss of interest on money spent by them for these services could not legally be adopted. The law does not authorize a bonus. However, the provision for advance funding and the steps taken to expedite payments for VR services should help to prevent some losses.

We clarified the payment condition calling for us to make a pre-payment estimate of savings before paying the State VR agency's or alternate participant's claim. We plan to employ the same formula which the States used under the prior programs.

We did not adopt the recommendation that prior payments, made to a State VR agency or alternate participant for an earlier continuous period of SGA, should not be counted in computing the savings to the Trust Funds for a later continuous period of SGA. We do not have the authority to waive the counting of actual expenditures.

*Administrative Provisions*

*Comments*—Forty-seven writers, for various reasons, recommended that there should be some advance funding for FY 1982 and that §§ 404.2118(a) and 416.2218(a), which did not allow advance funding for fiscal year 1982, should be deleted.

Three writers felt that the policies and procedures applicable to alternate participants should be clarified. One writer wanted to know where the statutes and regulations applicable to disputes and appeals of audit determinations will be specified for alternate participants.

*Response*—The need for advance funding for fiscal year 1982 was the most frequent comment received concerning these regulations. We initially intended not to advance fund the program. Our concern was that without sufficient experience with the new definition of "success"—9 months of SGA—State agencies would risk overpayment if the "successes" did not materialize. However, States have indicated a willingness to accept that risk and recognize that we will make future adjustments to account for any underpayments or overpayments. We are, therefore, prepared to make advances of the funds for which we have obligational authority. An advance to a State VR agency in a given fiscal year will be toward the rehabilitation successes the State VR agency is expected to achieve in that year and will be based on the expected costs of those successes. We have, therefore, deleted paragraph (a) of §§ 404.2118 and 416.2218 of the proposed regulations, which provided that no funds would be advanced for use in FY 1982. Sections 404.2118 and 416.2218, as revised, now provide for advance funding for FY 1982 as well as subsequent fiscal years.

In general, the provisions contained in these regulations are also applicable to the alternate participants. Where the provisions differ, we have explained the alternate participant's responsibilities separately. Sections 404.2117(b) and 416.2217(b) have been changed to show that the statutes and regulations applicable to disputes, and appeals of audits, will be specified in the negotiated agreement or contract with the alternate participant. Generally, we expect that most disputes and appeals of audit determinations will be resolved

in accordance with the Contract Disputes Act of 1978, 41 U.S.C. 601, et seq. and regulations thereunder, unless otherwise specified in the negotiated agreement or contract.

Due to the adoption of the recommendation that a provision should be made for post-payment reviews of VR services provided and costs incurred, it was necessary to add a special provision for this review. Sections 404.2121 and 416.2221 (post-payment reviews and validations) were, therefore, added to these regulations.

### Additional Changes

The time limit for requesting reconsideration of a payment or audit determination (§§ 404.2120(c), 404.2127(a), 416.2220(c) and 416.2227(a)) has been extended from 30 days from the date of our determination notice to 60 days after receipt of our determination notice. We made this change in order to provide the State VR agencies and alternate participants with more time for reviewing and documenting any appeals they may need to file.

For accounting purposes and to expedite payments to State VR Agencies and alternate participants, we have added a time limitation for filing a claim for payment to §§ 404.2108(a) and 416.2208(a). A claim for payment must be filed within 12 months after the month the continuous period of SGA is completed or, if later, within 12 months after the month of publication of these regulations.

We amended paragraph (a) of § 416.1710 to remove the reference to an agency administering services under the State plan for crippled children's services and have provided instead for referral of blind and disabled children under age 16 to an agency administering services under the Maternal and Child Health Services Block Grant Act. This is merely a technical change and conforms this regulation section to a change made to title V (now called Maternal and Child Health Services Block Grant) of the Social Security Act by section 2193 of Pub. L. 97-35, 95 Stat. 827 (the Omnibus Budget Reconciliation Act of 1981).

### Executive Order 12291 and Regulatory Flexibility Act

We proposed in the spring of last year that Congress terminate the titles II and XVI VR programs effective with FY 1982 and eliminate all VR funding under the Social Security Act. Congress terminated those programs as recommended, but replaced them with two programs requiring funding of VR under the Social Security Act far below the level of the prior programs. These programs are the subject of these regulations. Therefore, cost reductions from the abolition and replacement of the old programs, although major, are due to decisions made in the legislative and budgetary process. Cost impacts directly resulting from the regulations themselves are minor. For this reason, the Secretary has determined that the regulations do not meet any of the criteria for a major rule under Executive Order 12291. Further, the regulations will not have a significant economic impact on a substantial number of small entities, and do not require a regulatory flexibility analysis as provided in Public Law 96-345, the Regulatory Flexibility Act of 1980.

### Paperwork Reduction Act

The Department is required to submit to the Office of Management and Budget (OMB) for review and approval §§ 404.2108(a) and 416.2208(a) of the regulations which deal with reporting requirements. These sections require States (or alternate participants) to file a claim to receive payment. The reporting or recordkeeping provisions that are included in this regulation have been approved by OMB (OMB No. 096-0310).

These regulations are hereby adopted as set forth below.

(Catalog of Federal Domestic Assistance Program No. 84.126, Rehabilitation Services and Facilities—Basic Support)

### List of Subjects in 20 CFR Part 404

Administrative practice and procedure, Death benefits, Disabled, Old-Age, Survivors and Disability Insurance.

### List of Subjects in 20 CFR Part 416

Administrative practice and procedure, Aged, Blind, Disabled, Public assistance programs, Supplemental Security Income (SSI).

Dated: November 18, 1982.

**John A. Svahn,**

*Commissioner of Social Security.*

Approved: January 19, 1983.

**Richard S. Schweiker,**

*Secretary of Health and Human Services.*

## PART 404—FEDERAL OLD-AGE, SURVIVORS, AND DISABILITY INSURANCE (1950 )

Part 404 of Chapter III of Title 20 of the Code of Federal Regulations is amended as follows:

1. A new Subpart V is added to Part 404 to read as follows:

### Subpart V—Payments for Successful Vocational Rehabilitation Services

**General Provisions**

Sec.
404.2101 General.
404.2102 Purpose and scope.
404.2103 Definitions.
404.2104 Participation by State VR agencies or alternate participants.

**Payment Provisions**

404.2108 Requirements for payment.
404.2109 Responsibility for making payment decisions.
404.2110 What we mean by "SGA" and by "a continuous period of 9 months".
404.2111 Criteria for determining when VR will be considered to have contributed to a continuous period of 9 months.
404.2112 Services for which payment may be made.
404.2113 When services must have been provided.
404.2116 What costs will be paid.

**Administrative Provisions**

404.2117 Applicability of these provisions to alternate participants.
404.2118 Method of payment.
404.2120 Audits.
404.2121 Post-payment reviews and validations.
404.2122 Confidentiality of information and records.
404.2123 Other Federal laws and regulations.
404.2127 Resolution of disputes.

**Authority:** Issued under secs. 205, 222, and 1102 of the Social Security Act; 49 Stat. 624, 68 Stat. 1082, 49 Stat. 647; 42 U.S.C. 405, 422, and 1302; Sec. 2209 of Pub. L. 97-35; 95 Stat. 840; 42 U.S.C. 422.

### Subpart V—Payments for Successful Vocational Rehabilitation Services

**General Provisions**

**§ 404.2101 General.**

Section 222(d) of the Social Security Act authorizes the transfer from the Federal Old-Age and Survivors Insurance Trust Fund and the Federal Disability Insurance Trust Fund of such sums as may be necessary to pay for the reasonable and necessary costs of vocational rehabilitation (VR) services which result in disabled individuals entitled under sections 223, 202(d), 202(e) and 202(f) of the Social Security Act performing substantial gainful activity (SGA) for a continuous period of at least 9 months. The purpose is to make VR services more readily available to disabled individuals and ensure that savings accrue to the Federal Old-Age and Survivors Insurance Trust Fund and the Federal Disability Insurance Trust Fund.

**§ 404.2102 Purpose and scope.**

This subpart describes the rules under which the Secretary will pay the State VR agencies or alternate participants for VR services which result in an individual's performance of SGA for a continuous period of at least 9 months. It also provides the criteria for determining whether VR services furnished to the individual significantly contributed to his or her successful performance of SGA and the amount of the State VR agency's or alternate participant's costs that will be paid.

(a) Sections 404.2101–404.2103 describe the purpose of these regulations and the meaning of terms we frequently use in them.

(b) Sections 404.2104 describes the requirement that States declare their intent to participate or not participate.

(c) Sections 404.2108–404.2109 describe the requirements and conditions under which we will pay a State VR agency or alternate participant under this subpart.

(d) Sections 404.2110–404.2111 describe when an individual has completed a continuous period of SGA and when VR will be considered to have contributed to that period.

(e) Sections 404.2112–404.2113 describe services for which payment will be made.

(f) Section 404.2116 describes the payment conditions.

(g) Section 404.2117 describes the applicability of these regulations to alternate participants.

(h) Section 404.2118 describes how we will make payment to State VR agencies or alternate participants for successful rehabilitation services.

(i) Sections 404.2120 and 404.2121 describe the audits and post-payment reviews and validations that we will make.

(j) Section 404.2122 discusses confidentiality of information and records.

(k) Section 404.2123 provides for the applicability of other Federal laws and regulations.

(l) Section 404.2127 provides for the resolution of disputes.

**§ 404.2103 Definitions.**

For purposes of this subpart:

"Act" means the Social Security Act, as amended.

"Alternate participants" means any public or private agencies (except participating State VR agencies (see § 404.2104)), organizations, institutions, or individuals with whom the Commissioner has entered into an agreement or contract to provide VR services.

"Commissioner" means the Commissioner of Social Security or the Commissioner's designee.

"Disability" means "disability" or "blindness" as defined in sections 216(i) and 223 of the Act.

"Disability beneficiary" means a disabled individual who is entitled to benefits under sections 223, 202(d), 202(e), or 202(f) of the Act.

"Medical recovery" for purposes of this subpart is established when a beneficiary's disability entitlement ceases for any medical reason (other than death). The determination of medical recovery is made by the Commissioner in deciding a beneficiary's continuing entitlement to benefits.

"Secretary" means the Secretary of the Department of Health and Human Services or the Secretary's designee.

"SGA" means substantial gainful activity performed by an individual as defined in §§ 404.1571–404.1575 or 404.1584 of this subpart.

"State" means any of the 50 States of the United States, the Commonwealth of Puerto Rico, the District of Columbia, the Virgin Islands, or Guam. It includes the State VR agency.

"Trust Funds" means the Federal Old-Age and Survivors Insurance Trust Fund and the Federal Disability Insurance Trust Fund.

"Vocational rehabilitation services" has the meaning assigned to it under title I of the Rehabilitation Act of 1973.

"VR agency" means an agency of the State which has been designated by the State to provide vocational rehabilitation services under title I of the Rehabilitation Act of 1973.

"Waiting period" means a five consecutive calendar month period throughout which an individual must be under a disability and which must be served before disability benefits can be paid (see § 404.315(d)).

"We", "us" and "our" refer to the Social Security Administration (SSA) or the Secretary, as appropriate.

**§ 404.2104 Participation by State VR agencies or alternate participants.**

(a) In order to participate through its VR agency (or agencies), a State must have a plan which meets the requirements of title I of the Rehabilitation Act of 1973; or in the case of an alternate participant, a similar plan.

(b) *State decision.* The option of participation through their VR agencies in the payment program covered by this regulation will be offered first to the States. Each State must notify the Regional Commissioner (SSA) in writing no later than the 60th day following publication of these regulations whether its VR agency (or agencies) will participate in the program. The notice must be from an official authorized to act for the State for this purpose. A State must provide an opinion from the State's Attorney General verifying the authority of the official who sent the notice to act for the State. This opinion will not be necessary if the notice is signed by a State governor.

(c) *Participation options.* (1) A State that decides not to participate initially may participate later if we have not already made a commitment to an alternate participant, or if we choose to supplement an alternate's participation by also using a State VR agency. In such cases, the State VR agency may participate under the same conditions as described for initial State VR agency participation, except that payments will be limited to successes that occur after we accept the State's offer of participation.

(2) If a State decides to participate by using a State agency other than a VR agency with a plan for VR services approved under the Rehabilitation Act of 1973, that State agency may participate only as an alternate participant.

(3) A State with one or more approved VR agencies may limit participation of those agencies. For example, a State with separate VR agencies for the blind and disabled may choose to limit participation to the agency for the blind. We would seek an alternate participant for non-blind disabled beneficiaries.

(4) Unless otherwise specified by the State, a notice of initial participation will be effective October 1, 1981. A State may specify a later effective date, but in such cases, we may arrange for services to be provided through an alternate participant, either on an interim basis, as a replacement of the State VR agency, or as a supplement to the State VR agency. If a State does not want its participation to be effective October 1, 1981, payments will be limited to successes occurring on or after the effective date for participation it chooses after October 1, 1981.

(d) *Unwillingness of a State to participate.* The Commissioner will declare a State unwilling to participate if—

(1) The State has notified us that it does not intend to participate through its VR agency or agencies (see (c)(3) of this section for limited participation); or

(2) The State fails to notify us by the date specified in paragraph (b) of this section of its intent to participate.

(e) *Termination or limitation of participation after initial participation.*

If a participating State subsequently decides to terminate or limit participation, a notice to that effect must be made in writing to the Regional Commissioner (SSA) at least 90 days prior to effectuation. (Exception: States notifying SSA prior to publication of these regulations that they will participate may terminate participation without advance notice any time up to 30 days following publication of these regulations by a written notice to the Regional Commissioner.) A notice to terminate or limit participation must be submitted by an individual authorized to act for the State as specified in § 404.2104(b).

(f) *Alternate participants.* If a State has decided not to participate in the program through its VR agency, we may arrange for VR services in that State through an alternate participant by agreement or contract.

**Payment Provisions**

**§ 404.2108 Requirements for payment.**

(a) The State VR agency or alternate participant must file a claim for payment in each individual case within 12 months after the month in which the continuous period of SGA is completed or, if later, within 12 months after the month of publication of these regulations;

(b) The VR services for which payment is being requested must have been provided during the period specified in § 404.2113;

(c) The services must have been provided under a State plan for VR services approved under title I of the Rehabilitation Act of 1973 or, in the case of an alternate participant, under a negotiated plan;

(d) The individual must have performed SGA for a continuous period of at least 9 months (see §404.2110);

(e) The VR services must have contributed to the individual's return to SGA for a continuous period of at least 9 months (see § 404.2111);

(f) The State VR agency or alternate participant must provide, or maintain for post-payment review, adequate documentation of services and costs; and

(g) The amount to be paid must be reasonable and necessary and be in compliance with the cost guidelines specified in § 404.2116.

**§ 404.2109 Responsibility for making payment decisions.**

The Commissioner will decide:

(a) Whether a continuous period of 9 months of SGA has been completed;

(b) If and when medical recovery has occurred;

(c) Whether documentation of VR services and expenditures is adequate;

(d) Whether the VR services contributed to the continuous period of SGA; and

(e) What VR costs were reasonable and necessary and will be paid.

**§ 404.2110 What we mean by "SGA" and by "a continuous period of 9 months".**

(a) *What we mean by "SGA".* In determining whether an individual's work is SGA, we will follow the rules in §§ 404.1572–404.1575. We will follow these same rules for individuals who are statutorily blind, but we will evaluate the earnings in accordance with the rules in § 404.1584(d).

(b) *What we mean by "a continuous period of 9 months".* A continuous period of 9 months ordinarily means a period of 9 consecutive calendar months. Exception: When an individual does not perform SGA in 9 consecutive calendar months, he or she will be considered to have done so if—

(1) The individual performs 9 months of SGA within 10 consecutive months and has monthly earnings that meet or exceed the guidelines in § 404.1574(b)(2), or § 404.1584(d) if the individual is statutorily blind; or

(2) The individual performs at least 9 months of SGA within 12 consecutive months, and the reason for not performing SGA in 2 or 3 of those months was due to circumstances beyond his or her control and unrelated to the impairment (e.g., the employer closed down for 3 months).

(c) *What work we consider.* In determining if a continuous period of SGA has been completed, all of an individual's work activity may be evaluated for purposes of this section, including work performed before October 1981, during the waiting period, during the trial work period and after entitlement to disability benefits terminated. We will ordinarily consider only the first 9 months of SGA that occur. The exception will be if an individual who completed 9 months of SGA later stops performing SGA, receives VR services and then performs SGA for a 9-month period. See § 404.2113 of the use of the continuous period in determining payment for VR services.

**§ 404.2111 Criteria for determining when VR services will be considered to have contributed to a continuous period of 9 months.**

The following criteria apply to individuals who received more than just evaluation services. If a State VR agency or alternate participant claims payment for services to an individual who received only evaluation services, it must establish that the individual's continuous period or medical recovery (if medical recovery occurred before completion of a continuous period) would not have occurred without the services provided. In applying the criteria below, we will consider all services initiated, coordinated or provided, including services before October 1, 1981.

(a) *Continuous period without medical recovery.* If an individual who has completed a "continuous period" of SGA has not medically recovered as of the date of completion of the period, the determination as to whether VR services contributed will depend on whether the continuous period began one year or less after VR services ended or more than one year after VR services ended.

(1) *One year or less.* Any VR services which might have significantly motivated or assisted the individual in returning to, or continuing in, SGA will be considered to have significantly contributed to the continuous period.

(2) *More than one year.*—(i) If the continuous period was preceded by transitional work activity (employment or self-employment which gradually evolved, with or without periodic interruptions, into SGA), and that work activity began less than a year after VR services ended, VR services will be considered to have contributed to the continuous period if any services provided significantly motivated or assisted the individual in returning to or continuing in SGA.

(ii) If the continuous period was not preceded by transitional work activity that began less than a year after VR services ended, VR services will be considered to have contributed to the continuous period only if it is reasonable to conclude that the work activity which constitutes a continuous period could not have occurred without the VR services (e.g., training) the State VR agency or alternate participant provided.

(b) *Continuous period with medical recovery occurring before completion.* (1) If an individual medically recovers before a continuous period has been completed, the cost of VR services provided will not be payable unless some services contributed to the medical recovery. VR will be considered to have contributed to the medical recovery if—

(i) The individualized written rehabilitation program (IWRP) or, in the case of an alternate participant, a similar document, included medical services; and

(ii) The medical recovery occurred, at least in part, because of these medical services. (For example, the individual's

medical recovery was based on improvement in a back condition which, at least in part, stemmed from surgery initiated, coordinated or provided under an IWRP).

(2) In some instances, the State VR agency or alternate participant will not have provided, initiated, or coordinated medical services. If this happens, payment for VR services may still be possible under paragraph (a) of this section if: (i) the medical recovery was not expected by us; and (ii) the individual's impairment is determined by us to be of such a nature that any medical services provided would not ordinarily have resulted in, or contributed to, the medical cessation.

**§ 404.2112 Services for which payment may be made.**

Payment may be made for all services provided by a State VR agency in accordance with title I of the Rehabilitation Act of 1973, or by an alternate participant in accordance with a negotiated plan, subject to the conditions and limitations of this subpart. This includes general diagnostic and evaluation services provided to determine eligibility for VR services and all services provided by a State VR agency under an IWRP, or under a similar document by an alternate participant, including extended evaluation, regular case services and post-employment services.

**§ 404.2113 When services must have been provided.**

(a) To be payable, the services must have been provided:

(1) After September 30, 1981;

(2) No earlier than the beginning of the waiting period or the first month of entitlement, if no waiting period is required; and

(3) Before completion of a continuous period of SGA or termination of benefits, whichever comes earlier.

(b) Where disability or blindness payments are made to an individual based upon the provisions of both this Part and Part 416, the determination as to when services must have been provided may be made under this section or § 416.2213 of this Chapter, whichever is advantageous to the State VR agency or alternate participant that is participating in both VR programs.

**§ 404.2116 What costs will be paid.**

If VR services provided to an individual contributed to the individual's continuous period of SGA, the Secretary will pay the State VR agency or alternate participant for all VR services performed during the period described in § 404.2113, but subject to the following limitations:

(a) The cost must have been incurred by the State VR agency or alternate participant;

(b) The cost must not have been paid or be payable from some other source (State VR agencies or alternate participants will be expected to seek payment or services from other sources in accordance with the "similar benefit" provisions under 34 CFR 361.47(b)). Alternate participants will not be required to consider State VR services a similar benefit.

(c) The cost must be reasonable and necessary, in that it is consistent with the State's cost-containment guidelines or, in the case of an alternate participant, it is consistent with a negotiated cost-containment policy. All services provided by a State VR agency in accordance with an individualized written rehabilitation program (IWRP), or a similar document in the case of an alternate participant, will be considered necessary;

(d) The total payment in each case, including any prior payments related to earlier continuous periods of SGA made under these regulations, must not be so high as to preclude a "net savings" to the Trust Funds ("net savings" is the difference between the estimated savings to the Trust Funds, if disability benefits eventually terminate, and the total amount we pay to the State VR agency or alternate participant); and

(e) Any payment to the State VR agency for either direct or indirect VR expenses must be consistent with the cost principles described in OMB Circular No. A-87, published at 46 FR 9548 on January 28, 1981. (See § 404.2117(a) for cost principles applicable to alternate participants.)

(f) Payment will be made for administrative costs and for counseling and placement costs. This payment may be on a formula basis, or on an actual cost basis, whichever the State VR agency prefers. The formula will be negotiated. The payment will also be subject to the preceding limitations.

**Administrative Provisions**

**§ 404.2117 Applicability of these provisions to alternate participants.**

When an alternate participant provides rehabilitation services under this subpart, the payment procedures stated herein shall apply except that:

(a) Payment must be consistent with the cost principles described in 45 CFR Part 74 or 41 CFR Parts 1-15 as appropriate; and

(b) Any disputes, including appeals of audit determinations, shall be resolved in accordance with applicable statutes and regulations which will be specified in the negotiated agreement or contract.

**§ 404.2118 Method of payment.**

Payment to the State VR agencies or alternate participants for successful services will be made either by advancement of funds or by payment for services provided (with necessary adjustments for any overpayments and underpayments), as decided by the Commissioner. An advance in a given fiscal year will be toward the rehabilitation successes the State VR agency or alternate participant is expected to achieve in that year and will be based on the expected costs of these successes.

**§ 404.2120 Audits.**

(a) *General.* The State or alternate participant shall permit us and the Comptroller General of the United States (including duly authorized representatives) access to and the right to examine records relating to the services and costs for which payment was requested or made under these regulations. These records shall be retained by the State or alternate participant for the periods of time specified for retention of records in the Federal Procurement Regulations (41 CFR Parts 1-20).

(b) *Audit basis.* Auditing will be based on cost principles and written guidelines in effect at the time services were provided and costs were incurred. The State VR agency or alternate participant will be informed and given a full explanation of any questioned items. It will be given a reasonable time to explain questioned items. Any explanation furnished by the State VR agency or alternate participant will be given full consideration before a final determination is made on questioned items in the audit report.

(c) *Appeal of audit determinations.* The appropriate SSA Regional Commissioner will notify the State VR agency or alternate participant in writing of his or her final determination on the audit report. If the State VR agency (see § 404.2117(b) for alternate participants) disagrees with that determination, it may request reconsideration in writing within 60 days after receiving the Regional Commissioner's notice of the determination. The Commissioner will make a determination and notify the State VR agency of that decision in writing, usually, no later than 45 days from the date of appeal. The decision by the Commissioner will be final and conclusive unless the State VR agency

appeals that decision in writing in accordance with 45 CFR Part 16 to the Department of Health and Human Services Departmental Grant Appeals Board within 30 days after receiving it.

**§ 404.2121 Post-payment reviews and validations.**

(a) *General.* The State VR agency or alternate participant shall permit us (including duly authorized representatives) access to, and the right to examine, records relating to the services and costs for which payment was made under these regulations. Any review performed will not be considered an audit for purposes of these regulations.

(b) *Purpose.* The primary purpose of these reviews will be:

(1) To allow us to pay claims based on a minimum of documentation and later validate appropriateness of payment.

(2) To assess the validity of our documentation requirements.

(c) *Appeals.* The State VR agency or alternate participant will be notified of any discrepancies found on an individual claim basis. Disagreement with our findings may be appealed in accordance with § 404.2127. For purposes of this section, an appeal must be filed within 60 days after receiving our notice of the discrepancy.

**§ 404.2122 Confidentiality of information and records.**

The State or alternate participant shall comply with the provisions for confidentiality of information, including the security of systems, and records requirements described in 20 CFR Part 401 and pertinent written guidelines (see § 404.2123).

**§ 404.2123 Other Federal laws and regulations.**

Each State VR agency and alternate participant shall comply with the provisions of other Federal laws and regulations that directly affect its responsibilities in carrying out the vocational rehabilitation function.

**§ 404.2127 Resolution of disputes.**

(a) *Disputes on the amount to be paid.* The appropriate SSA official will notify the State VR agency or alternative participant in writing of his or her determination concerning the amount to be paid. If the State VR agency (see § 404.2117(b) for alternate participants) disagrees with that determination, the State VR agency may request reconsideration in writing within 60 days after receiving the notice of determination. The Commissioner will make a determination and notify the State VR agency of that decision in writing, usually no later than 45 days from the date of the State VR agency's appeal. The decision by the Commissioner will be final and conclusive upon the State VR agency unless the State VR agency appeals that decision in writing in accordance with 45 CFR Part 16 to the Department of Health and Human Services Departmental Grant Appeals Board within 30 days after receiving the Commissioner's decision.

(b) *Disputes on whether there was a continuous period of SGA and whether VR services contributed to a continuous period of SGA.* The rules in paragraph (a) of this section will apply, except that the Commissioner's decision will be final and conclusive. There is no right of appeal to the Grant Appeals Board.

(c) *Disputes on whether medical recovery has occurred.* Because the determination that medical recovery has occurred is an integral part of the disability benefits claims process, it can only be appealed by the individual who was receiving the disability benefit or his authorized representative. If this appeal is successful, however, the new decision that medical recovery has not occurred, or occurred at a different time than initially determined, would also apply for purposes of this subpart. This is also applicable to terminations made for reasons other than medical recovery.

## PART 416—SUPPLEMENTAL SECURITY INCOME FOR THE AGED, BLIND, AND DISABLED

Part 416 of Chapter III of Title 20 of the Code of Federal Regulations is amended as follows:

1. The authority citation for Subpart Q of Part 416 reads as follows:

**Authority:** Secs. 1102, 1611(e)(3)(A), 1615 and 1631 of the Social Security Act, as amended, 49 Stat. 647, as amended, 86 Stat. 1466, 1474, and 1475 (42 U.S.C. 1302, 1382(e)(3)(A), 1382d, and 1383).

2. Section 416.1710 is amended by revising paragraph (a) to read as follows:

**§ 416.1710 Whom we refer and when.**

(a) *Whom we refer.* If you are 16 years of age or older and under 65 years old, and receiving supplemental security income (SSI) benefits, we will refer you to the State agency providing vocational rehabilitation services. If you are under age 16, we will refer you to an agency administering services under the Maternal and Child Health Services (Title V) Block Grant Act.

* * * * *

3. A new Subpart V is added to Part 416 to read as follows:

**Subpart V—Payments for Successful Vocational Rehabilitation Services**

**General Provisions**

Sec.
416.2201 General.
416.2202 Purpose and scope.
416.2203 Definitions.
416.2204 Participation by State VR agencies or alternate participants.

**Payment Provisions**

416.2208 Requirements for payment.
416.2209 Responsibility for making payment decisions.
416.2210 What we mean by "SGA" and by "a continuous period of 9 months".
416.2211 Criteria for determining when VR services will be considered to have contributed to a continuous period of 9 months.
416.2212 Services for which payment may be made.
416.2213 When services must have been provided.
416.2216 What costs will be paid.

**Administrative Provisions**

416.2217 Applicability of these provisions to alternate participants
416.2218 Method of payment.
416.2220 Audits.
416.2221 Post-payment reviews and validations.
416.2222 Confidentiality of information and records.
416.2223 Other Federal laws and regulations.
416.2227 Resolution of disputes.

**Authority:** Secs. 1102 and 1615 of the Social Security Act; 49 Stat. 647, 86 Stat. 1474; 42 U.S.C. 1302, and 1382d; Sec. 2344 of Pub. L. 97-35; 95 Stat. 867.

## Subpart V—Payments for Successful Vocational Rehabilitation Services

### General Provisions

**§ 416.2201 General.**

These regulations provide for payment for the reasonable and necessary costs of vocational rehabilitation (VR) services which result in individuals eligible under sections 1614(a)(2) and 1614(a)(3) of the Social Security Act performing substantial gainful activity (SGA) for a continuous period of at least 9 months. The purpose is to make VR services more readily available to disabled and blind individuals and ensure that savings accrue to the general fund.

**§ 416.2202 Purpose and scope.**

This subpart describes the rules under which the Secretary will pay the State VR agencies or alternate participants for VR services which result in an individual's performance of SGA for a continuous period of at least 9 months. It also provides the criteria for determining whether VR services

furnished to the individual significantly contributed to his or her successful performance of SGA and the amount of the State VR agency's or alternate participant's costs that will be paid.

(a) Sections 416.2201–416.2203 describe the purpose of these regulations and the meaning of terms we frequently use in them.

(b) Section 416.2204 describes the requirement that States declare their intent to participate or not participate.

(c) Sections 416.2208–416.2209 describe the requirements and conditions under which we will pay a State VR agency or alternate participant under this subpart.

(d) Sections 416.2210–416.2211 describe when an individual has completed a continuous period of SGA and when VR will be considered to have contributed to that period.

(e) Sections 416.2212–416.2213 describe services for which payment will be made.

(f) Section 416.2216 describes the payment conditions.

(g) Section 416.2217 describes the applicability of the regulation to alternate participants.

(h) Section 416.2218 describes how we will make payment to State VR agencies or alternate participants for successful rehabilitation services.

(i) Sections 416.2220 and 416.2221 describe the audits and post-payment reviews and validations that we will make.

(j) Section 416.2222 discusses confidentiality of information and records.

(k) Section 416.2223 provides for the applicability of other Federal laws and regulations.

(l) Section 416.2227 provides for the resolution of disputes.

**§ 416.2203 Definitions.**

For purposes of this subpart:

"Act" means the Social Security Act, as amended.

"Alternate participants" means any public or private agencies (except participating State VR agencies (see § 416.2204)), organizations, institutions, or individuals with whom the Commissioner has entered into an agreement or contract to provide VR services.

"Blindness" means "blindness" as defined in section 1614(a)(2) of the Act.

"Commissioner" means the Commissioner of Social Security or the Commissioner's designee.

"Disability" means "disability" as defined in section 1614(a)(3) of the Act.

"Eligible" means meets all the requirements for supplemental security income benefits under sections 1614(a)(2), 1614(a)(3) or 1619(a) of the Act and is receiving SSI payments.

"Medical recovery" for purposes of this subpart is established when a disabled or blind recipient's eligibility ceases for any medical reason (other than death). The determination of medical recovery is made by the Commissioner in deciding a recipient's continuing eligibility for benefits.

"Secretary" means the Secretary of Health and Human Services or the Secretary's designee.

"SGA" means substantial gainful activity performed by an individual as defined in §§ 416.971–416.975 of this subpart or 404.1584 of this chapter.

"State" means any of the 50 States of the United States, the District of Columbia, or the Northern Mariana Islands. It includes the State VR agency.

"Vocational rehabilitation services" has the meaning assigned to it under title I of the Rehabilitation Act of 1973.

"VR agency" means an agency of the State which has been designated by the State to provide vocational rehabilitation services under title I of the Rehabilitation Act of 1973.

"We", "us" and "our" refer to the Social Security Administration (SSA) or the Secretary, as appropriate.

**§ 416.2204 Participation by State VR agencies or alternate participants.**

(a) In order to participate through its VR agency (or agencies), a State must have a plan which meets the requirements of Title I of the Rehabilitation Act of 1973; or in the case of an alternate participant, a similar plan.

(b) *State decision.* The option of participation through their VR agencies in the payment program covered by this regulation will be offered first to the States. Each State must notify the Regional Commissioner (SSA) in writing no later than the 60th day following publication of these regulations whether its VR agency (or agencies) will participate in the program. The notice must be from an official authorized to act for the State for this purpose. A State must provide an opinion from the State's Attorney General verifying the authority of the official who sent the notice to act for the State. This opinion will not be necessary if the notice is signed by a State governor.

(c) *Participation options.* (1) A State that decides not to participate initially may participate later if we have not already made a commitment to an alternate participant, or if we choose to supplement an alternate's participation by also using a State VR agency. In such cases, the State VR agency may participate under the same conditions as described for initial State VR agency participation, except that payments will be limited to successes that occur after we accept the State's offer of participation.

(2) If a State decides to participate by using a State agency other than a VR agency with a plan for VR services approved under the Rehabilitation Act of 1973, that State agency may participate only as an alternate participant.

(3) A State with one or more approved VR agencies may limit participation of those agencies. For example, a State with separate VR agencies for the blind and disabled may choose to limit participation to the agency for the blind. We would seek an alternate participant for the disability recipients.

(4) Unless otherwise specified by the State, a notice of initial participation will be effective October 1, 1981. A State may specify a later effective date, but in such cases, we may arrange for services through an alternate participant, either on an interim basis, or as a replacement of the State VR agency, or as a supplement to the State VR agency. If a State does not want its participation to be effective October 1, 1981, payments will be limited to successes occurring on or after the effective date for participation it chooses after October 1, 1981.

(d) *Unwillingness of a State to participate.* The Commissioner will declare a State unwilling to participate if—

(1) The State has notified us that it does not intend to participate through its VR agency or agencies (see (c)(3) of this section for limited participation); or

(2) The State fails to notify us by the date specified in paragraph (b) of this section of its intent to participate.

(e) *Termination or limitation of participation after initial participation.* If a participating State subsequently decides to terminate or limit participation, a notice to that effect must be made in writing to the Regional Commissioner (SSA) at least 90 days prior to effectuation. (Exception: States notifying SSA prior to publication of these regulations that they will participate may terminate participation without advance notice any time up to 30 days following publication of these regulations by a written notice to the Regional Commissioner.) A notice to terminate or limit participation must be submitted by an individual authorized to act for the State as specified in § 416.2204(b).

(f) *Alternate participants.* If a State has decided not to participate in the program through its VR agency, we may

arrange for VR services in that State through an alternate participant by agreement or contract.

**Payment Provisions**

**§ 416.2208 Requirements for payment.**

(a) The State VR agency or alternate participant must file a claim for payment in each individual case within 12 months after the month in which the continuous period of SGA is completed or, if later, within 12 months after the month of publication of these regulations;

(b) The VR services for which payment is being requested must have been provided during the period specified in § 416.2213;

(c) The services must have been provided under a State plan for VR services approved under title I of the Rehabilitation Act of 1973 or, in the case of an alternate participant, under a negotiated plan;

(d) The individual must have performed SGA for a continuous period of at least 9 months (See § 416.2210);

(e) The VR services must have contributed to the individual's performance of SGA for a continuous period of at least 9 months (See § 416.2211);

(f) The State VR agency or alternate participant must provide, or maintain for post-payment review, adequate documentation of services an costs (see § 416.2216); and

(g) The amount to be paid must be reasonable and necessary and be in compliance with the cost guidelines specified in § 416.2216.

**§ 416.2209 Responsibility for making payment decisions.**

The Commissioner will decide:

(a) Whether a continuous period of 9 months of SGA has been completed;

(b ) If and when medical recovery has occurred;

(c) Whether documentation of VR services and expenditures is adequate;

(d) Whether the VR services contributed to the continuous period of SGA; and

(e) What VR costs were reasonable and necessary and will be paid.

**§ 416.2210 What we mean by "SGA" and by "a continuous period of 9 months".**

(a) *What we mean by "SGA".* In determining whether an individual's work is SGA, we will follow the rules in §§ 416.972–416.975. We will follow these same rules for individuals who are statutorily blind, but we will evaluate the earnings in accordance with the rules in § 404.1584(d) of this chapter.

(b) *What we mean by "a continuous period of 9 months".* A continuous period of 9 months ordinarily means a period of 9 consecutive calendar months. Exception: When an individual does not perform SGA in 9 consecutive calendar months, he or she will be considered to have done so if—

(1) The individual performs 9 months of SGA within 10 consecutive months and has monthly earnings that meet or exceed the guidelines in § 416.974(b)(2), or § 404.1584(d) of this chapter if the individual is statutorily blind, or

(2) The individual performs at least 9 months of SGA within 12 consecutive months, and the reason for not performing SGA in 2 or 3 of those months was due to circumstances beyond his or her control and unrelated to the impairment (e.g., the employer closed down for 3 months).

(c) *What work we consider.* In determining if a continuous period of SGA has been completed, all of an individual's work activity may be evaluated for purposes of this section, including work performed before October 1, 1981, during a trial work period, and after eligibility for disability or blindness payments ended. We will ordinarily consider only the first 9 months of SGA that occurs. The exception will be if an individual who completed 9 months of SGA later stops performing SGA, received VR services and then performs SGA for a 9-month period. See § 416.2213 for the use of the continuous period in determining payment for VR services.

**§ 416.2211 Criteria for determining when VR services will be considered to have contributed to a continuous period of 9 months.**

The following criteria apply to individuals who received more than just evaluation services. If a State VR agency or alternate participant claims payment for services to an individual who received only evaluation services, it must establish that the individual's continuous period or medical recovery (if medical recovery occurred before completion of a continuous period) would not have occurred without the services provided. In applying the criteria below, we will consider all services initiated, coordinated or provided, including services before eligibility and before October 1, 1981.

(a) *Continuous period without medical recovery.* If an individual who has completed a "continuous period" of SGA has not medically recovered as of the date of completion of the period, the determination as to whether VR services contributed will depend on whether the continuous period began one year or less after VR services ended or more than one year after VR services ended.

(1) *One year or less.* Any VR services which might have significantly motivated or assisted the individual in returning to, or continuing in, SGA will be considered to have significantly contributed to the continuous period.

(2) *More than one year.*—(i) If the continuous period was preceded by transitional work activity (employment or self-employment which gradually evolved, with or without periodic interruptions, into SGA), and that work activity began less than a year after VR services ended, VR services will be considered to have contributed to the continuous period if any services provided significantly motivated or assisted the individual in returning to or continuing in SGA.

(ii) If the continuous period was not preceded by transitional work activity that began less than a year after VR services ended, VR services will be considered to have contributed to the continuous period only if it is reasonable to conclude that the work activity which constitutes a continuous period could not have occurred without the VR services (e.g., training) the State VR agency or alternate participant provided.

(b)(1) *Continuous period with medical recovery occurring before completion.* If an individual medically recovers before a continuous period has been completed, the cost of VR services provided will not be payable unless some services contributed to the medical recovery. VR will be considered to have contributed to the medical recovery if—

(i) The individualized written rehabilitation program (IWRP), or in the case of an alternate participant, a similar document, included medical services; and

(ii) The medical recovery occurred, at least in part, because of these medical services. (For example, the individual's medical recovery was based on improvement in a back condition which, at least in part, stemmed from surgery initiated, coordinated or provided under an IWRP).

(2) In some instances, the State VR agency or alternate participant will not have provided, initiated, or coordinated medical services. If this happens, payment for VR services may still be possible under paragraph (a) of this section if: (i) the medical recovery was not expected by us; and (ii) the individual's impairment is determined by us to be of such a nature that any medical services provided would not ordinarily have resulted in, or contributed to, the medical cessation.

**§ 416.2212 Services for which payment may be made.**

Payment may be made for all services provided by a State VR agency in accordance with title I of the Rehabilitation Act of 1973, or by an alternate participant in accordance with a negotiated plan, subject to the conditions and limitations of this subpart. This includes general diagnostic and evaluation services provided to determine eligibility for VR services and all services provided by a State VR agency under an IWRP, or under a similar document by an alternate participant, including extended evaluation, regular case services and post-employment services.

**§ 416.2213 When services must have been provided.**

(a) To be payable, the services must have been provided:

(1) After September 30, 1981;

(2) During months the individual is eligible for SSI payments; and

(3) Before completion of a continuous period of SGA.

(b) Where disability or blindness payments are made to an individual based upon the provisions of both this Part and Part 404, the determination as to when services must have been provided may be made under this section or § 404.2113 of this Chapter, whichever is advantageous to the State VR agency or alternate participant that is participating in both VR programs.

**§ 416.2216 What costs will be paid.**

If VR services provided to an individual contributed to the individual's continuous period of SGA, the Secretary will pay the State VR agency or alternate participant for all VR services performed during the period described in § 416.2213, but subject to the following limitations:

(a) The cost must have been incurred by the State VR agency or alternate participant;

(b) The cost must not have been paid or be payable from some other source (State VR agencies and alternate participants will be expected to seek payment or services from other sources in accordance with the "similar benefit" provisions under 34 CFR 361.47(b)). Alternate participants will not be required to consider State VR services a similar benefit.

(c) The cost must be reasonable and necessary in that it is consistent with the State's cost-containment guidelines or, in the case of an alternate participant, it is consistent with a negotiated cost-containment policy. All services provided by a State VR agency in accordance with an individualized written rehabilitation program (IWRP), or a similar document in the case of an alternate participant, will be considered necessary;

(d) The total payment in each case, including any prior payments related to earlier continuous periods of SGA made under these regulations, must not be so high as to preclude a "net savings" to the general fund ("net savings" is the difference between the estimated savings to the general fund, if payments for disability or blindness remain reduced or eventually terminate, and the total amount we pay to the State VR agency or alternate participant); and

(e) Any payment to a State VR agency for either direct or indirect VR expenses must be consistent with the cost principles described in OMB Circular No. A-87, published at 46 FR 9548 on January 28, 1981. (See § 416.2217(a) for cost principles applicable to alternate participants.)

(f) Payment will be made for administrative costs and for counseling and placement costs. This payment may be on a formula basis, or on an actual cost basis, whichever the State VR agency prefers. The formula will be negotiated. The payment will also be subject to the preceding limitations.

**Administrative Provisions**

**§ 416.2217 Applicability of these provisions to alternate participants.**

When an alternate participant provides rehabilitation services under this subpart, the payment procedures stated herein shall apply except that:

(a) Payment must be consistent with the cost principles described in 45 CFR Part 74 or 41 CFR Part 1-15 as appropriate; and

(b) Any disputes, including appeals of audit determinations, shall be resolved in accordance with applicable statutes and regulations which will be specified in the negotiated agreement or contract.

**§ 416.2218 Method of payment.**

Payment to the State VR agencies or alternate participants for successful services will be made either by advancement of funds or by payment for services provided (with necessary adjustments for any overpayments and underpayments), as decided by the Commissioner. An advance in a given fiscal year will be toward the rehabilitation successes the State VR agency or alternate participant is expected to achieve in that year and will be based on the expected costs of those successes.

**§ 416.2220 Audits.**

(a) *General.* The State or alternate participant shall permit us and the Comptroller General of the United States (including duly authorized representatives) access to and the right to examine records relating to the services and costs for which payment was requested or made under these regulations. These records shall be retained by the State or alternate participant for the periods of time specified for retention of records in the Federal Procurement Regulations (41 CFR Parts 1-20).

(b) *Audit basis.* Auditing will be based on cost principles and written guidelines in effect at the time services were provided and costs were incurred. The State VR agency or alternate participant will be informed and given a full explanation of any questioned items. They will be given a reasonable time to explain questioned items. Any explanation furnished by the State VR agency or alternate participant will be given full consideration before a final determination is made on questioned items in the audit report.

(c) *Appeal of audit determinations.* The appropriate SSA Regional Commissioner will notify the State VR agency or alternate participant in writing of his or her final determination on the audit report. If the State VR agency (see § 416.2217(b) for alternate participants) disagrees with that determination, it may request reconsideration in writing within 60 days after receiving the Regional Commissioner's notice of the determination. The Commissioner will make a determination and notify the State VR agency of that decision in writing, usually, no later than 45 days from the date of the appeal. The decision by the Commissioner will be final and conclusive unless the State VR agency appeals that decision in writing in accordance with 45 CFR Part 16 to the Department of Health and Human Services Departmental Grant Appeals Board within 30 days after receiving it.

**§ 416.2221 Post-payment reviews and validations.**

(a) *General.* The State VR agency or alternate participant shall permit us (including duly authorized representatives) access to, and the right to examine, records relating to the services and costs for which payment was made under these regulations. Any review performed will not be considered an audit for purposes of these regulations.

(b) *Purpose.* The primary purpose of these reviews will be:

(1) To allow us to pay claims based on a minimum of documentation and later validate appropriateness of payment.

(2) To assess the validity of our documentation requirements.

(c) *Appeals.* The State VR agency or alternate participant will be notified of any discrepancies found on an individual claim basis. Disagreement with our findings may be appealed in accordance with § 416.2227. For purposes of this section, an appeal must be filed within 60 days after receiving our notice of the discrepancy.

**§ 416.2222 Confidentiality of information and records.**

The State or alternate participant shall comply with the provisions for confidentiality of information, including the security of systems, and records requirements described in 20 CFR Part 401 and pertinent written guidelines (see § 416.2223).

**§ 416.2223 Other Federal laws and regulations.**

Each State VR agency and alternate participant shall comply with the provisions of other Federal laws and regulations that directly affect its responsibilities in carrying out the vocational rehabilitation function.

**§ 416.2227 Resolution of disputes.**

(a) *Disputes on the amount to be paid.* The appropriate SSA official will notify the State VR agency or alternate participant in writing of his or her determination concerning the amount to be paid. If the State VR agency (see § 416.2217(b) for alternate participants) disagrees with that determination, the State VR agency may request reconsideration in writing within 60 days after receiving the notice of determination. The Commissioner will make a determination and notify the State VR agency of that decision in writing, usually, no later than 45 days from the date of the State VR agency's appeal. The decision by the Commissioner will be final and conclusive upon the State VR agency unless the State VR agency appeals that decision in writing in accordance with 45 CFR Part 16 to the Department of Health and Human Services Departmental Grant Appeals Board within 30 days after receiving the Commissioner's decision.

(b) *Disputes on whether there was a continuous period of SGA and whether VR services contributed to a continuous period of SGA.* The rules in paragraph (a) of this section will apply, except that the Commissioner's decision will be final and conclusive. There is no right of appeal to the Grant Appeals Board.

(c) *Disputes on whether medical recovery has occurred.* Because the determination that medical recovery has occurred is an integral part of the disabled or blind claims payment process, it can only be appealed by the individual who was receiving the disabled or blind payment or his authorized representative. If this appeal is successful, however, the new decision that medical recovery has not occurred, or occurred at a different time than initially determined, would also apply for purposes of this subpart. This is also applicable to terminations made for reasons other than medical recovery.

[FR Doc. 83-3686 Filed 2-9-83; 8:45 am]
BILLING CODE 4190-11-M

federal register

Thursday
February 10, 1983

# Part V

# Department of Health and Human Services

## Health Care Financing Administration

## Medicare and Medicaid Program; Withholding the Federal Share of Payments to Recover Medicare or Medicaid Overpayments; Proposed Rule

**DEPARTMENT OF HEALTH AND HUMAN SERVICES**

**Health Care Financing Administration**

**42 CFR Parts 405 and 447**

# Medicare and Medicaid Program; Withholding the Federal Share of Payments To Recover Medicare or Medicaid Overpayments

**AGENCY:** Health Care Financing Administration (HCFA), HHS.

**ACTION:** Proposed rule.

**SUMMARY:** We propose to amend Medicare and Medicaid regulations to implement sections 905 of the Omnibus Reconciliation Act of 1980 (Pub. L. 96-499) and 2104 of the Omnibus Budget Reconciliation Act of 1981 (Pub. L. 97-35). Section 905 expands HCFA's authority to withhold the Federal share of Medicaid payments in order to recover Medicare overpayments. Section 2104 provides new authority for HCFA to withhold Medicare payments to recover Medicaid overpayments.

The provisions apply with respect to institutions or persons that participate (or have participated) in both programs, and to whom an overpayment under either program may have been made but cannot be recovered under that program. The intent of the statute is to facilitate recovery through offset of payments due the entity under the second program.

Previously, HCFA could suspend Federal Medicaid payments to State agencies to recover Medicare overpayments for an institutional provider of Medicare services when that provider (1) had withdrawn or been terminated from participation in the Medicare program; (2) failed to repay or make satisfactory arrangements to repay the overpayments; or (3) failed to submit appropriate information to determine the amount of overpayment, if any.

No authority existed with respect to individual practitioners or other suppliers, nor was there any provision for recovering Medicaid overpayments through Medicare.

**DATE:** To assure consideration, comments should be mailed by April 12, 1983.

**ADDRESS:** Address comments in writing to: Administrator, Department of Health and Human Services, Health Care Financing Administration, P.O. Box 17073, Baltimore, Maryland 21235.

Please address a copy of comments on information collection requirements to: Office of Information and Regulatorty Affairs, Office of Management and Budget, Room 3208, New Executive Office Building, Washington, D.C. 20503, Attention: Desk Officer for HHS.

If you prefer, you may deliver your comments to Room 309-G, Hubert H. Humphrey Building, 200 Independence Ave., SW., Washington D.C., or to Room 789, East High Rise Building, 6325 Security Boulevard, Baltimore, Maryland.

In commenting, please refer to BPO-20-P. Agencies and organizations are requested to submit comments in duplicate.

Comments will be available for public inspection, beginning approximately two weeks after publication, in Room 309-G of the Department's office at 200 Independence Ave, SW., Washington, D.C. 20201, on Monday through Friday of each week from 8:30 a.m. to 5 p.m. (202-245-7890).

**FOR FURTHER INFORMATION CONTACT:** Guy L. Harriman, Jr., 301-594-8193.

**SUPPLEMENTARY INFORMATION:**

## I. Background

A substantial number of institutions and persons furnish health care services under both the Medicare and Medicaid programs, and are reimbursed according to the specific rules applicable to each program. Overpayments may occur in either program, at times resulting in a situation where an institution or person that provides services owes a repayment to one program while still receiving reimbursement from the other. This is inappropriate since Federal funds support both. (In the Medicaid program, the Federal government shares with the States the cost of services furnished to beneficiaries.)

In the past, the Federal Government has very limited authority under the Social Security Act to attempt collection through the second program (it could do so only with respect to institutions and only through Medicaid for Medicare overpayments). Recent changes in legislation have provided mechanisms to remedy this problem, as described below.

## II. Withholding the Federal Share of Medicaid Payments To Recover Medicare Overpayments

### *A. Withholding Provisions of Pub. L. 96-499*

Section 905 of the Omnibus Reconciliation Act of 1980 (Pub. L. 96-499) amends sections 1902(a)(13), 1903(a)(1), 1903(j), and 1903(n), and adds a new section 1914 to the Social Security Act. This legislation broadens HCFA's authority to withhold the Federal share of Medicaid payments to States to recover Medicare overpayments to institutions or persons participating in both programs, and to withhold Federal payments when we are unable to collect the information necessary to determine the amount of Medicare overpayments made.

Before the passage of this legislation, if an institution's Medicare population was reduced, the institution might not receive enough in Medicare reimbursement to permit offset of the overpayment amount. Moreover, a physician or supplier might elect not to accept assignments for Medicare claims to preclude recoupment of overpayments through offsets against Medicare claims. Previous law provided that Federal financial participation (FFP) under Medicaid could be suspended, under certain circumstances, with respect to State payments to institutions that refused to repay Medicare overpayments or refused to supply information needed to determine whether an overpayment had occurred.

Under new section 1914, FFP in State Medicaid expenditures may be withheld to recover Medicare overpayments to the following entities that participate in Medicaid:

(1) An institution that has a Medicare provider agreement in effect (under section 1866 of the Act), but continues to participate in the Medicare program at such a minimal level as to prevent recovery of the overpayment;

(2) As in previous law, an institution that no longer has a Medicare provider agreement in effect (i.e., the provider has withdrawn or been terminated from participation in the program or which has refused to supply information needed to determine whether an overpayment has occurred); and

(3) A Medicaid provider that has previously accepted assignment under Medicare, but has submitted no claims or has submitted claims less than the overpayment amount.

(Under the Medicaid program, the term "provider" means any individual or entity furnishing Medicaid services under a provider agreement with the Medicaid agency.)

In addition, the Secretary may require the State to reduce its payment to the institution or person by the amount of the Medicare overpayment or by the amount of the Federal share of payments to such institution or person, whichever is less. The new provisions broaden the previous withholding authority by extending it beyond overpayments to institutions and including overpayments to physicians and other suppliers of services, and by allowing the Secretary to require

reduction of the State's payment to the overpaid institution or person.

The statute now also provides that the Secretary must establish procedures to assure restoration to the institution or person of any amounts withheld which are ultimately determined to be in excess of the Medicare overpayment; and that, if the State reduces its payment to the institution or person under an order from HCFA, the institution or person may not recover that amount from the State.

*B. Amount of FFP Reduction*

Section 1914(b) of the Act provides that, when FFP is adjusted to recover Medicare overpayments, the reduction for any quarter will be the lesser of—(a) The Federal matching share of payments to the overpaid institution or person, or (b) the total Medicare overpayment to the institution or person. Thus, if the total Federal matching share of payments to an institution or person exceeds the Medicare overpayment, only the amount of the overpayment may be withheld from the State. But, if the Medicare overpayment exceeds the quarterly FFP due to a State for expenditures to the institution or person, HCFA may withhold only the FFP amount for that quarter. In the succeeding quarters, FFP would again be compared to the remaining overpayment to the institution or person, and reductions would continue to be taken until the overpayment is entirely recovered.

It was not the intent of the Congress to penalize State Medicaid programs by making them absorb the full cost of Medicaid payments to overpaid Medicare providers. Thus, under the statute, we may also require the State to reduce its payment to the overpaid institution or person by the amount withheld from FFP.

*C. Effective Dates of Reduction*

Section 1914(c) of the Act requires that no reduction in FFP be made until the State agency and the institution or person are given notice of the action no less than 60 days before it becomes effective. That provision allows the State an opportunity to change its payment procedures to assure that reimbursement to the overpaid institution or person is limited to the State's share. We will notify the affected parties by certified mail, return receipt requested, that the FFP reduction will be effective on or after the 60th day after the day the State agency receives notice.

No FFP will be available in expenditures for services provided by the overpaid institution or person from the effective date of reduction until the reduction order has been terminated. HCFA will terminate the order when one of the following conditions occurs:

(1) The Medicare overpayment is completely recovered.

(2) The institution or person makes an agreement satisfactory to HCFA to repay the overpayment.

(3) HCFA determines that there is no overpayment based on newly acquired evidence or a subsequent audit.

*D. Implementing Regulations Required*

The statute requires that the Secretary establish procedures to (1) determine the amount of payment to which the institution or person would otherwise be entitled under Medicaid, that will be treated as an offset against Medicare overpayments, and (2) assure restoration of amounts withheld that are ultimately determined to be in excess of Medicare overpayments, and to which the institution or person could otherwise be entitled under Medicaid (section 1914(d) of the Act). HCFA will use the following procedures in addition to those specified in paragraph F.

HCFA has the authority to decide whether or not to withhold FFP from a State. We would attempt to recover overpayments only when we determine that recovery efforts would be cost effective. If the decision is made to withhold FFP, HCFA would notify the State agency of the amount of the Medicare overpayment. The State agency would then identify, on the quarterly expenditure report (Form HCFA-64) the amount of payment due the institution or person under Medicaid. HCFA would adjust the next grant award to the State, and if that grant award is insufficient for total adjustment, HCFA would make the appropriate adjustment to subsequent awards.

In addition to notifying the Medicaid agency of the State in which the institution or person is located, we would also notify the overpaid institution or person itself, and Medicaid agencies in any other States that we believe are using its services. FFP could be withheld in more than one State if more than one State is using the overpaid institution or person's services.

If, as the result of an appeal, submission of new information by the provider, or discovery of an error, HCFA determines that FFP has been withheld in excess of the overpayment, an adjustment would be made to restore State funds. The State agency would be required to establish procedures to assure, should an amount ultimately determined to be in excess of Medicare overpayment be withheld from an institution or person under Medicaid, that the excess withholding is restored. Since the States already have in place methods for handling Medicaid overpayments, including the restoration to providers of amounts withheld that are ultimately determined to be in excess of overpayments under title XIX, HCFA has decided to give States the necessary latitude for handling this aspect of the law. HCFA believes that each State is in the best position to determine appropriate procedures suited to its own payment and recovery methods. We also believe that administratively, it is more efficient to have the State handle this process.

*E. Disposition of Recovered Funds*

Section 1914(e) of the Act requires the Secretary to restore the recovered amounts to the appropriate Medicare Part A or Part B trust funds.

*F. Provisions of the Proposed Regulations*

We propose to amend Medicaid regulations at 42 CFR 447.30 (which implemented the previous statutory provision requiring suspension of FFP to former Medicare institutional providers with unresolved overpayments), to reflect the new provisions of section 905 of Pub. L. 96-499. These revisions are discussed in paragraph D, above.

We note that the institution, or the person who accepts assignment, may appeal the initial Medicare intermediary or carrier determination of overpayment through established procedures in case of a beneficiary's coverage or reimbursement dispute, for Part A of Medicare, under section 1869 of the Act (and 42 CFR Part 405, Subpart G), in case of a beneficiary or assignee's coverage or reimbursement dispute, for Part B of Medicare, under section 1842 of the Act (and 42 CFR Part 405, Subpart H), and in case of a provider's reasonable cost dispute, for Part A of Medicare, under section 1878 of the Act (and 42 CFR Part 405, Subpart R). These appeal procedures would not delay the withholding of FFP as specified in these regulations.

**III. Withholding Medicare Payments To Recover Medicaid Overpayments**

*A. Withholding provisions of Pub. L. 97-35*

Section 2104 of the Omnibus Budget Reconciliation Act of 1981 (Pub. L. 97-35), adds section 1885 to the Social Security Act. This legislation provides new authority for HCFA to withhold Medicare payments under both Parts A and B to recover overpayments made under Medicaid.

HCFA may withhold Medicare payments to any institution that has in effect a provider agreement under section 1866 of the Act, and to any physician or supplier who has accepted assignment under section 1842(b)(3)(B)(ii) of the Act. (Acceptance of assignment under Medicare means agreement that the reasonable charge determined by the Medicare fiscal agent will be the physician's or other medical supplier's *full* charge for the service. When assignment is accepted, payment is made by Medicare to the physician or supplier rather than to the beneficiary.) Under new section 1885, withholding may occur when—(1) the institution or person described above has or previously had in effect an agreement with a State agency to furnish Medicaid services; and (2) the Medicaid agency has been unable to recover overpayments made to the institution or person under the State plan or to collect the information necessary to enable it to determine the amount (if any) of overpayments made to that institution or person.

The legislation also provides that the Secretary must establish procedures to assure that the withholding authority be used only when a Medicaid agency demonstrates to the Secretary's satisfaction that it has provided adequate notice to the institution or person of a determination or of the need for information, and an opportunity to appeal the determination or to provide the necessary information.

In addition, the Secretary must establish procedures to determine the amount of the payment to which the institution or person would otherwise be entitled under Medicare which will be used to offset the Medicaid overpayment. The statute also provides that the Secretary must establish procedures to assure restoration of any amounts withheld which are ultimately determined to be in excess of the Medicaid overpayment and to which the institution or person would otherwise be entitled under Medicare.

Section 1885(c) of the Act requires the Secretary to pay from the trust funds established under sections 1817 and 1841, to the appropriate Medicaid agency, amounts recovered to offset the Medicaid overpayment.

*B. Provisions of the Proposed Regulations*

1. *Medicare regulation changes.* To implement section 2104 of Pub. L. 97-35 (which adds section 1885 to the Social Security Act), we propose to add a new § 405.375 to Medicare regulations at 42 CFR Part 405, Subpart C—Exclusions, Recovery of Overpayments, Liability of a Certifying Officer and Suspension of Payments.

a. *Amount due under Medicare.* The procedures that we would use to determine the amount to which the institution or person would otherwise be entitled under Medicare are as follows:

When the required information and documentation detailed in paragraph 2b, below, is received from the Medicaid agency, HCFA would contact the appropriate intermediary or carrier to determine the amount of Medicare payment to which the provider would be entitled.

b. *Duration of withholding.* Withholding of Medicare payments would continue until one of the following occurs:

(i) The Medicaid overpayment is completely recovered.

(ii) The provider makes an agreement satisfactory to the Medicaid agency to repay the overpayment.

(iii) The Medicaid agency determines that there is no overpayment, based on newly acquired evidence or a subsequent audit.

c. *Restoring payments withheld in excess.* The State agency must establish procedures to assure that amounts withheld under this section that are ultimately determined to be in excess of overpayments (for example, if a Medicaid provider refunds the Medicaid overpayment or the Medicaid overpayment is reduced based on newly acquired evidence or a subsequent audit after Medicare funds have been withheld) are returned to the Medicaid provider. Those procedures are subject to HCFA review through the State review process.

2. *Medicaid regulation changes.* We would add a new § 447.31 to Medicaid regulations at 42 CFR Part 447, Subpart A—Payment: General Provisions, to specify the procedures that the Medicaid agency must follow to assure the Secretary that it has given to overpaid providers adequate notice and opportunity to appeal or supply information necessary for the State to determine the amount (if any ) of the overpayment.

a. *Procedures that the Medicaid agency must follow.* When a Medicaid agency has determined that withholding of Medicare payments is justified, the agency must give the overpaid Medicaid provider at least 30 days notice by certified mail of the intended action. If the Medicaid provider supplies information to the satisfaction of the Medicaid agency during the period specified in the notice, then no further action would be taken. If the provider fails to supply the information necessary for the agency to determine the amount of the overpayment, or fails to agree to return the overpayment, either in lump sum or according to a payment schedule, then the agency may request that the appropriate HCFA regional office initiate withholding of Medicare payments.

b. *Documentation required by HCFA.* The following information or documentation, as applicable (unless otherwise specified), must be provided to HCFA by the Medicaid agency with its request for Medicare withholding:

(i) A statement of the reason that withholding is requested.

(ii) The amount of overpayment, type of overpayment, date the overpayment was determined, and the closing date of the pertinent cost reporting period (if applicable).

(iii) The quarter in which the overpayment was reported on the quarterly expenditure report (Form HCFA 64).

(iv) As needed, and upon request from HCFA, the names and addresses of the provider's officers and owners for each period that there is an outstanding overpayment.

(v) A statement of assurance that the State agency has met the notice requirements under paragraph a. above.

(vi) As needed, and upon request from HCFA, copies of notices (under paragraph a. above), and reports or contact of attempted contact with the provider concerning the overpayment, including any reduction or suspension of Medicaid payments made with respect to that overpayment.

(vii) A copy of the provider's agreement with the agency under 42 CFR 431.107.

c. *Accounting for a returned overpayment.* The agency must treat as a recovered overpayment the amounts received from HCFA to offset Medicaid overpayments.

d. *Procedures for restoring excess withholding.* The agency must establish procedures satisfactory to the Secretary, subject to HCFA review through the State review process, to assure the return the provider of amounts withheld under this section that are ultimately determined to be in excess of overpayments.

## IV. Regulatory Burden Analysis

*Executive Order 12991*

We have determined that this proposed rule does not meet the criteria for a major rule as defined by section 1(b) of Executive Order 12291. That is, this proposed rule will not have an effect on the economy of $100 million per year; or cause a major increase in

costs or prices for consumers, government agencies, industry, or any geographic region; or cause significant adverse effects on competition, employment, investment, productivity, innovation, or on the ability of United States-based enterprises to compete with foreign-based enterprises in domestic or import markets.

The proposed rules achieve the objectives set forth in Pub. Laws 96–499 and 97–35 by amending Medicaid and Medicare regulations to provide for offsets against payments in one program to recover amounts due to the other. We estimate that the total annual administrative costs to the Federal and State Governments would be relatively minor. We do not have a basis for estimating the savings to be realized, but the net effect of the proposal would be to reduce Medicaid and Medicare program overpayments by more rapid Federal recovery action.

*Regulatory Flexibility Act*

The Secretary certifies, under 5 U.S.C. 605(b), as enacted by the Regulatory Flexibility Act (Pub. L. 96–354), that these regulations will not have a significant impact on a substantial number of small entities.

As explained above, the proposed rule would implement legislation which expands HCFA's authority to withhold the Federal share of Medicaid payments to States for provider services, and to recover Medicare overpayments and provides new authority to recover Medicaid overpayments by withholding Medicare payments. The reduction in payment may have an effect on some small health care providers who have been overpaid. While that effect may be adverse, it is appropriate for the Federal government to recover money to which the overpaid provider is not entitled. Moreover the effect cannot be attributed to these regulations, but to legislative requirements in section 905 or Pub. L. 96–499 and section 2104, Pub. L. 97–35. However, we believe that the effect will not be significant. Accordingly, a regulatory flexibility analysis will not be required.

*Collection of Information Requirements*

Sections 447.30(e)(4), 447.31(b), (c) and (d) of this proposed rule contain collection of information requirements. As required by section 3504(h) of the Paperwork Reduction Act of 1980, we have submitted a copy of this proposed rule to the Office of Management and Budget (OMB) for its review of these information collection requirements. Other organizations and individuals desiring to submit comments on the information collection requirements should follow the instructions in the "ADDRESS" section of this preamble.

**Respones to Comments**

Because of the large number of comments we receive, we cannot acknowledge or respond to them individually. However, in preparing the final rule, we will consider all comments and will respond to them in the preamble to that rule.

**List of Subjects**

*42 CFR Part 405*

Administrative practice and procedure, Certification of compliance, Clinics, Contracts (Agreements), End-Stage Renal Disease (ESRD), Health care, Health facilities, Health maintenance organizations (HMO), Health professions, Health suppliers, Home health agencies, Hospitals, Inpatients, Kidney diseases, Laboratories, Medicare, Nursing homes, Onsite surveys, Outpatient providers, Reporting and recordkeeping requirements, Rural areas, X-rays.

*42 CFR Part 447*

Accounting, Clinics, Contracts (Agreements), Copayments, Drugs, Grant-in-Aid program—health, Health facilities, Health professions, Hospitals, Medicaid, Nursing homes, Payments, for services— general, Payments—timely claims, Reimbursement, Rural areas.

42 CFR Chapter IV is amended as set forth below.

## PART 405—FEDERAL HEALTH INSURANCE FOR THE AGED AND DISABLED

A. Part 405, Subpart C is amended as set forth below:

1. The authority citation is revised to read as follows:

**Authority:** Secs. 1102, 1842, 1862, 1870, 1871, 1885, 49 Stat. 647, as amended, 79 Stat. 309, 79 Stat. 325, 79 Stat. 331; 42 U.S.C. 1302, 1395u, 1395y, 1395gg, 1395hh, and 1395vv unless otherwise noted.

2. The Table of Contents is amended by adding to Subpart C a new § 405.375 to read as follows:

### Subpart C—Exclusions, Recovery of Overpayment, Liability of a Certifying Officer and Suspension of Payment

* * * * *

405.375 Withholding Medicare payments to recover Medicaid overpayments.

3. Section 405.301 is amended by adding two sentences at the end as follows:

**§ 405.301 Scope of subpart.**

Sections 405.310 to 405.320 describe certain exclusions from coverage applicable to hospital insurance benefits (Part A of title XVIII) and supplementary medical insurance benefits (Part B of title XVIII). The exclusions in this subpart are applicable in addition to any other conditions and limitations in this Part 405 and in title XVIII of the Act. Sections 405.330 to 405.332 relate to payments for expenses for certain items or services otherwise excluded from coverage. Sections 405.350 to 405.359 relate to the adjustment or recovery of an incorrect payment, or a payment made under section 1814(e) of Part A of title XVIII of the Act. Sections 405.370 to 405.373 relate to the suspension of payment to a provider of services or other supplier of services where there is evidence that such provider or supplier has been or may have been overpaid. Section 405.374 relates to the collection and compromise of claims for overpayments. Section 405.375 relates to the withholding of Medicare payments to recover Medicaid overpayments.

4. A new § 405.375 is added to read as follows:

**§ 405.375 Withholding Medicare payments to recover Medicaid overpayments.**

(a) *Basis and purpose.* This section implements section 1885 of the Act, which provides for withholding Medicare payments to certain Medicaid providers specified in paragraph (b) of this section that have not arranged to repay Medicaid overpayments or have failed to provide information necessary to determine the amount of overpayment.

(b) *When withholding may be used.* HCFA may withhold Medicare payments to recover Medicaid overpayments that a Medicaid agency has been unable to collect, if—

(1) The Medicaid agency has followed the procedure specified in § 447.31 of this chapter; and

(2) The institution or person is one described in paragraphs (c)(1) or (2) of this section.

(c) *Institutions or persons affected.*— (1) HCFA may withhold Medicare payments to recover Medicaid overpayments with respect to any of the following entities that has or had in effect, an agreement with a Medicaid agency to furnish services under an approved Medicaid State plan.

(i) An institutional provider that has in effect an agreement under section 1866 of the act.

(ii) A physician or supplier who has accepted payment on the basis of an

assignment under section 1842(B)(3)(b)(ii) of the Act.

(2) HCFA may withhold Medicare payment from an institution or person specified in paragraph

(c)(1) of this section that—

(i) Has not made arrangements satisfactory to the Medicaid agency to repay; or

(ii) Has not provided information to the Medicaid agency necessary to enable the agency to determine the existence or amount of Medicaid overpayment.

(d) *Amount to be withheld.*—(1) HCFA will contact the appropriate intermediary or carrier to determine the amount of Medicare payment to which the institution or person is entitled.

(2) HCFA may require the intermediary or carrier to withhold Medicare payments to the institution or person by the lesser of the following amounts:

(i) The amount of the Medicare payments to which the institution or person would otherwise be entitled.

(ii) The total Medicaid overpayment to the institution or person.

(e) *Notice of withholding.*—If HCFA intends to withhold payments under this section, HCFA will notify by certified mail, return receipt requested, the institution or person and the intermediary or carrier responsible for making Medicare payment to the institution or person of the intention to withhold Medicare payments. The notice will include:

(1) Identification of the institution or person; and

(2) The amount of Medicaid overpayment to be withheld from payments to which the institution or person would otherwise be entitled under Medicare.

(f) *Termination of withholding.* HCFA will terminate the withholding if—

(1) The Medicaid overpayment is completely recovered; or

(2) The institution or person makes an agreement satisfactory to the Medicaid agency to repay the overpayment;

(3) The Medicaid agency determines that there is no overpayment, based on newly acquired evidence or a subsequent audit.

(g) *Disposition of funds withheld.* HCFA will return to the Medicaid agency amounts withheld under this section to offset the agency's Medicaid overpayment.

## PART 447—[AMENDED]

The authority citation for Part 447 reads as follows:

**Authority:** Sec. 1102 of the Social Security Act, (42 U.S.C. 1302), unless otherwise noted.

B. Part 447 is amended as set forth below:

1. The Table of Contents for Subpart A is amended by revising the title of § 447.30 and adding a new § 447.31 as follows:

**Subpart A—Payments: General Provisions**

* * * * *

447.30 Withholding the Federal share of payments to Medicaid providers to recover Medicare overpayments.

447.31 Withholding Medicare payments to recover Medicaid overpayments.

* * * * *

2. Section 447.30 is retitled and revised to read as follows:

**§ 447.30 Withholding the Federal share of payments to Medicaid providers to recover Medicare overpayments.**

Withholding the Federal share of payments to Medicaid providers to recover Medicare overpayments.

(a) *Basis and purpose.* This section implements section 1914 of the Act, which provides for the withholding of FFP for Medicaid payments to a provider if the provider has not arranged to repay Medicare overpayments or has failed to provide information to determine the amount of the overpayments. The intent of the statute and regulations is to facilitate the recovery of Medicare overpayments. The provision enables HCFA to recover overpayments when institutions have reduced participation in Medicare or when physicians and suppliers have submitted few or no claims under Medicare, thus not receiving enough in Medicare reimbursement to permit offset of the overpayment.

(b) *When withholding occurs.* HCFA may withhold FFP from any State using the services of any provider specified in paragraph (c) of this section to recover Medicare overpayments that HCFA has been unable to collect if the provider participates in Medicaid and—

(1) The provider has not made arrangements satisfactory to HCFA to repay the Medicare overpayment; or

(2) HCFA has been unable to collect information from the provider to determine the existence or amount of Medicare overpayment.

(c) HCFA may withhold FFP with respect to the followin providers:

(1) An institutional provider that has or previously had in effect a Medicare provider agreement under section 1866 of the Act; and

(2) A Medicaid provider who has previously accepted Medicare payment on the basis of an assignment under section 1842(b)(3)(B)(ii) of the Act; and during the 12 month period preceding the quarter in which HCFA proposes to withhold FFP for a Medicare overpayment, submitted no claims under Medicare or submitted claims which total less than the amount of overpayment.

(d) *Order to reduce State payment.* In addition to withholding FFP, HCFA may, at its discretion, issue an order to the Medicaid agency of any State that is using the provider services, to reduce its payment to the provider by the amount withheld from FFP.

(e) *Notice of withholding.* (1) Before HCFA withholds payments under this section, HCFA will notify the provider and the Medicaid agency of each State that HCFA believes may use the overpaid provider's services under Medicaid and with respect to which it intends to withhold FFP.

(2) If applicable, the notice will also include the instruction to reduce State payments, as provided under paragraph (b) of this section.

(3) HCFA will send the notice referred to in paragraph (e)(1) by certified mail, return receipt requested.

(4) Each Medicaid agency must dientify the amount of payment due the provider under Medicaid and give that information to HCFA in the next quarterly expenditure report.

(f) *Amount to be withheld.* HCFA may withhold FFP in expenditures for services and may require the Medicaid agency to reduce its payment to the provider, by the lesser of the following amounts:

(1) The Federal matching share of payments to the provider; or

(2) The total Medicare Overpayment to the provider.

(g) *Effective date of withholding.* Withholding of payment will become effective no less than 60 days after the day on which the agency receives notice of withholding.

(h) *Duration of FFP withholding.* No FFP is available in expenditures for services that are provided by a provider specified in paragraph (c) of this section from the date on which the withholding becomes effective until the termination of withholding under paragraph (i) of this section.

(i) *Termination of withholding.* HCFA will terminate the withholding if it determines that any of the following has occurred:

(1) The Medicare overpayment is completely recovered;

(2) The institution or person makes an ageeement satisfactory to HCFA to repay the overpayment.

(3) HCFA determines that there is no overpayment based on newly acquired evidence or a subsequent audit.

(j) *Notice of termination.* HCFA will notify each State that previously

received notice of the withholding that the withholding has been terminated.

(k) *Procedures for restoring excess withholding.* (1) If an amount of FFP ultimately determined to be in excess of the Medicare overpayment is withheld, HCFA will adjust FFP to restore the excess funds withheld.

(2) The Medicaid agency must establish procedures, subject to HCFA review, to assure the restoration of any excess payments withheld from a provider by the agency under this section and withheld by HCFA under § 405.375 of this chapter.

(l) *Recovery of funds from Medicaid agency.* A provider is not entitled to recover from the Medicaid agency the amount of payment withheld by the agency in accordance with a HCFA order issued under paragraph (d) of this section.

3. A new § 447.31 is added to read as follows:

**§ 447.31 Withholding Medicare payments to recover Medicaid overpayment.**

(a) *Basis and purpose.* Section 1885 of the Act provides authority for HCFA to withhold Medicare payments to a Medicaid provider in order to recover Medicaid overpayments to the provider. Section 405.375 of this chapter sets forth the Medicare rules implementing section 1885. This section establishes the procedures that the Medicaid agency must follow when requesting that HCFA withhold Medicare payments. Section 405.375 specifies under what circumstances withholding will occur and the providers that are subject to withholding.

(b) *Agency notice to providers.*—(1) Before the agency requests recovery of a Medicaid overpayment through Medicare, the agency must send either or both of the following notices, in addition to that required under (b)(2), to the provider.

(i) Notice that—

(A) There has been an overpayment;

(B) Repayment is required; and

(C) The overpayment determination is subject to agency appeal procedures.

(ii) Notice that—

(A) Information is needed to determine the amount of overpayment, if any; and

(B) The provider has at least 30 days in which to supply the information to the agency.

(2) Notice that, 30 days or later from the date of the notice, the agency intends to refer the case to HCFA for withholding of Medicare payments.

(3) The agency must send all notices to providers by certified mail, return receipt requested.

(c) *Documentation to be submitted to HCFA.* The agency must submit the following information or documentation to HCFA (unless otherwise specified) with the request for withholding of Medicare payments.

(1) A statement of the reason that withholding is requested.

(2) The amount of overpayment, type of overpayment, date the overpayment was determined, and the closing date of the pertinent cost reporting period (if applicable).

(3) The quarter in which the overpayment was reported on the quarterly expenditure report (Form HCFA 64).

(4) As needed, and upon request from HCFA, the names and addresses of the provider's officers and owners for each period that there is an outstanding overpayment.

(5) A statement of assurance that the State agency has met the notice requirements under paragraph (b) of this section.

(6) As needed, and upon request for HCFA, copies of notices (under paragraph (b) of this section), and reports of contact or attempted contact with the provider concerning the overpayment, including any reduction or suspension of Medicaid payments made with respect to that overpayment.

(7) A copy of the provider's agreement with the agency under § 431.107 of this chapter.

(d) *Notification to terminate withholding.*—(1) If an agency has requested withholding under this section, it must notify HCFA if any of the following occurs:

(i) The Medicaid provider makes an agreement satisfactory to the agency to repay the overpayment;

(ii) The Medicaid overpayment is completely recovered; or

(iii) The agency determines that there is no overpayment, based on newly acquired evidence or subsequent audit.

(2) Upon receipt of notification from the State agency, HCFA will terminate withholding.

(e) *Accounting for returned overpayment.* The agency must treat as a recovered overpayment the amounts received from HCFA to offset Medicaid overpayments.

(f) *Procedures for restoring excess withholding.* The agency must establish procedures satisfactory to the Secretary to assure the return to the provider of amounts withheld under this section that are ultimately determined to be in excess of overpayments. Those procedures are subject to HCFA review as defined in the State plan.

(Catalog of Federal Domestic Assistance Program No. 13.714, Medical Assistance Program; No. 13.773, Medicare-Hospital Insurance; No. 13.774, Medicare-Supplementary Medical Insurance)

Dated: October 27, 1982.

**Carolyne K. Davis,**

*Administrator, Health Care Financing Administration.*

Approved: December 3, 1982.

**Richard S. Schweiker,**

*Secretary.*

[FR Doc. 83-3629 Filed 2-10-83; 8:45 am]

BILLING CODE 4120-03-M

# Reader Aids

Federal Register

Vol. 48, No. 29

Thursday, February 10, 1983

## INFORMATION AND ASSISTANCE

### PUBLICATIONS

**Code of Federal Regulations**

| | |
|---|---|
| CFR Unit | 202-523-3419<br>523-3517 |
| General information, index, and finding aids | 523-5227 |
| Incorporation by reference | 523-4534 |
| Printing schedules and pricing information | 523-3419 |

**Federal Register**

| | |
|---|---|
| Corrections | 523-5237 |
| Daily Issue Unit | 523-5237 |
| General information, index, and finding aids | 523-5227 |
| Privacy Act | 523-5237 |
| Public Inspection Desk | 523-5215 |
| Scheduling of documents | 523-3187 |

**Laws**

| | |
|---|---|
| Indexes | 523-5282 |
| Law numbers and dates | 523-5282<br>523-5266 |
| Slip law orders (GPO) | 275-3030 |

**Presidential Documents**

| | |
|---|---|
| Executive orders and proclamations | 523-5233 |
| Public Papers of the President | 523-5235 |
| Weekly Compilation of Presidential Documents | 523-5235 |

| | |
|---|---|
| **United States Government Manual** | 523-5230 |

### SERVICES

| | |
|---|---|
| Agency services | 523-5237 |
| Automation | 523-3408 |
| Library | 523-4986 |
| Magnetic tapes of FR issues and CFR volumes (GPO) | 275-2867 |
| Public Inspection Desk | 523-5215 |
| Special Projects | 523-4534 |
| Subscription orders (GPO) | 783-3238 |
| Subscription problems (GPO) | 275-3054 |
| TTY for the deaf | 523-5229 |

## FEDERAL REGISTER PAGES AND DATES, FEBRUARY

4447-4646 ..... 1
4647-4766 ..... 2
4767-5212 ..... 3
5213-5526 ..... 4
5527-5708 ..... 7
5709-5878 ..... 8
5879-6086 ..... 9
6087-6310 ..... 10

## CFR PARTS AFFECTED DURING FEBRUARY

At the end of each month, the Office of the Federal Register publishes separately a list of CFR Sections Affected (LSA), which lists parts and sections affected by documents published since the revision date of each title.

**3 CFR**

**Executive Orders:**
11269 (amended by EO 12403) ..... 6087
12403 ..... 6087

**Proclamations:**
5018 ..... 5527, 5881
5019 ..... 5709

**Rules:**
*See* 35 CFR Part 133 ..... 5879

**4 CFR**

56 ..... 4647

**5 CFR**

Ch. XIV ..... 5529
1201 ..... 5213
2471 ..... 5529
2472 ..... 5529

**Proposed Rules:**
2470 ..... 5568
2471 ..... 5568

**7 CFR**

29 ..... 5883
301 ..... 4447
354 ..... 5215
624 ..... 4447
905 ..... 4448
907 ..... 4767, 6089
910 ..... 5216
1701 ..... 4450

**Proposed Rules:**
20 ..... 5746
28 ..... 4477
180 ..... 4797
910 ..... 5950
981 ..... 5569
1030 ..... 5747
1701 ..... 4478

**8 CFR**

103 ..... 4451
204 ..... 4451
208 ..... 5885
214 ..... 4767, 4769
245 ..... 4769

**9 CFR**

166 ..... 6089
301 ..... 6090
318 ..... 6090
327 ..... 6091
381 ..... 6090

**10 CFR**

Ch. II ..... 6082
35 ..... 5217
50 ..... 5532, 5886
70 ..... 5886
205 ..... 6082
810 ..... 5218

**Proposed Rules:**
205 ..... 5748
960 ..... 5670
961 ..... 5458

**11 CFR**

106 ..... 5224
9031 ..... 5224
9032 ..... 5224
9033 ..... 5224
9034 ..... 5224
9035 ..... 5224
9036 ..... 5224
9037 ..... 5224
9038 ..... 5224
9039 ..... 5224

**12 CFR**

26 ..... 5533
207 ..... 6094
212 ..... 5533
217 ..... 4453, 5888
220 ..... 6094
221 ..... 6094
224 ..... 6094
226 ..... 4454
265 ..... 4458, 5535
348 ..... 5533
545 ..... 4647
556 ..... 4647
563f ..... 5533
711 ..... 5533

**Proposed Rules:**
3 ..... 4479
6 ..... 4479
7 ..... 4479
32 ..... 4479
204 ..... 5750
205 ..... 4667
226 ..... 4669
250 ..... 5570
701 ..... 4798

**13 CFR**

115 ..... 5888
302 ..... 5711

**14 CFR**

39 ..... 4770, 4771, 5536-5539, 6096, 6097
71 ..... 5540, 6100, 6101
91 ..... 6102
97 ..... 5541
302 ..... 4650
1203 ..... 5889

**Proposed Rules:**
71 ..... 4799, 5571-5573, 6125-6128
250 ..... 4479
251 ..... 5950
287 ..... 5950

**15 CFR**

399 ... 5893

**17 CFR**

3 ... 4650
140 ... 5544
145 ... 5544
200 ... 5544
271 ... 5894
**Proposed Rules:**
33 ... 6128
240 ... 6130

**18 CFR**

2 ... 5152
4 ... 4458
154 ... 5152
157 ... 5251
270 ... 5152, 5190
271 ... 4459-4461, 4771, 4772, 5152-5197, 5896-5898
**Proposed Rules:**
271 ... 4480-4483, 4800, 5953, 5954
274 ... 4483, 4800

**19 CFR**

201 ... 5898

**20 CFR**

404 ... 5711, 6286
416 ... 6286
**Proposed Rules:**
416 ... 6133

**21 CFR**

5 ... 5251
74 ... 4463, 5252
81 ... 4463, 5252-5262
82 ... 4463, 5252, 5262
173 ... 5715
182 ... 5716
184 ... 5716
193 ... 5899, 5900
510 ... 4463
520 ... 4463
524 ... 5264
558 ... 4464, 5265, 5266
561 ... 5900
**Proposed Rules:**
172 ... 5751
182 ... 4486, 5279, 5751, 5758
184 ... 4486, 5279, 5751, 5758, 5761
348 ... 5852
358 ... 5761
558 ... 4490

**23 CFR**

Ch. I ... 5210, 5720, 6103
1209 ... 5545

**24 CFR**

885 ... 5721
3280 ... 5266

**25 CFR**

174 ... 5901

**26 CFR**

6a ... 4652
**Proposed Rules:**
1 ... 5762, 6134
51 ... 5280

**27 CFR**

**Proposed Rules:**
9 ... 5280, 5955-5961
25 ... 4803
245 ... 4803
252 ... 4803

**29 CFR**

1910 ... 5267
**Proposed Rules:**
2690 ... 4632
2691 ... 4632
2692 ... 4632
2693 ... 4632
2694 ... 4632
2695 ... 4632

**30 CFR**

211 ... 5902
934 ... 5902
**Proposed Rules:**
902 ... 5763
927 ... 5964

**32 CFR**

199 ... 5916
720 ... 4464
770 ... 5555

**33 CFR**

25 ... 4773
100 ... 6104
117 ... 4773, 4775
154 ... 4776
159 ... 4776
165 ... 6104
**Proposed Rules:**
100 ... 6135
110 ... 4832, 6136
117 ... 6137, 6138
144 ... 4833

**34 CFR**

**Proposed Rules:**
201 ... 4677
202 ... 4677
203 ... 4677
204 ... 4677
302 ... 4677

**35 CFR**

133 ... 5879

**36 CFR**

65 ... 4652

**39 CFR**

10 ... 4776

**40 CFR**

Ch. I ... 5684
52 ... 5722, 5723, 6105, 6106
60 ... 5452
80 ... 5724, 5727
81 ... 5269, 5727, 5728
123 ... 4661, 4777, 5556, 5918
180 ... 5919-5921
228 ... 5557
761 ... 4467, 5729
**Proposed Rules:**
Ch. I ... 5965
52 ... 4834, 4972-5144, 5282, 5764
81 ... 5131, 5133, 5765
86 ... 5766
122 ... 5872
123 ... 4836, 5284, 5872
180 ... 4678-4680, 5965-5968
256 ... 5767
264 ... 5872
455 ... 5767, 6250
465 ... 6268
467 ... 5575

**41 CFR**

5-3 ... 4468
5-16 ... 4468
101-36 ... 6107
**Proposed Rules:**
101-41 ... 5969
105-61 ... 6139

**42 CFR**

51b ... 4472
405 ... 6108
431 ... 5730
435 ... 5730
436 ... 5730
440 ... 5730
447 ... 5730
**Proposed Rules:**
57 ... 4492
405 ... 6304
447 ... 6304

**43 CFR**

20 ... 5736
**Public Land Orders:**
6006 (Corrected by PLO 6347) ... 6113
6111 (Corrected by PLO 6350) ... 6114
6286 (Corrected by PLO 6349) ... 6114
6305 (Corrected by PLO 6348) ... 6113
6347 ... 6113
6348 ... 6113
6349 ... 6114
6350 ... 6114

**44 CFR**

64 ... 4663, 4778
**Proposed Rules:**
67 ... 4681

**45 CFR**

**Proposed Rules:**
801 ... 5769

**46 CFR**

Ch. I ... 4780
401 ... 6114
502 ... 5737
503 ... 5742
522 ... 5742
524 ... 5743
531 ... 5737
536 ... 5737
540 ... 5737
542 ... 5742
543 ... 5742
544 ... 5742
552 ... 5742
**Proposed Rules:**
Ch. IV ... 5769
10 ... 5575
25 ... 4837
33 ... 4837
35 ... 4837
94 ... 4837
97 ... 4837
107 ... 4837
108 ... 4837
109 ... 4837
157 ... 5575
160 ... 4837
192 ... 4837
196 ... 4837

**47 CFR**

1 ... 4783
2 ... 4783, 5922
15 ... 4788, 5922, 5928
31 ... 5928
43 ... 5928
64 ... 6116
67 ... 5939
73 ... 4664, 4665, 4792, 5940-5947
81 ... 6119
83 ... 6119
90 ... 4792, 5922
95 ... 4783
**Proposed Rules:**
2 ... 4845
5 ... 4845
15 ... 4845
21 ... 4845
73 ... 4692-4698, 4845, 5970-5978
74 ... 4845
78 ... 4845
83 ... 4847
87 ... 4849
90 ... 4851
94 ... 4845
95 ... 5982
97 ... 4855

**49 CFR**

218 ... 6122
228 ... 6123
387 ... 5559
575 ... 5690
1003 ... 5269
1043 ... 4666, 5269
**Proposed Rules:**
630 ... 6143
1033 ... 4493
1043 ... 4699

**50 CFR**

23 ... 4795
642 ... 5270
658 ... 5744
671 ... 5276
681 ... 5560
**Proposed Rules:**
17 ... 4860, 5284
222 ... 5982
227 ... 5285
301 ... 4861
611 ... 5575
656 ... 5575

## AGENCY PUBLICATION ON ASSIGNED DAYS OF THE WEEK

The following agencies have agreed to publish all documents on two assigned days of the week (Monday/Thursday or Tuesday/Friday). This is a voluntary program. (See OFR NOTICE 41 FR 32914, August 6, 1976.) Documents normally scheduled for publication on a day that will be a Federal holiday will be published the next work day following the holiday.

| Monday | Tuesday | Wednesday | Thursday | Friday |
|---|---|---|---|---|
| DOT/SECRETARY | USDA/ASCS | | DOT/SECRETARY | USDA/ASCS |
| DOT/COAST GUARD | USDA/FNS | | DOT/COAST GUARD | USDA/FNS |
| DOT/FAA | USDA/REA | | DOT/FAA | USDA/REA |
| DOT/FHWA | USDA/SCS | | DOT/FHWA | USDA/SCS |
| DOT/FRA | MSPB/OPM | | DOT/FRA | MSPB/OPM |
| DOT/MA | LABOR | | DOT/MA | LABOR |
| DOT/NHTSA | HHS/FDA | | DOT/NHTSA | HHS/FDA |
| DOT/RSPA | | | DOT/RSPA | |
| DOT/SLSDC | | | DOT/SLSDC | |
| DOT/UMTA | | | DOT/UMTA | |

## List of Public Laws

**Note:** No public bills which have become law were received by the Office of the Federal Register for inclusion in today's **List of Public Laws.**

**Last Listing January 19, 1983**

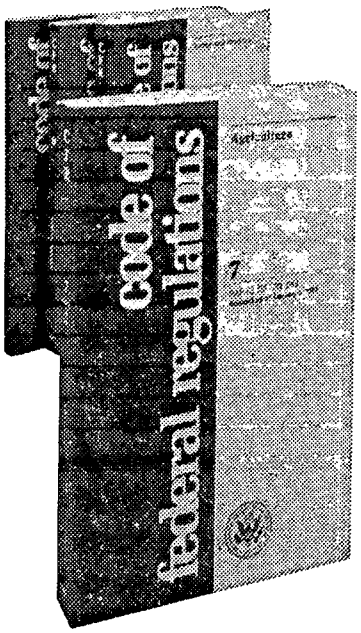


*Just Released*

# Code of Federal Regulations

**Revised as of October 1, 1982**

| Quantity | Volume | Price | Amount |
|---|---|---|---|
| _____ | Title 46—Shipping (Parts 90 to 109) | $6.50 | $_____ |
| _____ | Title 49—Transportation (Parts 1200 to 1299) | 7.50 | _____ |
| | | **Total Order** | $_____ |

A Cumulative checklist of CFR issuances for 1982 appears in the back of the first issue of the Federal Register each month in the Reader Aids section. In addition, a checklist of current CFR volumes, comprising a complete CFR set, appears each month in the LSA (List of CFR Sections Affected).

*Please do not detach*

## Order Form

**Mail to:** Superintendent of Documents, U.S. Government Printing Office, Washington, D.C. 20402

Enclosed find $_____. Make check or money order payable to Superintendent of Documents. (Please do not send cash or stamps). Include an additional 25% for foreign mailing.

**Charge to my Deposit Account No.**

☐☐☐☐☐☐☐–☐

Order No._____

VISA®

MasterCard

**Credit Card Orders Only**

Total charges $_____ Fill in the boxes below.

Credit Card No. ☐☐☐☐☐☐☐☐☐☐☐☐☐☐☐☐☐

Expiration Date Month/Year ☐☐☐☐

Please send me the **Code of Federal Regulations** publications I have selected above.

Name—First, Last

Street address

Company name or additional address line

City State ZIP Code

(or Country)

**PLEASE PRINT OR TYPE**

**For Office Use Only.**

| | Quantity | Charges |
|---|---|---|
| Enclosed | | |
| To be mailed | | |
| Subscriptions | | |
| Postage | | |
| Foreign handling | | |
| MMOB | | |
| OPNR | | |
| UPNS | | |
| Discount | | |
| Refund | | |

2-11-83
Vol. 48 No. 30

# federal register

Friday
February 11, 1983

RECEIVED
FEB 24 1983
SUPREME COURT LIBRARY

RETURN TO
SUPREME COURT LIBRARY
SALEM, OREGON

United States
Government
Printing Office
SUPERINTENDENT
OF DOCUMENTS
Washington, D.C. 20402

OFFICIAL BUSINESS
Penalty for private use, $300

Federal Register
(ISSN 0097-6326)

U.S.MAIL

Postage and Fees Paid
U.S. Government Printing Office
375

SECOND CLASS NEWSPAPER