5-21-86
Vol. 51 No. 98
Pages 18559-18754

Federal Register

Wednesday
May 21, 1986

Selected Subjects

Administrative Practice and Procedure
Interstate Commerce Commission

Agricultural Commodities
Agricultural Marketing Service

Aliens
Immigration and Naturalization Service

Aviation Safety
Federal Aviation Administration

Claims
Commerce Department

Communications Common Carriers
Federal Communications Commission

Grant Programs—Education
Education Department

Endangered and Threatened Species
Fish and Wildlife Service

Food Stamps
Food and Nutrition Service

Government Employees
Personnel Management Office

Government Procurement
Defense Department

Health Insurance
Personnel Management Office

CONTINUED INSIDE

Selected Subjects

FEDERAL REGISTER Published daily, Monday through Friday, (not published on Saturdays, Sundays, or on official holidays), by the Office of the Federal Register, National Archives and Records Administration, Washington, DC 20408, under the Federal Register Act (49 Stat. 500, as amended; 44 U.S.C. Ch. 15) and the regulations of the Administrative Committee of the Federal Register (1 CFR Ch. I). Distribution is made only by the Superintendent of Documents, U.S. Government Printing Office, Washington, DC 20402.

The **Federal Register** provides a uniform system for making available to the public regulations and legal notices issued by Federal agencies. These include Presidential proclamations and Executive Orders and Federal agency documents having general applicability and legal effect, documents required to be published by act of Congress and other Federal agency documents of public interest. Documents are on file for public inspection in the Office of the Federal Register the day before they are published, unless earlier filing is requested by the issuing agency.

The **Federal Register** will be furnished by mail to subscribers for $300.00 per year, or $150.00 for 6 months, payable in advance. The charge for individual copies is $1.50 for each issue, or $1.50 for each group of pages as actually bound. Remit check or money order, made payable to the Superintendent of Documents, U.S. Government Printing Office, Washington, DC 20402.

There are no restrictions on the republication of material appearing in the **Federal Register.**

Questions and requests for specific information may be directed to the telephone numbers listed under INFORMATION AND ASSISTANCE in the READER AIDS section of this issue.

How To Cite This Publication: Use the volume number and the page number. Example: 51 FR 12345.

Loan Programs—Health
Public Health Service

Marketing Agreements
Agricultural Marketing Service

Old-Age, Survivors, and Disability Insurance
Social Security Administration

Penalties
Federal Maritime Commission

Pesticides and Pests
Environmental Protection Agency

Securities
Securities and Exchange Commission

Surface Mining
Surface Mining Reclamation and Enforcement Office

Contents

Federal Register
Vol. 51, No. 98
Wednesday, May 21, 1986

Administrative Conference of United States
NOTICES
Private attorneys; use by Federal agencies, 18638

Agricultural Marketing Service
RULES
Avocados grown in Florida, and imported, 18565
PROPOSED RULES
Perishable Agricultural Commodities Act:
License fees increase, 18590

Agriculture Department
See also Agricultural Marketing Service; Food and Nutrition Service
NOTICES
Agency information collection activities under OMB review, 18638
Privacy Act; systems of records, 18639

Civil Rights Commission
NOTICES
Handicapped newborns, protection; hearing, 18639

Commerce Department
See also Foreign-Trade Zones Board; International Trade Administration; National Oceanic and Atmospheric Administration; National Technical Information Service
PROPOSED RULES
Federal claims collection, 18605

Conservation and Renewable Energy Office
NOTICES
Consumer product test procedures; waiver petitions:
Ford Products Corp., 18659
Whirlpool Corp., 18655

Consumer Product Safety Commission
NOTICES
Agency information collection activities under OMB review, 18645

Copyright Royalty Tribunal
NOTICES
Cable royalty fees:
Distribution proceedings, 18646

Defense Department
RULES
Acquisition regulations:
Progress payments; limitations
Correction, 18587
Weapon systems warranties, 18587
NOTICES
Federally funded research and development centers:
Strategic Defense Initiative Institute, 18646
Handicapped persons; uniform Federal accessibility standards; correction, 18647
Meetings:
DIA Scientific Advisory Committee, 18647
Graduate Medical Education Advisory Committee, 18647

Drug Enforcement Administration
NOTICES
Applications, hearings, determinations, etc.:
Jones, Mary B., M.D., 18674

Education Department
RULES
Educational research and improvement:
Library Services and Construction Act programs, 18580
NOTICES
Grants; availability, etc.:
Experimental and innovative training program, 18651
Independent living services for older blind individuals program, 18652

Energy Department
See Conservation and Renewable Energy Office; Federal Energy Regulatory Commission

Environmental Protection Agency
RULES
Pesticide chemicals in or on raw agricultural commodities; tolerances and exemptions, etc.:
Aluminum tris(o-ethylphosphonate), 18585
NOTICES
Meetings:
Residential Wood Combustion Units New Source Performance Standards Negotiated Rulemaking Advisory Committee, 18661
Pesticide programs:
Pesticide assessment guidelines; data reporting addenda; inquiry, 18660
Toxic and hazardous substances control:
Premanufacture notices receipts; correction, 18661

Executive Office of the President
See Presidential Documents

Federal Aviation Administration
RULES
Airworthiness directives:
Boeing, 18571
British Aerospace, 18572
Cessna, 18573
Fairchild, 18574
McDonnell Douglas, 18575
United Instruments, Inc., 18576
Transition areas, 18578
PROPOSED RULES
Airworthiness directives:
Beech, 18600
Boeing, 18602
Control zones, 18603
Rulemaking petitions; summary and disposition, 18599
Transition areas, 18604
(2 documents)

Federal Communications Commission
PROPOSED RULES
Common carrier services:
Public land mobile services—
Individual airborne mobile units in domestic public air-ground radiotelephone service, licensing procedures, 18623

Federal Deposit Insurance Corporation
NOTICES
Meetings; Sunshine Act, 18725

Federal Emergency Management Agency
NOTICES
Agency information collection activities under OMB review, 18661
(2 documents)

Federal Energy Regulatory Commission
NOTICES
Natural Gas Policy Act:
Pipeline decontrol; waivers, rehearings, clarifications, etc., 18653
Applications, hearings, determinations, etc.:
Transcontinental Gas Pipe Line Corp., 18654

Federal Maritime Commission
PROPOSED RULES
Marine terminal operations:
Truck detention at Port of New York; penalty charges, 18622

Federal Reserve System
NOTICES
Applications, hearings, determinations, etc.:
Financial Institutions, Inc., 18661
Marble Financial Corp. et al., 18662

Fish and Wildlife Service
PROPOSED RULES
Endangered and threatened species:
Blackside dace, 18624
Florida scrub jay, 18627
Mount Graham red squirrel, 18630
Endangered Species Convention:
American alligators; export, 18634

Food and Drug Administration
RULES
Biological products:
Technical amendments and corrections
Correction, 18580
Human drugs:
Over-the-counter (OTC) drug products labeling; exclusivity policy change—
Correction, 18580
NOTICES
Meetings:
Advisory committees, panels, etc., 18662

Food and Nutrition Service
RULES
Food stamp program:
Food Security Act of 1985; nondiscretionary provisions, 18744

Foreign-Trade Zones Board
NOTICES
Applications, hearings, determinations, etc.:
California, 18639

Health and Human Services Department
See Food and Drug Administration; Human Development Services Office; Public Health Service; Social Security Administration

Housing and Urban Development Department
NOTICES
Agency information collection activities under OMB review, 18666
(2 documents)
Organization, functions, and authority delegations:
Regional offices, etc.; order of succession—
New York, 18665

Human Development Services Office
NOTICES
Organization, functions, and authority delegations, 18664

Immigration and Naturalization Service
RULES
Aliens:
Classification as immediate relative of U.S. citizen or as preference immigrant; occupational preference petitions filing, 18568
PROPOSED RULES
Nonimmigrants; documentary requirements; waivers, etc.:
Temporary alien employment (intracompany transferees, etc.), 18591

Interior Department
See Fish and Wildlife Service; Land Management Bureau; Minerals Management Service; Surface Mining Reclamation and Enforcement Office

International Trade Administration
NOTICES
Antidumping:
Malleable cast iron pipe fittings from—
Brazil, 18640
Offshore platform jackets and piles from—
Japan, 18641
Korea, 18642
Steel wire nails from—
China, 18640
Countervailing duties:
Offshore platform jackets and piles from—
Korea, 18643
Meetings:
Telecommunications Equipment Technical Advisory Committee, 18641

International Trade Commission
NOTICES
Import investigations:
Caribbean Basin Economic Recovery Act; impact on U.S. industries and consumers; correction, 18670
Cast-iron pipe fittings from—
Brazil, Korea, and Taiwan, 18670
Frozen concentrated orange juice from Brazil, 18671
Multi-level touch control lighting switches, 18672
Nut jewelry and parts, 18672, 18673
(2 documents)

Offshore platform jackets and piles from—
Korea and Japan, 18673
Portable bag sewing machines and parts, 18672
Meetings; Sunshine Act, 18725

Interstate Commerce Commission
RULES
Practice and procedure:
Fees for licensing and related services; clarification, 18589
NOTICES
Railroad operation, acquisition, construction, etc.:
Port of Tillamook Railroad et al., 18674
Railroad services abandonment:
Chesapeake & Ohio Railway Co., 18674

Justice Department
See Drug Enforcement Administration; Immigration and Naturalization Service

Labor Department
See Occupational Safety and Health Administration; Pension and Welfare Benefits Administration

Land Management Bureau
RULES
Public land orders:
Alaska, 18586
NOTICES
Alaska Native claims selection:
Eklutna, Inc., 18667
Sealaska Corp., 18668
Conservation and recreation areas, etc.:
California Desert Conservation Area Plan and Eastern San Diego County Framework Management Plan, 18668
Environmental statements; availability, etc.:
Thousand Springs Energy Park project, NV, 18668
Oil and gas leasing:
Alaska, 18669
(2 documents)

Minerals Management Service
NOTICES
Outer Continental Shelf; development operations coordination:
Koch Exploration Co., 18670
Mobil Oil Exploration & Producing Southeast Inc., 18669

National Credit Union Administration
NOTICES
Meetings; Sunshine Act, 18725

National Oceanic and Atmospheric Administration
PROPOSED RULES
Fishery conservation and management:
Gulf of Mexico stone crab; correction, 18637
NOTICES
Marine mammals:
Taking incidental to commercial fishing operations, 18644

National Technical Information Service
NOTICES
Patent licenses, exclusive:
Biogen Research Corp., 18645

Nuclear Regulatory Commission
NOTICES
Operating licenses, amendments; no significant hazards considerations:
Bi-weekly notices, 18676
Applications, hearings, determinations, etc.:
Duke Power Co., 18705
Duke Power Co. et al., 18708
Sequoyah Fuels Corp., 18709
Yankee Atomic Electric Co., 18709

Occupational Safety and Health Administration
NOTICES
State plans; standards approval, etc.:
California, 18675

Pension and Welfare Benefits Administration
NOTICES
Meetings:
Employee Welfare and Pension Benefit Plans Advisory Council, 18676

Personnel Management Office
RULES
Health benefits, Federal employees:
Disputed claims process, 18562
Pay administration:
Prevailing rate systems—
Job grading appeals under Federal Wage System, 18561

Postal Service
NOTICES
Handicapped persons; uniform Federal accessibility standards; correction, 18647

Presidential Documents
PROCLAMATIONS
Special observances:
World Trade Week (Proc. 5482), 18559

Public Health Service
See also Food and Drug Administration
PROPOSED RULES
Grants:
Health education assistance loan program, 18728

Securities and Exchange Commission
RULES
Securities:
Transaction fees; exemptions for National Market System Securities, 18578
NOTICES
Agency information collection activities under OMB review, 18713
Self-regulatory organizations; proposed rule changes:
American Stock Exchange, Inc., 18713
National Association of Securities Dealers, Inc., 18714
Self-regulatory organizations; unlisted trading privileges:
Midwest Stock Exchange, Inc., 18714
Applications, hearings, determinations, etc.:
American Broadcasting Companies, 18710
Bellevue Corp., 18710
Central Securities Corp., 18714
First Boston Investment Ltd. Partnership No. 3 et al., 18715
Mutual of America Life Insurance Co. et al., 18710
National Bank of Canada, 18718
New America Fund, Inc., 18712

Public utility holding company act filings (Kentucky Power Co. et al.), 18719
Sequoyah-XI Ltd. Partnership et al., 18716

Small Business Administration
NOTICES
Agency information collection activities under OMB review, 18721
License surrenders:
Affiliated Investment Fund, Ltd., 18722
Transatlantic Capital Corp., 18722

Social Security Administration
PROPOSED RULES
Social security benefits and supplemental security income:
Continued payment of benefits during appeal, 18611

Surface Mining Reclamation and Enforcement Office
PROPOSED RULES
Permanent program submission:
Wyoming, 18621

Transportation Department
See also Federal Aviation Administration
PROPOSED RULES
Aviation proceedings:
Air carrier agreement, merger acquisition, etc., review; exemption from prior approval:
Correction, 18605
NOTICES
Aviation proceedings:
Hearings, etc.—
National Airlines, Inc., 18722

Treasury Department
NOTICES
Notes, Treasury:
Z-1988 series, 18722

United States Information Agency
NOTICES
Agency information collection activities under OMB review, 18724

United States Institute of Peace
NOTICES
Meetings; Sunshine Act, 18726

Separate Parts In This Issue

Part II
Department of Health and Human Services, Public Health Service, 18728

Part III
Department of Agriculture, Food and Nutrition Service, 18744

Reader Aids
Additional information, including a list of public laws, telephone numbers, and finding aids, appears in the Reader Aids section at the end of this issue.

CFR PARTS AFFECTED IN THIS ISSUE

A cumulative list of the parts affected this month can be found in the Reader Aids section at the end of this issue.

3 CFR
Proclamations:
5482 18590

5 CFR
532 18561
890 18562

7 CFR
271 18744
272 18744
273 18744
274 18744
276 18744
279 18744
285 18744
915 18565
944 18565
Proposed Rules:
46 18590

8 CFR
204 18568
Proposed Rules:
212 18591
214 18591

14 CFR
39 (6 documents) 18571–18576
71 18578
Proposed Rules:
Ch. I 18599
39 (2 documents) 18600, 18602
71 (3 documents) 18603, 18604
303 18605

15 CFR
Proposed Rules:
21 18605

17 CFR
240 18578

20 CFR
Proposed Rules:
404 18611
416 18611

21 CFR
330 18580
331 18580
332 18580
357 18580
630 18580

30 CFR
Proposed Rules:
950 18621

34 CFR
768 18580
769 18580
770 18580
771 18580
772 18580

40 CFR
180 18585

42 CFR
Proposed Rules:
60 18728

43 CFR
Public Land Orders:
6615 18586

46 CFR
Proposed Rules:
530 18622

47 CFR
Proposed Rules:
22 18623

48 CFR
232 18587
246 18587
252 18587

49 CFR
1002 18589

50 CFR
Proposed Rules:
17 (3 documents) 18624–18630
23 18634
654 18637

Federal Register
Vol. 51, No. 98
Wednesday, May 21, 1986

Presidential Documents

Title 3—

The President

Proclamation 5482 of May 19, 1986

World Trade Week, 1986

By the President of the United States of America

A Proclamation

Each year, World Trade Week provides an opportunity to celebrate the importance of international trade to our present prosperity and our future prospects. Indeed, it benefits us and all the nations with whom we do business.

American business initiative and ingenuity have never stopped at our borders. Since the birth of our Nation, we have been a dynamic force in international trade. That trade has helped us build the most productive economy in the history of mankind.

Today, America's prosperity depends as never before on our ability to compete in international markets. Our exports make a major contribution to domestic growth and employment. The United States is today the world's leading exporter. We export nearly 16 percent more goods to the world than our nearest competitor, yet we export far less of our total production than many other trading nations. We need to increase our exports to further strengthen our economy.

American companies need the same free and fair access to foreign markets that the United States offers to its trading partners. My Administration has stepped up its efforts to counter unfair trade practices and to open foreign markets that have raised barriers to American products. We will continue to do so.

Today, we are preparing for a new round of multilateral trade negotiations. Through those negotiations we will continue to press for open markets for the products of our manufacturing firms. We will also press for greater market access for the products of America's farms and the products of our fast-growing service industries.

In multilateral negotiations, and at home, we will continue to resist proposals for protectionist measures for the simple reason, proved by history and bitter experience, that they just do not work.

Export expansion also requires a sound, stable dollar and reliable exchange rates around the world. We have already achieved a great deal through our efforts to coordinate economic and monetary policies with our major trading partners. Upward revaluations of foreign currencies against the dollar are making American products more competitive around the world. We are continuing our policy discussions with America's major trading partners to enhance America's trading opportunities.

Government can only set the stage for increased trading. It is the job of American private enterprise to make trade grow. Over the past year, government actions have vastly improved the climate for trade. Aggressive exporters in our business community are calling today's trading climate an opportunity for a "renaissance in American competitiveness." Translating that golden opportunity into a reality depends upon all of America's businesses.

Given fair competitive conditions, American industry and labor can and will meet this challenge with renewed determination—reaching out to fulfill our potential as a great exporting nation.

NOW, THEREFORE, I, RONALD REAGAN, President of the United States of America, by virtue of the authority vested in me by the Constitution and the laws of the United States, do hereby proclaim the week beginning May 18, 1986, as World Trade Week. I invite the people of the United States to join in appropriate observances to reaffirm the enormous potential of international trade for creating jobs and stimulating economic activity here while it helps to generate prosperity for all.

IN WITNESS WHEREOF, I have hereunto set my hand this nineteenth day of May, in the year of our Lord nineteen hundred and eighty-six, and of the Independence of the United States of America the two hundred and tenth.

Ronald Reagan

[FR Doc. 86-11573
Filed 5-19-86; 4:12 pm]
Billing code 3195-01-M

Rules and Regulations

Federal Register
Vol. 51, No. 98
Wednesday, May 21, 1986

This section of the FEDERAL REGISTER contains regulatory documents having general applicability and legal effect, most of which are keyed to and codified in the Code of Federal Regulations, which is published under 50 titles pursuant to 44 U.S.C. 1510.
The Code of Federal Regulations is sold by the Superintendent of Documents. Prices of new books are listed in the first FEDERAL REGISTER issue of each week.

OFFICE OF PERSONNEL MANAGEMENT

5 CFR Part 532

Prevailing Rate Systems

AGENCY: Office of Personnel Management.

ACTION: Final rule.

SUMMARY: The Office of Personnel Management (OPM) is amending its regulations governing the submission and adjudication of job-grading appeals under the Federal Wage System. These revisions will correct erroneous information in current regulations regarding available avenues of appeal. These revisions are the result of a Merit Systems Protection Board (MSPB) decision clarifying the job-grading appeals adjudication authority.

EFFECTIVE DATE: June 20, 1986.

FOR FURTHER INFORMATION CONTACT: Lee Hall, (202) 632-7830.

SUPPLEMENTARY INFORMATION: Notice of the proposed regulation changes governing the submission and adjudication of job-grading appeals under the Federal Wage System was published on September 16, 1985 (50 FR 37537). The public comment period ended November 15, 1985. We received two timely written comments—one from an employee organization and one from an individual. Other than several editorial changes, our proposed rules were not changed as a consequence of the issues raised by these comments.

1. *Concern was expressed that deletion of the reference to 5 CFR Part 532 would confuse employees and managers regarding the right of appeal to MSPB for actions which do not comport with law. It was suggested that further explanation be provided concerning appeals to MSPB.* We have revised § 532.701 to emphasize that the filing of a job-grading appeal does not negate any other employee appeal or grievance rights. We will further amplify an employee's appeal rights to MSPB in our guidance material published in FPM Supplement 532-1.

2. *A question was raised regarding the need to retain the 15-calendar day requirement for filing an appeal in order to be entitled to retroactive corrective action under § 532.703(b)(3). This was believed to be unnecessary now that grade and pay retention applies to nearly everyone.* The 15-calendar day requirement is retained to protect the entitlement to retroactive corrective action for employees who are not eligible for grade or pay retention.

E.O. 12291, Federal Regulation

I have determined that this is not a major rule as defined under section 1(b) of E.O. 12291, Federal Regulation.

Regulatory Flexibility Act

I certify that these regulations will not have a significant economic impact on a substantial number of small entities because they are changes which will affect only employees of the Federal Government.

List of Subjects in 5 CFR Part 532

Administrative practice and procedure, Government employees, Job-grading appeals.

U.S. Office of Personnel Management.

Constance Horner,

Director.

PART 532—PREVAILING RATE SYSTEMS

Accordingly, OPM is amending 5 CFR Part 532 as follows:

1. The authority citation for Part 532 is revised as set forth below and the authority citation following § 532.707 is removed:

Authority: 5 U.S.C. 5343, 5346; Section 532.707 also issued under 5 U.S.C. 552, Freedom of Information Act, Pub. L. 92-502.

2. Sections 532.701 and 532.703(b)(3) and (b)(8) are revised to read as follows:

§ 532.701 General.

A prevailing rate employee may at any time appeal the occupational series, grade, or title to which the employee's job is assigned, but may not appeal under this subpart the standards established for the job, nor other matters such as the accuracy of the job description, the rate of pay, or the propriety of a wage schedule rate. The filing of a job-grading appeal does not negate any other appeal or grievance rights which may be available under applicable law, rule, regulation, or negotiated agreement.

§ 532.703 Agency review.

* * * * *

(b) * * *

(3) An application may be filed at any time. However, when the application involves a downgrading or other job-grading action which resulted in a reduction in grade or loss or pay, in order to be entitled to retroactive corrective action, an employee must request a review under the provisions of this subpart within 15 calendar days of the effective date of the change to lower grade.

* * * * *

(8) When an employee applies for a review of a downgrading or other job-grading action that resulted in a reduction of pay, and the decision of an agency reverses in whole or in part the downgrading or other job-grading action, the effective date of that decision shall be retroactive to the effective date of the action being reviewed when the initial application to the agency was submitted in accordance with paragraph (b)(3) of this section. However, when the agency decision raises the grade or level of the job above its grade or level immediately preceding the downgrading, retroactivity shall apply only to the extent of restoration to the grade or level immediately preceding the downgrading.

* * * * *

3. Section 532.705(d) is revised to read as follows:

§ 532.705 Appeal to the Office of Personnel Management.

* * * * *

(d) The Office of Personnel Management shall notify the employee and the agency in writing of its decision. The effective date of a change in the series, title and grade of a job directed by the Office of Personnel Management shall be specified in the decision of the Office of Personnel Management, computed from the date the employee filed the application with the agency, and determined under § 532.703(b)(10). However, when the decision will result in a downgrading or other job-grading

action that will reduce the pay of the incumbent of the job, the effective date may not be set earlier than the date on which the decision can be effected in accordance with procedures required by applicable law and regulation.

* * * * *

4. Also in § 532.705, the introductory text of paragraph (g) is revised to read as follows:

* * * * *

(g) The Director of the Office of Personnel Management may, at his or her discretion, reopen and reconsider any previous decision when the party requesting reopening submits written argument or evidence which tends to establish that:

* * * * *

[FR Doc. 86-11470 Filed 5-20-86; 8:45 am]
BILLING CODE 6325-01-M

5 CFR Part 890

Federal Employees Health Benefits Program

AGENCY: Office of Personnel Management.

ACTION: Final rule.

SUMMARY: The Office of Personnel Management (OPM) is issuing revised regulations to improve the administrative process used by the Federal Employees Health Benefits Program (FEHBP) to resolve disputed health insurance claims. These regulations will strengthen OPM's control over the disputed claims process and will result in more efficient plan and OPM reviews.

EFFECTIVE DATE: June 20, 1986.

FOR FURTHER INFORMATION CONTACT: Mary Ann Mercer, (202) 632-0098.

SUPPLEMENTARY INFORMATION: On December 28, 1984, OPM published proposed rules in the **Federal Register** [49 FR 50404] with a request for comments from interested parties before publication as final regulations. OPM received eight comments, two from Government agencies, one from an FEHBP plan, one from an association representing retired Federal employees, one from an association of nurses, one from an association of Federal health organizations, and two from private individuals. The responses were in favor of an improved administrative process for resolving disputed claims and several offered suggestions concerning specific areas of the review process.

5 CFR 890.105

One comment concerned the change in the section heading for 5 CFR § 890.105 from "Review of claim for payment or service" to "Filing claims for payment or service." The commenter prefers the original title to the new one. While either title would be acceptable, we favor casting the title in terms of the action precipitating carrier/OPM review, that is, the enrollee's filing of a claim, request for reconsideration, and/or request for review by OPM.

Paragraph 890.105(b)

One comment concerned the timeframe for enrollees to provide additional information requested by the plan (60 days). The commenter believes that the regulations should provide for an extension of this timeframe if the claimant can show good cause for exceeding the time limit. We agree and have added a provision in the regulations which permits an extension of the timeframe if a compelling cause can be shown for doing so [890.105(b)(4)].

Paragraph 890.105(c)

One comment concerned the procedure for requesting reconsideration of a denied claim [§ 890.105(c)(1)]. The provision requires the enrollee to make the request in writing and give the reason he or she believes the claim should not have been denied. The respondent is concerned that the request for review may be rejected if the enrollee does not adequately explain why the claim should have been paid. The section referenced pertains to plan review, not review by OPM, as noted by the commenter. The provision in question has existed for some time and our experience shows that most enrollees are able to communicate why they think a claim should have been honored. Neither the plan nor OPM denies claims solely because they are inadequately explained. The provision is intended as procedural guidance for the enrollee and does not require denial of a claim if the enrollee cannot explain why he or she believes the claim should have been paid.

Two comments concerned the requirement that the enrollee's request for OPM review be received by OPM within 90 days after the date of the plan's reaffirmation of the original denial [890.105(c)(3)]. One respondent believes that a 90-day period is too short and suggests that the 90-day period begin upon receipt of the notice by the enrollee rather than from the date of the plan's notice to the enrollee that the denial was affirmed. The other respondent believes that the regulations should provide for an extension of the timeframe if the claimant can show good cause for exceeding the time limit. While we believe the proposed 90-day timeframe allows sufficient time for the enrollee to submit a request for review to OPM, we acknowledge that unexpected delays may occur. Consequently, we have added a provision which allows OPM to extend the time limit for a request for OPM review when the enrollee can prove that circumstances beyond his or her control prevented timely submission of the request [§ 890.105(d)(1)].

Paragraph 890.105(d)

With respect to procedures for requesting OPM review, one respondent stated that the 120-day timeframe is ambiguous [§ 890.105(d)(1)(ii)]. Minor editorial changes made to the final regulation respond to this concern. The countdown on the 120-day opportunity for seeking OPM review begins with the ". . . date of the enrollee's timely request for reconsideration by the plan. . . ." Absent regulatory requirements governing mailing procedure, the filing date of the enrollee's request is the date of the enrollee's letter.

The same respondent believes that the 120-day timeframe for requesting OPM review should be extended to allow the plan more time to reconsider the denied claim and to allow the enrollee more time to receive a reply from the plan or to request OPM review based on the plan's failure to act on the request for reconsideration or a submission of additional evidence. None of the FEHB plans informed OPM that they anticipated any problems with the timeframes for processing requests for reconsideration. We have, though, amended the regulation to extend the timeframe for enrollees to request OPM review in cases where additional information is requested by the plan. The final regulation specifies that when a plan has failed to respond to an enrollee within the timeframes specified, the enrollee may request OPM review within 120 days from either the date the enrollee submits a timely request to the plan for reconsideration, or the date the enrollee is notified that the plan is requesting additional information.

Another commenter noted that enrollees have no notice other than that contained in the regulations of the availability of OPM review. OPM has resolved this problem by amending the health benefit plan brochures to include notification of review by OPM.

One respondent commented that the regulations should clarify paragraphs 890.105(d)(1) (i) and (ii) to state that the applicable timeframe for requesting OPM review is the later of (i) 90 days

after the date of the plan's notice to the enrollee that the denial was affirmed; or (ii) within 120 days after the enrollee files a timely request for reconsideration by the plan. Such a statement would be erroneous. When a plan receives a reconsideration request, it has 30 days, under section 890.105(b)(2), to (1) reaffirm its previous denial; (2) request additional information needed to make a decision; or (3) pay the claim. If the plan affirms the initial denial, the 90-day right to OPM review commences with the date of the plan's notice to the enrollee which may occur less than 30 days after the enrollee's reconsideration request. A plan's failure to respond to a request for reconsideration constitutes a constructive affirmation of the previous denial after 30 days, which then activates the 90-day period for requesting OPM review. Accordingly, the latter-case enrollee has a full 120 days from the time a reconsideration request is filed with the plan during which to request a review by OPM. The regulatory provision should remain unchanged.

One respondent commented that paragraph 890.105(d) does not explicitly state that OPM will review the evidence needed to make a decision. Paragraph 890.105(d)(2) specifies the types of information OPM may request for its review and states that OPM "in reviewing a claim . . ." will "obtain any other information as may . . . be required to make a determination." If the information requested is needed to make a determination, then it must of necessity be reviewed before a determination may be made. We believe that it would be redundant to state that OPM will review the information needed to make a decision on the claim.

Another commenter believes that, in requesting additional information necessary to make its decision, OPM may unreasonably delay its review. Specifically, the commenter cites OPM's procedure for requesting Privacy Act releases and additional information from enrollees as promoting delays in processing. The respondent suggests that (1) the plan, if it reaffirms its denial, forward a Privacy Act release to the enrollee at the time it informs the enrollee of the right to request OPM review; or (2) OPM extend its processing time from 30 to 40 days and ensure that all necessary releases and information are requested and a determination made within that timeframe.

Privacy Act release forms must be completed by health care recipients only if the individual requesting review of, or information regarding, the claim is not the same person as the patient with respect to whom the claim was made or the patient's legal guardian. Accordingly, we do not believe the Privacy Act release form should be used routinely as a time-saving instrument. Regarding the second alternative, because OPM has no way of controlling responses from all possible sources of claim information (e.g., all providers of services, independent experts), we do not believe that it is appropriate to set a time limit on OPM decisions until all information necessary to make a determination is received.

Paragraph 890.105(d)(2)(ii) enables OPM to obtain an advisory opinion from an independent physician, if needed. One respondent commented that OPM should seek a medical and/or legal opinion not only for special cases, but for every claim. We believe that OPM's staff physician and claims reviewers are adequately qualified to review denied claims. Except in the most extraordinary cases, consultation with a medical or legal expert is not required to make a decision.

One comment concerns the provision requiring the plan to release information to OPM within 30 days of OPM's request, unless OPM specifies a different timeframe [§ 890.105(d)(3)]. The respondent would like OPM to drop the provision authorizing a different timeframe and add a provision for default judgment for the enrollee if the plan fails to respond to OPM within the 30-day period. The respondent assumes that this provision is intended exclusively to grant the plans more time to respond. On the contrary, the primary purpose of the provision is to enable OPM to specify a shorter timeframe when desired. The phrase "different time frame" was used rather than the term "shorter time frame" because, on rare occasions, a plan may have a valid reason for requiring additional time.

Two respondents believe that OPM should advise the enrollee when it requests additional information from the plan, that the plan should be required to notify the enrollee when it submits the information to OPM, and that the enrollee should be allowed a period of time to respond to the plan's submission.

Before reviewing a plan's reaffirmation of a denied claim, OPM routinely requests the patient to sign a medical release form giving OPM access to medical information related to the claim. This form also notifies the enrollee that information is being requested from the plan. Concerning the suggestion that the plan notify the enrollee when it submits the information requested to OPM and allow the enrollee 10 days to respond, we do not believe that the claims review process should be encumbered by requiring yet another communication from the enrollee. Accordingly, requiring the plan to notify the enrollee of its submission to OPM would be superfluous.

General

One commenter suggested that OPM conform its timeframes to those required for claims processing under the Employees Retirement Income Security Act (ERISA). Regulations governing the two programs focus on different aspects of the review process because the programs differ in their purpose and requirements. After reviewing the disputed claims process and considering the ERISA time standards, we have concluded that the timeframes as proposed by OPM are best suited to the requirements of the FEHBP disputed claims process. Therefore, we have not attempted to adopt the time standards required under ERISA.

Another general comment concerns the review of claims by the courts. The respondent suggests that OPM permit the enrollee to request a direct legal review by the courts in lieu of following administrative procedures for resolution of disputed claims. In the employee benefits area, OPM has traditionally argued for dismissal of court cases when the individual has failed to exhaust administrative remedies. The purposes of OPM's disputed claims review procedures is to assist enrollees in avoiding the costs and time delays associated with legal proceedings. Consequently, we do not favor a regulation calling for review by the courts before all administrative remedies have been exhausted.

Finally, OPM received a comment on the possibility of OPM's negotiating "deferral" arrangements with State insurance commissioners under which they would process disputed claim appeals. Section 8902(j) of title 5, United States Code, gives OPM authority to review carrier decisions on disputed claims and to reverse a carrier's decision if "the Office [OPM] finds" that the carrier has not followed the terms of the contract. We need not determine the issue of whether delegation of this authority is possible under the statute at this time because our experience with the program indicates that the best way to maintain benefit consistency is to have OPM carry out the review.

To ensure that enrollees are aware of what timeframes apply to consideration of a particular disputed claim, we have added a provision for the plan to notify the enrollee if it requests additional

information from a provider [§ 890.105(b)(2)].

OPM has taken the opportunity in these final regulations to add clarifying language to § 890.107 concerning the type of legal actions that may be brought against OPM. This section of the regulations gives notice that legal action may be brought against OPM for the review of the legality of OPM's regulations or of a decision made by OPM. We are adding a statement to this provision to make it clear that legal action may not be brought against OPM by an enrollee solely because OPM upholds a health plan's denial of a claim for benefits. The authority for waiving the general notice of proposed rulemaking for this portion of the regulations is section 553(b)(3)(A) of title 5 of the United States Code which exempts interpretive rules from public comment.

Upon consideration of the comments received and a review of the proposed regulations, we have made minor technical and editorial changes which, among other things, clarify that OPM's function is not to adjudicate disputed claims but to review carrier decisions on disputed claims. We have also added the phrase "or provider" to paragraph 890.105(b)(2) to make clear that information requested by a plan may be requested from the provider as well as from the enrollee.

E.O. 12291, Federal Regulation

I have determined that this is not a major rule as defined under section 1(b) of E.O. 12291, Federal Regulation.

Regulatory Flexibility Act

I certify that these regulations will not have a significant economic impact on a substantial number of small entities because the regulations merely amend administrative procedures currently in use by FEHBP plans and OPM.

List of Subjects in 5 CFR Part 890

Administrative practice and procedure, Claims, Government employees, Health insurance, Retirement.

U.S. Office of Personnel Management.

Constance Horner,

Director.

Accordingly, OPM is amending Part 890 as follows:

1. The authority citation for Part 890 continues to read as set forth below:

Authority: 5 U.S.C. 8913; Sec. 890.102 also issued under 5 U.S.C. 1104 and sec. 3(5) of Pub. L. 95-454, 92 Stat. 1112; Sec. 890.301 also issued under 5 U.S.C. 8905(b); Sec. 890.302 also issued under 5 U.S.C. 8901(5) and 5 U.S.C.8901(9); Sec. 890.701 also issued under 5 U.S.C. 8902(m)(2); Subpart H also issued under Title I of Pub. L. 98-615, 98 Stat. 3195, and Title II of Pub. L. 99-251.

2. Section 890.101 is amended by redesignating paragraphs (a)(4) through (a)(11) as (a)(5) through (a)(12) and adding a new paragraph (a)(4) to read as follows:

§ 890.101 Definitions; time computations.

(a) * * *

(4) "Claim" means a request for (i) payment of a health-related bill; or (ii) provision of a health-related service or supply.

* * * * *

3. Section 890.105 is revised to read as follows:

§ 890.105 Filing claims for payment or service.

(a) *General.* Each health benefits plan adjudicates claims filed under the plan. An enrollee must initially submit all claims to the health benefits plan in which he or she is enrolled. If the plan denies a claim, the enrollee may ask the plan to reconsider the denial. If the plan affirms its denial or fails to respond as required by paragraph (b) of this section, the enrollee may ask OPM to review the claim.

(b) *Timeframes for reconsidering a claim.* (1) The plan must reconsider its initial denial of a claim (or a portion of a claim) when an enrollee submits a written request for reconsideration to the plan within 1 year after the date of the notice to the enrollee that the claim was denied.

(2) Within 30 days after the date of receipt of a timely-filed request for reconsideration, the plan must (i) affirm the denial in writing to the enrollee; (ii) pay the bill or provide the service; or (iii) request from the enrollee or provider additional information needed to make a decision on the claim. If a plan requests additional information from a provider, it must simultaneously notify the enrollee of the information requested. When additional information is requested, the plan must, within 30 days after the date the information is received, affirm the denial in writing to the enrollee or pay the bill or provide the service. If the enrollee or the provider does not respond within 60 days after the date of the plan's notice requesting additional information, the plan will make its decision based on the evidence it has. The plan must then send written notice to the enrollee of its decision on the claim. If the plan fails to act within 30 days after the enrollee's request for reconsideration or the plan's receipt of additional information, the enrollee may request OPM review as provided in paragraph (3) of this section.

(3) If a plan either affirms its denial of a claim or fails to respond to an enrollee's written request for reconsideration within 30 days after the date it receives the request or within 30 days after the date it receives additional information requested, the enrollee may write to OPM and request that OPM review the plan's decision. The enrollee must submit the request for OPM review within the timeframes specified in paragraph (d)(1) of this section.

(4) A plan may extend the time limit for an enrollee's submission of additional information to the plan when the enrollee shows he or she was not notified of the time limit or was prevented by circumstances beyond his or her control from submitting the additional information.

(c) *Information required to process requests for reconsideration.*

(1) When requesting the plan to reconsider a claim, the enrollee must put the request in writing and give the reason the claim should not have been denied.

(2) If the plan needs additional information from the enrollee to make a decision, it must (i) specifically identify the information needed; (ii) state the reason the information is required to make a decision on the claim; (iii) specify the timeframe (60 days after the date of the plan's request) for submitting the information; and (iv) state the consequences of failure to respond within the time limit specified, as set out in paragraph (b)(2) of this section.

(3) If the plan affirms the initial denial, it must provide written notice to the enrollee. This notice must inform the enrollee of (i) the specific and detailed reasons for the denial; (ii) the enrollee's right to request a review by OPM; and (iii) the requirement that requests for OPM review must be received within 90 days after the date of the plan's notice of denial.

(d) *OPM review.* (1) OPM must accept a request for review that is received (i) within 90 days after the date of the plan's notice to the enrollee that the denial was affirmed; or (ii) if the plan fails to respond to the enrollee as provided in paragraph (b)(2) of this section, within 120 days after the date of the enrollee's timely request for reconsideration by the plan or the date the enrollee is notified that the plan is requesting additional information. OPM may extend the time limit for an enrollee's request for OPM review when the enrollee shows he or she was not notified of the time limit or was prevented by circumstances beyond his or her control from submitting the

request for OPM review within the time limit.

(2) In reviewing a claim denied by a plan, OPM may (i) request that the enrollee submit additional information; (ii) obtain an advisory opinion from an independent physician; or (iii) obtain any other information as may in its judgment be required to make a determination. (OPM's request for an advisory opinion will not identify the enrollee or patient, the plan, or any medical institutions or physicians involved in the claim.)

(3) When OPM requests information from a plan, the plan must release the information within 30 days after the date of OPM's written request unless a different timeframe is specified by OPM in its request. Any evidence submitted by the enrollee or by the plan for review of the denied claim will be held as privileged information and will be reviewed only by persons having official need to see it.

(4) Within 30 days after receipt of the necessary evidence, OPM will give a written notice of its decision to the enrollee and the plan.

4. Section 890.107 is revised to read as follows:

§ 890.107 Legal actions.

An action to compel enrollment of an employee or annuitant not excluded by § 890.102(c) should be brought against the employing office. An action to recover on a claim for health benefits should be brought against the carrier of the health benefits plan. An action to review the legality of OMP's regulations under this part or of a decision made by OPM should be brought against the Office of Personnel Management, Washington, DC 20415. However, an enrollee's dispute of an OPM decision solely because it concurs in a health plan carrier's denial of a claim is not a challenge to the legality of OPM's decision. Therefore, any subsequent litigation to recover on the claim should be brought against the carrier, not against OPM.

[FR Doc. 86-11471 Filed 5-20-86; 8:45 am]

BILLING CODE 6325-01-M

DEPARTMENT OF AGRICULTURE

Agricultural Marketing Service

7 CFR Parts 915 and 944

Avocados Grown in South Florida and Imported Avocados; Maturity Requirements

AGENCY: Agricultural Marketing Service, USDA.

ACTION: Interim final rule with request for comments.

SUMMARY: This interim final rule establishes minimum maturity requirements for shipments of fresh avocados grown in South Florida, and for avocados imported into the United States. The purpose of instituting maturity regulations is to prevent shipments of immature avocados to the fresh market. Providing fresh markets with mature fruit is important in creating and maintaining consumer satisfaction and sales. Such action is designed to promote orderly marketing conditions for avocados in the interest of producers and consumers. The requirements on imported avocados are required under section 8e of the Agricultural Marketing Agreement Act of 1937.

DATES: Section 915.331 Florida Avocado Maturity Regulation becomes effective May 21, 1986. Section 944.30 Avocado Import Maturity Regulation becomes effective May 27, 1986. Comments which are received by June 20, 1986 will be considered prior to issuance of the final rule.

ADDRESS: Interested persons are invited to submit written comments concerning this action. Comments should be sent in duplicate to the Docket Clerk, F&V, AMS, Room 2085-S, U.S. Department of Agriculture, Washington, DC 20250. Comments should reference the date and page number of this issue of the **Federal Register** and will be made available for public inspection at the office of the Docket Clerk during regular business hours.

FOR FURTHER INFORMATION CONTACT: Ronald L. Cioffi, Chief, Marketing Order Administration Branch, F&V, AMS, USDA, Washington, DC 20250. Telephone: (202) 447-5697.

SUPPLEMENTARY INFORMATION: This interim final rule has been reviewed under Secretary's Memorandum 1512-1 and Executive Order 12291, and has been designated a "non-major" rule.

Pursuant to requirements set forth in the Regulatory Flexibility Act (RFA), the Administrator of the Agricultural Marketing Service has determined that this action will not have significant economic impact on a substantial number of small entities.

The purpose of the RFA is to fit regulatory actions to the scale of business subject to such actions in order that small businesses will not be unduly or disproportionately burdened. Marketing orders issued pursuant to the Agricultural Marketing Agreement Act, and rules issued thereunder, are unique in that they are brought about through group action of essentially small entities for their own behalf. Thus, both statutes have small entity orientation and compatibility.

This action establishes minimum maturity requirements applicable to fresh shipments of avocados grown in South Florida and imported avocados. These requirements are intended to prevent the shipment of immature avocados to improve buyer confidence in the marketplace.

It is estimated that about 34 handlers of avocados grown in South Florida are currently subject to regulation under the marketing order for South Florida avocados and that about 20 importers of avocados will be subject to this action under the avocado import regulation during the course of the current season and that the great majority of these groups may be classified as small entities. While regulations issued under the order and corresponding import requirements impose some costs on affected persons and the number of such persons may be substantial, the added burden on small entities, if present at all, is not significant.

The Florida avocado maturity regulation is issued under the marketing agreement, and Order No. 915, both as amended (7 CFR Part 915), regulating the handling of avocados grown in South Florida. The agreement and order are effective under the Agricultural Marketing Agreement Act of 1937, as amended (7 U.S.C. 601-674). The maturity requirements applicable to Florida avocado shipments were unanimously recommended by the Avocado Administrative Committee, at its April 9, 1986, meeting. The committee works with the Department in administering the marketing agreement and order program.

The Florida avocado maturity regulation is prescribed in § 915.331 which establishes maturity requirements for fresh shipments of Florida avocados for the 1986-87 season. These maturity requirements prescribe minimum weights or diameters for specified time periods during the shipping season for 60 varieties and 2 seedling types of avocados grown in Florida. Such requirements are used primarily during the first part of the harvest season for each variety to make sure that the avocados are sufficiently mature to complete the ripening process. Another maturity requirement based on the skin color of the fruit is also used to determine maturity for certain varieties of avocados which turn red or purple when mature.

The maturity requirements are designed to make sure that all shipments of Florida avocados are mature, so as to

provide consumer satisfaction essential for the successful marketing of the crop, and to provide the trade and consumers with an adequate supply of mature avocados in the interest of producers and consumers. Similar Florida avocado maturity requirements were in effect during the 1985–86 season under § 915.330 (50 FR 21033, 28556). These requirements expired April 30, 1986. A minimum grade requirement of U.S. No. 2 is currently in effect on a continuous basis for Florida avocados under § 915.306 (50 FR 21031).

The Avocado Administrative Committee estimates fresh Florida avocado shipments at 1,200,000 bushels (55 pounds net weight) during the 1986–87 season compared with fresh shipments of 1,110,130 bushels shipped in 1985–86, 1,149,017 bushels in 1984–85, and 1,036,582 bushels in 1983–84. The 1986–87 season Florida avocado crop is expected to begin with light shipments of early varieties on or about May 21, with heavy shipments following in late June or early July. Florida avocados compete primarily with avocados produced in California, which had shipments of 5,449,307 bushels during the 12-month period ending March 31, 1986. Avocados currently are imported into the United States in relatively small amounts from Chile, and from countries in the Carribean Basin, principally the Bahamas and the Dominican Republic.

The avocado import maturity regulation is issued under section 8e (7 U.S.C. 608e–1) of the Act. Section 8e of the Act requires that when certain domestically produced commodities, including avocados, are regulated under a Federal marketing order, imports of that commodity must meet the same or comparable grade, size, quality, or maturity requirements. The avocado import regulation is prescribed in § 944.30 which establishes minimum maturity requirements for avocados imported into the United States, based on the maturity requirements specified in § 915.331 for avocados grown in Florida. Such maturity requirements based on skin color for certain varieties of avocados which turn to red or purple when mature shall apply to avocados imported from all foreign countries. Such maturity requirements based on minimum weights or diameters for various varieties of avocados for specified shipping periods shall apply to all avocados imported from all foreign countries, except for avocados grown in southern hemisphere countries. The import maturity requirements based on minimum weights or diameters are not applicable to avocados grown in the southern hemisphere countries such as Chile where all imported southern hemisphere avocados have originated to-date, because the avocado growing season and the varietal shipping schedules are different from that in Florida. On the other hand, the import maturity requirements based on minimum weights or diameters are applicable to avocados grown in northern hemisphere countries such as those in the Bahamas and the Dominican Republic where practically all northern hemisphere imported avocados have originated in recent years, because the growing season and the varietal shipping schedules are similar to that in Florida. The import maturity requirements based on skin color shall apply to avocados which turn red or purple when mature grown in both the southern and northern hemispheres, because these varieties turn color when mature regardless of where grown.

Avocado import maturity requirements were in effect during the 1985–86 season under § 944.29 (50 FR 21033, 28556). These requirements expired April 30, 1986. Avocado import grade requirements are currently in effect on a continuous basis under § 944.28 (50 FR 21031). Such grade requirements specify that all avocados imported from all foreign countries must grade at least U.S. No. 2, which requires that the avocados be mature.

After consideration of all relevant matter presented, the information and recommendation submitted by the committee, and other available information, it is found that § 915.331 Florida Avocado Maturity Regulation, and § 944.30 Avocado Import Maturity Regulation, as hereinafter set forth, will tend to effectuate the declared policy of the Act.

It is further found that it is impracticable and contrary to the public interest to give preliminary notice, engage in public rulemaking, and postpone the effective date until 30 days after publication in the **Federal Register** (5 U.S.C. 553), because of insufficient time between the date when information became available upon which this interim final rule is based and the effective date necessary to effectuate the declared policy of the Act. Shipments of Florida avocados are expected to begin on or about May 21, 1986, and the regulation should be in effect by such date to prevent immature fruit from being shipped. Interested persons were given an opportunity to submit information and views on the maturity requirements for Florida avocados at a public meeting at which the committee unanimously recommended that the specified requirements be implemented. Florida avocado handlers have been apprised of the Florida avocado maturity regulation designed to cover all 1986–87 season shipments and need no advance notice to plan their operations. The avocado import requirements are mandatory under § 8e of the Act, and the required 3 days notice will be provided. The rule provides a 30-day comment period. All comments received will be considered prior to finalization of this rule.

List of Subjects

7 CFR Part 915

Marketing agreements and orders, Avocados, Florida.

7 CFR Part 944

Food Grades and standards, Imports, Avocados.

1. The authority citation for 7 CFR Parts 915 and 944 continues to read as follows:

Authority: Secs. 1–19, 48 Stat. 31, as amended; 7 U.S.C. 601–674.

2. New §§ 915.331 and 944.30 are added to read as follows: (§§ 915.331 and 944.30 expire April 30, 1987, and will not be published in the annual Code of Federal Regulations).

PART 915—AVOCADOS GROWN IN SOUTH FLORIDA

§ 915.331 Florida avocado maturity regulation.

(a) During the period May 21, 1986, through April 30, 1987, no handler shall handle any variety of avocados grown in the production area unless:

(1) Any portion of the skin of the individual avocados has changed to the color normal for that fruit when mature for those varieties which normally change color to any shade of red or purple when mature, except for the Linda variety; or

(2) Such avocados meet the minimum weight or diameter requirements for the specified effective periods for each variety listed in the following TABLE I: *Provided*, That avocados may not be handled prior to the earliest date specified in column 2 of such table for the respective variety: *Provided further*, That up to a total of 10 percent, by count of the individual fruit in each lot may weigh less than the minimum specified or be less than the specified diameter, except that no such avocados shall be over 2 ounces lighter than the minimum weight specified for the variety: *Provided further*, That up to double such tolerance shall be permitted for fruit in an individual container in a lot.

TABLE I

Avocado variety	Effective period		Minimum size	
	From—	Through—	Weight, (ounces)	Diameter, (inches)
Kosel	05-21-86	06-03-86	16	
	06-04-86	06-17-86	13	
Arue	05-21-86	06-03-86	16	
	06-04-86	07-08-86	14	3 3/16
Donnie	05-28-86	06-10-86	16	3 5/16
	06-11-86	07-08-86	14	3 5/16
Dr. Dupuis No. 2	06-04-86	06-17-86	16	3 9/16
	06-18-86	07-08-86	14	3 7/16
	07-09-86	07-22-86	12	3 3/16
Fuchs	06-11-86	06-24-86	14	3 3/16
	06-25-86	07-08-86	12	3
K-5	06-18-86	07-01-86	18	3 5/16
	07-02-86	07-15-86	14	3 3/16
Hardee	06-18-86	06-24-86	18	3 5/16
	06-25-86	07-01-86	16	3 3/16
	07-02-86	07-22-86	14	3 1 5/16
West Indian seedling [1]	06-25-86	07-22-86	18	
	07-23-86	08-26-86	16	
	08-27-86	09-23-86	14	
Pollock	06-25-86	07-08-86	18	3 1 1/16
	07-09-86	07-22-86	16	3 7/16
	07-23-86	08-05-86	14	3 5/16
Simmonds	06-25-86	07-08-86	16	3 9/16
	07-09-86	07-22-86	14	3 7/16
	07-23-86	08-05-86	12	3 1/16
Nadir	06-25-86	07-01-86	14	3 3/16
	07-02-86	07-08-86	12	3 1/16
	07-09-86	07-22-86	10	2 1 5/16
Gorham	07-09-86	07-22-86	29	4 5/16
	07-23-86	08-19-86	27	4 3/16
Day	07-09-86	07-22-86	14	3 3/16
	07-23-86	08-19-86	10	2 1 3/16
Reuhle	07-09-86	07-15-86	18	3 1 1/16
	07-16-86	07-22-86	16	3 9/16
	07-23-86	08-05-86	14	3 7/16
	08-06-86	08-12-86	12	3 5/16
	08-13-86	08-19-86	10	3 3/16
Peterson	07-16-86	07-22-86	14	3 9/16
	07-23-86	07-29-86	12	3 5/16
	07-30-86	08-12-86	10	3 3/16
Biondo	07-16-86	08-19-86	13	
Bernecker	07-23-86	08-05-86	18	3 9/16
	08-06-86	08-19-86	16	3 5/16
	08-20-86	09-02-86	14	3 1/16
232	07-23-86	08-05-86	14	
	08-06-86	08-19-86	12	
Pinelli	07-23-86	08-05-86	18	3 1 3/16
	08-06-86	08-19-86	16	3 1 9/16
	08-06-86	08-19-86	12	3 7/16
Trapp	07-23-86	08-05-86	14	3 1 9/16
	08-06-86	08-19-86	12	3 7/16
Miguel (P)	07-23-86	08-05-86	22	3 1 3/16
	08-06-86	08-19-86	20	3 1 3/16
	08-20-86	09-02-86	18	3 1 9/16
Nesbitt	07-23-86	08-05-86	22	3 1 3/16
	08-06-86	08-12-86	16	3 5/16
	08-13-86	08-26-86	14	3 3/16
Beta	08-06-86	08-12-86	18	3 5/16
	08-13-86	09-02-86	16	3 5/16
K-9	08-06-86	08-26-86	16	
Tower 2	08-06-86	08-19-86	14	3 9/16
	08-20-86	09-09-86	12	3 1/16
Christina	08-06-86	08-26-86	11	2 1 1/16
Tonnage	08-06-86	08-19-86	16	3 9/16
	08-20-86	08-26-86	14	3 1/16
	08-27-86	09-02-86	12	3
Waldin	08-06-86	08-19-86	16	3 9/16
	08-20-86	09-02-86	14	3 7/16
	09-03-86	09-16-86	12	3 1/16
Lisa (P)	08-13-86	08-19-86	12	3 5/16
	08-20-86	08-26-86	11	3
Catalina	08-20-86	09-02-86	24	
	09-03-86	09-23-86	22	
Pinkerton (CP)	08-20-86	09-02-86	13	
	09-03-86	09-16-86	11	
	09-17-86	09-30-86	9	
Fairchild	08-20-86	09-02-86	16	3 1 9/16
	09-03-86	09-16-86	14	3 7/16
	09-17-86	09-23-86	12	3 1/16
Black Prince	09-20-86	09-02-86	28	4 1/16
	09-03-86	09-16-86	23	3 1 1/16
	09-17-86	10-07-86	16	3 9/16
Loretta	09-03-86	09-16-86	30	4 3/16
	09-17-86	10-07-86	26	3 1 5/16
Blair	09-03-86	09-16-86	16	3 5/16
	09-17-86	10-07-86	14	3 3/16
Booth 8	09-03-86	09-23-86	16	3 9/16
	09-24-86	10-07-86	14	3 5/16
	10-08-86	10-21-86	10	3 1/16

TABLE I—Continued

Avocado variety	Effective period		Minimum size	
	From—	Through—	Weight, (ounces)	Diameter, (inches)
Booth 7	09-03-86	09-16-86	18	3 13/16
	09-17-86	09-30-86	16	3 9/16
	10-01-86	10-14-86	14	3 5/16
Booth 5	09-10-86	09-23-86	14	3 5/16
	09-24-86	10-07-86	12	3 5/16
Guatemalan seedling [2]	09-10-86	10-07-86	15	
	10-08-86	12-09-86	13	
Marcus	09-10-86	09-23-86	32	4 13/16
	09-24-86	11-04-86	24	4 5/16
Brooks 1978	09-10-86	09-16-86	12	3 5/16
	09-17-86	09-23-86	10	3 1/16
	09-24-86	10-14-86	8	2 15/16
Collinson	09-17-86	10-14-86	16	3 9/16
Rue	09-17-86	09-23-86	30	4 3/16
	09-24-86	10-07-86	24	3 15/16
	10-08-86	10-21-86	18	3 5/16
Hickson	09-17-86	09-30-86	12	3 1/16
	10-01-86	10-14-86	10	3
Simpson	09-24-86	10-14-86	16	3 5/16
Choquette	10-01-86	10-19-86	28	4 5/16
	10-22-86	11-04-86	24	4 1/16
	11-05-86	11-18-86	20	3 15/16
Winslowson	10-01-86	10-21-86	18	3 15/16
Leona	10-01-86	10-14-86	18	3 9/16
Hall	10-01-86	10-14-86	26	3 15/16
	10-15-86	10-28-86	20	3 5/16
	10-29-86	11-11-86	18	3 5/16
Herman	10-08-86	10-21-86	16	3 5/16
	10-22-86	11-04-86	14	3 5/16
Lula	10-08-86	10-21-86	18	3 1/16
	10-22-86	11-04-86	14	3 5/16
	11-05-86	11-18-86	12	3 3/16
Ajax (B-7)	10-15-86	11-04-86	18	3 15/16
Taylor	10-15-86	10-28-86	14	3 5/16
	10-29-86	11-11-86	12	3 3/16
Booth 3	10-15-86	10-21-86	16	3 5/16
	10-22-86	11-04-86	14	3 5/16
Linda	11-05-86	11-25-86	18	3 13/16
Monroe	11-12-86	11-25-86	26	4 3/16
	11-26-86	12-09-86	24	4 1/16
	12-10-86	12-23-86	20	3 15/16
	12-24-86	01-06-86	16	3 5/16
Booth 1	11-19-86	12-02-86	16	3 13/16
	12-03-86	12-16-86	12	3 5/16
Zio (P)	11-19-86	12-02-86	12	3 1/16
	12-03-86	12-16-86	10	2 15/16
Wagner	11-26-86	12-09-86	12	3 5/16
	12-10-86	12-23-86	10	3 5/16
Brookslate	12-17-86	12-30-86	18	3 13/16
	12-31-86	01-20-87	14	3 5/16
	01-21-87	02-03-87	12	3 5/16
	02-04-87	02-17-87	10	
Meya (P)	12-17-86	12-30-86	13	3 3/16
	12-31-86	01-13-87	11	3
Reed (CP)	01-14-87	01-27-87	14	
	01-28-87	02-10-87	12	
	02-11-87	02-17-87	10	

[1] Avocados of the West Indian type varieties and the West Indian type seedlings not listed elsewhere in Table I.
[2] Avocados of the Guatemalan type varieties, hybrid varieties, and unidentified seedlings not listed elsewhere in Table I.

(b) The term "diameter" means the greatest dimension measured at a right angle to a straight line from the stem to the blossom end of the fruit.

PART 944—FRUITS; IMPORT REGULATIONS

§ 944.30 Avocado import maturity regulation.

(a) Pursuant to section 8e of the Act and Part 944–Fruits; Import Regulations, the importation into the United States of any avocados is prohibited during the period May 27, 1986 through April 30, 1987, unless such avocados meet the requirements specified in § 915.331 Florida Avocado Maturity Regulation, for avocados grown in South Florida under M.O. 915 (7 CFR Part 915): *Provided,* That the minimum weight or diameter maturity requirements for specific time periods for various varieties of avocados specified in paragraph (a)(2) of that section shall not apply to avocados grown in countries in the southern hemisphere. Avocados grown in southern hemisphere countries shall be exempt from the specified minimum weight or diameter maturity requirements, because the avocado growing season and the varietal maturity schedules in the southern hemisphere differ from that in Florida.

(b) The Federal or Federal-State Inspection Service, Fruit and Vegetable Division, Agricultural Marketing Service, United States Department of Agriculture, is designated as the governmental inspection service for certifying the grade, size, quality, and maturity of avocados that are imported into the United States. Inspection by the Federal or Federal-State Inspection Service with evidence thereof in the form of an official inspection certificate, issued by the respective service, applicable to the particular shipment of avocados, is required on all imports. The inspection and certification services will be available upon application in accordance with the rules and regulations governing inspection and certification of fresh fruits, vegetables, and other products (7 CFR Part 51) and in accordance with the regulation designating inspection services and procedure for obtaining inspection and certification (7 CFR Part 944.400).

(c) The term "importation" means release from custody of the United States Customs Service.

(d) Any person may import up to 55 pounds of avocados exempt from the requirements specified in this section.

(e) Any lot or portion thereof which fails to meet the import requirements prior to or after reconditioning may be exported or disposed of under the supervision of the Federal or Federal-State Inspection Service with the costs of certifying the disposal of such lot borne by the importer.

Dated: May 16, 1986.

Joseph A. Gribbin

Director, Fruit and Vegetable Division, Agricultural Marketing Service.

[FR Doc. 86-11442 Filed 5-20-86; 8:45 am]

BILLING CODE 3410-02-M

DEPARTMENT OF JUSTICE

Immigration and Naturalization Service

8 CFR Part 204

Petition to Classify Alien as Immediate Relative of a United States Citizen or as a Preference Immigrant; Filing of Occupational Preference Petitions

AGENCY: Immigration and Naturalization Service, Justice.

ACTION: Final rule.

SUMMARY: This final rule changes the method by which a third preference, sixth preference or nonpreference priority date is established. Under current regulations, in the case of most third or sixth preference visa petitions, the priority date of the visa petition is the date the application for labor certification was accepted for

processing by an office within the employment system of the Department of Labor (DOL). That date establishes the alien's priority date for visa issuance purposes. Many deportable aliens and employers of deportable aliens choose not to file a visa petition with the Immigration and Naturalization Service ("the Service") upon issuance of the labor certification unless and until an immigrant visa is immediately available, in order to avoid making the alien known to the Service. This creates a situation in which the Government is inadvertently encouraging aliens to remain undetected. The final rule corrects this by requiring that unless a visa petition is filed with the Service within 60 days of the issuance of the labor certification, the priority date becomes the date on which the petition is actually submitted to the Service. Furthermore, if a petition is returned for additional information, it must be resubmitted within 60 days or the priority date becomes the date on which it is resubmitted. In this manner, the final rule removes the incentive for deportable aliens to avoid detection and promotes effective enforcement of the Immigration and Nationality Act.

EFFECTIVE DATE: June 20, 1986.

FOR FURTHER INFORMATION CONTACT:

For General Information: Loretta J. Shogren, Policy Directives and Instructions, Immigration and Naturalization Service, 425 I Street, N.W., Washington, D.C. 20536, Telephone: (202) 633-3048

For Specific Information: Michael L. Shaul, Senior Immigration Examiner, Immigration and Naturalization Service, 425 I Street, N.W., Washington, D.C. 20536. Telephone: (202) 633-3240

SUPPLEMENTARY INFORMATION: Under section 212(a)(14) of the Immigration and Nationality Act ("the Act"), 8 U.S.C. 1182(a)(14), certain aliens may not obtain an immigrant visa for entry into the United States to engage in permanent employment unless the Secretary of Labor has issued a labor certification stating that there are not sufficient workers who are able, willing, qualified, and available at the time of application for a visa and admission to the United States and at the place where the alien is to perform the skilled or unskilled labor, and that the employment of these aliens will not adversely affect the wages and working conditions of similarly employed workers in the United States.

There are three alien immigrant classifications which require a labor certification. These are the third and sixth preference and, under various circumstances, nonpreference classifications (sections 203 (a)(3), (a)(6) and (a)(7) of the Act, 8 U.S.C. 1153). For third and sixth preference applicants, labor certification applications are filed by employers with a state employment service office unless the alien's occupation is a Schedule A occupation (already certified by the Secretary of Labor as in short supply in the United States). If a labor certification is issued or the beneficiary's occupation is on Schedule A, the employer (prospective or current) submits an immigrant visa petition to a district office of the Service. Section 203(c) of the Act (8 U.S.C. 1153(c)) provides that visas will be issued under section 203 (a)(1) through (6) to eligible immigrants in the order in which a petition is filed on behalf on each of these immigrants with the Attorney General as provided in section 204 of the Act (8 U.S.C. 1154). If a preference immigrant visa number is immediately available when the petition is approved, the alien beneficiary may be issued an immigrant visa with which to enter the United States for permanent residence, or, under certain circumstances, may be permitted to adjust status to that of a permanent resident while in the United States. If a preference immigrant visa number is not available at the time the petition is approved, the alien's name is instead placed on a waiting list. Petitions are then processed for permanent residence status by date filed. Thus the filing date has come to be known as the "priority date".

Originally the priority date was based strictly on the date the visa petition was filed with the Service. This rule was changed, however, because for a number of years their were varying backlogs and processing times among the offices of the DOL's employment service system. This meant that some alien beneficiaries received much later priority dates than others even though their prospective or current employers had submitted fully documented requests for labor certifications on earlier dates. In order to make the method of assigning priority dates fairer, the Service established the rule that the filing date would be construed as the date a qualified employer with appropriate documentation first submitted an application or petition to a government agency. In circumstances requiring an individual labor certification this means the date the application for a labor certification is accepted into the DOL employment service system. When the alien beneficiary is entitled to a Schedule A labor certification, the priority date is the date the visa petition is filed with the Service.

Congress has set a limitation on the number of immigrants who can enter the United States under the various preference categories. The current numerical limitation for third and sixth preference is 27,000 each, for a total of 54,000 per year. The nonpreference category is allocated unused visa numbers from other preference categories. Because of the heavy demand, visa numbers are unavailable for the nonpreference classification. There is also high demand for visa numbers in the third and sixth preference categories. These numbers are issued in chronological order based upon priority date (the actual or constructed filing date of the visa petition as explained above) and are often oversubscribed.

Because of the unavailability of visa numbers, the Service has noted that an increasing number of aliens work illegally in the United States while they wait for visa numbers to become available. Under current regulations, in some cases, an employer who intends to petition for an alien holds the approved labor certification until the alien's priority date (that is, the constructive date based on filing with the DOL) is reached. During this interim period, which could be as long as several years, the alien works without authority. When the alien's priority date is reached, the petitioner files the visa petition with the required labor certification attached. At that time, the Service first learns that the alien beneficiary has been illegally in the United States for an extended period of time.

To eliminate this abuse, on November 8, 1985 the service published in **Federal Register** at 50 FR 46441 a proposed rule, with a 60 day request for public comment, that would reverse 8 CFR 204 to provide that in the case of a third or sixth preference petition (except for an occupation listed on Schedule A in 20 CFR 656.10), the priority date be construed as being the date the application for labor certification was accepted, provided the petition is filed within 30 days of the approval date of the labor certification. Otherwise, the priority date would be the date the petition is currently filed with appropriate documentation at a Service office. In the case of an occupation listed on Schedule A in 20 CFR 656.10, the filing date of the petition would be the date the petition was properly filed with the appropriate Service office. Furthermore, if the petition must be returned to the petitioner for additional information, an additional 30 calendar

days would be allowed to re-file the petition. If the petition were not refiled within 30 days of the date on which it was returned, the date of resubmission would be the new priority date.

Under the proposed rule, in order to obtain a priority date based on the date the application for a labor certification was accepted for processing by the DOL, the alien beneficiary must be made known to the Service. If the beneficiary was out of status or would go out of status before the priority date is reached, the Service would then have the option of taking appropriate enforcement action. The employer and alien employee who concealed unauthorized employment by delaying the filing of the visa petition would not thereby receive more favorable treatment than an alien who does not engage in unauthorized employment or one who in essence surrenders by having the employer file a petition with the Service at the time a certification is issued.

The public comment period closed on January 7, 1986. The Service received a total of 87 separate written comments regarding the proposed rule, many of which recognized the problems enunciated in the proposed rulemaking and the need for corrective action. Of the 87 submissions, all but two were opposed to the proposal. One of the favorable comments was fully supportive of the proposed rule in both concept and content; the other supported it in concept; but suggested that the time period for submission/resubmission be extended to 60 days. Most of those opposed to the rule based their opposition on multiple reasons.

As a result of our review of the comments, the Service is publishing the proposed rule, with minor revisions, as a final rule. Those revisions are expansion from 30 days to 60 days of the period authorized for submission or resubmission of the petition, and addition of a paragraph limiting applicability of the rule to those cases in which the labor certification is issued on or after the effective date of the change of the regulation.

The commenters addressed six major areas of the proposed rulemaking. A summary of these comments and the Service responses follows:

(1) *Comment:* The time period is too short and does not take into account difficulties which can arise in submitting a visa petition. These difficulties include: (a) Delays in receiving the certification from the DOL (examples cited ranged from several days to as long as six months); (b) problems involved in obtaining documentation from overseas sources; (c) delays in obtaining evaluation of foreign educational credentials; (d) complications caused by the vacation, illness, workload, business trip, and other activities of the petitioner, the beneficiary and/or the attorney. Of those suggesting an alternate time period, seven recommended 60 days, twelve recomended 90 days, five recommended 120 days, one recommended 160 days, and two recommended 180 days.

Response: The Service recognizes that delays can occur in the process of preparing a petition for submission or resubmission, but finds that some commenters overstated the problem. In most instances, the issuance of a labor certification is an extended process taking several months. Judicious use of this time by the petitioner would greatly facilitate the expeditious submission of the petition following issuance of the certification. However, in order to further minimize the difficulties and to enhance the probability of the petitioner's preparing a complete and comprehensive petition, the final rule will allow 60 days for submission or resubmission of the petition instead of the 30 days as proposed.

(2) *Comment:* The rule is unnecessary to promote enforcement goals since the DOL should/does notify the Service directly each time a labor certification is issued. In the interest of government efficiency and public facilitation, it is recommended that the Service and the DOL coordinate activities to achieve the same result in a cheaper and simpler fashion.

Response: Although the DOL's Technical Assistance Guide No. 656 provides for notification to the Service by the certifying officer if he or she believes that an alien is illegally in the United States, the system has not proven itself to be either effective or efficient. The final rule will overcome the deficiencies in the existing system at no cost to the Government and only minor inconvenience to the public.

(3) *Comment:* Aliens who have received labor certifications are filling a need in the United States and should not be "targeted" by the Service for enforcement action. The proposal is contrary to the Service's recent clarification of its views regarding the ability of an alien to maintain nonimmigrant status while intending to immigrate at a later date.

Response: By requiring that aliens make themselves known to the Service, the Service is not necessarily "targeting" them for enforcement action, but is giving itself the option of taking appropriate action. In the case of bona fide nonimmigrants, the Service will adjudicate applications for extension of stay in accordance with relevant law, regulations and policies. In this sense, the final rule enhances, not contradicts, the recent temporary policy guidance alluded to in the comments.

(4) *Comment:* The proposal will be ineffective due to the Service's lack of resources to follow-up on cases and to readily apparent methods of circumventing the proposals.

Response: It is precisely because of the Service's limited resources that it must seek more efficient means of carrying out its mission. By bringing to the surface cases which had previously remained underground, the Service will be in a better position to allocate its resources. Similarly, although there may be ways in which certain employers will utilize aspects of the final rule to their own advantage, the final rule does correct a major flaw in the system which has led to significant abuse.

(5) *Comment:* The proposal will not promote Government efficiency in that it would result in an unnecessary increase in filing of visa petitions as currently many employers and/or employees opt not to follow through after receiving a labor certification due to lack of continued interest or to the availability of other avenues of immigration. Furthermore, it will prevent or discourage concurrent filing of visa petitions and adjustment of status applications; result in duplicate filing of visa petitions when visa numbers become available for those seeking to adjust their status prior to the adjudication of the initial petition; further complicate an already complex adjudication process; and add to the burden of consular officers by requiring re-examination of "stale" approvals.

Response: Although under the final rule there may be a slightly higher percentage of cases in which a petition is filed after receipt of labor certification, the impact will probably be offset by a decrease in the number of labor certifications sought on a purely speculative basis. Likewise, the number of petitions which will be pending at the time a visa number becomes available should actually decrease, since adjudication will have been completed in the majority of cases before visa number eligibility is reached.

(6) *Comment:* The proposal needs further development and clarification. Among those areas which should be addressed are the need for a "grandfather" clause to cover those who have already received labor certification and the need for clarification as to what

is meant by the term "correctly filed with appropriate documentation".

Response: Recognizing the need for a "grandfather" clause, the Service has included an additional paragraph relating to labor certifications issued before the effective date of this rule. It has also reverted to the established language of "properly filed" instead of "correctly filed with appropriate documentation", since the two phrases are basically synonomous and "properly filed" is utilized elsewhere in the section.

In accordance with 5 U.S.C. 605(b), the Commissioner of Immigration and Naturalization certifies that this rule does not have significant economic impact on a substantial number of small entities.

This rule is not a major rule within the definition of section 1(b) of E.O. 12291.

List of Subjects in 8 CFR Part 204

Administrative practice and procedure, Aliens, Petitions.

Accordingly, Chapter I of Title 8 of the Code of Federal Regulations is amended as follows:

PART 204—PETITION TO CLASSIFY ALIEN AS IMMEDIATE RELATIVE OF A UNITED STATES CITIZEN OR AS A PREFERENCE IMMIGRANT

1. The authority citation for Part 204 continues to read as follows:

Authority: Secs. 103, 204, and 212 of the Immigration and Nationality Act, as amended (8 U.S.C. 1103, 1124 and 1182).

2. In § 204.1, paragraph (d)(2) is revised to read as follows:

§ 204.1 Petition.

* * * * *

(d) * * *

(2) *Filing date.*—(i) *Labor certification issued on or after May 21, 1986.* In the case of a third or sixth preference petition (except for an occupation listed in Schedule A), the filing date of the petition within the meaning of section 203(c) of the Act will be the date the application for labor certification was accepted by an office within the employment service system of the Department of Labor, provided the petition is filed with a Service office within 60 calendar days of the date of the approval of the labor certification. If the petition is filed after that time, the filing date will be the date the petition is properly filed at a Service office. In the case of a third or sixth preference petition for an occupation listed in Schedule A, the filing date of the petition will be the date it was properly filed at the Service office. If a petition must be returned to the petitioner for more information, and additional 60 calendar days will be allowed to refile the petition. If the petition is not within 60 calendar days, the subsequent filing date will become the new priority date. This policy applies to petitions supported by both individual and Schedule A labor certifications.

(ii) *Labor certification issued prior to May 21, 1986.* In the case of a third or sixth preference petition (except for an occupation listed in Schedule A), the filing date of the petition within the meaning of section 203(c) of the Act will be the date the request for the certification was accepted for processing by any office within the employment service system of the Department of Labor. In the case of a third or sixth preference petition for an occupation listed in schedule A, the filing date of the petition will be the date it was properly filed with the appropriate Service office.

* * * * *

Dated: May 13, 1986.

Richard E. Norton,

Associate Commissioner, Examinations, Immigration and Naturalization Service.

[FR Doc. 86-11441 Filed 5-20-86; 8: 45 am]

BILLING CODE 4410-10-M

DEPARTMENT OF TRANSPORTATION

Federal Aviation Administration

14 CFR Part 39

[Docket No. 86-NM-117-AD; Amdt. 39-5318]

Airworthiness Directives, Boeing Model 747 Series Airplanes

AGENCY: Federal Aviation Administration (FAA), DOT.

ACTION: Final rule.

SUMMARY: This amendment adds a new airworthiness directive (AD), applicable to certain Boeing Model 747 series airplanes, which requires a one-time inspection and, if necessary, the replacement of certain engine thrust control cables. This AD is prompted by several recent reports of thrust control cable corrosion and breakage at the wing to fuselage pressure seal. In one case, one engine auto-accelerated to beyond the thrust setting of the other engines, due to a broken cable, turning the airplane off the runway, due to asymmetric thrust. Uncommanded thrust, increase or decrease, could adversely affect the controllability of the airplane.

DATE: Effective June 9, 1986.

ADDRESSES: The service bulletin specified in this AD may be otained upon request to the Boeing Commercial Airplane Company, P.O. Box 3707, Seattle, Washington 98124. This document may be examined at the FAA, Northwest Mountain Region, 17900 Pacific Highway South, Seattle, Washington, or the Seattle Aircraft Certification Office, 9010 East Marginal Way South, Seattle, Washington.

FOR FURTHER INFORMATION CONTACT: Mr. Kanji K. Patel, Propulsion Branch, ANM-140S; telephone (206) 431-2973. Mailing address: FAA, Northwest Mountain Region, 17900 Pacific Highway South, C-68966, Seattle, Washington 98168.

SUPPLEMENTARY INFORMATION: The Boeing Company has received several reports of asymmetrical thrust due to broken engine thrust control cables. In one case, it was reported that, upon advancing the thrust levers for initial takeoff roll, one engine auto-accelerated to beyond the thrust setting of the other engines due to a broken cable, turning the airplane off the runway, due to asymmetric thrust. Investigation revealed a broken T1B-3 thrust control cable, due to corrosion at the pressure seal location. Additionally, a maintenance inspection on several other airplanes revealed heavy corrosion, multiple strand breakage, and missing and misaligned pressure seals at the wing to fuselage seal location.

Depending on which thrust control cable breaks, the imbalance preload on the cable loop could cause uncommanded thrust reduction or thrust increase for the affected engine. Uncommanded thrust, increase or decrease, could adversely affect the controllability of the airplane.

Boeing issued Alert Service Bulletin 747-76A2065, dated February 28, 1986, which describes a one-time inspection of all engine thrust control cables at the wing to fuselage pressure seals. The inspection of cables is to detect corrosion and broken cable strands, through the full range of throttle lever movement. Cables with broken strands or corrosion must be replaced with new cables.

Since this condition is likely to exist or develop on other airplanes of this type design, an airworthiness directive (AD) is being issued to require inspection within 10 days after the effective date, and replacement, if necessary, of engine thrust control cables, in accordance with Boeing Alert Service Bulletin 747-76A2065, dated February 28, 1986.

This AD requires operators to report the results of inspections, and the time intervals between inspections, to the FAA. From this data, the FAA will determine if further rulemaking is necessary. Information collection requirements contained in this regulation have been approved by the Office of Management and Budget under the provisions of the Paperwork Reduction Act of 1980 (Pub. L. 96-511) and have been assigned OMB Control Number 2120-0056.

Further, since a situation exists that requires immediate adoption of this regulation, it is found that notice and public procedure hereon are impracticable, and that good cause exists for making this amendment effective in less than 30 days.

The FAA has determined that this regulation is an emergency regulation that is not major under Executive Order 12291. It is impracticable for the agency to follow the procedures of Order 12291 with respect to this rule since the rule must be issued immediately to correct an unsafe condition in the aircraft. It has been further determined that this document involves an emergency regulation under DOT Regulatory Policies and Procedures (44 FR 11034; February 26, 1979). If this action is subsequently determined to involve a significant/major regulation, a final regulatory evaluation or analysis, as appropriate, will be prepared and placed in the regulatory docket (otherwise, an evaluation or analysis is not required).

List of Subjects in 14 CFR Part 39

Aviation safety, Aircraft.

Adoption of the Amendment

PART 39—[AMENDED]

Accordingly, pursuant to the authority delegated to me by the Administrator, the Federal Aviation Administration amends Section 39.13 of Part 39 of the Federal Aviation Regulations as follows:

1. The authority citation for Part 39 continues to read as follows:

Authority: 49 U.S.C. 1354(a), 1421 and 1423; 49 U.S.C. 106(g) (Revised Pub. L. 97-449, January 12, 1983); and 14 CFR 11.89.

2. By adding the following new airworthiness directive:

Boeing: Applies to all Model 747 series airplanes, line number 1 through 607, certificated in any category. To prevent failure of the engine thrust control cable and loss of control of an engine, accomplish the following:

A. Within the next 10 days after the effective date of this AD, unless accomplished within the last 3,000 hours, inspect and, if necessary, replace the engine thrust control cables in accordance with Boeing Alert Service Bulletin 747-76A2065, dated February 28, 1986, or later FAA-approved revision.

B. Inspections and replacement of thrust control cables accomplished in accordance with Boeing Service Letter 747-SL-76-15-A, dated December 19, 1985, are considered equivalent to accomplishing the procedures required by paragraph A, above, except that corroded cables, with or without broken strands, must also be replaced.

C. Report results of inspections and the time intervals between the inspections to the FAA, Northwest Mountain Region, Seattle Aircraft Certification Office, Propulsion Branch, Attention: Mr. Kanji K. Patel, ANM-140S, 17900 Pacific Highway South, C-68966, Seattle, Washington 98168; telephone (206) 431-2973.

D. An alternate means of compliance or adjustment of the compliance time, which provides an acceptable level of safety, may be used when approved by the Manager, Seattle Aircraft Certification Office, FAA, Northwest Mountain Region.

E. Special flight permits may be issued in accordance with FAR 21.197 and 21.199 to operate airplanes to a base for the accomplishment of inspections and/or modifications required by this AD.

All persons affected by this directive who have not already received the appropriate service bulletin from the manufacturer may obtain copies upon request to the Boeing Commercial Airplane Company, P.O. Box 3707, Seattle, Washington 98124. This document may be examined at the FAA, Northwest Mountain Region, 17900 Pacific Highway South, Seattle, Washington, or the Seattle Aircraft Certification Office, 9010 East Marginal Way South, Seattle, Washington.

This amendment becomes effective June 9, 1986.

Issued in Seattle, Washington, on May 14, 1986.

David E. Jones,

Acting Director, Northwest Mountain Region.

[FR Doc. 86-11360 Filed 5-20-86; 8:45 am]

BILLING CODE 4910-13-M

---

14 CFR Part 39

[Docket No. 86-CE-4-AD; Amendment 39-5313]

Airworthiness Directives; British Aerospace Jetstream Model 3101 (Includes Model 3100) Airplanes

AGENCY: Federal Aviation Administration (FFA), DOT.

ACTION: Final rule.

SUMMARY: This amendment adopts a new Airworthiness Directive (AD), AD 85-19-08 applicable to British Aerospace Jetstream Model 3101 (includes Model 3100) airplanes and codifies the corresponding Priority Letter AD issued September 26, 1985, into the **Federal Register.** This AD requires inspection and repair of the forward wing to fuselage attachment fitting pin (spigot) and bushing. The AD is prompted by a report from an operator that the spigot became disengaged from the spigot housing on a BAe 3100 airplane. If left uncorrected, this disengagement could result in loss of control of the airplane.

DATES: Effective Date: May 26, 1986, to all persons except those to whom it has already been made effective by Priority Letter AD from the FAA issued September 26, 1985.

Compliance: As prescribed in the body of the AD.

FOR FURTHER INFORMATION CONTACT: Mr. John Varoli, AEU-100, Brussels Certification Office, Europe, Africa, and Middle East Office, c/o American Embassy, 1000 Brussels, Belgium; Telephone 513.38.30, extension 2710, or Mr. John Dow, ACE-109, Federal Aviation Administration, 601 East 12th Street, Kansas City, Missouri 64106; Telephone (816) 374-6932.

SUPPLEMENTARY INFORMATION: The FAA issued AD 85-19-08 via priority letter on September 26, 1985, because of a reported finding of a disengaged wing to fuselage attachment pin Part No. 13781B7 on a British Aerospace Model 3100 airplane. It was determined that if the pin became disengaged, loss of integrity of the wing front spar could occur and the result would be loss of control. The FAA determined that this is an unsafe condition that may exist in other airplanes of the same type design, thereby necessitating the AD. It was also determined that an emergency condition existed, that immediate corresponding action was required, and that notice and public procedure thereon was impractical and contrary to the public interest. Accordingly, the FAA notified all known registered owners of the affected airplanes by priority letter AD issued September 26, 1985. The AD became effective immediately as to these individuals upon receipt of that letter and is identified as AD 85-19-08. Since the unsafe condition described therein may still exist on other British Aerospace Model 3101 (includes 3100) airplanes, the AD is being published in the **Federal Register** as an amendment to Part 39 of the Federal Aviation Regulations (14 CFR Part 39) to make it effective to all persons who did not receive the priority letter notification. Because a situation still exists that requires the immediate adoption of this regulation it is found that notice and public procedure hereon are

impracticable and contrary to the public interest, and good cause exists for making this amendment effective in less than 30 days.

The FAA has determined that this regulation is an emergency regulation that is not major under section 8 of Executive Order 12291. It is impracticable for the agency to follow the procedures of Order 12291 with respect to this rule since the rule must be issued immediately to correct an unsafe condition in aircraft. It has been further determined that this document involves an emergency regulation under DOT Regulatory Policies and Procedures (44 FR 11034; February 26, 1979). If this action is subsequently determined to involve a significant regulation, a final regulatory evaluation or analysis, as appropriate, will be prepared and placed in the regulatory docket (otherwise, an evaluation is not required). A copy of it, when filed, may be obtained by contacting the Rules Docket at the location under the caption "ADDRESSES."

List of Subjects in 14 CFR Part 39

Air transportation, Aviation safety, Aircraft, Safety.

Adoption of the Amendment

PART 39—[AMENDED]

Accordingly, pursuant to the authority delegated to me by the Administrator, the Federal Aviation Administration amends § 39.13 of Part 39 of the FAR as follows:

1. The authority citation for Part 39 continues to read as follows:

Authority: 49 U.S.C. 1354(a), 1421 and 1423; 49 U.S.C. 106(g) (Revised, Pub. L. 97-449, January 12, 1983); and 14 CFR 11.89.

2. By adding the following new AD:

British Aerospace: Applies to Model 3101 (includes Model 3100) airplanes (serial numbers 601 through 666) certificated in any category.

Compliance: Required within seven days after receipt of this AD unless already accomplished.

To prevent the possibility of wing droop development and structural damage to the forward wing spar fuselage attachment and resulting loss of control of the airplane, accomplish the following:

(a) Remove wing-to-fuselage fairing panels numbers F19 and F20.

(b) Using as a reference BAe Model 3100 Illustrated Parts Catalog, Chapter 57-00-00 Figure 3 wing installation and using a suitable light source, visually inspect and repair as required item number 210 spigot (pin) Part No. 13781B7 (LH and RH), in accordance with the following criteria:

(i) If no gap exists between the spigot flange and the fuselage post, and if the locking bolt, washer and nut (items 205, 200 and 195 respectively) securing the spigot are in position and secure, install panel number F19 and F20 and return the airplane to service.

(ii) If little or no gap exists between the spigot flange and the fuselage post, and if the locking bolt, washer and nut are not secure, prior to further flight accomplish the following:

(A) Remove the loading from the wing to the fuselage joint and push the spigot (pin) into the spigot housing, and

(B) Install the locking bolt (Part No. A102-18D) with the head forward, the nut (Part No. A126 D66) and the washer (Part No. SP124D). Replace panels F19 and F20 and return the airplane to service.

(C) If the locking bolt (Part No. A102-18D) cannot be installed without rotation of the spigot, prior to further flight accomplish the repair procedures described in paragraph (c) of this AD.

(iii) If a large gap exists between the spigot flange and the fuselage post which results in loss of engagement with the spigot housing plate (item 215 LH and 220 RH), prior to further flight accomplish the repair procedures described in paragraph (c) of this AD.

(iv) If other structural deformation or damage is observed relating to improper spigot installation, prior to further flight obtain and accomplish the repair procedures in accordance with paragraph (c) of this AD.

(v) If the fuselage vertical post outboard bushing is found to be displaced, prior to further flight repair in accordance with the instructions in Figure 1 of the British Aerospace Service Bulletin No. 57-A-JA 840917 dated January 25, 1985.

(c) Alternate methods of compliance and repair procedure may be used if approved by either the Manager of the FAA Brussels Aircraft Certification Office, FAA, AEU-100, c/o American Embassy, 1000 Brussels, Belgium, or the Manager of the Small Aircraft Certification Division, FAA, Central Region, ACE-100, 601 East 12th Street, Kansas City, Missouri 64106.

(d) Report, in writing, all defects found to the Manager, Small Aircraft Certification Division, FAA, Central Region, within 48 hours of the inspection. (Reporting approved by the Office of Management and Budget under OMB No. 2120-0056.)

This amendment becomes effective May 26, 1986, as to all persons except those persons to whom it was made immediately effective by Priority Letter AD 85-19-08, issued September 26, 1985, which contained this amendment.

Issued in Kansas City, Missouri, on May 9, 1986.

Edwin S. Harris,

Director, Central Region.

[FR Doc. 86-11353 Filed 5-20-86; 8:45 am]

BILLING CODE 4910-13-M

14 CFR Part 39

[Docket No. 86-CE-10-AD; Amdt. 39-5316]

Airworthiness Directives; Cessna Model T303 Airplanes

AGENCY: Federal Aviation Administration (FAA), DOT.

ACTION: Final rule.

SUMMARY: This amendment adopts a new Airworthiness Directive (AD) AD 86-01-01R1, applicable to Cessna Model T303 airplanes and codifies the corresponding priority letter AD's dated January 2, 1986, and January 17, 1986, into the **Federal Register**. This AD removes approval for flight into known icing conditions for those Model T303 airplanes with icing flight approval. It also adds additional information to the emergency procedures section of the Pilot's Operating Handbook and FAA Approved Airplane Flight Manual to aid in the event of an inadvertent icing encounter.

DATES: Effective Date: May 28, 1986, to all persons except those to whom it has already been made effective by priority letter AD's from the FAA dated January 2, 1986, and January 17, 1986.

Compliance: As indicated in the body of the AD.

ADDRESSES: A copy of information pertaining to the AD is contained in the Rules Docket, Office of the Regional Counsel, Room 1558, 601 East 12th Street, Kansas City, Missouri 64106.

FOR FURTHER INFORMATION CONTACT: Mr. Bennett L. Sorensen, Aerospace Engineer, Wichita Aircraft Certification Office, FAA, Central Region, ACE-160W, 1801 Airport Road, Room 100, Mid-Continent Airport, Wichita, Kansas 67209; Telephone (316) 946-4433.

SUPPLEMENTARY INFORMATION: There have been several reported occurrences in Cessna Model T303 airplanes of rudder/rudder pedal oscillations, pitch oscillations and uncommanded nose down pitch changes when conducting flight in icing conditions. The uncommanded nose down pitch changes may result in loss of control of the airplane.

The FAA determined that this is an unsafe condition that may exist in other airplanes of the same type design, thereby necessitating the AD. It was also determined that an emergency condition existed, that immediate corresponding action was required and that notice and public procedure thereon was impractical and contrary to the public interest. Accordingly, the FAA notified all known registered owners of the airplanes affected by this AD by

priority letters dated January 2, 1986, and January 17, 1986. The AD became effective immediately as to these individuals upon receipt of those letters and is identified as AD 86-01-01 and 86-01-01R1.

Notwithstanding the operating rules, this AD removes approval for flight into known icing conditions for those airplanes with icing flight approval. In addition, for all airplanes, with or without icing approval, this AD adds to the emergency procedures section of the Pilot's Operating Handbook and FAA Approved Airplane Flight Manual additional information to help avoid or reduce the effects of this condition in the event of an inadvertent icing encounter. AD 86-01-01 stated that "flight into known or forecast icing conditions is prohibited." AD 86-01-01R1 relaxed the statement to "flight into known icing conditions is prohibited." Since the AD included adequate procedures for handling inadvertent icing encounters the original AD was considered an unnecessary burden on operators of the T303 airplanes. Since the unsafe condition described herein may still exist of other Cessna Model T303 airplanes, AD 86-01-01R1 is hereby published in the **Federal Register** as an amendment to Part 39 of the Federal Aviation Regulations (14 CFR Part 39) to make it effective as to all persons who did not receive the priority letter notification. Because a situation still exists that requires the immediate adoption of this regulation, it is found that notice and public procedure hereon are impracticable and contrary to the public interest, and good cause exists for making this amendment effective in less than 30 days.

The FAA has determined that this regulation is an emergency regulation that is not considered to be major under section 8 of Executive Order 12291. It is impracticable for the agency to follow the procedures of Executive Order 12291 with respect to this rule since the rule must be issued immediately to correct an unsafe condition in aircraft. It has been further determined that this action involves an emergency regulation under DOT Regulatory Policies and Procedures (44 FR 11034; February 26, 1979). If this action is subsequently determined to involve a significant regulation, a final regulatory evaluation or analysis, as appropriate, will be prepared and placed in the regulatory docket (otherwise, an evaluation is not required). A copy of it, when filed, may be obtained by contacting the Rules Docket at the location under the caption "**ADDRESSES.**"

List of Subjects in 14 CFR Part 39

Air transportation, Aviation safety, Aircraft, Safety.

Adoption of the Amendment

PART 39—[AMENDED]

Accordingly, pursuant to the authority delegated to me by the Administrator, the Federal Aviation Administration amends § 39.13 of Part 39 of the FAR as follows:

1. The authority citation for Part 39 continues to read as follows:

Authority: 49 U.S.C. 1354(a), 1421 and 1423; 49 U.S.C. 106(g) (Revised, Pub. L. 97-449, January 12, 1983); and 14 CFR 11.89.

2. By adding the following new AD:

Cessna: Applies to Model T303 airplanes (all serial numbers) certificated in any category.

Compliance: Required as indicated, unless previously accomplished.

To prevent hazardous flight characteristics due to accumulations of ice at the unprotected junctures of the horizontal and vertical tail, accomplish the following:

(a) Prior to further flight on those airplanes approved for flight into icing conditions:

(1) Fabricate and install on the instrument panel in clear view of the pilot the following placard using letters of a minimum of 0.10 inch in height; "FLIGHT INTO KNOWN ICING PROHIBITED."

(2) Revise the Pilot's Operating Handbook and FAA Approved Airplane Flight Manual Supplement "Known Icing Equipment," Section 2, Limitations, by deleting the first paragraph and replacing with the sentence: "Flight into known icing conditions is prohibited."

(3) Cover the airplane operating placard statement, "This airplane is approved for flight into icing conditions if the proper optional equipment is installed and operational" with opaque tape.

(4) Operate the airplane in accordance with the above limitations.

(b) Prior to further flight on all airplanes with or without approval for flight into icing conditions, revise the Pilot's Operating Handbook and FAA Approved Airplane Flight Manual, section 3, Emergency Procedures "Icing—Inadvertent Encounter" to add the following information in addition to the current published inadvertent icing encounter procedures:

(1) "A small amount (⅛" to ¼" thickness) of ice on the unprotected junctures of the horizontal and vertical tail may disturb the airflow in such a way as to cause rudder/rudder pedal oscillations, pitch oscillations and possibly an uncommanded nose down pitch change requiring a higher than normal pull force to counteract. This phenomenon varies with certain combinations of airspeed, power setting, flap deflections, sideslips and type of icing conditions.

(2) If this condition is encountered the following action will reduce or eliminate the rudder oscillation and/or pitch change.

(i) Reducing airspeed (by either establishing a climb or reducing power) will reduce or eliminate the condition.

(ii) Reducing power will reduce or eliminate the condition at any given airspeed.

(iii) Reducing flap deflection will reduce or eliminate the condition at any given airspeed.

(iv) Reducing sideslip (improving coordination) will reduce the tendency for the condition to develop."

(c) The Pilot's Operating Handbook and FAA Approved Airplane Flight Manual revision requirements of paragraphs (a)(2) and (b) of this AD may be accomplished by inserting a copy of this AD in the Pilot's Operating Handbook and FAA Approved Airplane Flight Manual. For additional information see Cessna Owner Advisory SNL85-60A, dated December 23, 1985.

(d) The requirements of Paragraph (a), (b), and (c) of this AD may be accomplished by the holder of a pilot certificate issued under Part 61 of the Federal Aviation Regulations (FARs) on any airplane owned or operated by him. The person accomplishing these actions must make the appropriate aircraft maintenance record entry as prescribed by FAR 91.173.

(e) An equivalent method of compliance with this AD, if used, must be approved by the manager, Wichita Aircraft Certification Office, 1801 Airport Road, Room 100, Mid-Continent, Wichita, Kansas 67209.

All persons affected by this directive may obtain copies of the document referred to herein upon request to the Cessna Aircraft Company, Customer Services, Post Office Box 1521, Wichita, Kansas 67201 or the FAA, Office of the Regional Counsel, Room 1558, 601 East 12th Street, Kansas City, Missouri 64106.

This amendment becomes effective on May 28, 1986, to all persons except those persons to whom it has already been made effective by priority letter from the FAA dated January 2, 1986, or January 17, 1986, and is identified as AD 86-01-01R1.

Issued in Kansas City, Missouri, on May 13, 1986.

Edwin S. Harris,

Director, Central Region.

[FR Doc. 86-11349 Filed 5-20-86; 8:45 am]

BILLING CODE 4910-13-M

---

14 CFR Part 39

[Docket No. 86-CE-08-AD Amdt. 39-5315]

Airworthiness Directives; Fairchild (Swearingen) Models SA226 and SA227 Airplanes

AGENCY: Federal Aviation Administration (FAA), DOT.

ACTION: Final rule.

SUMMARY: This amendment adopts a new Airworthiness Directive (AD), applicable to Fairchild (Swearingen) Models SA226 and SA227 airplanes

which requires removal of the present elevator gust lock belt. This AD is prompted by seven reports of elevator gust engagements on affected airplanes, during taxi or in flight, without warning to the pilot. This action will prevent inadvertent gust lock engagement which could result in loss of control of the airplane.

DATES: Effective Date: May 28, 1986.

Compliance: As prescribed in the body of the AD.

ADDRESSES: Fairchild Aircraft Corporation Service Bulletins (S/B) 226-27-041 revised February 18, 1986, and 227-27-016 revised February 18, 1986, applicable to this AD may be obtained from Fairchild Aircraft Corporation, Post Office Box 32486, San Antonio, Texas 78284; Telephone (512) 824-9421. A copy of this information is also contained in the Rules Docket, Office of the Regional Counsel, Room 1558, 601 East 12th Street, Kansas City, Missouri 64106.

FOR FURTHER INFORMATION CONTACT: Michelle Corning, (817) 877-2239, Airplane Certification Branch, ASW-150, Southwest Region, FAA, Post Office Box 1689, Fort Worth, Texas 76101.

SUPPLEMENTARY INFORMATION: This AD is prompted by seven reports of in-flight and ground engagements of the elevator gust lock on Fairchild Models SA226 and SA227 airplanes. The FAA has reviewed the design and installation of the elevator gust lock system on these model airplanes and the significant use of the airplanes as regional commuters in all types of weather conditions. Since the gust lock plunger assembly is exposed to the environment, the plunger assembly is subject to freezing or corrosion. This condition fails to give the pilot any warning that the lock may be stuck in an intermediate engage position, which may result in the lock engaging in flight. Inspection or lubrication of the elevator gust lock plunger is extremely difficult due to it's location. The manufacturer has also reviewed the service experience and system design of the control gust lock and issued service bulletins that provide for an alternate elevator control gust lock. Should the current elevator gust lock system components remain on the airplane, the elevator control lock may inadvertently engage in flight which could result in loss of control of the airplane.

Since the FAA has determined that the unsafe condition described herein is likely to exist or develop in other airplanes of the same type design, an AD is being issued requiring the removal of the elevator gust lock components and the installation of an alternate gust lock belt on Fairchild Models SA226 and SA227 airplanes. Because an emergency condition exists that requires the immediate adoption of this regulation, it is found that notice and public procedure hereon are impractical and contrary to the public interest, and good cause exists for making this amendment effective in less than 30 days.

The FAA has determined that this regulation is an emergency regulation that is not major under section 8 of Executive Order 12291. It is impracticable for the agency to follow the procedures of Order 12291 with respect to this rule since the rule must be issued immediately to correct an unsafe condition in aircraft. It has been further determined that this document involves an emergency regulation under DOT Regulatory Policies and Procedures (44 FR 11034; February 26, 1979). If this action is subsequently determined to involve a significant regulation, a final regulatory evaluation or analysis, as appropriate, will be prepared and placed in the regulatory docket (otherwise, an evaluation is not required). A copy of it, when filed, may be obtained by contacting the Rules Docket under the caption "**ADDRESSES**" at the location identified.

List of Subjects in 14 CFR Part 39

Air transportation, Aviation safety, Aircraft, Safety.

Adoption of the Amendment

PART 39—[AMENDED]

Accordingly, pursuant to the authority delegated to me by the Administrator, the Federal Aviation Administration amends § 39.13 of Part 39 of the FAR as follows:

1. The authority citation for Part 39 continues to read as follows:

Authority: 49 U.S.C. 1354(a), 1421 and 1423; 49 U.S.C. 106(g) (Revised, Pub. L. 97-449, January 12, 1983); and 14 CFR 11.89.

2. By adding the following new AD:

Fairchild: Applies to Models SA226 and SA227 airplanes (Serial Numbers (S/N) SA226-T, S/N T201 through T275, T277 through T291; SA226-T(B), S/N T(B)276, T(B)292 through T(B)417; SA226-AT, S/N AT001 through AT074; SA226-TC, S/N TC201 through TC419; SA227-TT, S/N TT421 through TT555; SA227-AT, S/N AT423 through AT631B; SA227-AC, S/N AC406, AC415, AC416, and AC420 through AC632) airplanes certificated in any category.

Compliance: Required within the next 200 hours time-in-service or the next 30 calender days, which ever comes first, after the effective date of this AD, unless already accomplished.

To prevent the elevator gust lock from engaging in flight, accomplish the following:

(a) Remove the elevator gust lock system components and install the alternate elevator gust lock and associated hardware in accordance with the instructions in Fairchild Aircraft Corporation Service Bulletin (S/B) 226-27-041 revised February 18, 1986, for the SA226 airplane models, or S/B 227-27-016 revised February 18, 1986, for the SA227 airplane models.

(b) Airplanes may be flown in accordance with FAR 21.197 to a location where this AD may be accomplished.

(c) An equivalent means of compliance may be used if approved by the Manager of the Airplane Certification Branch, ASW-150, Southwest Regional Office, FAA, Fort Worth, Texas 76101; Telephone (817) 877-2070.

All persons affected by this directive may obtain copies of the document(s) referred to herein upon request to Fairchild Aircraft Corporation, Post Office Box 32486, San Antonio, Texas 78284, or FAA, Office of the Regional Counsel, Room 1558, 601 East 12th Street, Kansas City, Missouri 64106.

This Amendment becomes effective on May 28, 1986.

Issued in Kansas City, Missouri, on May 13, 1986.

Edwin S. Harris,

Director, Central Region.

[FR Doc. 86-11350 Filed 5-20-86; 8:45 am]

BILLING CODE 4910-13-M

---

14 CFR Part 39

[Docket No. 86-NM-115-AD; Amdt. 39-5319]

Airworthiness Directives; McDonnell Douglas Model DC-9, MD-80, and C-9 (Military) Series Airplanes, Fuselage Numbers 1 Through 1265

AGENCY: Federal Aviation Administration (FAA), DOT.

ACTION: Final rule.

SUMMARY: This amendment adopts a new airworthiness directive (AD) which requires a one-time visual inspection of the emergency engine fire shutoff switch cams for proper installation position, and to reposition the cams, if necessary, on McDonnell Douglas Model DC-9, MD-80, and C-9 (Military) series airplanes. This AD is prompted by a report from an operator of an instance of inability to discharge the engine firex bottles after an engine fire indication due to the fire shutoff switch cams having been installed 180 degrees out of position. This AD is necessary to prevent inability to discharge the fire extinguishing agent in the event of an engine fire, which could result in an uncontrollable engine fire.

DATE: Effective June 9, 1986.

Compliance schedule as prescribed in the body of the AD, unless already accomplished.

ADDRESSES: The applicable service information may be obtained from McDonnell Douglas Corporation, 3855 Lakewood Boulevard, Long Beach, California 90846, Attention: Director, Publications and Training, C1-750 (54-60). This information may be examined at the FAA, Northwest Mountain Region, 17900 Pacific Highway South, Seattle, Washington, or at 4344 Donald Douglas Drive, Long Beach, California.

FOR FURTHER INFORMATION CONTACT: Mr. Ken Izumikawa, Aerospace Engineer, Propulsion Branch, ANM-140L, FAA, Northwest Mountain Region, Los Angeles Aircraft Certification Office, 4344 Donald Douglas Drive, Long Beach, California 90808; telephone (213) 514-6327.

SUPPLEMENTARY INFORMATION: One operator has reported an instance of inability to discharge the emergency engine firex bottles after an engine fire indication. Investigation revealed that the fire shutoff switch cams were incorrectly installed 180 degrees out of position. The cams should be positioned outboard as shown in the Maintenance Manual and not inboard as shown in the Illustrated Parts Catalog. The Illustrated Parts Catalog will be revised by McDonnell Douglas Corporation by July 1, 1986. A one-time inspection of the fire shutoff switch cams will determine whether cams are installed properly. Repositioning, if necessary, will eliminate inability to discharge the fire extinguishing agent in the event of an engine fire which could result in an uncontrollable engine fire.

McDonnell Douglas Corporation Alert Service Bulletin A76-43, dated April 14, 1986, has been issued to provide operators with instructions to inspect the fire shutoff switch cams and to reposition the cams, if necessary.

Since this situation is likely to exist or develop on other airplanes of the same type design, this AD requires that the emergency engine fire shutoff switch cams be inspected for proper installation position and repositioned if necessary, in accordance with McDonnell Douglas Alert Service Bulletin A76-43, dated April 14, 1986, or later FAA-approved revisions.

Further, since a situation exists that requires immediate adoption of this regulation, it is found that notice and public procedure hereon are impracticable, and good cause exists for making this amendment effective in less than 30 days.

The Federal Aviation Administration has determined that this regulation is an emergency regulation that is not considered to be major under Executive Order 12291. It is impracticable for the agency to follow the procedures of Order 12291 with respect to this rule since the rule must be issued immediately to correct an unsafe condition in aircraft. It has been further determined that this document involves an emergency regulation under DOT Regulatory Policies and Procedures (44 FR 11034; February 26, 1979). If this action is subsequently determined to involve a significant/major regulation, a final regulatory evaluation or analysis, as appropriate, will be prepared and placed in the regulatory docket (otherwise, an evaluation or analysis is not required).

List of Subjects in 14 CFR Part 39

Aviation safety, Aircraft.

Adoption of the Amendment

PART 39—[AMENDED]

Accordingly, pursuant to the authority delegated to me by the Administrator, the Fedeal Aviation Administration amends § 39.13 of Part 39 of the federal Aviation Regulation as follows:

1. The authority citation for Part 39 continues to read as follows:

Authority: 49 U.S.C. 1354(a), 1421 and 1423; 49 U.S.C. 106(g) (Revised, Pub. L. 97-449, January 12, 1983); and 14 CFR 11.89.

2. By adding the following new AD:

McDonnell Douglas: Applies to McDonnell Douglas Model DC-9, MD-80, and C-9 (Military) series airplanes, certificated in any category. Compliance required as indicated, unless previously accomplished.

To prevent inability to discharge the emergency engine fire extinguishing agent when necessary, accomplish the following:

A. Within 30 calendar days after the effective date of this Airworthiness Directive, conduct a one time visual inspection of the emergency engine fire shutoff switch cams for proper installation position, and reposition the cams, if necessary, in accordance with McDonnell Douglas Corporation Alert Service Bulletin A76-43, dated April 14, 1986, or later FAA-approved revisions.

B. Special flight permits may be issued in accordance with FAR 21.197 and 21.199 to operate airplanes to a base in order to comply with the inspection or repositioning requirements of this AD.

C. Alternate means of compliance which provide an acceptable level of safety may be used when approved by the Manager, Los Angeles Aircraft Certification Office, FAA, Northwest Mountain Region.

D. Upon the request of an operator, an FAA Maintenance Inspector, subject to prior approval by the Manager, Los Angeles Aircraft Certification Office, FAA, Northwest Mountain Region, may adjust the inspection times specified in this AD to permit compliance at an established inspection period of that operator if the request contains substantiating data to justify the change for that operator.

All persons affected by this directive who have not already received the appropriate service documents from the manufacturer may obtain copies upon request to McDonnell Douglas Corporation, 3855 Lakewood Boulevard, Long Beach, California 90846, Attention: Director, Publications and Training, C1-750 (54-60). These documents also may be examined at the FAA, Northwest Mountain Region, 17900 Pacific Highway South, Seattle, Washington or the Los Angeles Aircraft Certification Office, 4344 Donald Douglas Drive, Long Beach, California.

This Amendment becomes effective June 9, 1986.

Issued in Seattle, Washington, on May 14, 1986.

David E. Jones,

Acting Director, Northwest Mountain Region.

[FR Doc. 86-11361 Filed 5-20-86; 8:45 am]

BILLING CODE 4910-13-M

---

14 CFR Part 39

[Docket No. 86-CE-11-AD; Amdt. 39-5317]

Airworthiness Directives; United Instruments, Inc., Altimeters, Part Numbers 5934, 5934A, 5934M, 5934AM, 5934P, 5934PA, 5934PM, 5934PAM, 5934D, 5934PD, 5934AD, and 5934PAD

AGENCY: Federal Aviation Administration (FAA), DOT.

ACTION: Final rule.

SUMMARY: This amendment adopts a new Airworthiness Directive (AD) 86-05-02, applicable to United Instruments, Inc. Altimeters, Part Number 5934( ) and codifies the corresponding priority letter AD dated February 28, 1986, into the **Federal Register**. This AD is necessary to detect altimeters which could display erroneous altitude information to the pilot. Erroneous altitude information could lead to a landing accident or result in the loss of an aircraft. This AD requires immediate check of the adjustment knob system on installed altimeters to determine if the altitude indication pointers become disengaged with a slight pull on the knob and the return of all affected altimeters to United Instruments for rework.

DATES: Effective Date: May 28, 1986 to all persons except those to whom it has already been made effective by priority letter AD from the FAA dated February 28, 1986.

Compliance: As indicated in the body of the AD.

ADDRESSES: United Instruments Service Bulletin (S/B) No. 2, dated February 24, 1986, may be obtained from United Instruments, Inc., 3625 Comotara Avenue, Wichita, Kansas 67226. This information may also be examined at FAA, Central Region, 601 East 12th Street, Kansas City, Missouri, or FAA Central Region, Wichita Aircraft Certification Office, 1801 Airport Road, Room 100, Mid-Continent Airport, Wichita, Kansas.

FOR FURTHER INFORMATION CONTACT: Mr. Robert R. Jackson, Aerospace Engineer, Wichita Aircraft Certification Office, ACE-130W, 1801 Airport Road, Room 100, Mid-Continent Airport, Wichita, Kansas 67209; Telephone (316) 946-4419.

SUPPLEMENTARY INFORMATION: Reports have been received stating that upon adjusting the barometric pressure setting on United Instruments Part Number (P/N) Series 5934( ) altimeters, the adjustment knob became disengaged from the altitude indication pointers. This disengagement negates the coupled gear arrangement between the adjustment knob, barometric pressure indicator and the altitude indication pointers leading to an erroneous display to the pilot.

The FAA determined that this is an unsafe condition that could exist in other altimeters of the same type design. It was also determined that an emergency condition existed, that immediate corresponding action was required, and that notice and public procedure thereon was impractical and contrary to the public interest. Accordingly, AD 86-05-02 was issued February 28, 1986, and was mailed by priority letter to all U.S. aircraft owners and operators.

This AD requires an immediate check of the adjustment knob system to determine if the altitude indication pointers have become disengaged. If disengagement is noted, the altimeter must be removed from service and returned to United Instruments. Regardless of the results of this check this AD also requires the eventual return for modification of all affected serial numbered altimeters to United Instruments, Inc., by July 1, 1986.

Since the unsafe condition described herein may still exist, the AD is being published in the **Federal Register** as an amendment to Section 39.13 of Part 39 of the Federal Aviation Regulations (14 CFR Part 39) to make it effective to all persons.

The FAA has determined that this regulation is an emergency regulation that is not considered to be major under Executive Order 12291. It is impracticable for the agency to follow the procedures of Order 12291 with respect to this rule since the rule must be issued immediately to correct an unsafe condition in aircraft. It has been further determined that this document involves an emergency regulation under DOT Regulatory Policies and Procedures (44 FR 11034; February 26, 1979). If this action is subsequently determined to involve a significant/major regulation, a final regulatory evaluation or analysis, as appropriate, will be prepared and placed in the regulatory docket (otherwise an evaluation is not required).

List of Subjects in 14 CFR Part 39

Air transportation, Aviation safety, Aircraft safety.

Adoption of the Amendment

PART 39—[AMENDED]

Accordingly, pursuant to the authority delegated to me by the Administrator, the Federal Aviation Administration amends § 39.13 of Part 39 of the FAR as follows:

1. The authority citation for Part 39 continues to read as follows:

Authority: 49 U.S.C. 1354(a), 1421 and 1423; 49 U.S.C. 106(g) (Revised Pub. L. 97-449, January 12, 1983); and 14 CFR 11.89.

§ 39.13 [Amended]

2. By adding the following new AD:

United Instruments, Inc.: Applies to altimeter Part Numbers 5934, 5934A, 5934M, 5934AM, 5934P, 5934PA, 5934PM, 5934PAM, 5934D, 5934PD, 5934AD, and 5934PAD, with the following serial numbers:

6C461 thru 6C999
7C000 thru 7C999
8C000 thru 8C999
9C000 thru 9C959
0D000 thru 0D999
1D000 thru 1D999
2D000 thru 2D869

Note: This AD is applicable to pressure sensitive altimeters that do not have encoding capabilities. The affected altimeters were manufactured after February 1, 1985.

Compliance: Required as indicated, unless already accomplished.

To prevent possible erroneous altitude information from being displayed to the pilot, accomplish the following:

(a) For all altimeters that are installed in an aircraft, prior to further flight,

(1) Check each installed altimeter or check the aircraft's permanent maintenance record to determine if the altimeter falls within the Serial Number designations set forth in this AD. The owner/operator of the aircraft may make this check.

(2) If, as a result of this check, it is determined that the altimeter falls within these designations, check the altimeter by applying a slight outward pull on the adjustment knob while turning the knob and determine that the altitude indication pointers and the barometric pressure dial remain synchronized.

(3) The holder of a pilot certificate issued under Part 61 of the Federal Aviation Regulation (FAR) may conduct this check on any airplane owned or operated by him. The person accomplishing this must make the appropriate aircraft maintenace record entry as prescribed by FAR 91.173.

(4) If the altitude pointers do not move simultaneously with the barometric dial, prior to further flight remove the altimeter and return it to United Instruments, Inc., 3625 Comotara Avenue, Wichita, Kansas, 67226, no later than July 1, 1986. Replacement altimeters must be serviceable units.

Note 2: It is recommended but not required by this AD, that the above check for synchronized movement be accomplished each time the altimeter barometric pressure dial is adjusted.

(b) Regardless of the results of the check specified in paragraph (a) of this AD, on or before July 1, 1986, for all affected altimeters installed in an aircraft, remove the altimeter and return it to United Instruments, Inc. at the above address. Replacement altimeters must be serviceable units.

(c) For all affected altimeters not installed in an aircraft, prior to further use but no later than July 1, 1986, return the altimeter to United Instruments, Inc., at the above, address, for examination and modification as required.

(d) For each altimeter returned to United Instruments, Inc. per the instructions of paragraphs (a), (b) and (c) above, the examination and rework by United Instruments, Inc. will be identified by a yellow dot approximately ¼ inch (6.4 mm) diameter on the lower half of the rear case and the letter "M", aproximately ⅛ inch (3.2 mm) in height stamped on the data plate just before the word "altimeter". Units that have been reworked and so marked may be used as serviceable replacement parts.

(e) Aircraft may be flown in accordance with Federal Aviation Regulation (FAR) 21.197 to a location where this AD can be accomplished. Prior to dispatch, set the altimeter to field elevation and do not reset in flight.

(f) An equivalent method of compliance with this AD, if used, must be approved by the Manager, Wichita Aircraft Certification Office, 1801 Airport Road, Room 100, Mid-Continent Airport, Wichita, Kansas, 67209.

United Instruments Service Bulletin No. 2, dated February 24, 1986, pertains to the subject of this AD.

All persons affected by this directive may obtain copies of the documents referred to herein upon request to United Instruments, Inc., 3625 Comotara Avenue, Wichita, Kansas, 67226, or FAA, Office of the Regional Counsel, Room 1558, 601 East 12th Street, Kansas City, Missouri 64106.

This amendment becomes effective on May 28, 1986, to all persons except those

to whom it has already been made effective by priority letter AD from the FAA dated February 28, 1986, and is identified as AD 86-05-02.

Issued in Kansas City, Missouri, on May 13, 1986.

Edwin S. Harris,

Director, Central Region.

[FR Doc. 86-11351 Filed 5-20-86; 8:45 am]

BILLING CODE 4910-13-M

14 CFR Part 71

[Airspace Docket No. 86-ASO-4]

Alteration of Transition Area, LaGrange, GA

AGENCY: Federal Aviation Administration (FAA), DOT.

ACTION: Final rule.

SUMMARY: This amendment increases the size of the LaGrange, Georgia, transition area to accommodate a new instrument approach procedure which has been developed to serve Callaway Airport. This action will lower the base of controlled airspace, southeast of the airport, from 1,200 to 700 feet above the surface. This additional controlled airspace is required for protection of Instrument Flight Rules (IFR) aeronautical activities.

EFFECTIVE DATE: 0901 UTC, July 3, 1986.

FOR FURTHER INFORMATION CONTACT: Donald Ross, Supervisor, Airspace Section, Airspace and Procedures Branch, Air Traffic Division, Federal Aviation Administration, P.O. Box 20636, Atlanta, Georgia 30320; telephone: (404) 763-7646.

SUPPLEMENTARY INFORMATION:

History

On Wednesday, March 12, 1986, the FAA proposed to amend Part 71 of the Federal Aviation Regulations (14 CFR Part 71) to altering the LaGrange, Georgia, transition area by designating additional controlled airspace southeast of Callaway Airport. This airspace is required to support IFR aeronautical activities in the LaGrange area (51 FR 8510). Interested parties were invited to participate in this rulemaking proceeding by submitting written comments on the proposal to the FAA. No comments objecting to the proposal were received. This amendment is the same as that proposed in the notice. Section 71.181 of Part 71 of the Federal Aviation Regulations was republished in FAA Handbook 7400.6B dated January 2, 1986.

The Rule

This amendment to Part 71 of the Federal Aviation Regulations increases the size of the LaGrange, Georgia, transition area to accommodate a new instrument approach procedure.

The FAA has determined that this proposed regulation only involves an established body of technical regulations for which frequent and routine amendments are necessary to keep them operationally current. It, therefore, (1) is not a "major rule" under Executive Order 12291; (2) is not a "significant rule" under DOT Regulatory Policies and Procedures (44 FR 11034; February 26, 1979); and (3) does not warrant preparation of a regulatory evaluation as the anticipated impact is so minimal. Since this is a routine matter that will only affect air traffic procedures and air navigation, it is certified that this rule, when promulgated, will not have a significant economic impact on a substantial number of small entities under the criteria of the Regulatory Flexibility Act.

List of Subjects in 14 CFR Part 71

Aviation safety, Transition area.

Adoption of the Amendment

PART 71—[AMENDED]

Accordingly, pursuant to the authority delegated to me, Part 71 of the Federal Aviation Regulations (14 CFR Part 71) is amended, as follows:

1. The authority citation for Part 71 continues to read as follows:

Authority: 49 U.S.C. 1348(a), 1354(a), 1510; Executive Order 10854; 49 U.S.C. 106(g) (Revised Pub. L. 97-449, January 12, 1983); 14 CFR 11.69.

2. By amending § 71.181 as follows:

LaGrange, GA—[Revised]

That airspace extending upward from 700 feet above the surface with a 6.5-mile radius of Callaway Airport (Lat. 33°00'27" N., Long. 85°04'15" W.); within 1.5 miles each side of the LaGrange VORTAC 110° radial, extending from the 6.5-mile radius area to the VORTAC; within 4.5 miles southwest and 6.5 miles northeast of the Callaway Runway 31 localizer southeast course, extending from the localizer to 12.5 miles southeast of the outer marker, excluding that portion which coincides with the Pine Mountain, Georgia, transition area.

Issued in East Point, Georgia, on May 13, 1986.

Thomas H. Protiva,

Manager, Air Traffic Division, Southern Region.

[FR Doc. 86-11354 Filed 5-20-86; 8:45 am]

BILLING CODE 4910-13-M

SECURITIES AND EXCHANGE COMMISSION

17 CFR Part 240

[Release No. 34-23229; File No. S7-626]

Securities Transactions Exempt from Transaction Fees

AGENCY: Securities and Exchange Commission.

ACTION: Final rule.

SUMMARY: In connection with extending unlisted trading privileges to over-the-counter stocks and permitting listed securities to be concurrently designated National Market System Securities, the Commission is amending its rule governing transaction fees to exempt all transactions in National Market System Securities that are traded on an exchange (on a listed or unlisted trading privileges basis).

EFFECTIVE DATE: May 6, 1986.

FOR FURTHER INFORMATION CONTACT: Leland H. Goss, Esq., (202) 272-2827, Room 5204, Division of Market Regulation, Securities and Exchange Commission, 450 Fifth Street, NW., Washington, DC 20549.

SUPPLEMENTARY INFORMATION:

I. Summary

Section 31 of the Securities Exchange Act of 1934 ("Act") [1] requires that every national securities exchange pay to the Commission a fee based on sales of securities transacted on that exchange.[2] In addition, section 31 requires payment of similar fees from broker-dealers for over-the-counter ("OTC") transactions in listed securities. The Section also gives the Commission authority to grant exemptions from the fee requirement.[3]

"Every national securities exchange shall pay to the Commission on or before March 15 of each calendar year a fee in an amount equal to one three-hundredths of 1 per centum of the aggregate dollar amount of the sales of securities (other than bonds, debentures, and other evidences of indebtedness) transacted on such national securities exchange during each preceding calendar year to which this section applies. Every registered broker and dealer shall pay to the Commission on or before March 15 of each calendar year a fee in an amount equal to one three-hundredths of 1 per centum of the aggregate dollar amount of the sales of securities registered on a national securities exchange (other than bonds, debentures, and other evidences of indebtedness) transacted by such broker or dealer otherwise than on such an exchange during each preceding calendar year: Provided, however, that no

[1] 15 U.S.C. 78a *et seq.*, as amended.

[2] The text of Section 31, as amended, is:

[3] *Id.*

payment shall be required for any calendar year in which such payment would be less than one hundred dollars. The Commission, by rule, may exempt any sale of securities or any class of sales of securities from any fee imposed by this section, if the Commission finds that such exemption is consistent with the public interest, the equal regulation of markets and brokers and dealers, and the development of a national market system."

On September 16, 1985, the Commission issued two releases that incidentally could subject transactions in certain OTC securities designated as National Market System ("NMS") Securities [4] to section 31 fees for the first time. First, the Commission has announced the terms and conditions for exchanges to commence trading NMS Securities on an unlisted trading privileges ("UTP") basis beginning January 1, 1986.[5] Second, the Commission has adopted amendments to the NMS Securities Rule to allow listed securities that are not reported in the consolidated transaction reporting system to be designated as NMS Securities beginning October 1, 1985.[6] Although OTC securities are not now generally subject to Section 31 fees, transactions in either listed NMS Securities or NMS Securities admitted to UTP would be subject to the section's fee requirement, whether effected on an exchange or in the OTC market.[7]

On January 10, 1986, the Commission issued a release ("Release")[8] seeking public comment on a proposed temporary amendment to Rule 31-1 to exempt transactions in NMS Securities traded on an exchange on a listed or UTP basis. The Commission received no comments in response to the Release and has determined to adopt the proposed temporary amendment to Rule 31-1.

II. Discussion

Because section 31 requires every national securities exchange to pay a fee calculated on the dollar amount of "sales of securities . . . transacted on such [exchange]," exchanges would pay fees on NMS Securities traded on that exchange pursuant to a grant of UTP. Furthermore, because section 12(f)(6) of the Act [9] deems any security admitted to UTP on a national securities exchange to be "registered" within the meaning of the Act, broker-dealers trading such securities in the OTC market would also have to pay section 31 fees.[10] Similarly, section 31 would also cover transactions in listed securities concurrently designated as NMS Securities after January 1, 1986. Therefore, once trading in these securities begins in multiple markets, all transactions in such NMS Securities, both on an exchange and OTC, would be subject to payment of section 31 fees.

The commencement of OTC/UTP trading and exchange traded NMS Securities raises the issue of the appropriateness of payment of section 31 fees on what are essentially OTC securities.[11] The Commission believes it should exempt from the application of section 31 the limited group of NMS Securities subject to UTP or concurrent exchange trading. Absent this exemption, the application of section 31 would depend entirely on exchange decisions on whether to obtain UTP. Once an exchange made such a decision, not only the exchanges but all OTC participants who trade the affected NMS Securities would automatically be subject to section 31 fees, even if there was little or no actual exchange trading. This is particularly a concern during the start-up period for exchange UTP in NMS Securities, where the number of NMS Securities subject to UTP will be limited and the Commission cannot predict that there will be substantial exchange trading. The Commission considers it preferable to address the application of section 31 fees to the OTC market directly, and not through the automatic application of section 31 as a result of granting UTP to NMS Securities or the concurrent exchange listing and NMS designation of a limited number of securities.

Accordingly, the Commission has determined to adopt temporary amendments to Rule 31-1 that would exempt from section 31 transactions in NMS Securities traded on an exchange on a listed or UTP basis. For the reasons discussed above, the Commission finds that these exemptions are consistent with the public interest, equal regulation of markets and broker-dealers and the development of a national market system. The amendments only affect transactions in those NMS Securities that are subject to either UTP or a concurrent exchange listing. The amendments will be effective for a period not to exceed two years to allow the Commission time to reach a conclusion regarding the applicability of section 31 fees to NMS Securities.

III. Effect on Competition and Regulatory Flexibility

Section 23(a)(2) of the Act [12] requires the Commission, in adopting rules under the Act, to consider anti-competitive effects of such rules, if any, and to balance any anti-competitive impact against the regulatory benefits gained in terms of furthering the purposes of the Act. As noted above, the exemption will apply to both exchange and OTC transactions in NMS Securities. While adoption of the exemption means that transactions in other exchange-traded securities will be subject to section 31 fees while transactions in exchange-traded NMS Securities will not, the Commission believes those securities will have much different trading characteristics. In particular, as indicated above the Commission cannot predict at this time that there will be substantial exchange trading in the subject NMS Securities. The Commission has examined the amendment to Rule 31-1 in light of the standards set forth in section 23(a) and concludes that adoption of the amendment will have, at most, a minimal competitive impact and will not impose any burden on competition not necessary or appropriate in furtherance of the purposes of the Act.

The Commission has prepared a Final Regulatory Flexibility Analysis

[4] Rule 11Aa2-1 under the Act (17 CFR 240.11Aa2-1) ("NMS Securities Rule") sets forth the criteria and procedures by which certain OTC securities are designated as NMS Securities. *See* Securities Exchange Act Release No. 21583 (December 18, 1984), 50 FR 730 ("NMS Amendments Release"); Securities Exchange Act Release No. 17549 (February 17, 1981), 46 FR 13992 ("NMS Adoption Release"). The primary effect of designation as an NMS Security is that the security is subject to last sale reporting and confirmation requirements similar to those applicable to exchange traded securities. Transaction reports are collected and disseminated through the NASD's NASDAQ system pursuant to an effective transaction reporting plan administered by the NASD. These securities and listed securities included in the consolidated transaction reporting system are "reported securities." *See* 17 CFR 240.11Aa3-1(a)(4).

[5] Securities Exchange Act Release No. 22412 (September 16, 1985), 50 FR 38640 ("OTC/UTP Release").

[6] Securities Exchange Act Release No. 22413 (September 16, 1985), 50 FR 38515 ("OTC/Listed NMS Securities Release"). At present, transactions in these securities are subject to payment of Section 31 fees. Because the great majority of the trading of these securities occurs OTC, the Commission believes it is simplest and most equitable to exempt both exchanges and OTC market makers from Section 31 fees on transactions in these securities at the current time.

[7] *See also* Section 12(f)(6) of the Act, 15 U.S.C. 78*l* and Rule 31-1 under Act, 17 CFR 240.31-1.

[8] *See* Securities Exchange Act Release No. 22787 (January 10, 1986), 51 FR 2521 ("Release").

[9] 15 U.S.C. 78*l*.

[10] *See also* 17 CFR 240.31-1.

[11] Although listed securities concurrently designated NMS technically may resemble any other listed securities which are traded off-board in the "third market" and are presently covered by Section 31, the former are predominantly traded in the OTC market, while the latter trade primarily on exchanges.

[12] 15 U.S.C. 78w(a)(2).

("FRFA") [13] regarding the proposed amendment to Rule 31-1. The FRFA notes that the proposed amendment would exempt from section 31 of the Act exchanges and broker-dealers engaging in transactions in NMS Securities subject to UTP or to concurrent exchange listing. The FRFA notes that the principal effect of this exemption would be to relieve exchanges and broker-dealers from payment of fees to which they otherwise would be subject. The FRFA states that, in order to determine the amount of fee owed under section 31, market participants would need to separately calculate dollar volume in NMS Securities and dollar volume in non-NMS Securities.

A copy of the FRFA may be obtained by contacting Leland H. Goss, Esq. (202) 272-2827, Division of Market Regulation, Securities and Exchange Commission, 450 5th Street, NW., Washington, DC 20549.

List of Subjects in 17 CFR Part 240

Reporting and recordkeeping requirements, Securities.

IV. Statutory Basis and Text of Proposed Amendments.

The Commission amends Chapter II of Title 17 of the Code of Federal Regulations as follows:

PART 240—[AMENDED]

1. The authority citation for Part 240 is amended by adding the following citation.

Authority: Section 23, 48 Stat. 901, as amended; 15 U.S.C. 78w. * * * § 240.31-1 is also authorized under section 31, 48 Stat. 904, as amended (15 U.S.C. 78ee).

2. Section 240.31-1 is amended by adding new paragraph (f) as follows:

§ 240.31-1 Securities transactions exempt from transaction fees.

* * * * *

(f) Transactions in National Market System Securities as defined in § 240.11Aa2-1 (Rule 11Aa2-1 under the Act). The terms and provisions of this paragraph shall remain effective until May 6, 1988.

Dated: May 13, 1986.

By the Commission.

John Wheeler,

Secretary.

[FR Doc. 11406 Filed 5-20-86; 8:45 am]

BILLING CODE 8010-01-M

[13] 5 U.S.C. 604.

DEPARTMENT OF HEALTH AND HUMAN SERVICES

Food and Drug Administration

21 CFR Parts 330, 331, 332, and 357

[Docket No. 82N-0154]

Labeling of Drug Products for Over-the-Counter Human Use

Correction

In FR Doc. 86-9720, beginning on page 16258, in the issue of Thursday, May 1, 1986, make the following corrections:

1. On page 16258, first column, fourth line of "Supplementary Information", "exclusivity" was misspelled.

2. On the same page, second column, first complete paragraph, nineteenth line, after "policy" insert, ", FDA should continue the policy".

3. On page 16264, third column, third complete paragraph under "15.", second line from the bottom of the paragraph, "OT" should read "OTC".

BILLING CODE 1505-01-M

21 CFR Part 630

[Docket No. 86N-0113]

Biological Products; Corrections and Technical Amendments; Correction

AGENCY: Food and Drug Administration.

ACTION: Final rule; correction.

SUMMARY: The Food and Drug Administration (FDA) is correcting the final rule that contained miscellaneous amendments to its regulations on biological products (51 FR 15606; April 25, 1986). The current address of the Office of Biologics Research and Review was inadvertently omitted in one of the amendments. This document corrects that error.

EFFECTIVE DATE: April 25, 1986.

FOR FURTHER INFORMATION CONTACT: Joseph G. Wilczek, Center for Drugs and Biologics (HFN-362), Food and Drug Administration, 5600 Fishers Lane, Rockville, MD 20857, 301-295-8049.

SUPPLEMENTARY INFORMATION: In FR Doc. 86-9119 appearing at page 15606 in the **Federal Register** of Friday, April 25, 1986, in the second column, amendment 18 is corrrected to read as follows:

§ 630.5 [Amended]

18. In § 630.5 *General requirements*, in the introductory text of paragraph (c) by changing "Building 29A, 9000 Rockville Pike, Bethesda, MD 20205" to read "8800 Rockville Pike, Bethesda, MD 20892."

Dated: May 15, 1986.

John M. Taylor,

Acting Associate Commissioner for Regulatory Affairs.

[FR Doc. 86-11371 Filed 5-20-86; 8:45 am]

BILLING CODE 4160-01-M

DEPARTMENT OF EDUCATION

Office of Educational Research and Improvement

34 CFR Parts 768, 769, 770, 771, and 772

Library Services and Construction Act; State-Administered Program and Direct Grant Programs for Indian Tribes and Hawaiian Natives

AGENCY: Department of Education.

ACTION: Final regulations.

SUMMARY: The Secretary amends regulations governing the State-Administered Program and the four direct grant programs under the Library Services and Construction Act. These amendments implement statutory changes contained in Pub. L. 99-159.

EFFECTIVE DATE: These regulations take effect either 45 days after publication in the **Federal Register** or later if the Congress takes certain adjournments. If you want to know the effective date of these regulations, call or write the Department of Education contact person.

FOR FURTHER INFORMATION CONTACT: Mr. Robert Klassen, Director, Public Library Support Staff, U.S. Department of Education, 400 Maryland Avenue, SW., Room 728, Brown Building, Washington, DC 20202-1730. Telephone: (202) 254-9664.

SUPPLEMENTARY INFORMATION:

Background

These amendments implement recent changes to the Library Services and Construction Act (LSCA) (20 U.S.C. 351 *et seq.*) made by Title III of Pub. L. 99-159 (Library Services Program) of the National Science, Engineering, and Mathematics Authorization Act of 1986. The regulations being amended are those of:

(1) The LSCA Foreign Language Materials Acquisition Program, which assists State public libraries and local public libraries in the acquisition of foreign language materials; (2) the LSCA Library Literacy Program, which assists State public libraries and local public libraries in the development of literacy projects; (3) the LSCA State-Administered Program, which assists

States to extend and improve public library services, construct and renovate public libraries, and develop and strengthen interlibrary cooperation and resource sharing; and (4) the LSCA's other two direct grant programs; specifically, the LSCA Basic Grants to Indian Tribes and Hawaiian Natives Program and the LSCA Special Projects Grants to Indian Tribes and Hawaiian Natives Program, which are intended to establish or improve public library services to Indians and Hawaiian natives.

The regulations that govern the LSCA Foreign Language Materials Acquisition Program (34 CFR Part 768), the LSCA Library Literacy Program (34 CFR Part 769), the LSCA State-Administered Program (34 CFR Part 770), the LSCA Basic Grants to Indian Tribes and Hawaiian Natives Program (34 CFR Part 771), and the LSCA Special Projects Grants to Indian Tribes and Hawaiian Natives Program (34 CFR Part 772), were published in the **Federal Register** on August 16, 1985 (50 FR 33172).

Summary of Regulatory Amendments

The following amendments to the LSCA Program regulations implement technical amendments to the LSCA contained in Title III (Library Services Program) of Pub. L. 99–159.

(1) Amendment Applicable to the State-Administered Program and the Four Direct Grant Programs

Sections 768.4(c), 769.4(c), 770.4(c), and 771.4(b). The definition of the term "Act" has been revised to indicate that the term "means the Library Services and Construction Act, as amended".

(2) The Library Services and Construction Act State-Administered Program

(a) *Section 770.4(a).* In the definition of the term "long-range program," the phrase "except that this program may cover a period of not less than three nor more than five years." and the citation "(20 U.S.C. 351d)" have been deleted. The statutory definition of the term "long-range program", at section 3(12) of the LSCA, has been amended by section 301(a) of the Pub. L. 99–159, to read: "a program of not less than three nor more than five years." Section 3(12) of the LSCA now conforms to section 6(d)(1) of the LSCA.

(b) *Section 770.4(c).* In accordance with section 302(b) of Pub. L. 99–159, the term "Limited English-speaking proficiency," has the same meaning under this part as the same term defined in section 703(a) of the Bilingual Education Act (20 U.S.C. 3223(a)), and the full text of the definition is no longer included in the regulations.

(c) *Sections 770.24(b)(2)(i) and 770.40(d).* These sections have been amended to reflect section 304 of Pub. L. 99–159. Accordingly, these provisions now indicate that the sum appropriated under Title I of the LSCA, excluding the amounts which must be set aside for grants to Indian tribes and Hawaiian natives under Title IV, forms the basis for the calculation of whether States must reserve any Title I funds for major urban resource libraries. Prior to Pub. L. 99–159, States were required in effect to include the amount withheld for Indian tribes and Hawaiian natives in the calculation.

(d) *Section 770.43(b).* This section is amended in accordance with section 303(a) of Pub. L. 99–159, which provides that the reference to "such titles" in section 8 of the LSCA shall be construed to mean Titles I, II, and III.

Thus, § 770.43(b) of the regulations now provides that the calculation of the six percent maximum for purposes of administrative expenditures is to be based upon the sum of the amounts allotted to each State under Titles I, II, and III.

(e) *Section 770.43(c).* This section is amended in accordance with section 303(b) of Pub. L. 99–159 and section 8 of the LSCA. Section 770.43(c) now provides that a State agency may spend funds received under both Titles I and II for administration. As explained in paragraph (d) above, the calculation of the six percent would still be based on the sum of the amounts allotted under Titles I, II, and III.

(3) Amendments to the (A) Library Services and Construction Act Basic Grants to Indian Tribes and Hawaiian Natives Program and (B) the Library Services and Construction Act Special Projects Grants to Indian Tribes and Hawaiian Natives Program

(a) *Section 771.4(b).* The definition of the term "Indian tribe" has been revised to indicate that the term means "an Indian tribe, band, nation, or other organized group or community recognized by the Secretary of the Interior to be eligible for the special programs and services provided by the United States to Indians because of their status as Indians", in accordance with Section 301(b) of Pub. L. 99–159.

(b) *Section 771.4(b)(ii).* This portion of the definition of "Indian tribe" has been deleted in accordance with the Pub. L. 99–159 deletion of the phrase "as determined by the Secretary after consultation with the Secretary of the Interior." (Section 301(b)(2)).

(c) *Sections 771.1, 771.10(a)(9)(i), 771.20(c)(1), 772.1, 772.10(a)(9)(i), 772.20(c)(3)(i)(A), and 772.31(f)(2)(iv)(A).* These sections have been amended in accordance with section 305 of Pub. L. 99–159, which adds a new section 406 to the LSCA. Section 406 provides that Indian tribes and Indians in California, Oklahoma, and Alaska are now eligible to apply for basic grants and special project grants under Title IV of the LSCA. The present regulations restricted the group of eligibles under the Title IV programs to Hawaiian native organizations and to Indian tribes whose applications proposed the providing of services to Indians living on or near reservations.

(d) *Sections 771.10 and 772.10.* These sections have been amended in accordance with section 302(a)(2) of Pub. L. 99–159, which permits Hawaiian native organizations "to contract to provide public library services to native Hawaiians, and to carry out any other activities authorized under this sentence by contract." Prior to Pub. L. 99–159, pursuant to section 5(d)(2) of the LSCA, Hawaiian native organizations did not have the authority to contract for public library services.

(e) *Sections 771.20(d), 771.40 and 772.41.* These sections have been amended in accordance with section 302(a)(1) of Pub. L. 99–159, which imposes the LSCA section 402(b) maintenance-of-effort requirement on Hawaiian native organizations. Due to section 302(a)(1) of Pub. L. 99–159, any Hawaiian native organization supporting a public library system must provide an assurance, under § 771.20(d), that the organization will expend from Federal, State, and local sources an amount sufficient to meet the maintenance-of-effort requirements in §§ 771.40 and 772.41. Under the existing regulations and prior to Pub. L. 99–159, Hawaiian native organizations were not required to provide a maintenance-of-effort assurance under § 771.20(d), nor were they subject to the maintenance-of-effort requirements of §§ 771.40 and 772.41.

Waiver of Proposed Rulemaking

In accordance with section 431(b)(2)(A) of the General Education Provisions Act (20 U.S.C. 1232(b)(2)(A)) and the Administrative Procedure Act (5 U.S.C. 553), it is the practice of the Department of Education to publish regulations in proposed form and to offer interested parties the opportunity to comment on the proposed regulations. However, because these new regulations reflect only statutory changes and minor technical

amendments, publication of this document as a proposed rule for public comment has been determined to be unnecessary and contrary to the public interest under 5 U.S.C. 553(b)(B).

Executive Order 12291

These regulations have been reviewed in accordance with Executive Order 12291. They are not classified as major because they do not meet the criteria for major regulations established in the Order.

Regulatory Flexibility Act Certification

The Secretary certifies that these regulations will not have a significant economic impact on a substantial number of small entities. These amendments conform the existing regulations to new statutory requirements. The scope of the changes is limited and will not have a significant economic impact on the entities affected by the regulations.

Intergovernmental Review

This program is subject to the requirements of Executive Order 12372 and the regulations in 34 CFR Part 79. The objective of the Executive Order is to foster an intergovernmental partnership and a strengthened federalism by relying on processes developed by State and local governments for coordination and review of proposed Federal financial assistance.

In accordance with the Order, this document is intended to provide early notification of the Department's specific plans and actions for this program. (Please note that federally recognized Indian tribal governments are not subject to Executive Order 12372.)

List of Subjects

34 CFR Part 768

Education, Foreign language—library, Grant programs, Libraries, Reporting and recordkeeping requirements.

34 CFR Part 769

Education, Education of disadvantaged, Grant programs—education, Literacy program—libraries, Reporting and recordkeeping requirements.

34 CFR Part 770

Aging—libraries, Construction—libraries, Correctional institutions—libraries, Education, Education of disadvantaged, Grant programs—education, Handicapped, Libraries, Mental health programs—libraries, Penal institutions—libraries, Prisons—libraries, Reporting and recordkeeping requirements.

34 CFR Part 771

Construction—libraries, Grants programs—education, Hawaiian natives—libraries, Indian tribes—libraries, Reporting and recordkeeping requirements.

34 CFR Part 772

Construction—libraries, Grant programs—education, Hawaiian natives—libraries, Indian tribes—libraries, Reporting and recordkeeping requirements.

Citations of Legal Authority

A citation of statutory or other legal authority is placed in parentheses on the line following each substantive provision of these final regulations.

(Catalog of Federal Domestic Assistance Numbers: 84.034 (Library Services); 84.154 (Public Library Construction); 84.035 (Interlibrary Cooperation and Resource Sharing); 84.163 (Basic Grants to Indian Tribes and Hawaiian Natives Program and Special Projects Grants to Indian Tribes and Hawaiian Natives Program); 84.166 (Library Services and Construction Act Foreign Language Materials Acquisition Program); and 84.167 (Library Services and Construction Act Library Literacy Program)).

Dated: May 15, 1986.

William J. Bennett,

Secretary of Education.

The Secretary amends Parts 768, 769, 770, 771, and 772 of Title 34 of the Code of Federal Regulations as follows:

PART 768—THE LIBRARY SERVICES AND CONSTRUCTION ACT FOREIGN LANGUAGE MATERIALS ACQUISITION PROGRAM

1. The authority citation for Part 768 is revised to read as follows:

Authority: 20 U.S.C. 351 *et seq.*, unless otherwise noted.

2. In § 768.4, paragraph (c) is amended by revising the definition of the term "Act" to read as follows:

§768.4 What definitions apply to the Foreign Language Materials Program?

* * * * *

(c) * * *

"Act" means the Library Services and Construction Act, as amended.

* * * * *

PART 769—THE LIBRARY SERVICES AND CONSTRUCTION ACT LIBRARY LITERACY PROGRAM

3. The authority citation for Part 769 is revised to read as follows:

Authority: 20 U.S.C. 351 *et seq.*, unless otherwise noted.

4. In § 769.4, paragraph (c) is amended by revising the definition of the term "Act" to read as follows:

§769.4 What definitions apply to the Library Literacy Program?

* * * * *

(c) * * *

"Act" means the Library Services and Construction Act, as amended.

* * * * *

PART 770—THE LIBRARY SERVICES AND CONSTRUCTION ACT STATE-ADMINISTERED PROGRAM

5. The authority citation for part 770 is revised to read as follows:

Authority: 20 U.S.C. 351 *et seq.*, unless otherwise noted.

6. In § 770.4, paragraph (a) is amended by removing the clause ", except that this program may cover a period of not fewer than three nor more than five years." and the citation "(20 U.S.C. 351d)" following the term "Long-range program" and paragraph (c) is amended by revising the definitions of the terms "Act" and "Limited English-speaking proficiency" to read as follows:

§770.4 What definitions apply to the State-Administered Program?

(a) * * *

Long-range program.

* * * * *

(c) * * *

"Act" means the Library Services and Construction Act, as amended.

* * * * *

"Limited English-speaking proficiency" is defined in section 703(a) of the Bilingual Education act (20 U.S.C. 3223(a)).

* * * * *

7. In § 770.24, paragraph (b)(2)(i) is revised to read as follows:

§770.24 What must a State include in an annual program?

* * * * *

(b) * * *

(2) * * *

(i) The sum appropriated for the year (excluding the amount made available for Indian tribes and Hawaiian natives) exceeds the amount specified in section 102(c)(1) of the Act; and

* * * * *

8. In § 770.40, paragraph (d) is revised to read as follows:

§ 770.40 What are a State's financial obligations under a Library Services grant?

* * * * *

(d) If the amount of the grant (excluding the amount made available for Indian tribes and Hawaiian natives) obligates the State to allocate funds to

support and expand library services of major urban resource libraries (see sections 102(a) (3) and (c) of the Act and § 770.24(b)(2)), the State may not reduce the amount it pays to an urban resource library below the amount the State paid to that library in the preceding year.

Authority: 20 U.S.C. 351e; 353; 354.

9. In §770.43, paragraph (b) and the introductory text of paragraph (c) are revised to read as follows:

§ 770.43 What administrative costs are allowable under this program?

* * * * *

(b) The total amount the agency may spend to carry out its administrative functions under all three of these grants during any fiscal year may not exceed the greater of—

(1) Six percent of the sum of the amounts allotted to that State under Titles I, II, and III for such fiscal year; or

(2) $60,000.

(c) The agency may spend funds received under Titles I and II of the Act for administrative costs in connection with the following activities:

* * * * *

PART 771—THE LIBRARY SERVICES AND CONSTRUCTION ACT BASIC GRANTS TO INDIAN TRIBES AND HAWAIIAN NATIVES PROGRAM

10. The authority citation for Part 771 is revised to read as follows:

Authority: 20 U.S.C. 351 *et seq.*, unless otherwise noted.

11. Section 771.1 is revised to read as follows:

§ 771.1 The Library Services and Construction Act Basic Grants to Indian Tribes and Hawaiian Natives Program.

Under the Library Services and Construction Act Basic Grants to Indian Tribes and Hawaiian Natives Program—referred to in this part as the Basic Grants to Indian Tribes and Hawaiian Natives Program—the Secretary provides Federal financial assistance to establish or improve public library services for Indians residing on or near reservations, for Indian tribes and Indians in Oklahoma, California and Alaska, and for Hawaiian natives.

Authority: 20 U.S.C. 351; 351c (c)(1), (d); 361(c); 366.

12. In § 771.4, paragraph (b) is amended by revising the definitions of "Act" and "Indian tribe" to read as follows:

§ 771.4 What definitions apply to the Basic Grants to Indian Tribes and Hawaiian Natives Program?

* * * * *

(b) * * *

"Act" means the Library Services and Construction Act, as amended.

* * * * *

"Indian tribes."

(1) This term means an Indian tribe, band, nation, or other organized group or community recognized by the Secretary of the Interior to be eligible for the special programs and services provided by the United States to Indians because of their status as Indians.

(2) The term includes an Alaskan Native village or regional or village corporation as defined in or established under the Alaskan Native Claims Settlement Act.

* * * * *

13. Section 771.10 is revised to read as follows:

§ 771.10 What types of projects may be funded under this program?

(a) The Secretary provides Federal financial assistance under this program to Indian tribes and Hawaiian native organizations to conduct one or more of the following projects:

(1) Assessment of tribal or Hawaiian native library needs.

(2) In-service or preservice training of Indians or Hawaiian natives as library personnel.

(3) Salaries of library personnel.

(4) Purchase of library materials.

(5) Dissemination of information about library services.

(6) Transportation to enable Indians or Hawaiian natives to have access to library services.

(7) Conduct of special library programs for Indians or Hawaiian natives.

(8) Construction, purchase, renovation, or remodeling of library buildings, as described in paragraphs (b) and (c) of this section.

(9) Contracts to—

(i) Provide public library services to Indians living on or near reservations, to Indian tribes or Indians in Oklahoma, California, or Alaska, or to Hawaiian natives; or

(ii) Carry out any of the projects listed in paragraphs (a)(1) through (a)(8) of this section.

(b) As used in paragraph (a)(8) of this section, "construction" includes the following:

(1) Construction of new buildings.

(2) Acquisition, expansion, remodeling, or alteration of existing buildings.

(3)(i) Initial equipment for any building referred to in paragraphs (b)(1) and (b)(2) of this section.

(ii) As used in paragraph (b)(3)(i) of this section, equipment includes the following:

(A) Machinery.

(B) Utilities.

(C) Built-in equipment.

(D) Enclosures of structures necessary to house the types of items listed in paragraphs (b)(3)(ii) (A) through (C) of this section.

(E) All other items necessary for the functioning of a particular facility as a facility for the provision of library services.

(4) Within public libraries, construction of spaces that—

(i) Provide shelter from nuclear fallout; and

(ii) Are constructed at a nominal cost as part of a larger project.

(5) Any combination of activities referred to in paragraph (b)(1) through (b)(4) of this section (including architect's fees and the cost of acquisition of land).

(c) As used in this part, "remodeling" includes the following:

(1) Remodeling to meet the standards of the Architectural Barriers Act of 1968.

(2) Remodeling designed to conserve energy.

(3) Renovation or remodeling to accommodate new technologies.

(4) Purchase of existing historic buildings for conversion to public libraries.

Authority: 20 U.S.C. 351a(2); 351c(d)(2); 362; 366.

14. In § 771.20, paragraphs (b), (c), and (d) are revised to read as follows:

§ 771.20 How does an Indian tribe or an organization primarily serving and representing Hawaiian natives apply for a basic grant?

* * * * *

(b) A description of the project or projects—from among those listed in § 771.10(a)—the applicant proposes to conduct under its grant.

(c) A description of how the proposed project is likely to establish or improve public library services for—

(1) Indians living on or near a reservation;

(2) Indian tribes or Indians in Oklahoma, California or Alaska; or

(3) Hawaiian natives.

(d) In the case of an Indian tribe or Hawaiian native organization that supports a public library system, an assurance that the grantee will expend from Federal, State, and local sources an amount sufficient to meet the maintenance-of-effort requirement in § 771.40.

Authority: 20 U.S.C. 351d(g)(1); 361; 362(b); 363; 366

* * * * *

15. Section 771.40 is revised to read as follows:

§ 771.40 What are the financial obligations of a grantee that supports a public library system?

If an Indian tribe or Hawiian native organization that receives a grant under this program supports a public library system, the grantee shall expend from Federal, State, and local sources for public library services an amount not less than the amount the grantee expended from those sources for public library services during the second year preceding the year for which the Secretary has approved a grant to the grantee under this program.

Authority: 20 U.S.C. 351c(d)(2); 362(b)).

PART 772—THE LIBRARY SERVICES AND CONSTRUCTION ACT SPECIAL PROJECTS GRANTS TO INDIAN TRIBES AND HAWAIIAN NATIVES PROGRAM

16. The authority citation for Part 772 is revised to read as follows:

Authority: 20 U.S.C. 351 *et seq.*, unless otherwise noted.

17. Section 772.1 is revised to read as follows:

§ 772.1 The Library Services and Construction Act Special Projects Grants to Indian Tribes and Hawaiian Natives Program.

Under the Library Services and Construction Act Special Projects Grants to Indian Tribes and Hawaiian Natives Program—referred to in this part as the Special Projects Grants to Indian Tribes and Hawaiian Natives Program—the Secretary provides Federal financial assistance to establish or improve public library services for Indians residing on or near reservations, for Indian tribes and Indians living in Oklahoma, California and Alaska, and for Hawaiian natives.

Authority: 20 U.S.C. 351; 351c (c)(2), (d); 361(d); 366.

18. Section 772.10 is revised to read as follows:

§ 772.10 What types of projects may be funded under this program?

(a) The Secretary provides Federal financial assistance under this program to Indian tribes and Hawaiian native organizations to conduct one or more of the following projects:

(1) Assessment of tribal or Hawaiian native library needs.

(2) In-service or preservice training of Indians or Hawaiian natives as library personnel.

(3) Salaries of library personnel.

(4) Purchase of library materials.

(5) Dissemination of information about library services.

(6) Transportation to enable Indians or Hawaiian natives to have access to library services.

(7) Conduct of special library programs for Indians or Hawaiian natives.

(8) Construction, purchase, renovation, or remodeling of library buildings, as described in paragraphs (b) and (c) of this section.

(9) Contracts to—

(i) Provide public library services to Indians living on or near reservations, to Indian tribes or Indians in Oklahoma, California, or Alaska, or to Hawaiian natives; or

(ii) Carry out any of the projects listed in paragraphs (a)(1) through (a)(8) of this section.

(b) As used in paragraph (a)(8) of this section, "construction" includes the following:

(1) Construction of new buildings.

(2) Acquisition, expansion, remodeling, or alteration of existing buildings.

(3)(i) Initial equipment for any building referred to in paragraphs (b)(1) and (b)(2) of this section.

(ii) As used in paragraph (b)(3)(i) of this section, "equipment" includes the following:

(A) Machinery.

(B) Utilities.

(C) Built-in equipment.

(D) Enclosures or structures necessary to house the types of items listed in paragraphs (b)(3)(ii) (A) through (C) of this section.

(E) All other items necessary for the functioning of a particular facility as a facility for the provision of library services.

(4) Within public libraries, construction of spaces that—

(i) Provide shelter from nuclear fallout; and

(ii) Are constructed at a nominal cost as part of a larger project.

(5) Any combination of activities referred to in paragraphs (b)(1) through (b)(4) of this section (including architect's fees and the cost of acquisition of land).

(d) As used in this part, "remodeling" includes the following:

(1) Remodeling to meet the standards of the Architectural Barriers Act of 1968.

(2) Remodeling designed to conserve energy.

(3) Renovation or remodeling to accommodate new technologies.

(4) Purchase of existing historic buildings for conversion to public libraries.

Authority: 20 U.S.C. 351a(2); 351c(c)(2), (d)(2); 361(d); 362; 366, EO 11490, as amended.

19. In § 772.20, paragraphs (b)(2), (c)(3)(i)(A), and (c)(3)(iii)(B) are revised to read as follows:

§ 772.20 How does an Indian tribe or an organization primarily serving and representing Hawaiian natives apply for a special projects grant?

* * * * *

(b) * * *

(2) The project or projects the applicant proposes to carry out in its plan must be from among those listed in § 772.10(a).

(c) * * *

(3) * * *

(i) * * *

(A) Indians living on or near a reservation or Indians in Oklahoma, California or Alaska; or

(B) Hawaiian natives.

* * * * *

(iii) * * *

(B) The project or projects must be from among those listed in § 772.10(a).

* * * * *

Authority: 20 U.S.C. 351c(c)(2), (d)(2); 351d(g)(2); 361; 362; 364; 366.

* * * * *

20. In § 772.31, paragraphs (f)(1), and (f)(2)(iv)(A) are revised to read as follows:

§ 772.31 What selection criteria does the Secretary use?

* * * * *

(f) * * *

(1) The Secretary reviews each application to determine the need for the applicant to carry out the proposed public library services from among the projects listed in § 772.10(a).

(2) * * *

(iv) * * *

(A) Indians living on or near a reservation or Indians in Oklahoma, California, or Alaska; or

* * * * *

Authority: 20 U.S.C. 351c(c)(2), (d)(2); 351d(g)(2); 361(d); 364; 366.

* * * * *

21. Section 772.41 is revised to read as follows:

§ 772.41 What are the additional financial obligations of a grantee that supports a public library system?

If an Indian tribe or Hawaiian native organization that receives a grant under this program supports a public library system, the grantee shall expend from Federal, State, and local sources for public library services an amount not less than the amount the grantee expended from those sources for public library services during the second year preceding the year for which the

Secretary has approved a grant to the grantee under this program.

Authority: 20 U.S.C. 351c(d)(2); 362(b).

[FR Doc. 86-11320 Filed 5-20-86; 8:45 am]

[BILLING CODE 4000-01-M

ENVIRONMENTAL PROTECTION AGENCY

40 CFR Part 180

[PP 5F3267/R841 (FRL-3016-3)]

Pesticide Tolerance for Aluminum Tris(O-Ethylphosphonate)

AGENCY: Environmental Protection Agency (EPA).

ACTION: Final rule.

SUMMARY: This rule establishes a tolerance for residues of the fungicide aluminum tris(O-ethylphosphonate) in or on citrus. The regulation was requested by Rhone-Poulenc, Inc. This regulation will allow the presence of residues of the fungicide in or on citrus resulting from the foliar application to citrus.

EFFECTIVE DATE: Effective on May 21, 1986.

ADDRESS: Written objections, identified by the document number [PP 5F3267/R841], may be submitted to the: Hearing Clerk (A-110), Environmental Protection Agency, Rm. 3708, 401 M Street SW., Washington, DC 20460.

FOR FURTHER INFORMATION CONTACT:

By mail: Henry M. Jacoby, Product Manager (PM) 21, Registration Division (TS-767C), Office of Pesticide Programs, 401 M Street SW., Washington, DC 20460.

Office location and telephone number: Rm. 227, CM No. 2, 1921 Jefferson Davis Highway, Arlington, VA 22202, (703-557-1900).

SUPPLEMENTARY INFORMATION: EPA issued a notice, published in the **Federal Register** of July 31, 1985 (50 FR 31026), which announced that Rhone-Poulenc, Inc., Agrochemical Division, P.O. Box 125, Monmouth Junction, NJ 08852, had submitted pesticide petition 5F3267 to the Agency proposing that the Administrator amend 40 CFR 180.415 by establishing a tolerance for residues of the fungicide aluminum tris(*O*-ethylphosphonate) in or on the raw agricultural commodity citrus at 0.1 part per million (ppm).

No comments were received in response to the notice of filing.

The data submitted in the petition and all other relevant material have been evaluated. The Agency concludes that the tolerance is adequate to protect the public health.

The toxicology data considered in support of the tolerance include:

1. An oncogenicity study in mice with no oncogenic effects induced at any dose level under the conditions of the study (the highest dose tested was 2,857/4,286 mg/kg body weight/day).
2. A rat chronic feeding/oncogenic study with a NOEL of 100 mg/kg body weight/day for systemic effects (oncogenic effects observed are discussed below).
3. A dog feeding study with a no-observed-effect level (NOEL) of 250 mg/kg body weight/day.
4. A reproduction study in rats with a NOEL of 300 mg/kg body weight/day.
5. Teratology studies in rabbits and rats with the teratogenic NOEL's of 500 mg/kg/day and 1,000 mg/kg/day respectively.
6. Ames mutagenicity assays, *E. Coli* phage induction tests, micronucleus tests in mice, DNA repair tests using *E. Coli*, and *Saccharomyces cervisiae* yeast assay that were all negative for mutagenic effects.

As stated in a notice, published in the **Federal Register** of November 2, 1983 (48 FR 50532), oncogenic effects were noted in the rat chronic feeding/ocogenic study. In this study, Charles River CD rats were dosed with aluminum tris(*O*-ethylphosphonate) at levels of 0, 2,000, 8,000 and 40,000/30,000 ppm for 2 years. The high dose level was reduced to 30,000 ppm after 2 weeks following observations of staining of the abdominal fur and red coloration of the urine at 40,000 ppm.

The highest dose level of the chemical tested in the male Charles River CD-1 rats (40,000/30,000 ppm) in this study appeared to approximate a maximum tolerated dose (MTD) based on the finding of hyperplasia at this dose. Similarly, a MTD level appeared to be satisfied in the female Charles River CD-1 rats at the high dose level of 40,000/30,000 ppm because of the weight loss (about 10 percent) incurred at 40,000 ppm during the first two weeks of the oncogenicity/chronic feeding study before the dose level was reduced to 30,000 ppm.

The study demonstrated a significantly elevated incidence of urinary bladder tumors (adenomas and carcinomas combined) at the highest dose level tested (40,000/30,000 ppm) in male Charles River CD-1 rats. The tumors were mainly seen in surviving males at the time of terminal sacrifice. The original pathological diagnosis of these tumors was independently confirmed by another consulting pathologist, who also reported an elevated incidence of urinary bladder hyperplasia in high dose male rats. No urinary bladder tumors were produced in female rats.

Based on the diagnosis of the pathologist at the test laboratory where the study was performed, aluminum tris(*O*-ethylphosphonate) appeared to produce a significantly elevated incidence of pheochromocytomas (adenomas and carcinomas combined) at the mid (8,000 ppm) and high (40,000/30,000 ppm) dose levels in the male Charles River CD-1 rats. The elevated pheochromoncytoma incidence was primarily due to an increase in the adenomas. This diagnosis was not confirmed by two other pathologists who reevaluated the data. These consulting pathologists reread the adrenal gland slides and did not find statistically significant dose-related increases in the incidence of pheochromocytomas to the male rats. The Agency attributed the difference in the pathological diagnoses to the fact that a high degree of variability exists in the interpretation of adrenal medullary neoplasia compared to adrenal medullary hyperplasia in identifying pheochromocytomas. None of the three pathologists reported a statistically significant increase in the combined incidence of the three types of adrenal medullary lesions (i.e., adenomas, carcinomas, and hyperplasia).

Based on the available information, the Agency concluded that aluminum tris (*O*-ethylphosphonate) did not produce pheochromocytomas in the high dose male rats. No adrenal gland tumors were produced in female rats.

The Agency has concluded that the available date provides limited evidence for the oncogenicity of aluminum tris (*O*-ethylphosphonate) in male rats, and has classified the pesticide as a Category C oncogen (possible human carcinogen with limited evidence of carcinogenicity in animals) in accordance with proposed Agency guidelines, published in the **Federal Register** of November 23, 1984 (49 FR 46294). This classification is based on the conclusion that the pesticide produced oncogenic effects at the highest tolerated dose in only one sex and species of experimental animal. In reaching this conclusion, the Agency also considered that the pesticide did not show any positive responses in a variety of short term tests for mutagenicity, and did not produce positive oncogenic results when administrated in the diet to Charles River CD mice at dose levels ranging from 25,000 to 30,000 ppm. Similarly, the urinary metabolite of the chemical,

namely monosodium phosphite was not oncogenic when administered in the diet to Charles River CD rats at dose levels ranging from 2,000 to 32,000 ppm.

Based on the urinary bladder tumors, the estimated worst case oncogenic risk for this tolerance is in the range of 10^{-7} to 10^{-8}. This calculation is based on the assumption that residues are present at the tolerance level and that 100% of crop is treated. It is expected that the actual risk will be much lower.

Using a 100 fold safety factor and the NOEL of 100 mg/kg body weight/day determined by the 2-year rat feeding study, the allowable daily intake (ADI) is 1.0 mg/kg body weight/day. The maximum permissible intake (MPI) for a 60-kg person is 60.0 mg/day. The tolerance on citrus results in a theoretical maximum residue contribution (TMRC) of 0.0062 mg for 1.5 kg diet and utilizes less than 0.01 percent of the ADI.

The metabolism of aluminum tris (*O*-ethylphosphonate) is adequately understood. There is no reasonable expectation of residues occuring in milk and meat of livestock or poultry. An adequate enforcement method exists for this tolerance.

Based on the above information considered, the Agency concludes that establishing the tolerance will protect the public health. Therefore, the tolerance is established as set forth below.

Any person adversely affected by this regulation may, within 30 days after the date of publication of this notice in the **Federal Register**, file written objections with Hearing Clerk, at the address given above. Such objections should be submitted in quintuplicate and specify the provisions of the regulation deemed objectionable and the grounds for the objections. If a hearing is requested, the objections must state the issues for the hearing. A hearing will be granted if the objections are supported by ground legally sufficient to justify the relief sought.

The Office of Management and Budget has exempted this rule from the requirements of section 3 of Executive Order 12291.

Pursuant to the requirements of the Regulatory Flexibility Act (Pub. L. 96-354, 94 Stat. 1164, 4 U.S.C. 601-612), the Administrator has determined that regulations establishing new tolerances or raising tolerance levels or establishing exemptions from tolerance requirements do not have a significant economic impact on a substantial number of small entities. A certification statement to this effect was published in the **Federal Register** of May 4, 1981 (46 FR 24950).

List of Subjects in 40 CRF Part 180

Administrative practice and procedures, Raw agricultural commodities, Pesticides and pests.

Dated: May 8, 1986.

Steve Schatzow,

Director, Office of Pesticide Programs.

PART 180—[AMENDED]

Therefore, 40 CFR 180.415 is amended as follows:

1. The authority citation for Part 180 continues to read as follows:

Authority: 21 U.S.C. 346a.

2. Section 180.415 is amended by adding, and alphabetically inserting the commodity citrus to read as follows:

§ 180.415 Aluminum tris(O-ethylphosphonate); tolerances for residues.

* * * * *

Commodities	Parts per million
* * * * *	
Citrus	0.1
* * * * *	

[FR Doc. 86-10940 Filed 5-20-86; 8:45 am]

BILLING CODE 6560-50-M

DEPARTMENT OF THE INTERIOR

Bureau of Land Management

43 CFR Public Land Order 6615

[F-031025]

Alaska; Partial Revocation of Public Land Order Nos. 715 and 5187, as Amended; Lands Made Available for Conveyance to Kaktovik Inupiat Corporation and Arctic Slope Regional Corporation

AGENCY: Bureau of Land Management, Interior.

ACTION: Public Land Order.

SUMMARY: This order revokes two public land orders insofar as they affect 103 acres of land within the Arctic National Wildlife Refuge and make the lands available for selection by and conveyance to Kaktovik Inupiat Corporation and Arctic Slope Regional Corporation. The lands remain closed to all other forms of appropriation under the public land laws, including the mining and mineral leasing laws.

EFFECTIVE DATE: May 21, 1986.

FOR FURTHER INFORMATION CONTACT: Mary Jane Clawson, BLM Alaska State Office, 701 C Street, Box 13, Anchorage Alaska 99513, (907-271-5060).

SUPPLEMENTARY INFORMATION: By virtue of the authority vested in the Secretary of the Interior by section 204(a) of the Federal Land Policy and Management Act of 1976, 43 U.S.C. 1714, it is ordered as follows:

1. Public Land Order No. 715 of April 20, 1951, as amended, which withdrew lands for the use of the Department of the Air Force for military purposes, and Public Land Order No. 5187 of March 15, 1972, which withdrew lands in military reservations for classification and protection of the public interest, are hereby revoked insofar as they affect the following described lands:

Barter Island DEW Station

Umiat Meridian

A parcel of land situated within sections 18 and 19, Township 9 North, Range 34 East, Umiat Meridian, Barrow Recording District, Second Judicial District, State of Alaska; said parcel being more particularly described as follows:

COMMENCING at a point in section 18, Township 9 North, Range 34 East, Umiat Meridian, said point being common with Corner Point Number Three of U.S. Survey No. 4234, Townsite of Kaktovik;

Thence South 01°24' East, a distance of 902.80 feet, more or less, along the west boundary of said survey to the TRUE POINT OF BEGINNING;

Thence North 66°47'50" West, a distance of 275.00 feet, more or less;

Thence North 24°58'30" West, a distance of 250.00 feet, more or less;

Thence North 01°24' West, a distance of 115.50 feet, more or less;

Thence North 33°27' East, a distance of 175.00 feet, more or less;

Thence South 88°36' West, a distance of 550.00 feet, more or less;

Thence South 01°24' East, a distance of 2,008.96 feet, more or less;

Thence South 35°24' East, a distance of 3,520.00 feet, more or less;

Thence East, a distance of 1,250.00 feet, more or less, to a point on the Mean High Water Line of Kaktovik Lagoon;

Thence northeasterly, along the Mean High Water Line of said lagoon, to Meander Corner Number 1 of U.S. Survey No. 4234;

Thence North 35°24' West, along the southwesterly boundary of said survey, a distance of 219.65 feet, to the W.C.M.C. No. 1 of said survey;

Thence South 54°26' West, a distance of 360.00 feet, more or less;

Thence North 35°24' West, a distance of 3,588.65 feet, more or less;

Thence North 01°24' West, a distance of 1,275.00 feet, more or less, to the True Point of Beginning.

The area described contains approximately 103 acres.

2. The surface estate of the lands described in paragraph 1 may be

selected by and conveyed to Kaktovik Inupiat Corporation under the provisions of subsection 1431(g)(3) of the Alaska National Interest Lands Conservation Act (ANILCA). If the surface estate is selected by and conveyed to Kaktovik Inupiat Corporation, the subsurface estate of the same lands will be conveyed to Arctic Slope Regional Corporation in accordance with paragraph 3(c) of the agreement between Arctic Slope Regional Corporation and the United States of America of August 9, 1983.

3. The lands described in paragraph 1 of this order were withdrawn by Public Land Order No. 2214 of December 6, 1960, as part of the Arctic National Wildlife Range and were included as a part of the Arctic National Wildlife Refuge as established by subsection 303(2)(A) of the ANILCA, 16 U.S.C. 668dd. The lands remain closed to all other forms of appropriation under the public land laws, including the mining and mineral leasing laws except selection by the Native Village of Kaktovik Inupiat Corporation under the provision of section 1431(g)(3) of the ANILCA 94 Stat. 2371 at 2539. If these lands are conveyed to Kaktovik Inupiat Corporation and the subsurface is conveyed to Arctic Slope Regional Corporation, the lands will remain subject to the provisions of section 22(g) of the Alaska Native Claims Settlement Act, 85 Stat. 688 at 714 in accordance with the provisions of section 1431(g)(3) of the ANILCA.

J. Steven Griles,

Assistant Secretary of the Interior.

May 12, 1986

[FR Doc. 86-11375 Filed 5-20-86; 8:45 am]

BILLING CODE 4310-84-M

DEPARTMENT OF DEFENSE

48 CFR Parts 232 and 252

Department of Defense Federal Acquisition Regulation Supplement; Limitation of Progress Payments; Correction

AGENCY: Department of Defense (DoD).

ACTION: Final rule; correction.

SUMMARY: This document corrects language contained in a final rule which was published April 21, 1986 (51 FR 13513).

FOR FURTHER INFORMATION CONTACT: Mr. Charles W. Lloyd, Executive Secretary, DAR Council, ODASD(P)/DARS, c/o OASD(A&L)(MRS), Room 3C841, The Pentagon, Washington, DC 20301-3062, telephone (202) 697-7266.

Charles W. Lloyd,

Executive Secretary Defense Acquisition Regulatory Council.

The Department of Defense is correcting language published at 51 FR 13513, April 2, 1986, to read as follows:

1. Section 232.502-4 is corrected by revising paragraph (S-73) to read as follows:

232.502-4 Contract Clauses.

* * * * *

(S-73) If the contract is with a small business concern, the contracting officer shall use the clause at 252.232-7007, Progress Payments, with its Alternate I.

* * * * *

2. Section 252.232-7007 is corrected by revising paragraph (j)(3)(i) of the clause, and by removing from the introductory text of Alternate I of the clause the parenthetical reference "(see FAR 32.501-1)", to read as follows:

252.232-7007 Progress Payments.

* * * * *

(j) * * *

(3) * * *

(i) Are substantially similar to the terms of this clause (or this clause with its Alternate I) for any subcontractor that is a small business concern;

* * * * *

[FR Doc. 86-11384 Filed 5-20-86; 8:45 am]

BILLING CODE 3810-01-M

48 CFR Part 246

Department of Defense, Federal Acquisition Regulatory Supplement; Weapon Systems Warranties

AGENCY: Department of Defense (DoD).

ACTION: Final rule.

SUMMARY: The DAR Council has approved changes to DoD FAR Supplement Part 246. Defense Acquisition Circular (DAC) # 84-9, published in the Federal Register on 3 January 1985 (50 FR 274, January 3, 1985), provided interim guidance for the implementation of the requirements of 10 U.S.C. 2403, weapon systems warranties. Public comments on the rule were reviewed and considered in the formulation of this final rule.

EFFECTIVE DATE: May 19, 1986.

FOR FURTHER INFORMATION CONTACT: Mr. Charles W. Lloyd, Executive Secretary, DAR Council, ODASD(P)/DARS, c/o OASD(A&L) (MRS), Room 3C841, The Pentagon, Washington, DC 20301-3062, telephone (202) 697-7266.

SUPPLEMENTARY INFORMATION:

A. Background

Changes made in the temporary rule include: (1) A statement recognizing the relationship of the weapon system development program and production warranties; (2) a minor change to the definition of "essential performance requirements"; (3) addition of a reference to "repair, replace and redesign" as available warranty remedies; (4) an expansion of the discussion of the items appropriate for tailoring; (5) a revision of the language concerning the applicability of DFARS 246.770 to FMS procurements; (6) an expansion of the discussion of cost-benefit analysis; (7) various clarifications in the requirement for processing waivers; (8) relocating subsection 246.770-10(a) to 246.710(f); and (9) various administrative corrections.

The DoD FAR Supplement is codified in Chapter 2, Title 48 of the Code of Federal Regulations.

The October 1, 1985 revision of the CFR is the most recent edition of that title. It reflects amendments to the 1984 edition of the DoD FAR Supplement made by Defense Acquisition Circulars 84-1 through 84-10.

Interested parties may submit proposed revisions to this Supplement directly to the DAR Council.

B. Regulatory Flexibility Act Information

The Department of Defense certifies that the change to DFARS 246.7 does not have a significant economic impact on a substantial number of small entities under the Regulatory Flexibility Act (5 U.S.C. 601 et seq.) because the very limited number of small entities that may be required to provide warranties on weapon systems will be able to include the cost of warranty in their contract prices.

C. Paperwork Reduction Act Information

The rule does not contain information collection requirements which require the approval of OMB under 44 U.S.C. 3501 et seq.

List of Subjects in 48 CFR Part 246

Government procurement.

Charles W. Lloyd,

Exective Secretary, Defense Acquisition Regulatory Council.

Adoption of Amendments

Therefore, the DoD FAR Supplement contained in 48 CFR Chapter 2 is amended as set forth below.

PART 246—QUALITY ASSURANCE

1. The authority for 48 CFR Part 246 continues to read as follows:

Authority: 5 U.S.C. 10 U.S.C. 2202, DoD Directive 5000.35, and DoD FAR Supplement 201.301.

246.701 [Amended]

2. Section 246.701 is amended by changing the word "Defect" at the beginning of the second undesignated paragraph to "Defects".

3. Section 246.702 is amended by revising paragraph (d) to read as follows:

246.702 General.

(d) Planning is an essential step in obtaining an effective warranty. To be effective, warranties should be implemented as an integral part of an overall design, development, test, and production program.

* * * * *

246.703 [Amended]

4. Section 246.703 is amended by removing the last sentence.

5. Section 246.710 is added to read as follows:

246.710 Contract clauses.

(f) In accordance with 246.708, the contracting officer may insert a clause substantially the same as the clause at 252.246–7001, Warranty of Data, in solicitations and contracts when a fixed-price or cost-reimbursement contract is contemplated that will require data to be furnished. When this clause is not used, technical data is warranted under the clauses at FAR 52.246–3, Inspection of Supplies—Cost-Reimbursement; FAR 52.246–6, Inspection—Time and Material and Labor Hour; FAR 52.246–8, Inspection of Research and Development—Cost-Reimbursement; and FAR 52.246–19, Warranty of Systems and Equipment Under Performance Specifications or Design Criteria.

(1) If extended liability is desired and a fixed-price incentive contract is contemplated, the contracting officer may use the clause with its Alternate I.

(2) If extended liability is desired and a firm fixed-price contract is contemplated, the contracting officer may use the clause with its Alternate II.

246.770-1 [Amended]

6. Section 246.770–1 is amended by inserting the word "/or" between the word "capabilities and" and the word "maintenance" in the third undesignated paragraph; and by changing the word "terms" in the last sentence of the last undesignated paragraph to "term".

246.770-2 [Amended]

7. Section 246.770–2 is amended by removing the word "that" between the words "event" and "the" in subparagraph (a)(2); and by adding in subparagraph (a)(2)(i) between the words "necessary" and "at" the parenthetical phrase "(repair, replace and/or redesign)".

8. Section 246.770–3 is revised to read as follows:

246.770-3 Tailoring warranty terms and conditions.

As the objectives and circumstances vary considerably among weapon system acquisition programs, contracting officers shall appropriately tailor the required warranties on a case-by-case basis, including remedies, exclusions, limitations, and duration; *Provided*, such are consistent with the specific requirements of this section (see also FAR 46.706). The duration specified in any warranty should be clearly related to the contract requirements and allow sufficient time to demonstrate achievement of the requirements after acceptance. Contracting officers may exclude from the terms of the warranty certain defects for specified supplies (exclusions) and may limit the contractor's liability under the terms of the warranty (limitations), as appropriate, if necessary to derive a cost effective warranty in light of the technical risk, contractor financial risk, or other program uncertainties. All subsystems and components will be procured in such a manner so as not to invalidate the weapon system warranty. Contracting officers are encouraged to structure broader and more comprehensive warranties where such are advantageous and in accordance with agency policy. Likewise, the contracting officer may narrow the scope of a warranty where such is appropriate (e.g., where it would be inequitable to require a warranty of all essential performance requirements because a contractor had not designed the system). It is Department of Defense policy not to include in warranty clauses any terms that cover liability for loss, damage or injury to third parties.

246.770-4 [Amended]

9. Section 246.770–4 is amended by changing the word "superceded" in the last sentence to "superseded".

246.770-6 [Amended]

10. Section 246.770–6 is amended by revising the reference reading "46.770–2(a)(3)" to read "46.770–2(a)(1)(iii)".

11. Section 246.770–7 is revised to read as follows:

246.770-7 Applicability to FMS.

The warranty requirements of 246.770–2 are not mandatory for FMS production contracts. For all weapon systems procured for FMS requirements, the policy of the Department of Defense should be to obtain the same warranties on conformance to design and manufacturing requirements and against defects in materials and workmanship that are obtained for U.S. supplies. DoD will not normally obtain essential performance warranties for FMS purchasers. However, where the cost for the warranty of essential performance requirements cannot be practically separately identified, the foreign purchaser may be provided the same warranty that is obtained on the same equipment purchased for the U.S. If the FMS purchaser expressly requests a performance warranty in the Letter of Offer and Acceptance (LOA), the United States will exert its best efforts to obtain the same warranty obtained on U.S. equipment or, if specifically requested by the FMS purchaser, a unique warranty. It is anticipated that the costs for warranties for FMS purchasers may be different from the costs for such warranties for the United States due to such factors as overseas transportation and any tailoring to reflect the unique aspects of the FMS purchaser. Special care must be exercised to ensure that the FMS purchaser shall bear all of the acquisition and administration costs of any warranties obtained.

12. Section 246.770–8 is revised to read as follows:

246.770-8 Cost-benefit analysis.

It is Department of Defense policy to only obtain warranties that are cost effective. If a specific warranty is considered not to be cost effective by the contracting officer, a waiver request shall be initiated under 246.770–9. In assessing the cost effectiveness of a proposed warranty, an analysis must be performed which considers both the quantitative and qualitative costs and benefits of the warranty. Costs include the warranty acquisition, administration, enforcement and user costs, weapon system life cycle costs with and without a warranty, and any costs resulting from limitations imposed by the warranty provisions. Costs incurred during development specifically for the purpose of reducing production warranty risks should also

be considered. Similarly, the cost-benefit analysis must also consider logistical/operational benefits expected as a result of the warranty as well as the impact of the additional contractor motivation provided by the warranty. Where possible, comparison should be made with the costs of obtaining and enforcing similar warranties on similar systems. The analysis should be documented in the contract file.

13. Section 246.770–9 is amended by inserting the words "to be" between the words "warranty" and "obtained" in the first sentence of the introductory paragraph; by revising the title in the second sentence of the introductory paragraph reading "Under Secretary of Defense (Research and Engineering)" to read "Assistant Secretary of Defense (Acquisition and Logistics)"; by revising subparagraph (d)(1)(ii); by adding subparagraph (d)(1)(iii); and by revising paragraph (d)(4) to read as follows:

246.770-9 Waiver and notification procedures.

* * * * *

(d)(2)

* * * * *

(ii) The specific warranty or warranties required by 246.770–2(a)(1) for which the waiver is requested, the duration of the waiver if it is to go beyond the instant contract, and rationale for the waiver.

(iii) A description of the warranties or other techniques to be employed to assure acceptable field performance of the weapon system.

* * * * *

(4) A copy of each notification and report to Congress shall be submitted concurrently to the Assistant Secretary of Defense (Acquisition and Logistics). For Class waivers this copy shall be submitted in advance of the transmittal to Congress.

246.770-10 [Amended]

14. Section 246.770–10 is amended by removing paragraph (a), subparagraphs (a)(1) and (a)(2) and by redesignating the existing paragraph (b) as paragraph (a).

[FR Doc. 86–11385 Filed 5–20–86; 8:45 am]

BILLING CODE 3810-01-M

INTERSTATE COMMERCE COMMISSION

49 CFR Part 1002

[EX Parte No. 246 (Sub #3)]

Regulations Governing Fees for Services Performed in Connection With Licensing and Related Services; 1985 Update; Clarification

AGENCY: Interstate Commerce Commission.

ACTION: Final rule.

SUMMARY: Through these final rules the Commission clarifies its fee schedule to make the filing fee previously adopted for certain exempt rail transactions [See 49 FR 18491 (5–1–84), 49 FR 39548 (10–9–84), and 50 FR 40026 (11–1–85)] applicable to exemptions involving acquisition and operation of certain rail lines under 49 U.S.C. 10901 established in Ex Parte No. 392 (Sub-No. 1), *Class Exemption For The Acquisition and Operation of Rail Lines Under 49 U.S.C. 10901*, 51 FR 2503, (1-17-86), or exemptions of railroads from securities regulations under 49 U.S.C. 11301 adopted in Ex Parte No. 397, *Exemption of Railroads From Securities Regulations Under 49 U.S.C. 11301*, 51 FR 4927 (2–10–86).

EFFECTIVE DATE: Upon publication in the **Federal Register**, on May 21, 1986.

FOR FURTHER INFORMATION CONTACT: Kathleen M. King, (202) 275–7428.

SUPPLEMENTARY INFORMATION: We believe that good cause exists under 5 U.S.C. 553(b) to make these fee schedule modifications effective immediately without public notice and comment. The new exemption procedures are already in effect. The fee that we are adopting has been established previously for notice of exemption proceedings through notice and comment in Ex Parte No. 246 (Sub-No. 2) *Regulations Governing Fees For Services Performed In Connection with Licensing and Related Services*, 49 FR 18491 (5–1–85). We are simply applying the fee to new notice of exemption categories. Immediate implementation of this fee change will remove any uncertainty about the appropriate fee for these new procedures and provide the public with a reduced fee for these procedures.

Accordingly, we find that good cause exists to waive notice and comment in this proceeding and to have these fee modifications become effective immediately because any delay in implementing this reduced fee would be contrary to the public interest.

This action will not have a significant economic impact on a substantial number of small entities because we are merely adopting an existing fee for a similar procedure.

This action will not significantly affect either the quality of the human environment or conservation of energy resources.

Appendix

List of Subjects in 49 CFR Part 1002

Administrative practice and procedure, Freedom of Information.

PART 1002—[AMENDED]

In 49 CFR 1002.2 paragraphs (f)(33) and (f)(54) are revised to read as follows:

1. The authority citation for Part 1002 continues to read as follows:

Authority: 5 U.S.C. 553, 31 U.S.C. 9701, 49 U.S.C. 10321.

2. Paragraphs (f)(33) and (54) of § 1002.2 are revised to read as follows:

§ 1002.2 Filing fees.

* * * * *

Type of proceeding	Fees
* * * * *	
(f) * * *	
(33)(a) An application for a certificate authorizing the construction, extension, acquisition, or operation of lines of railroad 49 U.S.C. 10901	2,100
(b) Exempt transaction under 49 CFR 1150.31	450
* * * * *	
(54)(a) An application to issue securities, an application to assume obligation or liability in respect of the securities of another, an application or petition for modification of an outstanding authorization, or an application for exemption for competitive bidding requirements of ExParte No. 158, 49 U.S.C. 11301	950
(b) exempt transaction under 49 CFR Part 1175	450
* * * * *	

Decided: May 9, 1986.

By the Commission, Chairman Gradison, Vice Chairman Simmons, Commissioners Sterrett, Andre, and Lamboley.

James H. Bayne,

Secretary.

[FR Doc. 86–11380 Filed 5–20–86; 8:45 am]

BILLING CODE 7035-01-M

Proposed Rules

Federal Register
Vol. 51, No. 98
Wednesday, May 21, 1986

This section of the FEDERAL REGISTER contains notices to the public of the proposed issuance of rules and regulations. The purpose of these notices is to give interested persons an opportunity to participate in the rule making prior to the adoption of the final rules.

DEPARTMENT OF AGRICULTURE

Agricultural Marketing Service

7 CFR Part 46

Increase in License Fees

AGENCY: Agricultural Marketing Service, USDA.

ACTION: Notice of proposed revision of regulations.

SUMMARY: The Department of Agriculture proposes a revision of the Regulations (other than Rules of Practice) under the Perishable Agricultural Commodities Act which increases the license fee. The purpose of the revision is to cover increased operating costs associated with administration of the program.

DATE: Written comments on this proposal should be filed by June 20, 1986.

ADDRESS: Written comments should be sent to Michael A. Clancy, P.A.C.A. Branch, Fruit and Vegetable Division, AMS, Room 2715, USDA, Washington, DC 20250.

FOR FURTHER INFORMATION CONTACT: Michael A. Clancy, Head, License Section, P.A.C.A. Branch, Fruit and Vegetable Division, AMS, USDA, Washington, DC 20250, Phone (202) 447-2814.

SUPPLEMENTARY INFORMATION: This proposed action has been reviewed under the USDA procedures established in the Secretary's Memorandum 1512-1 and supplemental memorandum dated March 5, 1980, to implement Executive Order 12291 and has been classified as "non-major" because it does not meet any of the criteria identified under the Executive Order. The proposed action will not have an annual effect on the economy of $100 million or more, nor will it result in a major increase in costs or prices. The Administrator of the Agricultural Marketing Service has determined that the proposal is in response to an emergency funding situation and as such is considered to be an agency management decision.

Background

The Perishable Agricultural Commodities Act was enacted by Congress in 1930 so as to establish a code of fair trading practices covering the marketing of fresh and frozen fruits and vegetables in interstate or foreign commerce. It protects growers, shippers and distributors dealing in those commodities by prohibiting unfair and fraudulent practices.

The law provides for the enforcement of contracts by providing for the collection of damages from anyone who fails to meet contractual obligations. On May 7, 1984, an amendment to the PAC Pub. L. 98-273, impressed a statutory trust on licensees for perishable agricultural commodities received, products derived from, and any receivables or proceeds due from the sale of the commodities for the benefit of suppliers, sellers or agents who have not been paid.

The PACA is enforced through a licensing system. All commission merchant, dealers and brokers engaged in business subject to the Act must be licensed. The cost of administering the Act is financed entirely through the license fees paid by those engaging in business subject to the law. The Secretary is charged with setting the license fee at a level necessary to meet the expenses of administration within the maximum provided in the law by Congress. Amendments to the Act in 1981, permitted the Secretary to assess a base annual fee of up to $300 plus an assessment of up to $150 for each branch operation exceeding nine. The maximum aggregate annual license fee for any firm cannot exceed $3,000.

The administration of the new trust statute has increased the workload under the program along with related travel expenses. There has also been a significant increase in the filings of reparation actions by injured parties to recover damages under their contract. As a result, costs incurred by the program during Fiscal Year 1985, exceeded revenue by approximately $125,000. It is anticipated that the workload and travel requirements will continue to increase as more growers, shippers and distributors seek to utilize the benefits and protection of the new statute. Under the current fee assessment, it is estimated that the program will incur an additional deficit in excess of $200,000 by end of Fiscal Year 1986.

In order to assure continued and effective administration of the program, the license fees for firms dealing in commodities subject to the Perishable Agricultural Commodities Act must be amended to reflect the increased costs associated with the program in the coming fiscal years. The current license fee is $180 plus $72 for each branch or additional business facility operated by the applicant exceeding nine. The Secretary has determined that an increase in such fees to $216 and $108, respectively will cover the costs of the program, plus provide a reasonable reserve.

List of Subjects in 7 CFR Part 46

Agriculture commodities.

PART 46—[AMENDED]

1. The authority citation for Part 46 continues to read as follows:

Authority: Section 15, 46 State. 537; 7 U.S.C. 4990.

2. Section 46.6 is revised to read as follows:

§ 46.6 License fee.

The annual license fee is two hundred and sixteen (216) dollars plus one hundred eight (108) dollars for each branch or additional business facility operated by the applicant exceeding nine. In no case shall the aggregate annual fees paid by any applicant exceed one thousand eight hundred (1,800) dollars. The Director may require that the fee be submitted in the form of a money order, bank draft, cashier's check or certified check made payable to Agricultural Marketing Service. Authorized representatives of the Department may accept fees and issue receipts therefore.

Done at Washington, DC, on May 8, 1986.

William T. Manley,
Deputy Administrator, Marketing Programs.

[FR Doc. 86-10845 Filed 5-20-86; 8:45 am]
BILLING CODE 3410-02-M

DEPARTMENT OF JUSTICE

Immigration and Naturalization Service

8 CFR PARTS 212 and 214

Documentary Requirements for Nonimmigrants; Waivers, Admission of Certain Inadmissible Aliens, Parole

AGENCY: Immigration and Naturalization Service, Justice.

ACTION: Proposed Rule.

SUMMARY: This proposed rule would amend regulations of the Immigration and Naturalization Service relating to temporary alien workers seeking classification under section 101(a)(15)(H)(i) and section 101(a)(15)(L) of the Immigration and Nationality Act, 8 U.S.C. 1101. The purpose of this proposed rule is to clarify and conform Service policy to the intent of Congress as it relates to these classes of nonimmigrants and to facilitate the entry into the United States of certain nonimmigrants needed by international businesses and other organizations which petition on their behalf.

A main objective of the rule is to clarify requirements for classification, admission, and maintenance of status under section 101(a)(15)(L) and to modify the blanket petition procedures to make it more useful to businesses. Under this classification, an alien employee of a qualifying organization may be admitted temporarily to the United States to continue employment with his/her same employer or an affiliate or subsidiary of that employer in a managerial, executive, or specialized knowledge capacity. An alien transferred to the United States under this nonimmigrant classification is referred to as an intracompany transferee, and the organization which seeks the classification of an alien as an intracompany transferee is referred to as the qualifying organization. The rule would modify the blanket petition program to expand the criteria which petitioners must meet to file a blanket petition, broaden the class of aliens who seek L classification against blanket petitions, and reduce documentation requirements for petitioners. To facilitate the classification of aliens as intracompany transferees under blanket petitions, all beneficiaries of blanket petitions outside the United States, including Canadian nationals, would be required to apply for classification under section 101(a)(15)(L) and obtain a visa from a United States consular officer abroad. Determinations of L classification under blanket petitions would be made by the Service for those aliens who are already in the United States and requesting an extension of stay or change of status from some other nonimmigrant classification.

This rule would also revise H-1 and L requirements to change admission and/or extension time periods for an alien's stay in the United States, define temporariness, and clarify Service policy regarding the effect which approval of a labor certification or the filing of a preference petition has on the alien's H-1 or L nonimmigrant status.

Other technical changes designed to establish uniformity in the application of Service policy and to curb abuses in the H-1 and L classifications are proposed.

We believe that these revisions would reflect the intent of Congress in 1970 when it modified section 101(a)(15)(H)(i) and enacted section 101(a)(15)(L); would clarify Service policy in these nonimmigrant categories; and would benefit the public by facilitating the admission of needed personnel. These amendments would also allow businesses to plan their use of foreign personnel in these categories with a greater degree of certainty.

DATE: Interested persons are invited to submit written comments on this proposed rule on or before July 21, 1986.

ADDRESS: Please submit written comments in duplicate to the Director, Policy Directives and Instructions, Immigration and Naturalization Service, Room 2011, 425 Eye Street NW., Washington, DC 20536.

FOR FURTHER INFORMATION CONTACT:

For General Information: Loretta J. Shogren, Director, Policy Directives and Instructions, Immigration and Naturalization Service, 425 Eye Street NW., Washington, DC. 20536, Telephone: (202) 633-3048

For Specific Information: Flora T. Richardson, Immigration Examiner, Immigration and Naturalization Service, 425, Eye Street, NW., Washington, DC. 20536, Telephone: (202) 633-3946.

SUPPLEMENTARY INFORMATION: The legislative history (House Report 91-851, U.S. Code Cong. and Ad. News 2751-2755 (1970)) indicates that Congress amended the existing H-1 provision and established the L provision in 1970 to facilitate the entry into the United States of certain classes of nonimmigrant aliens needed by international businesses, universities and other organization. The H-1 category was modified to delete the requirement that the job which the alien is coming to fill be a temporary one. The petitioner may now temporarily employ an H-1 alien in a permanent or a temporary job. The L category was established to eliminate problems faced by the international companies having offices abroad in transferring key personnel freely within the organization. Prior to Pub. L. 91-225, international personnel coming to the United States for temporary assignment were forced to apply for immigrant visas, which in some cases were not available.

It is clear from the legislative history and the language of section 101(a)(15)(H)(i) and (L) that an alien admitted to the United States in these nonimmigrant categories is to be coming to the United States for a temporary period *with the intention to return abroad* voluntarily at the termination of his/her authorized stay if permanent status has not been accorded in the meantime. These proposed regulations set forth the procedures whereby the benefits under section 101(a)(15)(L) and section 101(a)(15)(H)(i) in part may be granted, denied, extended, revoked, or appealed.

Section 101(a)(15)(L) of the Immigration and Nationality Act was established to facilitate the temporary transfer of foreign nationals with management, executive, and specialized skills to the United States to continue employment with the same employer, its parent, or a branch, subsidiary or affiliate. Congress expected the number of persons in this category to be small and intended the Service to carefully regulate and monitor the eligibility of aliens for classification under section 101(a)(15)(L). The Service is concerned that current Service policy, on the one hand, restricts businesses and organizations in transferring and maintaining key personnel needed in the United States and, on the other hand, permits a number of organizations and alien beneficiaries to qualify under section 101(a)(15)(L) that were not contemplated by Congress when section 101(a)(15)(L) was enacted. The proposed revisions will address these concerns.

The Service has responsibility for determining whether the alien is eligible for classification under section 101(a)(15)(L) and whether the petitioner is a qualifying organization. Certain petitioners seeking the classification of aliens as intracompany transferees may file a blanket petition with the Service. Under the blanket petition procedure, the Service is responsible for determining whether the petitioner is a qualifying organization and has delegated to the Department of State responsibility for determining eligibility of the aliens for L classification except when the alien is in the United States.

To ease the burden on inspectors at U.S. ports of entry and to facilitate entry for Ls, a visa for Canadians who seek L classification under blanket petitions would be provided.

The H-1 and L regulations would be amended to define temporariness and to include the "dual intent" concept for both employer and alien. "Temporary" would be defined for H-1 or L purposes as up to three years, with a possibility of extensions up to two years, not to exceed five years. One further extension up to one year may be granted in extraordinary circumstances. The approval of a permanent labor certification or the filing of a preference petition would not in and of itself be ground for denial of an initial or extended H-1 or L nonimmigrant visa petition or an application for extension of stay, when certain conditions are met.

The substantive amendments proposed by this document are discussed below:

Discussion of Proposed Amendments

1. Definitions

A. Managerial and executive capacity—These definitions would be modified to require that virtually all of the employee's time must be spent in performing managerial or executive duties. This requires a demonstration that a beneficiary will be primarily or solely engaged in directing the management of an organization or a customarily recognized division of an organization and any other duties performed must be incidental to those as a manager or as an executive. The beneficiary's job title alone would be insufficient to establish that he or she meets this criterion. Factors such as the actual duties performed, the size of the organization, and number of employees would be evaluated to make the determination. While it is reasonable in organizations for a manager or executive to perform incidental duties related to providing a service or product of the organization, we believe that a substantial percentage of working time in such activities is an indicator that the position is other than managerial or executive.

B. Specialized knowledge—The definition would be revised to require that the knowledge be narrowly held in the organization, unique, and involve a key process or function which enhances the organization's operation and competitiveness in the market. The Service, in a number of precedent decisions, has discussed the various requirements for specialized knowledge (*Matter of Michelin Tire Corp.*, 17 I & N Dec. 248 (R.C. 1978); *Matter of Penner*, I.D. 2865 (Com. 1982); *Matter of Colley*, I.D. 2881 (Comm. 1981)). The term "specialized knowledge" refers to persons who, due to their outstanding level of expertise or knowledge in a field, are essential to a firm's ongoing operation because they have expert knowledge of the firm's product, research, service, or decision-making structure and process. The term does not apply to persons who have general knowledge and expertise in a field which enables them to produce a product or provide a service.

C. Specialized knowledge professional—This new term relates only to an alien who seeks "L" classification against a blanket petition and means an individual who possesses specialized knowledge and is a member of the professions, as defined in section 101(a)(32) of the Act.

D. Qualifying organization—The term "qualifying organization" would be added, to refer to the petitioner and any related organizations found to meet the requirements of section 101(a)(15)(L).

E. Other terms—Definitions for intracompany transferee, parent, subsidiary, and affiliate have been added, since these terms are used throughout the regulations. These definitions reflect the Service's interpretation and application of these terms.

2. Petitioner's Status

The petitioner for an intracompany transferee must be a firm, corporation, or other legal entity, or a parent, branch, subsidiary or affiliate thereof which is seeking to transfer an employee to the United States temporarily from one of its operations outside the United States. The legislative history of section 101(a)(15)(L) (House Report 91-851; U.S. Code Cong. & Ad. News 2751-2755 (1970)) clearly indicates that Congress intended this provision to be utilized by international organizations. It was not intended to accommodate complete relocation of foreign enterprises to the United States. The Board of Immigration Appeals and the Service have held that the statute does not require the continuing existence of a foreign-based legal entity since no precise structure or organization outside the United States is mandated by the statute. *Matter of Chartier*, 16 I & N Dec. 284 (BIA 1977), and *Matter of Thompson* ID 2889 (Com., August 1981). However, to conform to the intent of section 101(a)(15)(L), a person or organization must be able to demonstrate the ongoing international nature of the petitioner and the existence of foreign operations to which the employee can reasonably be expected to be transferred at the end of his/her assignment in the United States. To formalize this policy this proposed rule would require the petitioning employer to be an international firm, corporation, or legal entity doing business with employees in the United States and at least one other country. For an intracompany transferee to retain eligibility under section 101(a)(15)(L) of the Act, the petitioner must maintain its status as an international entity for the duration of the alien's stay in the United States.

When a petitioner seeks to transfer an alien to the United States to open or to be employed in a new office, the rule would require that the petitioner would be approved for a period not to exceed one year, after which the petitioner must demonstrate that it is actually doing business in the United States in order to extend the validity of the petition. This provision would reduce the incidence of sham operations and enhance the Service's ability to assure that beneficiaries of such petitions maintain their status in the United States.

3. Blanket Petition Program

The blanket petition program allows a petitioner to seek continuing approval of itself, its parent, and its branches, subsidiaries, and affiliates as qualifying organizations and, later, classification under section 101(a)(15)(L) of multiple numbers of aliens employed by itself, its parent, or some of its branches, subsidiaries and affiliates. Under the current blanket program, a number of employers have not taken advantage of this streamlined procedure because they believe that the threshold for qualifying is too limited; specialized knowledge is not covered; the documentation requirements are too onerous; and the period of petition approval is too short. The Service has considered employer concerns and Service operating experience under the blanket petition procedure and developed the following revisions as reflected in the proposed rule:

A. A petitioner would be able to file a blanket petition on behalf of itself, its parent and any number of its branches, subsidiaries, and affiliates as qualifying organizations if:

1. The petitioner, its parent, and those branches, subsidiaries, and affiliates are engaged in commercial trade or services;

2. The petitioner has an office in the United States that has been doing business for one year or more;

3. The petitioner has three or more domestic and foreign branches, subsidiaries, or affiliates; and

4. The petitioner and the other qualifying organizations have obtained

approval of petitions for at least 10 "L" managers, executives, or specialized knowledge professionals during the previous 12 months; or have U.S. subsidiaries or affiliates with combined annual sales of at least 25 million dollars; or have a United States workforce of at least 1000 employees.

B. Blanket petitions would be approved initially for three years and thereafter indefinitely if and so long as the qualifying organizations comply with the requirements of 8 CFR 214.2(1) and the terms of the petition.

C. The blanket procedure would be expanded to include persons who have specialized knowledge, but only if they are professionals as defined in section 101(a)(32) of the Act.

D. Requirements for proof of qualifying relationships would be simplified, and current requirements for documentation of the internal organizational structure and titles of positions would be eliminated.

E. A new form, specifically for L petitions, would be developed, in addition to a separate form (Certificate of Eligibility) to be used by petitioners to certify the eligibility of aliens against blanket petitions when they seek to transfer an alien to the United States.

The Service believes that the changes to the blanket petition program will increase the number of qualifying organizations and aliens who will utilize the blanket program. The requirements which a petitioner must meet to file a blanket petition have the effect of limiting participants in the program to medium to large organizations which provide goods or services for profit. Such organizations generally have clearly defined positions and organizational subdivisions. They regularly maintain systems, records, and other corporate documents such as annual reports, audits, and Securities and Exchange Commission filings in such a manner that their applications do not require the close scrutiny required for many others. It has been our experience that these organizations can readily document the relationship between entities, and their rotation of foreign personnel generally conforms to the requirements of section 101(a)(15)(L) and our regulations.

Under the blanket petition program, the Service is responsible for determining whether the petitioner and related entities are qualifying organizations. The Department of State or, in certain cases, the Service is responsible for determining the classification of aliens. This proposed rule would increase the responsibilities of consular officers for determining the eligibility of aliens seeking classification and visas based on blanket petitions. Consular officers would determine whether the position in which the alien will be employed in the United States is with an organization named in the approval notice and whether the specific job is managerial, executive, or requires a specialized knowledge professional. The consular officer would determine further whether the alien's immediate prior year of continuous employment abroad was with an organization named in the approval notice in a capacity that was managerial, executive or required a specialized knowlege professional, and whether the alien's prior training and experience qualifies him or her for the employment in the United States.

The inclusion of specialized knowledge along with managers and executives under the blanket petition program would increase the complexity of determinations which consular officers make under this program. A determination of specialized knowledge is frequently a difficult question requiring reference to case law and knowledge of the industry and the labor market in the United States. To limit this burden, only those professionals who possess specialized knowledge would be included under blanket petitions. The Service would continue to make determinations on individual petitions for all other applications under section 101(a)(15)(L).

This rule would also amend documentary requirements for nonimmigrants at 8 CFR 212.1(h) to require that an alien, including a Canadian national, seeking admission under section 101(a)(15)(L) of the Act as a beneficiary of a blanket petition must possess a nonimmigrant visa issued by an American consular officer classifying the alien under that section. Under the current blanket procedure, Canadian nationals and others who qualify for a visa waiver are considered for L classification at a United States port of entry. This determination will be more complex and time-consuming under the revised blanket program. Because of this, we believe that it is no longer feasible to have Service inspectors make the required determinations at a port of entry.

4. Temporariness and the Effect of Obtaining a Permanent Labor Certification or Filing a Preference Petition in the H-1 and L Classifications

It is clear from the legislative history and the language of section 101(a)(15)(H)(i) and (L) that aliens admitted to the United States in these nonimmigrant categories are to be coming to the United States for a temporary period *with the intention to return abroad.* When Congress established section 101(a)(15)(L) in 1970, its survey of international companies showed "a three-year admission would be sufficient [for an L]" but that "this should not be construed as a basis to deny bona fide requests for a renewal or extension, nor should the L visa holder be barred from due consideration of an application for adjustment of status if he should subsequently decide to seek permanent resident status in the United States". Congress was convinced that an international company would not jeopardize or endanger its future need for corporate executive rotation by attempting to misuse or abuse section 101(a)(15(L) as a vehicle for immigration.

Under the proposed regulation, the Service would define temporariness in the H-1 and L classification and specify that a petitioner may legitimately have the intent to use the services of an alien lawfully for a temporary period, and, in the future, to permanently employ the alien when and if the petitioner may lawfully do so; the alien may also legitimately have the intent to come to the United States temporarily and depart voluntarily at the end of his or her authorized stay unless, within that period, the alien has become a permanent resident of the United States. The temporary admission may not be sought, however, for the principal purpose of immigrating prematurely. The regulations clarify that the burden is on the petitioner/alien to establish the requisite intent.

Regarding "temporariness", we believe adoption of a generous but specific limit on what is regarded as temporary would best serve the interests of the Service and the affected public. The beneficiary of an H-1 or L petition would be admitted to the United States initially for a period up to three years. An extension of stay could be authorized for a period not to exceed two years. After five years, an extension of stay not to exceed one year could be granted under extraordinary circumstances after certification to the Administrative Appeals Unit. A new petition for the same alien would not be approved unless the alien departed voluntarily and resided outside the United States for one year.

The approval of a permanent labor certification or the filing of a preference petition for an alien would not by itself be ground to deny an H-1 or L petition or a request to extend an H-1 or L petition during the five (six)-year period, if the district director, in his judgment, determines that certain conditions are met. First, the dates of temporary employment must be within the

prescribed time limit. Second, the petitioner must establish that (a) the petitioner is not requesting the temporary classification for the principal purpose of enabling the employee to enter the United States permanently in advance of the availability of a visa number and (b), in the case of L classification, the petitioner will transfer the alien to an assignment abroad upon completion of the approved temporary employment, unless the alien has earlier been accorded permanent resident status or other authorization to work.

In deciding whether or not the foregoing conditions have been met, the district director would consider factors such as, but not limited to the following, as appropriate:

—Petitioner's prior history of use of aliens in temporary and permanent capacities and extent to which petitioner has employed aliens without lawful authorization
—Whether the employment appears to be an accommodation rather than a bona fide employer/employee relationship
—Whether the organization has an established program for rotation of international personnel
—Whether the employer or a subsidiary, parent or affiliate has operations and an appropriate position abroad to which the alien will be transferred at the end of his/her authorized stay
—When the employee is a major stockholder or the sole proprietor of the petitioner, whether the petitioner has a record of international entrepreneurship.

The burden would be on the petitioner to submit adequate proof. For H-1 and L classification, the difference in job duties for permanent services and temporary services would not be relevant to the question of intent.

Similarly, the approval of a labor certification or the filing of a preference petition would also not by itself be ground to deny an alien's application for admission, change of status, or extension of stay if the district director, in his judgment, determines that certain conditions are met. The alien must demonstrate, in the case of an H-1, that he/she has not abandoned residence abroad and, in the case of an H-1 or an L, that he/she intends to enter and remain in the United States only in accordance with any authorized stay and to return abroad voluntarily at or before termination of that authorization. In determining whether the alien meets these conditions, the district director would consider factors such as, but not limited to the following as appropriate:

—Evidence of a residence abroad such as home, bank accounts, or prospects of a job abroad at the end of the authorized stay
—Close family ties abroad
—History of previous stays in the United States and visa classifications; evidence that the alien has not entered or remained in the United States in violation of status or U.S. immigration laws
—Alien's employment history within and outside the United States
—Whether the employment appears to be an accommodation
—Whether the alien could reasonably be expected to continue his career outside the United States upon completion of his temporary employment.

The burden would be on the alien to submit adequate proof.

The Service believes that the proposed changes reflect Congressional intent as it relates to the H-1 and L nonimmigrant categories and that the public will benefit from the changes to the extent that they make these categories more useful to businesses and other organizations. They would also make clear Service policy regarding admission, the alien's temporary stay in the United States, and requirements for petitioners and beneficiaries who seek approval or classification under these nonimmigrant categories.

In accordance with 5 U.S.C. 605(b), the Commissioner of Immigration and Naturalization certifies that the rule will not, if promulgated, have a significant economic impact on a substantial number of small entities.

This rule will not be a major rule within the meaning of section 1(b) of E.O. 12291.

List of Subjects

8 CFR Part 212

Administrative practice and procedure, Aliens, Immigration, Passports and visas.

8 CFR Part 214

Administrative practice and procedure, Aliens, Authority delegation, Employment, Organization and functions, Passports and visas.

Accordingly, Chapter I of Title 8 Code of Federal Regulations would be amended as follows:

1. The authority citation for Part 212 continues to read as follows:

Authority: Secs. 101 and 212 of the Immigration and Nationality Act, as amended; 8 U.S.C. 1101 and 1182.

PART 212—DOCUMENTARY REQUIREMENTS NONIMMIGRANTS; WAIVERS; ADMISSION OF CERTAIN INADMISSIBLE ALIENS; PAROLE

2. Section 212.1 would be amended by adding a new paragraph (h) to read as follows:

§ 212.1 Documentary requirements for nonimmigrants.

* * * * *

(h) *Beneficiaries of blanket intracompany transferee petitions.* Notwithstanding any of the provisions of this part, an alien seeking admission under section 101(a)(15)(L) of the Act as a beneficiary of a blanket petition shall possess a nonimmigrant visa issued by an American consular officer classifying the alien under that section.

* * * * *

PART 214—NONIMMIGRANT CLASSES

1. The authority citation for Part 214 continues to read as follows:

Authority: Secs. 101 and 214 of the Immigration and Nationality Act, as amended (8 U.S.C. 1101 and 1184).

2. Section 214.2 would be amended by revising paragraph (h)(6)(i); renumbering paragraph (h)(6)(ii) as (h)(6)(v); adding new paragraphs (h)(6)(ii), (h)(6)(iii) and (h)(6)(iv); revising paragraph (h)(9); revising and renumbering paragraph (h)(10) as (h)(11); revising and renumbering paragraph (h)(12) as (h)(10); adding a new paragraph (h)(12); renumbering paragraph (h)(11) as (h)(13); renumbering paragraphs (h)(13) and (h)(14) as paragraphs (h)(14) and (h)(15), respectively; and revising (1).

§ 214.2 Special requirements for admission, extension, and maintenance of status.

* * * * *

(h) * * *

(6) *Approval of Petition*—(i) *General.* The district director shall consider all the evidence submitted and any other evidence as he may independently require to assist his adjudication. The district director shall notify the petitioner on Form I-171C of the approval of a petition filed on Form I-129B. Form I-171C shall include the beneficiary(ies), name(s), classification, and the petition's period of validity. A petition for more than one beneficiary may be approved in whole or in part. Form I-171C shall cover only those beneficiaries approved for classification under section 101(a)(15)(H).

(ii) *H-1 petition.* An approved petition for an alien classified under section 101(a)(15)(H)(i) of the Act is valid for the period of established need for the

beneficiary's temporary services, but not to exceed three years.

(iii) *H-2 petition.* If a certification by the Secretary of Labor or his designated representative is attached to a petition to accord an alien a classification under section 101(a)(15)(H)(ii) of the Act, the approval of the petition will not be valid beyond the date to which the certification is valid. When the certification does not state a validity period, approval of the petition will not exceed one year from the date on which the certification was issued.

(iv) *H-3 petition.* An approved petition for an alien classified under section 101(a)(15)(H)(iii) of the Act is valid for the documented length of the approved training program.

* * * *

(9) *Admission*—(i) *General.* A beneficiary may apply for admission to the United States only during the validity period of the petition. The authorized period of the beneficiary's admission shall not exceed the date of validity of the petition.

(ii) *H-1 limitation on admission.* An alien who has spent five or in some cases possibly six years in the United States under secton 101(a)(15)(H)(i) may not be readmitted to the United States under that visa classification unless the alien has resided outside the United States for the immediate prior year. In view of this restriction, a new petition shall not be approved for an alien who has spent five or six years in the United States under section 101(a)(15)(H)(i) unless the alien has resided outside the United States for the immediate prior year.

(10) *Extension of visa petition validity*—(i) *General.* A visa petition under section 101(a)(15)(H) may be extended by filing a new Form I-129B with the number of the previously approved petition. If there is no change in the previously approved visa petition, supporting documents are not required unless requested by the Service.

(ii) *H-1 petition.* An H-1 petition may be extended for a period of up to two years; however, the total period of approvals including the initial approval may not exceed five years except in extraordinary circumstances. An additional extension not to exceed one year may be granted beyond five years under extraordinary circumstances. Extraordinary circumstances shall exist when it is found that termination of the alien's services will impose extreme hardship on the petitioner's business operation or that the alien's services will be in the national welfare, safety, or security interests of the United States. No further extensions may be granted. If the district director decides that approval of the petition extension up to six years is warranted, the decision shall be certified to the Administrative Appeals Unit.

(iii) *H-2 and H-3 petitions.* A visa petition extension for H-2 or H-3 classification may be authorized in increments of not more than 12 months each under the same terms and conditions that applied to the original approval.

(11) *Extension of Stay*—(i) *General.* If maintaining status, the beneficiary may apply for an extension of stay to the validity period of the approved visa petition by submitting Form I-539. An application for an extension of stay on behalf of a group of beneficiaries covered by the same original petition must be filed on Form I-539 by each individual alien, but only one Form I-129B for extension of visa petition validity is required. In the case of an extension of stay for an alien ensemble performing as a group, only one Form I-539 is required with an attached list of beneficiaries. A change in the previously authorized employment or training requires the filing of a new petition by the prospective employer or trainer and the filing of an I-539 by the beneficiary. The Forms I-539 and I-129B may be filed concurrently. There is no appeal from the denial of an alien's request for an extension of stay filed on Form I-539.

(ii) *H-1 extension of stay.* An extension of stay may be authorized for a period of up to two years for a beneficiary of an H-1 petition. The alien's total period of stay may not exceed five years, except in extraordinary circumstances. An extension of stay not to exceed one year may be granted beyond five years under the extraordinary circumstances required in the subparagraph (10)(ii) for extension of an H-1 visa petition. No further extensions may be granted. If the district director decides that approval of the one-year extension is warranted because of extraordinary circumstances, the decision shall be certified to the Administrative Appeals Unit before service on the alien. No extension shall be granted to exceed the validity of the approved petition.

(iii) *H-2 extension of stay.* For an alien defined in section 101(a)(15)(H)(ii) of the Act, the application for extension of stay must be accompanied by a labor certification or a notice that the certification cannot be made, and the alien shall not be granted an extension which would result in an unbroken stay in the United States for more than three years. An application for an alien athlete or entertainer admitted under section 101(a)(15)(H)(ii) of the Act to perform services in the United States Virgin Islands cannot be approved for extension of stay beyond a total of 45 days.

(iv) *H-3 extension of stay.* An extension may be authorized in increments of not more than 12 months each under the same terms and conditions that apply to admission.

(12) *Effect of approval of a permanent labor certification or filing of a preference petition on H-1 classification*—(i) *Petitioner.* The approval of a permanent labor certification or the filing of a preference petition for an alien is not by itself ground to deny an H-1 petition or a request to extend an H-1 petition if the district director, in his judgment, determines that certain conditions are met.

(A) The dates of employment must be within the time limit for which an H-1 petition may be authorized or extended, and

(B) The petitioner must establish that temporary classification is not being requested for the principal purpose of enabling the employee to enter the United States permanently in advance of the availability of a visa number.

(ii) *Beneficiary.* The approval of a labor certification or the filing of a preference petition is not by itself ground to deny an alien's application for admission, change of status, or extension of stay if the district director, in his judgment, determines that certain conditions are met.

(A) The alien must demonstrate that he/she has not abandoned residence abroad, and

(B) The alien must establish that he or she intends to enter and remain in the United States only in accordance with any authorized stay and to return abroad voluntarily at or before termination of that authorization.

* * * * *

(l) *Intracompany transferees*—(1) *Admission of intracompany transferees*—(i) *General.* Under section 101(a)(15)(L) of the Act, an alien employee of a qualifying organization may be admitted temporarily to the United States to continue employment with his/her same employer or a parent, branch, affiliate or subsidiary of that employer in a managerial, executive, or specialized knowledge capacity. An alien transferred to the United States under this nonimmigrant classification is referred to as an intracompany transferee, and the organization which seeks the classification of an alien as an intracompany transferee is referred to as the petitioner. The Service has responsiblity for determining whether

the alien is eligible for admission and whether the petitioner is a qualifying organization. These regulations set forth the procedures whereby these benefits may be applied for and granted, denied, extended or revoked. They also set forth procedures for appeal of adverse decisions and admission of intracompany transferees. Certain petitioners seeking the classification of aliens as intracompany transferees may file a blanket petition with the Service. Under the blanket petition process, the Service is responsible for determining whether the petitioner and its parent, branches, subsidiaries, and affiliates specified are qualifying organizations. The Department of State, or, in certain cases, the Service is responsible for determining the classification of the alien.

(ii) *Definitions.*

(A) "Intracompany transferee" means an alien who, immediately preceding the time of his/her application for admission into the United States, has been employed abroad continuously for the immediate prior year by a firm or corporation or other legal entity or parent, branch, affiliate or subsidiary thereof and who seeks to enter the United States temporarily in order to continue to render his/her services to the same employer or a parent, branch, subsidiary or affiliate thereof in a capacity that is managerial, executive, or involves specialized knowledge. Periods spent in the United States in lawful status for the same employer or a parent, branch, subsidiary or affiliate thereof shall not be interruptive of the one year of continuous employment abroad, but such periods shall not be counted toward fulfillment of that requirement.

(B) "Managerial capacity" means an assignment within an organization in which the employee for virtually all of his/her time directs the organization or a department or subdivision of the organization, supervises and controls the work of supervisory, managerial or professional employees, has the authority to hire and fire or recommend those as well as other personnal actions (such as promotion and leave authorization), and exercises discretionary authority over day-to-day operations. Other duties performed must be incidental to those as a manager. The term manager does not include a first-line supervisor, unless the employees supervised are managerial or professional.

(C) "Executive capacity" means an assignment within an organization in which the employee for virtually all of his/her time directs the management of an organization or a major component of that organization and establishes organizational goals and policies, exercise wide latitude in discretionary decision-making, receives only general supervision or direction from higher level executives, the board of directors, or stockholders of the business, and supervises and controls the work of others acting in executive or managerial capacities. Other duties performed must be incidental to those as an executive.

(D) "Specialized knowledge" means knowledge possessed by an individual in an organization which is narrowly held within the organization and relates directly to the product or service of an organization or to the equipment, techniques, management, or other proprietary interests of the employer. The knowledge must be unique and involve a key process or function which enhances the organization's operation, expansion, and competitiveness in the market place.

(E) "Specialized knowledge professional" means an individual who has specialized knowledge and is a member of the professions as defined in section 101(a)(32) of the Immigration and Nationality Act.

(F) "New office" means an office that has been in operation for less than one year.

(G) "Qualifying organization" means a United States or foreign firm, corporation or other legal entity which, for the duration of the alien's stay in the United States as an intracompany transferee, directly or through a parent, branch, affiliate, or subsidiary is or will be doing business in the United States and in at least one other country and which otherwise meets the requirements of section 101(a)(15)(L). A qualifying organization is not required to engage in international trade.

(H) "Doing business" means the regular, systematic and continuous provision of goods and/or services by a qualifying organization and shall not include the mere presence of an agent or office of the qualifying organization in the United States or abroad.

(I) "Parent" means a firm, corporation, or other legal entity which has subsidiaries and is not controlled by any other firm, corporation, or other legal entity.

(J) "Branch means an operating division of the same organization housed in a different location.

(K) "Subsidiary" means a firm, corporation, or other legal entity of which a parent owns more than half of its stock and has managerial control of the entity; or owns 50 per cent of the stock of a 50–50 equity joint venture and has equal managerial control and veto power; or owns less than half its stock and controls the management of the entity because of extremely diverse holdings of minor stockholders or because it has proxy votes which give it a majority.

(L) "Affiliate" means one of two legal entities both of which are controlled by the same individual or legal entity.

(2) *Filing of petitions*—(i) Except as provided in paragraph (ii) below, a petitioner seeking to classify an alien as an intracompany transferee shall file a petition in duplicate on Form I–129L with the district director having jurisdiction over the area where the alien will be employed.

(ii) A petitioner which meets the requirements of subparagraph (4) and seeks continuing approval of itself and its parent, branches, specified subsidiaries and affiliates as qualifying organizations and, later, classification under section 101(a)(15)(L) of multiple numbers of aliens employed by itself, its parent, or those branches, subsidiaries or affiliates may file a blanket petition on Form I–1229L with the district director having jurisdiction over the area where the petitioner has its principal office in the United States.

(3) *Evidence for individual petitions.* As individual petition filed on Form I–129L shall be accompanied by:

(i) Evidence that the petitioner and the organization which employed or will employ the alien are qualifying organizations as defined in subparagraph (1)(ii)(G).

(ii) Evidence that the alien will be employed in an executive, managerial, or specialized knowledge capacity, incuding a detailed description of the services to be performed.

(iii) Evidence that the alien has at least one continuous year of full-time employment abroad with a qualifying organization immediately preceding the filing of the petition.

(iv) Evidence that the alien's prior year of employment was in a position that was managerial, executive, or involved specialized knowledge and that the alien's prior employment qualifies him/her to perform the intended services in the United States; however, the work in the United States need not be the same work which the alien performed abroad.

(v) It the petition indicates that the beneficiary is coming to open or to be employed in a new office in the United States, evidence that sufficient physical premises to house the new office have been secured by purchase, lease, or rental and that the petitioner has sufficient resources to remunerate the beneficiary.

(vi) If the beneficiary is an owner or major stockholder of the company the petition must be accompanied by evidence that the beneficiary's services are to be used for a temporary period and evidence that the beneficiary will be transferred to an assignment abroad upon the completion of the temporary services in the United States.

(vii) Such other evidence as the district director, in his or her discretion, may deem necessary.

(4) *Blanket Petitions*—(i) A petitioner which meets the following requirements may file a blanket petition seeking continuing approval of itself and its parent, branches, subsidiaries, and affiliates as qualifying organizations if:

(A) The petitioner and its parent, branches, subsidiaries, and affiliates are engaged in commercial trade or services; and

(B) The petitioner has an office in the United States that has been doing business for one year or more; and

(C) The petitioner has three or more domestic and foreign branches, subsidiaries, or affiliates; and

(D) The petitioner and the other qualifying organizations have obtained approval of petitions for at least 10 "L" managers, executives, or specialized knowledge professionals during the previous 12 months; or have U.S. subsidiaries or affiliates with combined annual sales of at least 25 million dollars; or have a United States workforce of at least 1000 employees.

(ii) Managers, executives, and specialized knowledge professionals employed by firms, corporations or other entities which have found to be qualifying organizations pursuant to an approved blanket petition may be classified as intracompany transferees and admitted to the United States as provided in subparagraphs (5) and (11).

(iii) An individual petition may be filed by the petitioner or any of its related entities only when the intended beneficiary is ineligible for "L" classification under the blanket petition procedure. In all other cases, when applying for or after obtaining approval of a blanket petition, the petitioner shall include (or amend to include) in the blanket petition all of its branches, subsidiaries, and affiliates which plan to seek to transfer aliens to the United States under section 101(a)(15)(L).

(iv) *Evidence.* A blanket petition filed on Form I-129L shall be accompanied by:

(A) Evidence that the petitioner meets the requirements of subparagraph (4)(i).

(B) Evidence that all entities for which approval is sought are qualifying organizations as defined in subparagraph (1)(ii)(G).

(C) Such other evidence as the district director, in his or her discretion, deems necessary in a particular case.

(5) *Certification and admission procedures for beneficiaries under blanket petition.*

(i) *Jurisdiction.* United States consular officers shall have authority to determine eligibility of individual beneficiaries outside the United States seeking L classification under blanket petitions, including Canadian nationals. An alien's change of status application in the United States from another nonimmigrant classification to L classification under a blanket petition shall be filed with the district office at which the blanket petition was filed.

(ii) *Procedures*—(A) When one qualifying organization listed in an approved blanket petition wishes to transfer an alien outside the United States to a qualifying organization in the United States, the petitioner listed in the blanket petition shall complete Form I-129S, Certificate of Eligibility for Intracompany Transferee under a Blanket Petition, in an original and three copies. The petitioner shall retain one copy for its records and send the original and two copies to the alien. A copy of the approved Form I-171C must be attached to the original and each copy of Form I-129S.

(B) After receipt of Form I-171C and Form I-129S, a qualified employee who is being transferred to the United States may use these documents to apply for visa issuance with the consular officer within six months of the date on Form I-129S.

(C) When the alien is in the United States and is seeking a change of status from another nonimmigrant classification to L classification under a blanket petition, the petitioner shall submit Form I-129S, a copy of the approved Form I-171C and Form I-506 (Application for Change of Nonimmigrant Status) completed by the alien beneficiary at the district office with which the blanket petition was filed.

(D) The consular or Service officer shall determine whether the position in which the alien will be employed in the United States is with an organization named in the approved petition and whether the specific job is for a manager, executive, or specialized knowledge professional. The consular or Service officer shall determine further whether the alien's immediate prior year of continuous employment abroad was with an organization named in the petition and was in a position as manager, executive or specialized knowledge professional and whether the alien's prior employment qualifies him or her to perform the intended services in the United States.

(E) Consular officers may grant "L" classification only in clearly approvable applications. If the consular officer determines that the alien is eligible for L classification to assume the intended employment in the United States, the consular officer may issue a nonimmigant visa, noting the visa classification "Blanket L-1" for the principal alien and "Blanket L-2" for any accompanying or following to join spouse and children. The consular officer shall also endorse all copies of the alien's Form I-129S with the blanket L-1 visa classification and return the original and one copy to the alien. When the alien is inspected for entry into the United States, both copies of the Form I-129S shall be stamped to show a validity period not to exceed three years and the second copy collected for control purposes. Service officers who determine eligibility of aliens for L-1 classification under blanket petitions shall endorse both copies of Form I-129S with the blanket L-1 classification and the validity period not to exceed three years and retain the second copy for Service records.

(F) If the consular officer determines that the alien is ineligible for L classification under a blanket petition, the consular officer's decision shall be final. The consular officer shall record the reasons for the denial on form I-129S, retain one copy, return the original of I-129S to the Service office which approved the blanket petition, and provide a copy to the alien. In such a case, an individual petition may be filed for the alien with the district director having jurisdiction over the area of intended employment; the petition shall state the reason the alien was denied L classification and specify the consular office which made the determination and the date of the determination.

(G) An alien admitted under an approved blanket petition may be reassigned to any organization listed in the approved petition in the same position without referral to the Service during his/her authorized stay. If the alien will be assigned to a new position, the petitioner shall complete a new Certificate of Eligibility and send it to the district director who approved the blanket petition for approval.

(6) *Certification of documents by attorneys.* A copy of a document submitted in support of a visa petition filed pursuant to section 214(c) of the Act and section 214.2(1) of this part may be accepted, without the original, if the copy bears a certification by an attorney in accordance with section 204.2(j) of

this chapter. However, the original document shall be submitted if requested by the Service.

(7) *Approval of petition*—(i) *General.* The district director shall notify the petitioner on Form I-171C of the approval of an individual or a blanket petition filed on Form I-129L. The original Form I-171C received from the Service with respect to an approval individual or blanket petition may be duplicated by the petitioner for the beneficiary's use as described in subparagraph (h)(13) below.

(A) *Individual petition—(1)* Form I-171C shall include the beneficiary's name and classification and the petition's period of validity.

(*2*) An individual petition approved under this paragraph shall be valid for the period of established need for the beneficiary's temporary services, not to exceed three years, except where the beneficiary is coming to the United States to open or be employed in a new office.

(*3*) If the beneficiary is coming to the United States to open or to be employed in a new office, the petition may be approved for a period not to exceed one year, after which the petitioner shall demonstrate that it is doing business as defined in subparagraph (1)(ii)(4) to extend the validity of the petition.

(B) *Blanket petition—(1)* Form I-171C shall identify the approval organizations included in the petition and the petition's period of validity.

(*2*) A blanket petition approved under this paragraph shall be valid initially for a period of three years and may be extended indefinitely thereafter if the qualifying organizations have complied with these regulations.

(*3*) A blanket petition may be approved in whole or in part and shall cover only qualifying organizations.

(*4*) From the date of approval of an indefinite blanket petition, the petitioner shall at the end of each three-year period provide the Service office at which the blanket petition was filed with a list of the aliens admitted under the blanket petition during the preceding three-year period, including all positions held by each during that period, the employing entity, and the dates of initial admission and final departure of each alien. Failure to provide reports may result in revocation of the petition

(C) *Amendments.* The petitioner shall file an amended petition with the district office where the original petition was filed to reflect changes in approved relationships, additional qualifying organizations, and any information which would affect the beneficiary's employment under section 101(a)(15)(L) of the Act.

(ii) *Spouse and dependents.* The spouse and unmarried minor children of the beneficiary are entitled to the same nonimmigrant classification and length of stay as the beneficiary, if accompanying or following to join the beneficiary in the United States. Neither the spouse nor any child may accept employment unless he or she is otherwise authorized to be employed pursuant to the Act.

(8) *Denial of petition*—(i) *Individual petition.* If an individual petition is denied, the petitioner shall be notified on Form I-292 of the denial, the reasons, for the denial, and the right to appeal the denial.

(ii) *Blanket petition.* If a blanket petition is denied in whole or in part, the petitioner shall be notified on Form I-292 of the decision, the reasons for the denial, and the right to appeal the denial. When the petition is denied in part, the Service office issuing the denial shall forward to the petitioner, along with the denial, a Form I-171C listing those organizations which were found to qualify. If the decision is reversed on appeal, a new Form I-171C shall be sent to the petitioner to reflect the changes made as a result of the appeal.

(9) *Revocation of approval of individual and blanket petitions*—(i) *General.* The petitioner shall notify the Service of any changes in the relationship between approved entities and any changes in the employment of a beneficiary which would affect eligibility under section 101(a)(15)(L) and these regulations within 10 days of the change.

(ii) *Automatic revocation.* The approval of any individual or blanket petition is automatically revoked if the petitioner and the qualifying organizations cease to meet the requirements for filing the individual or blanket petition respectively, or the petitioner decides to withdraw the petition. The petitioner shall notify the Service in writing within 10 days if any of these events occur.

(iii) *Revocation on Notice*—(A) The district director shall send to the petitioner a notice of intent to revoke the petition in relevant part if he/she finds:

(*1*) That one or more entities are no longer qualifying organizations; or

(*2*) That the alien is no longer eligible under section 101(a)(15)(L) of the Act; or

(*3*) That the petitioner failed to file reports on intracompany transferee admissions and departures as required by subparagraph (7) of this paragraph; or

(*4*) That qualifying organizations violated requirements of section 101(a)(15)(L) and these regulations; or

(*5*) That the statement of facts contained in the petition was not true and correct; or

(*6*) That approval of the petition was improvidently granted.

(B) The notice of intent to revoke shall contain a detailed statement of the grounds for the revocation and the time period allowed for the petitioner's rebuttal. Upon receipt of this notice, the petitioner may submit evidence in rebuttal within 15 days of the notice. The district director shall consider all relevant evidence presented in deciding whether to revoke the petition in whole or in part. If the petition is revoked in part, the remainder of the petition shall remain approved and a revised Form I-171C shall be sent to the petitioner with the revocation notice.

(10) *Appeal of denial or revocation of individual or blanket petition*—(i) A petition denied in whole or in part may be appealed under Part 103 of this chapter.

(ii) A petition that has been revoked on notice in whole or in part may be appealed under Part 103 of this chapter. Automatic revocations may not be appealed.

(11) *Admission.* A beneficiary may apply for admission to the United States only while the individual or blanket petition is valid. The beneficiary of an individual petition shall not be admitted for a date past the validity period of the petition. The beneficiary of a blanket petition may be admitted for three years even though the initial validity period of the blanket petition may expire before the end of the three-year period. The admission period for any alien under section 101(a)(15)(L) shall not exceed three years unless an extension of stay is granted pursuant to subparagraph (15) of this paragraph.

(12) *L-1 limitation on admission.* An alien who has spent five or in some cases six years in the United States under section 101(a)(15)(L) may not be readmitted to the United States under that visa classification unless the alien has resided outside the United States for the immediate prior year. In view of this restriction, a new individual petition may not be approved for an alien who has spent five or six years in the United States under section 101(a)(15)(L) unless the alien worked outside the United States for the immediate prior year. A consular or Service officer may not grant L classification under a blanket petition to an alien who has spent five or six years in the United States unless the alien has worked outside the United States for the immediate prior year.

(13) *Beneficiary's use of Form I-171C and Form I-129S*—(i) *Beneficiary of an*

individual petition. The beneficiary of an individual petition who does not require a nonimmigrant visa may present a copy of Form I-171C at a port of entry to facilitate entry into the United States. The copy of Form I-171C shall be retained by the beneficiary and presented for entry during the validity of the petition provided that the beneficiary is entering or reentering the United States to resume the same employment with the same petitioner within the validity period of the petition and to apply for an extension to stay. A beneficiary who is required to present a visa for admission and whose visa will have expired before the date of his or her intended return may use an original Form I-171C to apply for a new or revalidated visa during the validity period of the petition and to apply for an extension of stay.

(ii) *Beneficiary of a blanket petition.* Each alien seeking L classification under a blanket petition shall present a copy of Form I-171C and a Form I-129S from the petitioner which identifies the position and organization from which the employee is transferring, the new organization and position to which the employee is destined, a description of the employee's actual duties for both the new and former positions, and the positions, dates, and locations of previous L stays in the United States. A current copy of Form I-171C and Form I-129S should be retained by the beneficiary and used for leaving and reentering the United States to resume employment with a qualifying organization during his/her authorized period of stay, for applying for an extension of stay, for applying for a new or revalidated visa, or for applying for readmission at a port of entry. The alien may be readmitted even though reassigned to a different organization named on the Form I-171C than the one shown on Form I-129S if the position is the same.

(14) *Extension of visa petition validity*—(i) *Individual petition.* An individual petition under section 101(a)(15)(L) shall be automatically extended without the filing of Form I-129L, if the district director extends the stay of the alien beneficary in accordance with subparagraph (1)(15) below. A new form I-171C shall be issued to the petitioner at the same time that the beneficiary is notified that his or her extension of stay application has been approved. The dates of extension shall be the same for the petition and the beneficiary's extension of stay.

(ii) *Blanket petitions.* A blanket petition may be extended indefinitely by filing a new Form I-129L with a copy of the previous approval notice and a report of admissions during the preceding three years. The report of admissions shall include a list of the aliens admitted under the blanket petition during the preceding three years, including position held during that period, the employing entity, and the dates of initial admission and final departure of each alien.

(15) *Extension of stay*—(i) *General.* An extension of stay may be authorized for a period of up to two years for beneficiaries of individual and blanket petitions. The total period of stay may not exceed five years except in extraordinary circumstances. An extension of stay not to exceed one year may be granted beyond five years in extraordinary circumstances. Extraordinary circumstances shall exist when it is found that termination of the alien's services will impose extreme hardship on the petitioner's business operation or that the alien's services will be in the national welfare, safety, and security interests of the United States. No further extensions may be granted. If the district director decides that approval of a one-year extension is warranted because of extraordinary circumstances, the decision shall be certified to the Administrative Appeals Unit before service on the alien. The spouse and minor children of an L-1 beneficiary may be included in the extension application and given extensions of stay to the same date as the beneficiary.

(ii) *Beneficiary of individual petition.* A beneficiary of an individual petition may apply for an extension of stay by submitting Form I-539, a copy of the original I-171C, and a letter from the petitioner which certifies that the terms and conditions of the original petition have not changed and specifies the new dates of employment requested.

(iii) *Beneficiary of blanket petition.* A beneficiary of a blanket petition may apply for an extension of stay by submitting Form I-539, his or her copy of Form I-171C and I-129S, and a letter from the petitioner which certifies that the terms and conditions of the petition and the alien's employment have not changed and specifies the new dates of employment requested.

(iv) A new Form I-171C or a revalidated Form I-129S as appropriate shall be sent to the applicant if the extension is approved. Form I-541 shall be sent if the extension is denied. There is no appeal from the denial of an extension of stay.

(16) *Effect of approval of a permanent labor certification or filing a preference petition on L-1 classification*—(i) *Petitioner.* The approval of a permanent labor certification or the filing of a preference petition for an alien is not by itself ground to deny an L petition or a request to extend an L petition if the district director, in his judgment, determines that certain conditions are met.

(A) The dates of temporary employment must be within the time limit for which a petition may be authorized or extended;

(B) The petitioner must establish that temporary classification is not being requested for the principal purpose of enabling the employee to enter the United States permanently in advance of the availability of a visa number; and

(C) The petitioner must establish that it will transfer the beneficiary to an assignment abroad upon completion of the approved temporary employment unless the alien has been accorded permanent resident status or other authorization to work.

(ii) *Beneficiary.* The approval of a labor certification or the filing of a preference petition is not by itself ground to deny an alien's application for admission, change of status, or extension of stay if the district director, in his judgment, determines that the alien has demonstrated that he/she intends to enter and remain in the United States only in accordance with any authorized stay and to return abroad voluntarily at or before termination of that authorization.

* * * * * *

Dated: May 5, 1986.

Alan C. Nelson,

Commissioner, Immigration and Naturalization Service.

[FR Doc. 86-11440 Filed 5-20-86; 8:45 am]

BILLING CODE 4410-10-M

DEPARTMENT OF TRANSPORTATION

Federal Aviation Administration

14 CFR Ch. I

[Summary Notice No. PR-86-7]

Petitions for Rulemaking; Summary of Petitions Received and Dispositions of Petitions Denied or Withdrawn

AGENCY: Federal Aviation Administration (FAA), DOT.

ACTION: Notice of petitions for rulemaking and of dispositions of petitions denied or withdrawn.

SUMMARY: Pursuant to FAA's rulemaking provisions governing the application, processing, and disposition of petitions for rulemaking (14 CFR Part

11), this notice contains a summary of certain petitions requesting the initiation of rulemaking procedures for the amendment of specified provisions of the Federal Aviation Regulations and of denials or withdrawals of certain petitions previously received. The purpose of this notice is to improve the public's awareness of this aspect of FAA's regulatory activities. Neither publication of this notice nor the inclusion or omission of information in the summary is intended to affect the legal status of any petition or its final disposition.

DATE: Comments on petitions received must identify the petition docket number involved and be received on or before, July 21, 1986.

ADDRESS: Send comments on the petition in triplicate to: Federal Aviation Administration, Office of the Chief Counsel, Attn: Rules Docket (AGC-204), Petition Docket No. —, 800 Independence Avenue, SW., Washington, DC 20591.

FOR FURTHER INFORMATION: The petition, any comments received, and a copy of any final disposition are filed in the assigned regulatory docket and are available for examination in the Rules Docket (AGC-204), Room 916, FAA Headquarters Building (FOB-10A), Federal Aviation Administration, 800 Independence Avenue, SW., Washington, DC 20591; telephone (202) 426-3644.

This notice is published pursuant to paragraphs (b) and (f) of § 11.27 of Part 11 of the Federal Aviation Regulations (14 CFR Part 11).

Issued in Washington, DC, on May 15, 1986.

John H. Cassady,

Assistant Chief Counsel, Regulations and Enforcement Division.

PETITIONS FOR RULEMAKING

Docket No.	Petitioner	Description of the petition
24927	Aircraft Owners and Pilots Association	*Description of Petition:* To amend the effective date of amendment 91-192 on MEL's from March 13, 1986, to July 1, 1986. To permit aircraft owners adequate time to become aware of the termination of suspension, to evaluate the need for an MEL, and if necessary apply for approval prior to the rule's effective date and enforcement. *Regulations Affected:* 14 CFR 91.30. *Petitioner's Reason for Rule:* In terminating the suspension of § 91.30 for MELs, the FAA provided 90 days from the FEDERAL REGISTER notice to the effective date of March 13, 1986. For a rule which has been in suspension since 1979, the FAA should have provided at least six months, until July 1, 1986, between notice and effect. Additionally, the comment period on the termination of suspension was approximately 60 days. These time periods do not permit wide dissemination of information to the pilot community and certainly do not provide adequate time for public comment. This FAA action gives the appearance of closed-mindedness and a disregard for the quality of public comment.
24824	Air Transport Association	*Description of Petition:* Amendment to Flight Time Limitations to allow accommodation of operational delays that occur in routine operations. The petitioner request reconsideration of the "Rest Must Begin" provision and recommends substituting the phrase "Must be Scheduled To Begin" no later than 24 hours after the commencement of the reduced rest period but must begin not later than 24 hours to resolve the matter. *Regulations Affected:* 14 CFR 121.471(c) (1), (2), (3) and 135.265(c) (1), (2), and (3). *Petitioner's Reason for Rule:* Petitioner states that the amendment would avoid introduction of a subtle risk factor that has played a role in a major aviation acident. The proposed amendment would also avoid unnecessary disruption of airline schedules without reducing rest provided for flight crewmembers.
24955	Fairchild Corporation	*Description of Petition:* Amendment to the oxygen requirements to allow supplemental oxygen quantities based on the projected need, with a minimum quantity of 45-minutes for each pilot on pressurized aircraft. *Regulations Affected* 14 CFR 135.157. *Petitioner's Reason for Rule:* The amendment would relieve operators of the current economic burden of either carrying excessive oxygen quantities or of flying at inefficient altitudes.
24932	Aircraft Owners Pilots Association	*Description of Petition:* To extend the duration of a third-class airman medical certificate to 36 calendar months for non-commercial operations requiring a private or student pilot certificate. *Regulations Affected:* 14 CFR 61.23(c). *Petitioner's Reason for Rule:* Granting the amendment would reduce a regulatory and economic burden on the public and reduce the administrative cost and paperwork burden on the FAA, while mantaining current safety assurance.
24869	Beech Aircraft Corp	*Description of Petiton:* To amend Part 45 of the Federal Aviation Regulation (FAR) to define the location of Nationality and Registration Marks on fixed-wing aircraft ina way that is not affected by aircraft configuration. *Regulations Affected:* 14 CFR 45.25. *Petitioner's Reason for Rule:* This proposal is prompted by airplane configurations that depart from the usual arrangement of having horizontal stabilizers on the aft end of the fuselage. Existing rules do not cover configurations with horizontal stabilizers located on the foreward end of the fuselage or with engine nacelles mounted structurally to wings that blank out the normal fuselage location for marks. The changes to Part 45 proposed would eliminate the need for petitioning for exemption to the rule as currently written.
24969	National Rifle Assoc	*Description of Petition:* Amendment to the regulations to prohibit certificate holders from placing upon, or in any way attach to, the outside of checked baggage or any other checked parcel any markings of any kind which would indicate that the baggage or parcel contained a firearm. *Regulations Affected:* 14 CFR 108.11. *Petitioner's Reason for Rule:* Plainly, such a change is in the public interest since it will minimize the possibility of theft of baggage containing firearms of the theft of firearms themselves by eliminating what is tantamount to an invitation to steal. Notably, a day-glow orange tag on checked serves no beneficial purpose since its only purported purpose is as a form of declaration that the firearm being checked as baggage is unloaded, that the luggage containing the declared firearm is locked, and that the key to the luggage is in the possession of the passenger. Certainly, such a declaration could be made on a form which the passenger retained with his ticket. This proposed addition will also benefit airlines since it will minimize the changs of the airline being sued for loss of a passenger's luggage or firearms.

[FR Doc. 86-11362 Filed 5-20-86; 8:45 am]
BILLING CODE 4910-13-M

14 CFR Part 39

[Docket No. 86-CE-6-AD]

Airworthiness Directives; Beech 90 Series and 100 Series Airplanes

AGENCY: Federal Aviation Administration (FAA), DOT.

ACTION: Notice of proposed rulemaking (NPRM).

SUMMARY: This Notice proposes to adopt a new Airworthiness Directive (AD), applicable to certain Beech Models 65-90, 65-A90, 65-A90-1, 65-A90-2, 65-A90-3, 65-A90-4, B90, C90, C90A, E90, 100, A100, and B100 airplanes. Fatigue cracks have been found in the wing main spar lower cap. This AD would require inspection of the wing main spar and associated structure to prevent possible failure from undetected fatigue cracking.

DATE: Comments must be received on or before June 27, 1986.

ADDRESSES: Beech Structural Inspection and Repair Manual, P/N 98-39006, was mailed by the manufacturer to all owners of record in 1983. Additional

copies can be obtained from Beech Aircraft Corporation, Wichita, Kansas. 67201. A copy is also contained in the Rules Docket at the address below. Send comments on the proposal in duplicate to Federal Aviation Administration, Central Region, Office of the Regional Counsel, Attention: Rules Docket No 86-CE-6-AD, Room 1558, 601 East 12th Street, Kansas City, Missouri 64106. Comments may be inspected at this location between 8 a.m. and 4 p.m., Monday through Friday, holidays excepted.

FOR FURTHER INFORMATION CONTACT: Mr. Don Campbell, Aerospace Engineer, Airframe Branch, ACE-120W, Wichita Aircraft Certification Office (ACO), 1801 Airport Road, Room 100, Wichita, Kansas 67209; Telephone (316) 946-4409.

SUPPLEMENTARY INFORMATION:

Comments Invited

Interested persons are invited to participate in the making of the proposed rule by submitting such written data, views or arguments as they may desire. Communications should idenfity the regulatory docket or notice number and be submitted in duplicate to the address specified above. All communications received on or before the closing date for comments specified above will be considered by the Director before taking action on the proposed rule. The proposals contained in this notice may be changed in the light of comments received. Comments are specifically invited on the overall regulatory, economic, environmental and energy aspects of the proposed rule. All comments submitted will be available both before and after the closing date for comments in the Rules Docket for examination by interested persons. A report summarizing each FAA public contact concerned with the substance of this proposal will be filed in the Rules Docket.

Availability of NPRMS

Any person may obtain a copy of this Notice of Proposed Rulemaking (NPRM) by submitting a request to the Federal Aviation Administration, Central Region, Office of the Regional Counsel, Attention: Rule Docket No. 86-CE-6-AD, Room 1558, 601 East 12th Street, Kansas City, Missouri 64106.

Discussion

Airworthiness Directive (AD) 70-25-04 requires inspection for fatigue cracks in the wing main spar lower cap of Beech Model 65-90 airplanes with Serial Nos. below LJ-68. Subsequent to issuance of this AD, approximately 1,569 additional Beech 90 and 100 Series airplanes have been manufactured with basically the same wing spar structure. These airplanes are operated in a broad spectrum of applications and structural susceptibility to possible fatigue cracking depends on operating use, flight hours and environmental factors. As a result, Beech issued Structural Inspection and Repair Manual, P/N 98-39006, dated December 1, 1982, which prescribes inspection procedures for spar caps and attach fittings for all Beech 90 and 100 series airplanes. The inspection schedules and requirements may vary from one model or series to another, but virtually the entire fleet is affected by the manual. Voluntary inspections per the Beech manual have revealed cracks in the main spar lower caps of three Model C90, an E90 and two Model 100 airplanes. Because of their location, the FAA considers these six to be fatigue cracks which would have grown in size, possibly causing failure of the spar, if not detected and repaired. Since the condition is likely to exist or develop in other Beech 90 and 100 series aircraft of the same design, an AD is being proposed which would require inspection, and when necessary the replacement, of the wing main spar structure in accordance with the Beech Structural Inspection and Repair Manual, P/N 98-39006. There are approximately 1,569 airplanes affected by the proposed AD. The cost of inspecting these airplanes per the proposed AD is estimated to be $1,500 per airplane. The total cost is estimated to be $2,353,500 to the private sector. The cost per airplane is less than the significant cost amount for those small entities operating one airplane. The FAA has determined, on the basis of the aircraft registration records, that less than 1% of the owners of the affected airplanes own more than one of the affected airplanes, which is less than the threshold for a substantial number of small entities.

Therefore, I certify that this action (1) is not a major rule under the provisions of Executive Order 12291, (2) is not a significant rule under DOT Regulatory Policies and Procedures (44 FR 11034; February 26, 1979) and (3) if promulgated, will not have a significant economic impact on a substantial number of entities under the criteria of the Regulatory Flexibility Act. A copy of the draft regulatory evaluation has been prepared for this action and has been placed in the public docket. A copy of it may be obtained by contacting the Rules Docket at the location provided under the caption **"ADDRESSES"**.

List of Subjects in 14 CFR Part 39

Air Transportation, Aviation safety, Aircraft, safety.

The Proposed Amendment

Accordingly, pursuant to the authority delegated to me by the Administrator, the Federal Aviation Administration proposes to amend § 39.13 of Part 39 of the FAR as follows:

1. The authority citation for Part 39 continues to read as follows:

Authority: 49 U.S.C. 1354(a), 1421 and 1423; 49 U.S.C. 106(g) (Revised, Pub. L. 97-449, January 12, 1983); and 14 CFR 11.89.

2. By adding the following new AD:

Beech: Applies to Models 65-90 and 65-A90 (S/N LJ-68 thru LJ-317); 65-A90-1, 65-A90-2, 65-A90-3, 65-A90-4, B90, C90 (all S/N); C90A (S/N LJ-1063 thru LJ-1087, except LJ-1085); E90, 100, A100 and B100 (all S/N) airplanes, certificated in any category, including those airplanes equipped with spar reinforcing straps, incorporated by Supplemental or original type certificates.

Compliance: Required as indicated after the effective date of this AD, unless already accomplished.

To detect possible fatigue cracking of the wing main spar lower cap and associated structure accomplish the following:

(a) On all airplanes with more than 5,000 hours time-in-service (TIS), within the next 200 hours TIS, or within one calendar year, whichever occurs first, inspect the wing attach fittings, center section and outboard wing spar caps by visual, fluorescent penetrant and eddy current methods as specified in the applicable section of Beech Structural Inspection and Repair Manual, Part No. 98-39006, revised December 20, 1984, or later revision (BSIR Manual).

The inspection must be performed by personnel specifically trained by Beech Aircraft Corporation.

Note 1: A listing of approved maintenance facilities may be obtained from the sources listed in paragraph (f) of this AD.

(b) If any crack is found in a main spar lower cap or fitting, prior to further flight replace the defective part using the procedures specified in the BSIR Manual or with other instructions provided by Beech Aircraft Corporation.

(c) If a crack is found, a report must be submitted within one week to the FAA, Wichita Aircraft Certification Office, 1801 Airport Road, Room 100, Mid-Continent Airport, Wichita, Kansas 67209. (Reporting approved by the Office of Management and Budget under OMB No. 2120-0056.)

(d) Airplanes may be flown in accordance with FAR 21.197 to a location where this AD can be accomplished.

(e) The compliance time for the inspections specified in this AD may be extended to coincide with the next wing bolt inspection per AD 85-22-05 if applicable.

(f) An equivalent method of compliance with this AD, if used, must be approved by the Manager, Wichita Aircraft Certification

Office, 1801 Airport Road, Room 100, Wichita, Kansas 67209; Telephone (316) 946-4400.

All persons affected by this directive may obtain copies of the documents referred to herein upon request to Beech Aircraft Corporation, Wichita, Kansas 67201 or FAA, Office of the Regional Counsel, Room 1558, 601 East 12th Street, Kansas City, Missouri 64106.

Note 2: The wing bolt inspection and outboard wing corrosion inspections specified in the BSIR Manual are recommended but not required by this AD.

Issued in Kansas City, Missouri, on May 13, 1986.

Edwin S. Harris,

Director, Central Region.

FR Doc. 86-11352 Filed 5-20-86; 8:45 am]

BILLING CODE 4910-13-M

---

14 CFR Part 39

[Docket No. 86-NM-113-AD]

Airworthiness Directives; Boeing Model 727 Series Airplanes

AGENCY: Federal Aviation Administration (FAA), DOT.

ACTION: Notice of proposed rulemaking (NPRM).

SUMMARY: This notice proposes to adopt an airworthiness directive (AD) that would amend an existing airworthiness directive (AD), applicable to certain Boeing Model 727 airplanes, which currently requires repetitive visual inspections for cracks and repair, if necessary, of the forward frame of the Number 3 cargo door cutout. This action is prompted by the development of a preventative modification that, if incorporated, would eliminate the potential for cracks developing in an undamaged frame.

DATE: Comments must be received on or before June 13, 1986.

ADDRESSES: Send comments on the proposal in duplicate to the Federal Aviation Administration, Northwest Mountain Region, Office of the Regional Counsel, Attention: Airworthiness Rules Docket No. 85-NM-113-AD, 17900 Pacific Highway South, C-68966, Seattle, Washington 98168. The applicable service information may be obtained from the Boeing Commercial Airplane Company, P.O. Box 3707, Seattle, Washington 98124. The information may be examined at FAA, Northwest Mountain Region, 17900 Pacific Highway South, Seattle, Washington, or the Seattle Aircraft Certification Office, 9010 East Marginal Way South, Seattle, Washington.

FOR FURTHER INFORMATION CONTACT: Mr. Stanton R. Wood, Airframe Branch, ANM-120S; telephone (206) 431-2924. Mailing address: FAA, Northwest Mountain Region, 17900 Pacific Highway South, C-68966, Seattle, Washington 98168.

SUPPLEMENTARY INFORMATION:

Comments Invited

Interested persons are invited to participate in the making of the proposed rule by submitting such written data, views, or arguments as they may desire. Communications should identify the regulatory docket number and be submitted in duplicate to the address specified above. All communications received on or before the closing date for comments specified above will be considered by the Administrator before taking action on the proposed rule. The proposals contained in this notice may be changed in light of the comments received. All comments submitted will be available, both before and after the closing date for comments, in the Rules Docket for examination by interested persons. A report summarizing each FAA-public contact concerned with the substance of this proposal will be filed in the Rules Docket.

Availability of NPRM

Any person may obtain a copy of this Notice of Proposed Rulemaking (NPRM) by submitting a request to the FAA, Northwest Mountain Region, Office of the Regional Counsel, Attention: Airworthiness Rules Docket No. 86-NM-113-AD, 17900 Pacific Highway South, C-68966, Seattle, Washington 98168.

Discussion

AD 84-21-04, Amendment 39-4938 (49 FR 40800), was issued October 10, 1984, to require inspection of the forward frame of the Number 3 cargo door cutout for fatigue cracks. Since issuing the AD, a preventative modification has been developed by the manufacturer that reduces the potential for cracking of the frame. This modification has been incorporated into Boeing Alert Service Bulletin 727-53A0169, Revision 1, dated March 28, 1986. This proposed amendment would terminate the repetitive inspection requirements of this AD for those airplanes that have incorporated the optional preventative modification.

Since this amendment would only provide an optional modification which, if incorporated, would relieve a repetitive inspection requirement, it would impose no additional cost on operators.

For the reasons discussed above, the FAA has determined that this document (1) involves a proposed regulation which is not major under Executive Order 12291 and (2) is not a significant rule pursuant to the Department of Transportation Regulatory Policies and Procedures (44 FR 11034; February 26, 1979); and it is certified under the criteria for the Regulatory Flexibiity Act that this proposed rule, if promulgated, will not have a significant economic impact on a substantial number of small entities because it would only add an optional modification and would not impose an additional burden on any person. A copy of a draft regulatory evaluation prepared for this action is contained in the regulatory docket.

List of Subjects in 14 CFR Part 39

Aviation safety, Aircraft.

The Proposed Amendment

PART 39—[AMENDED]

Accordingly, pursuant to the authority delegated to me by the Administrator, the Federal Aviation Administration proposes to amend § 39.13 of Part 39 of the Federal Aviation Regulations as follows:

1. The authority citation for Part 39 continues to read as follows:

Authority: 39 U.S.C. 1354(a), 1421 and 1423; 49 U.S.C. 106(g) (Revised Pub. L. 97-449, January 12, 1983); and 14 CFR 11.89.

2. By amending Airworthiness Directive (AD) 84-21-04, Amendment 39-4938, (49 FR 40800; October 10, 1984), by adding a new paragraph F., which reads as follows:

"F. Installation of the Preventative Modification described in Figure 2 of Boeing Alert Service Bulletin 727-53A0169, Revision 1, dated March 28, 1986, terminates the repetitive inspection requirements of paragraphs A. and B. of this AD."

All persons affected by this proposal who have not already received copies of the appropriate service bulletin from the manufacturer may obtain copies upon request to the Boeing Commercial Airplane Company, P.O. Box 3707, Seattle, Washington 98124-2207. This document may be examined at the FAA, Northwest Mountain Region, 17900 Pacific Highway South, Seattle, Washington, or the Seattle Aircraft Certification Office, 9010 East Marginal Way South, Seattle, Washington.

Issued in Seattle, Washington, on May 14, 1986.

David E. Jones,

Acting Director, Northwest Mountain Region.

[FR Doc. 86-11357 Filed 5-20-86; 8:45 am]

BILLING CODE 4910-13-M

14 CFR Part 71

[Airspace Docket No. 86-ANM-18]

Proposed Alteration of Lewistown, Coppertown, Bozeman, Montana; Idaho Falls, Idaho; and Ogden Municipal Airport, Utah, Control Zones

AGENCY: Federal Aviation Administration (FAA), DOT.

ACTION: Notice of proposed rulemaking.

SUMMARY: This notice proposes to change the Lewistown, Coppertown, Bozeman, Montana; and Idaho Falls, Idaho, Control Zones from full-time to part-time. A temporary reduction in personnel staffing of the Flight Service Stations at these locations has resulted in weather observations not being available 24 hours a day. This action also deletes the specified effective hours from the Ogden Municipal Airport part-time control zone which will allow flexibility in extending or reducing the control zone hours without rulemaking action.

DATE: Comments must be received on or before July 1, 1986.

ADDRESSES: Send comments on the proposal to:

Manager, Airspace & System Management Branch, ANM-530, Federal Aviation Administration, Docket No. 86-ANM-18, 17900 Pacific Highway South, C-68966, Seattle, Washington 98168.

The official docket may be examined in the Regional Counsel's office at the same address.

An informal docket may also be examined during normal business hours at the address listed above.

FOR FURTHER INFORMATION CONTACT: Katherine G. Paul, ANM-535, Federal Aviation Administration, Docket No. 86-ANM-18, 17900 Pacific Highway South, C-68966, Seattle, Washington 98168, Telephone: (206) 431-2535.

SUPPLEMENTARY INFORMATION:

Comments Invited

Interested parties are invited to participate in this proposed rulemaking by submitting such written data, views, or arguments as they may desire. Comments that provide the factual basis supporting the views and suggestions presented are particularly helpful in developing reasoned regulatory decisions on the proposal. Comments are specifically invited on the overall regulatory, economic, environmental, and energy aspects of the proposal. Communications should identify the airspace docket and be submitted to the address listed above. Commenters wishing the FAA to acknowledge receipt of their comments on this notice must submit with those comments a self-addressed, stamped postcard on which the following statement is made: "Comments to Airspace Docket No. 86-ANM-18". The postcard will be date/time stamped and returned to the commenter. All communications received before the specified closing date for comments will be considered before taking any action on the proposed rule.

The proposal contained in this notice may be changed in the light of comments received. All comments submitted will be available for examination at the address listed above both before and after the closing date for comments. A report summarizing each substantive public contact with FAA personnel concerned with this rulemaking will be filed in the docket.

Availability of NPRM's

Any person may obtain a copy of this Notice of Proposed Rulemaking (NPRM) by submitting a request to the Federal Aviation Administration, Airspace & System Management Branch, 17900 Pacific Highway South, C-68966, Seattle, Washington, 98168. Communications must identify the notice number of this NPRM. Persons interested in being placed on a mailing list for future NPRM's should also request a copy of Advisory Circular 11-2 which describes the application procedure.

The Proposal

The FAA is considering an amendment to § 71.171 of Part 71 of the Federal Aviation Regulations (14 CFR Part 71) to change the status of the Lewistown, Coppertown, Bozeman, Montana; and Idaho Falls, Idaho, Control Zones from full-time to part-time. A temporary reduction in personnel staffing of the Flight Service Stations at these locations has resulted in weather observations not being available 24 hours a day. The amendment will also delete the specified effective hours from the Ogden Municipal Airport part-time control zone which will allow flexibility in extending or reducing the control zone hours without rulemaking action.

Section 71.171 of Part 71 of the Federal Aviation Regulations was republished in Handbook 7400.6B dated January 2, 1986.

The FAA has determined that this proposed regulation only involves an established body of technical regulations for which frequent and routine amendments are necessary to keep them operationally current. It, therefore, (1) is not a "major rule" under Executive Order 12291; (2) is not a "significant rule" under DOT Regulatory Policies and Procedures (44 FR 11034; February 26, 1979); and (3) does not warrant preparation of a regulatory evalution as the anticipated impact is so minimal. Since this is a routine matter that will only affect air traffic procedures and air navigation, it is certified that this rule, when promulgated, will not have a significant economic impact on a substantial number of small entities under the criteria of the Regulatory Flexibility Act.

List of Subjects in CFR Part 71

Aviation safety, Control zones.

The Proposed Amendment

Accordingly, pursuant to the authority delegated to me, the Federal Aviation Administration (FAA) proposes to amend Part 71 of the Federal Aviation Regulations (14 CFR Part 71) as follows:

PART 71—[AMENDED]

1. The authority citation for Part 71 continues to read as follows:

Authority: 49 U.S.C. 1348(a), 1354(a), 1510; Executive Order 10854; 49 U.S.C. 106(g) (Revised Pub. L. 97-449, January 12, 1983); 14 CFR 11.69.

2. § 71.171 is amended as follows:

§ 71.171 [Amended]

Lewistown, Montana [Amended]

Add "The control zone shall be effective during the specified dates and times established in advance by a Notice to Airmen. The effective date and time will thereafter be continuously published in the Airport/Facility Directory."

Coppertown, Montana [Amended]

Add "The control zone shall be effective during the specified dates and times established in advance by a Notice to Airmen. The effective date and time will thereafter be continuously published in the Airport/Facility Directory."

Bozeman, Montana [Amended]

Add "The control zone shall be effective during the specified dates and times established in advance by a Notice to Airmen. The effective date and time will thereafter be continuously published in the Airport/Facility Directory."

Idaho Falls, Idaho [Amended]

Add "The control zone shall be effective during the specified dates and times established in advance by a Notice to Airmen. The effective date and time will thereafter be continuously published in the Airport/Facility Directory."

Ogden Municipal Airport, Utah [Amended]

Delete "from 0600 to 2200 hours, local time, daily."

Add "The control zone shall be effective during the specified dates and times

established in advance by a Notice to Airmen. The effective date and time will thereafter be continuously published in the Airport/Facility Directory."

Issued in Seattle, Washington, on May 12, 1986.

Temple H. Johnson, Jr.,

Acting Manager, Air Traffic Division, Northwest Mountain Region.

[FR Doc. 86-11348 Filed 5-20-86; 8:45 am]

BILLING CODE 4910-13-M

---

14 CFR Part 71

[Airspace Docket No. 86-ASO-17]

Proposed Alteration of Transition Area, Erwin, NC

AGENCY: Federal Aviation Administration (FAA), DOT.

ACTION: Notice of proposed rulemaking.

SUMMARY: This notice proposes to increase the size of the Erwin, North Carolina, transition area to accommodate a new instrument approach procedure which has been developed to serve Harnett County Airport. This action will lower the base of controlled airspace, northeast of the airport, from 1,200 to 700 feet above the surface. This additional controlled airspace is required for protection of Instrument Flight Rules (IFR) aeronautical activities.

DATE: Comments must be received on or before July 1, 1986.

ADDRESS: Send comments on the proposal in triplicate to Federal Aviation Administration, ASO-530, Manager, Airspace and Procedures Branch, Docket No. 86-ASO-17, P.O. Box 20636, Atlanta, Georgia 30320.

The official docket may be examined in the Office of the Regional Counsel Room 652, 3400 Norman Berry Drive, East Point, Georgia 30344; telephone: (404) 763-7646.

FOR FURTHER INFORMATION CONTACT: Donald Ross, Supervisor, Airspace Section, Airspace and Procedures Branch, Air Traffic Division, Federal Aviation Administration, P.O. Box 20636, Atlanta, Georgia 30320; telephone: (404) 763-7646.

SUPPLEMENTARY INFORMATION:

Comments Invited

Interested parties are invited to participate in this proposed rulemaking by submitting such written data, views or arguments as they may desire. Comments that provide the factual basis supporting the views and suggestions presented are particularly helpful in developing reasoned regulatory decisions on the proposal. Comments are specifically invited on the overall regulatory, economic, environmental, and energy aspects of the proposal. Communications should identify the airspace docket and be submitted in triplicate to the address listed above. Commentors wishing the FAA to acknowledge receipt of their comments on this notice must submit with those comments a self-addressed, stamped postcard on which the following statement is made: "Comments to Airspace Docket No. 86-ASO-17." The postcard will be date/time stamped and returned to the commenter. All communications received before the specified closing date for comments will be considered before taking action on the proposed rule. The proposal contained in this notice may be changed in the light of comments received. All comments submitted will be available for examination in the Office of the Regional Counsel, Room 652, 3400 Norman Berry Drive, East Point, Georgia 30344, both before and after the closing date for comments. A report summarizing each substantive public contact with FAA personnel concerned with this rulemaking will be filed in the docket.

Availability of NPRM's

Any person may obtain a copy of this Notice of Proposed Rulemaking (NPRM) by submitting a request to the Federal Aviation Administration, Manager, Airspace and Procedures Branch (ASO-530), Air Traffic Division P.O. Box 20636, Atlanta, Georgia 30320. Communications must identify the notice number of this NPRM. Persons interested in being placed on a mailing list for future NPRM's should also request a copy of Advisory Circular No. 11-2 which describes the application procedure.

The Proposal

The FAA is considering an amendment to § 71.181 of Part 71 of the Federal Aviation Regulations (14 CFR Part 71) which will alter the Erwin, North Carolina, transition area by designating additional controlled airspace northeast of Harnett County Airport. This airspace is required to support IFR aeronautical activities in the Erwin area. Section 71.181 of Part 71 of the Federal Aviation Regulations was republished in FAA Handbook 7400.6B dated January 2, 1986.

The FAA has determined that this proposed regulation only involves an established body of technical regulations for which frequent and routine amendments are necessary to keep them operationally current. It, therefore, (1) is not a "major rule" under Executive Order 12291; (2) is not a "significant rule" under DOT Regulatory Policies and Procedures (44 FR 11034; February 26, 1979); and (3) does not warrant preparation of a regulatory evaluation as the anticipated impact is so minimal. Since this is a routine matter that will only affect air traffic procedures and air navigation, it is certified that this rule, when promulgated, will not have a significant economic impact on a substantial number of small entities under the criteria of the Regulatory Flexibility Act.

List of Subjects in 14 CFR Part 71

Aviation safety, transition area.

The Proposed Amendment

Accordingly, pursuant to the authority delegated to me, the Federal Aviation Administration (FAA) proposes to amend Part 71 of the Federal Aviation Regulations (14 CFR Part 71) as follows:

PART 71—[AMENDED]

1. The authority citation for Part 71 continues to read as follows:

Authority: 49 U.S.C. 1348(a), 1354(a), 1510; Executive Order 10854; 49 U.S.C. 106(g) (Revised Public Law 97-449, January 12, 1983); 14 CFR 11.69.

2. § 71.181 is amended as follows:

§ 71.181 [Amended]

Erwin, NC—[Revised]

Following . . . longitude 78°44'04" W.); . . . insert the following words: "within three miles each side of the 042° bearing from the Harnett RBN (lat. 35°25'59" N., long. 78°40'31"W.), extending from the 7.5 mile radius area to 8.5 miles northeast of the RBN; . . . .".

Issued in East Point, Georgia, on May 9, 1986.

James L. Wright,

Acting Manager, Air Traffic Division, Southern Region.

[FR Doc. 86-11355 Filed 5-20-86; 8:45 am]

BILLING CODE 4910-13-M

---

14 CFR Part 71

[Airspace Docket No. 86-SO-18]

Proposed Alteration of Transition Area, Smithfield, NC

AGENCY: Federal Aviation Administration (FAA), DOT.

ACTION: Notice of proposed rulemaking.

SUMMARY: This notice proposes to increase the size of the Smithfield, North Carolina, transition area to accommodate changes in an instrument approach procedure which serves

Johnston County Airport. This action will lower the floor of controlled airspace in an area northeast of the airport from 1,200 to 700 feet above the surface.

DATE: Comments must be received on or before July 1, 1986.

ADDRESSES: Send comments on the proposal in triplicate to: Federal Aviation Administration, ASO-530, Manager, Airspace and Procedures Branch, Docket No. 86-ASO-18, P.O. Box 20636, Atlanta, Georgia 30320.

The official docket may be examined in the Office of the Regional Counsel, Room 652, 3400 Norman Berry Drive, East Point, Georgia 30344, telephone: (404) 763-7646.

FOR FURTHER INFORMATION CONTACT: Donald Ross, Supervisor, Airspace Section, Airspace and Procedures Branch, Air Traffic Division, Federal Aviation Administration, P.O. Box 20636, Atlanta, Georgia 30320; telephone (404) 763-7646.

SUPPLEMENTARY INFORMATION:

Comments Invited

Interested parties are invited to participate in the proposed rulemaking by submitting such written data, views or arguments as they may desire. Comments that provide the factual basis supporting the views and suggestions presented are particularly helpful in developing reasoned regulatory decisions on the proposal. Comments are specifically invited on the overall regulatory, economic, environmental, and energy aspects of the proposal. Communications should identify the airspace docket and be submitted in triplicate to the address listed above. Commenters wishing the FAA to acknowledge receipt of their comments on this notice must submit with those comments a self-addressed, stamped postcard on which the following statement is made: "Comments to Airspace Docket No. 86-ASO-18." The postcard will be date/time stamped and returned to the commenter. All communications received before the specified closing date for comments will be considered before taking action on the proposed rule. The proposal contained in this notice may be changed in the light of comments received. All comments submitted will be available for examination in the Office of the Regional Counsel, Room 652, 3400 Norman Berry Drive, East Point, Georgia 30344, both before and after the closing date for comments. A report summarizing each substantive public contact with FAA personnel concerned with this rulemaking will be filed in the docket.

Availability of NPRM's

Any person may obtain a copy of this Notice of Proposed Rulemaking (NPRM) by submitting a request to the Federal Aviation Administration, Manager, Airspace and Procedures Branch (ASO-530), Air Traffic Division, P.O. Box 20636, Atlanta, Georgia 30320. Communications must identify the notice number of this NPRM. Persons interested in being placed on a mailing list for future NPRM's should also request a copy of Advisory Circular No. 11-2 which describes the application procedure.

The Proposal

The FAA is considering an amendment to § 71.181 of Part 71 of the Federal Aviation Regulations (14 CFR Part 71) which will alter the Smithfield, North Carolina, transition area by designating additional controlled airspace northeast of Johnston County Airport. This airspace is required to support Instrument Flight Rule aeronautical activities in the Smithfield area. Section 71.181 of Part 71 of the Federal Aviation Regulations was republished in FAA Handbook 7400.6B dated January 2, 1986.

The FAA has determined that this proposed regulation only involves an established body of technical regulations for which frequent and routine amendments are necessary to keep them operationally current. It, therefore, (1) is not a "major rule" under Executive Order 12291; (2) is not a "significant rule" under DOT Regulatory Policies and Procedures (44 FR 11034; February 26, 1979); and (3) does not warrant preparation of a regulatory evaluation as the anticipated impact is so minimal. Since this is a routine matter that will only affect air traffic procedures and air navigation, it is certified that this rule, when promulgated, will not have a significant economic impact on a substantial number of small entities under the criteria of the Regulatory Flexibility Act.

List of Subjects in 14 CFR Part 71

Aviation safety, Transition area.

The Proposed Amendment

Accordingly, pursuant to the authority delegated to me, the Federal Aviation Administration (FAA) proposes to amend Part 71 of the Federal Aviation Regulations (14 CFR Part 71) as follows:

PART 71—[AMENDED]

1. The authority citation for Part 71 continues to read as follows:

Authority: 49 U.S.C. 1348(a), 1354(a), 1510; Executive Order 10854; 49 U.S.C. 106(g) (Revised Public Law 97-449, January 12, 1983); 14 CFR 11.69.

2. Section 71.181 is amended as follows:

§ 71.181 [Amended]

Smithfield, NC—[Revised]

That airspace extending upward from 700 feet above the surface within a seven-mile radius of Johnston County Airport (lat. 35°32'36" N., long. 78°23'21" W.); within 3.5 miles each side of the 024° bearing from the Neuse RBN (lat. 35°36'24" N., long. 78°21'17" W.), extending from the seven-mile radius area to 9.5 miles northeast of the RBN.

Issued in East Point, Georgia, on May 9, 1986.

James L. Wright,

Acting Manager, Air Traffic Division, Southern Region.

[FR Doc. 86-11356 Filed 5-20-86; 8:45 am]

BILLING CODE 4910-13-M

Office of the Secretary

14 CFR Part 303

[Docket No. 44015; Notice No. 86-3]

Exemption From Prior Approval Requirements for Certain Transactions

Correction

In FR Doc. 86-10735 beginning on page 17490 in the issue of Tuesday, May 13, 1986, make the following correction:

On page 17491, in the first column, the sixth line from the bottom should read "acquisitions of other air carriers should not".

BILLING CODE 1505-01-M

DEPARTMENT OF COMMERCE

15 CFR Part 21

[Docket No. 60462-6062]

Federal Claims Collection; Debt Collection Act of 1982; Administrative Offset

AGENCY: Office of the Secretary, Commerce.

ACTION: Proposed rule.

SUMMARY: The Debt Collection Act of 1982 (Pub. L. 97-365) authorizes the Federal Government of collect debts owed it by means of administrative offset. This proposed rule will implement the Act by establishing procedures which the Department of Commerce (hereinafter referred to as "the Department") will follow in making an administrative offset.

DATES: Comments must be received on or before June 20, 1986.

ADDRESS: Send comments to Sonya G. Stewart, Director, Office of Finance and Federal Assistance, Office of the Secretary, Deprtment of Commerce, Room 6827, Herbert C. Hoover Building, 14th & Constitution Avenue NW., Washington, DC 20230.

FOR FURTHER INFORMATION CONTACT: Roger J. Mallet, telephone (202) 377-2324.

SUPPLEMENTARY INFORMATION: The Debt Collection Act of 1982 (the Act) amends the Federal Claims Collection Act of 1966 by enhancing the Government's ability to collect money owed it through the establishment of new debt collection techniques such as administrative offset. This proposed rule contains the Department's provisions to implement administrative offsets in collecting delinquent accounts. The provisions are consistent with the Federal Claims Collection Standards issued jointly by the Department of Justice and the General Accounting Office as final standards on March 9, 1984 (See 49 FR 8889).

The Act states that administrative offset is the withholding of money payable by the United States to, or held by the United States on behalf of a person, to satisfy a debt owed the United States by that person. For example, an administrative offset could be initiated by the Department against payments to be made by another Federal department or agency to a debtor on a Federal loan, contract, or a grant. For administrative offset, the Act requires that the agency observe notice and procedural requirements before any offset is made. Administrative offsets may be made to satisfy an outstanding debt up to ten years from the date the Government's right to collect the debt first accrued. In defining "person", the Act states that administrative offset does not apply to an agency of the United States Government, or of a State or local government.

The administrative offset procedures proposed by the Department cover such aspects of offset as: (1) Coordinating collection action with another Federal agency (for example, when the Commerce Department needs another Federal agency to collect the money by offset), (2) notifying debtors prior to offsets being made, (3) providing the debtor with the opportunity to review the Department's records related to the particular debt, (4) providing the debtor with the opportunity to enter into a debt repayment agreement with the Department, and (5) establishing time periods in which the debtor must notify the Department of his or her election of any of these procedures. Review of the record includes a review by the debtor of the written record pertaining to the debt, and, in some situations, an oral hearing. The conditions for these two procedures are outlined in this rule.

Pending adoption of this proposed rule, the Department may pursue administrative offsets against a debtor is (1) failure to take such action would substantially prejudice the Government's ability to collect the debt, or (2) the time before the payment is to be made to a debtor by another Federal agency does not reasonably permit final adoption of this proposed rule.

Specific interim procedures for offset against amounts payable from the Civil Service Retirement and Disability Fund are covered in this proposed rule. The Department will amend these procedures following publication of prescribed final amendments to (5 CFR 831) regulations by the Director, Office of Personnel Management (OPM). Proposed regulations were published on this subject by OPM on January 4, 1985 (50 *FR* 473).

Executive Order 12291

This proposed action has been reviewed and has been determined not to be a "major rule" as defined in Executive Order 12291 dated February 17, 1981, because it will not result in:

(1) An annual effect on the economy of $100 million or more;

(2) A major increase in costs or prices for consumers, individual industries, Federal, State, or local Government agencies, or geographic regions; or

(3) Significant adverse effects on competition, employment, investment, productivity, innovation, or on the ability of United States-based enterprises to compete with foreign-based enterprises in domestic or export markets.

Regulatory Flexibility Act

The Department believes that the proposed rule will have no "significant economic impact upon a substantial number of small entities" within the meaning of section 3(a) of the Regulatory Flexibility Act, Pub. L. 96-354, Stat. 1164 (5 U.S.C. 605(b)). The General Counsel has certified to the Chief Counsel for Advocacy of the Small Business Administration to this effect. This conclusion is reached because the proposed rule does not, in itself, impose any additional requirements upon small entities. Accordingly, no regulatory flexibility analysis is required.

Paperwork Reduction Act

Under section 3518 of the Paperwork Reduction Act of 1980 and 5 CFR 1320.3(c), the information contained in this proposed regulation is not subject to the Office of Management and Budget review and approval.

List of Subjects in 15 CFR Part 21

Claims.

For the reasons set forth above, it is proposed that Part 21 be added to 15 CFR Subtitle A to read as follows:

PART 21—ADMINISTRATIVE OFFSET

Sec.
21.1 Definitions.
21.2 Purpose and scope.
21.3 Department responsibilities.
21.4 Notification requirements before offset.
21.5 Exceptions to notification requirements.
21.6 Written agreement to repay debt.
21.7 Review of Department records related to the debt.
21.8 Review within the Department of a determination of indebtedness.
21.9 Stay of offset.
21.10 Types of reviews.
21.11 Review procedures.
21.12 Determination of indebtedness and appeal from determination.
21.13 Coordinating administrative offset within the Department and with other federal agencies.
21.14 Notice of offset.
21.15 Procedures for administrative offset: single debt.
21.16 Procedures for administrative offset: multiple debts.
21.17 Administrative offset against amounts payable from Civil Service Retirement and Disability Fund.
21.18 Collection against a judgment.
21.19 Liquidation of collateral.
21.20 Collection in installments.
21.21 Additional administrative collection action.

Authority: 31 U.S.C. 3711; 4 CFR 102.

§ 21.1 Definitions.

For purposes of this subpart:

(a) The term "administrative offset" means satisfying a debt by withholding of money payable by the Department to, or held by the Department on behalf of a person, to satisfy a debt owed the Federal Government by that person.

(b) The term "person" includes individuals, businesses, organizations and other entities, but does not include any agency of the United States, or any State or local government.

(c) The term "claim" and "debt" are deemed synonymous and interchangeable. They refer to an amount of money or property which has been determined by an appropriate agency official to be owed to the United States from any person, organization, or

entity, except another Federal agency, a State or local government, or Indian Tribal Government.

(d) Agency means:

(1) An Executive department, military department, Government corporation, or independent establishment as defined in 5 U.S.C. § 101, 102, 103, or 104, respectively.

(2) The United States Postal Service; or

(3) The Postal Rate Commission.

(e) Debtor means the same as "person."

(f) "Department" means the Department of Commerce.

(g) "Secretary" means the Secretary of the Department of Commerce.

(h) "Assistant Secretary for Administration" means the Assistant Secretary for Administration of the Department of Commerce.

(i) "United States" includes an "agency" of the United States.

(j) "Waiver" means the cancellation, remission, forgiveness, on non-recovery of a debt allegedly owed by a person to the United States.

(k) "Departmental Unit" means an individual operating or administrative component within the Department of Commerce.

(l) "Departmental Unit Head" means the head of an individual operating or administrative component within the Department of Commerce responsible for debt collection.

(m) "Notice of Intent" means the second demand notice sent by the Department to the debtor indicating not only the amount due, but also the Department's intent to offset all or some of the amount due from other source(s) of Federal payment(s) that may be due a debtor.

(n) "Workout Group" means Departmental debt collection specialist(s) assigned to collection of a delinquent debt when the claim is 30 or more days past due.

§ 21.2 Purpose and scope.

(a) The proposed regulations in this subpart establish procedures to implement section 10 of the Debt Collection Act of 1982 (Pub. L. 97–365), 31 U.S.C. 3716. Among other things, this statute authorizes the head of each agency to collect a claim arising under an agency program by means of administrative offset, except that no claim may be collected by such means if outstanding for more than 10 years after the agency's right to collect the debt first accrued, unless facts material to the Government's right to collect the debt were not known and could not reasonably have been known by the official or officials of the Government who were charged with the responsibility to discover and collect such debts.

(b) Unless otherwise provided for by statute, these proposed regulations do not apply to an agency of the United States, a State government, or unit of general local government. In addition, these procedures do not apply to debts arising under the Internal Revenue Code of 1954 (26 U.S.C. 1–9602), the Social Security Act (42 U.S.C. 301–1397f), or the tariff laws of the United States; and to contracts covered by the Contract Disputes Act of 1978 (41 U.S.C. 601–613).

(c) The proposed regulations cover debts owed to the United States from any person, organization or entity, including debts owed by current and former Department employees, or other Federal employee, while employed in one capacity or another by the Department of Commerce.

(d) Debts or payments which are not subject to administrative offset under 31 U.S.C. 3716, unless otherwise provided for by contract or law, may be collected by administrative offset under the common law or other applicable statutory authority.

(e) Departmental units heads (and designees) will use administrative offset to collect delinquent claims which are certain in amount in every instance and which collection is determined to be feasible and not prohibited by law.

§ 21.3 Department responsibilities.

(a) Each Department of Commerce unit which has delinquent debts owed under its program is responsible for collecting its claims by means of administrative offset when appropriate and best suited to further and protect all the Government's interest.

(b) The Departmental unit head (or designee) will determine the feasibility and cost effectiveness of collection by administrative offset on a case-by-case basis, exercising sound discretion in pursuing such offsets, and will consider the following:

(1) The debtor's financial condition;

(2) Whether offset would substantially interfere with or defeat the purposes of the Federal program authorizing the payments against which offset is contemplated; and

(3) Whether offset best serves to further and protect all of the interest in the United States.

(c) Before advising the debtor that the delinquent debt will be subject to administrative offset, the Departmental unit workout groups shall review the claim and determine that the debt is valid and overdue. In the case where a debt arises under the programs of two or more Department of Commerce units, or in such other instances as the Assistant Secretary for Administration or his/her designee may deem appropriate, the Assistant Secretary, or his or her designee, may determine which Departmental unit workout group or official(s) shall have responsibility for carrying out the provisions of this subpart.

(d) Administrative offset shall be considered by Department units only after attempting to collect a claim under section 3(a) of the Federal Claims Collection Act of 1966, as amended; except that no claim under this Act that has been outstanding for more than 10 years after the debt first accrued may be collected by means of administrative offset, unless facts, material to the right to collect the debt, were not known and could not reasonably have been known by the official of the Department who was charged with the responsibility to discover and collect such debts. When the debt first accrued should be determined according to existing laws regarding the accrual of debts, such as under 28 U.S.C. 2415.

§ 21.4 Notification requirements before offset.

A debt is considered delinquent by the Department if it is not paid within 15 days of the due date, or if there is no due date, within 30 days of the billing date.

(a) The Departmental unit head (and designees) responsible for carrying out the provisions of this subpart with respect to the debt shall ensure that appropriate written demands are sent to the debtor in terms which inform the debtor of the consequences of failure to cooperate in payment of the debt. The first demand letter should be sent within ten (10) days after the date the debt becomes delinquent. A total of three progressively stronger written demand letters, at not more than 30 calendar day intervals, will normally be made unless a response to the first or second demand indicates that a further demand would be futile and/or the debtor's response does not require any or immediate rebuttal. In determining the timing of the demand letters, Departmental unit heads should give due regard to the need to act promptly; so as a general rule, if it is necessary to refer the debt to the Department of Justice for action, such referral can be made within one year of the final determination of the facts and the amount of the debt. When Departmental unit heads (and designees) deem it appropriate to protect the Government's interests (for example, to prevent the statute of limitations, 28 U.S.C. 2415, from

expiring), written demand for payment may be preceded by other appropriate actions.

(b) The Department official responsible for collection of the debt (generally an accounting or finance officer) shall ensure that an initial written demand notice is sent to the debtor, informing such debtor of:

(1) The basis for the indebtedness and whatever rights the debtor may have to seek review within the Department;

(2) The applicable standards for assessing interest, penalties, and administrative costs (4 CFR 102.13);

(3) That the debtor has a right to inspect and copy Department records related to the debt, as determined by responsible Departmental official(s), and that such request to inspect and copy must be postmarked or received by the Department no later than 30 days after the date of the (first) demand letter;

(4) The name, mailing address, and telephone number of the department workout group employee who can provide a full explanation of the claim and answer all related questions, as well as explain procedures to the debtor for inspecting and copying records related to the debt.

(c) The responsible Department officials shall exercise due care to insure that demand letters are mailed or hand delivered on the same day that they are actually dated. If evidence suggests that the debtor is no longer located at the address of record, reasonable action shall be taken by the Departmental unit workout group to obtain a current address, including skip-trace assistance from the Internal Revenue Service and/or private sector credit reporting bureaus.

(d) Where applicable, the Departmental unit workout group must inform the debtor in the second demand letter ("Notice of Intent") of:

(1) The nature and amount of the debt;

(2) That the Department intends to collect the debt by administrative offset until the debt and all accumulated interest and other charges are paid in full;

(3) That the debtor has a right to obtain review within the Department of the initial determination of indebtedness, and that such request to have a review of the basis of indebtedness must be postmarked or received by the Department no later than 30 days after the date of the second demand letter (Notice of Intent); and

(4) That the debtor may enter into a written agreement with the responsible Department official(s) to repay the debt if such a request is made and received by the Department no later than 30 days after the date of the second demand letter (Notice of Intent).

If the sum of the proposed offset does not fully cover the amount of the debt owed, the departmental unit workout group shall also include in this second demand letter ("Notice of Intent") the notice provisions to debtors required by the Debt Collection Act of 1982, and other regulations of the Department, pertaining to disclosure of the delinquent debt to credit reporting agencies, referral to private collection agencies, salary offset, possible Internal Revenue Service offset of tax refunds, and referral of the debt to the Justice Department for action to the extent inclusion of such is appropriate and practical.

(e) The third demand letter will inform the debtor that administrative offset will be taken and will give the date for such action (see § 21.14).

§ 21.5 Exceptions to notification requirements.

(a) In cases where the notice specified in § 21.4 already have been provided to the debtor in connection with the same debt under some other proceeding, such as a final audit resolution determination, the Department is not required to duplicate those requirements before effecting administrative offset.

(b) The departmental unit workout group may effect an administrative offset against a payment to be made to a debtor before final adoption of this proposed regulation if (1) failure to make the offset would substantially prejudice the Government's ability to collect the debt, and (2) the time before the payment is to be made to a debtor does not reasonably permit final adoption of this proposed regulation (See Comptroller General of the United States Published Decision, File B-219781, September 3, 1985). Amounts recovered by administrative offset during the proposed rulemaking period, but later found not to be owed by the debtor(s) to the agency, will be refunded promptly.

§ 21.6 Written agreement to repay debt.

A debtor will be provided with an opportunity to enter into a written agreement with the responsible Departmental official(s) to repay the debt owed if the following conditions are met and if specific conditions exist that limit his or her ability to immediately repay the debt.

(a) Notification by debtor. The debtor may, in response to the first written demand or Notice of Intent, propose a written agreement for delayed lump sum or installment payments to repay the debt as an alternative to administrative offset. Any debtor who wishes to do this must submit a proposed written agreement signed by the debtor to repay the debt, including interest, penalties, and administrative costs determined by the Department as due. This proposed written agreement must be received by the workout group individual specified in § 21.4(b)(4) within 60 calendar days of the date of the Department's initial written demand letter, or if in response to the Notice of Intent, within 30 calendar days of the date of the Department's Notice of Intent.

(b) Department response. In response to timely notification by the debtor as described in the paragraph (a) of this section, the departmental unit head (or designee) will notify the debtor within 30 calendar days whether the debtor's proposed written agreement for repayment is acceptable. It is within the discretion of the departmental unit head (or designee) to accept a repayment agreement instead of proceeding by offset. However, if the debt is delinquent and the debtor has not disputed its existence or amount, the departmental unit head (or designed) should accept a repayment agreement instead of offset only if the debtor is able to establish that offset would result in undue financial hardship or would be against equity and good conscience. Before accepting a repayment agreement, the departmental unit head (or designee) will also consider factors such as the financial statements provided by the debtor, the amount of the debt, the length of the proposed repayment period (generally not to exceed 3 years), whether the debtor is willing to sign a confess-judgment note or give collateral, and past dealings with the debtor. In making this determination, the departmental unit head (or designee) will balance the Department's interest in collecting the debt against the financial hardship to the debtor (see § 21.20). A departmental unit had (or designee) may deem a repayment plan to be abrogated if the debtor should, after the repayment plan is signed, fail to comply with the terms of the plan.

§ 21.7 Review of Department records related to the debt.

(a) Notification by debtor. A debtor who intends to inspect or copy Department records related to the debt must send a letter to the departmental unit workout group employee specified in § 21.4(b)(4) stating his or her intentions. The letter must be postmarked or received by the Department within 30 calendar days of the date of the Department's first demand letter.

(b) Department response. In response to timely notification by the debtor as described in paragraph (a) of this section, the departmental unit workout group will notify the debtor within 10 days of the request of the location and time when the debtor may inspect or copy agency records related to the debt, as well as provide the debtor with the name and telephone number of the contact person who may provide assistance to the debtor for ensuring that copies are made of all appropriate documents related to the debt. The debtor may also request that such records be copied and mailed. The responsible Department official(s) will provide access to records within 15 days from the date of the debtor's request for access, or mail the records to the debtor within such time period. Mailing of records by departmental official(s) will be by certified or registered mail. The debtor will have 30 days from date of access, or receipt of records by mail, to review the records and petition the Department for a review of the determination of indebtedness.

§ 21.8 Review within the Department of a Determination of Indebtedness.

(a) Notification by debtor. A debtor who receives an initial demand for payment under the procedures, or a Notice of Intent (see § 21.4(d)), has the right to request Department review of the determination of indebtedness. To exercise this right, the debtor must send a letter requesting review to the departmental unit workout group individual identification § 21.4(b)(4). The letter must explain why the debtor seeks review and must be postmarked within 60 calendar days of the date of the first demand letter (or 30 days from the Notice of Intent), or if a request has been made by the debtor to copy or have relevant records mailed, within the 30 calendar-day time period provided in § 21.7(b), above.

(b) Department response. In response to a timely request for review of the initial determination of indebtedness, the Department unit head (or designee) will notify the debtor whether review will be by (1) oral hearing, or (2) by administrative review of the record. The notice to the debtor will include the procedures used by Departmental officials for administrative review of the record, or will include information on the date, location and procedures to be used if review is by an oral hearing.

§ 21.9 Stay of Offset.

If the debtor notifies the departmental unit head (or designee) within the 30-day time frame provided in § 21.6 and § 21.8 that he or she is exercising a right described in § 21.6 or § 21.8, the offset will be stayed until the departmental unit head (or designee) either makes a determination concerning the debtor's proposal to repay the debt or issues a written decision following review of the record or, where appropriate, an oral hearing. However, interest will continue to accrue during any stay provided by the Department.

§ 21.10 Types of reviews.

The Department will provide the debtor with an opportunity for an oral hearing, or an administrative review of the documentation relating to the debt, under the following conditions.

(a) Oral hearing. The Departmental unit head (or designee) will provide the debtor with a reasonable opportunity for hearing if:

(1) An applicable statute authorizes or requires the Department to consider waiver of the indebtedness, the debtor requests waiver of the indebtedness involved, and the waiver determination turns on credibility or veracity; or

(2) The debtor requests reconsideration of the debt and the departmental unit head (or designee) determines that the question of the indebtedness cannot be resolved by review of the documentary evidence.

(3) An oral hearing need not be a formal (evidentiary type) hearing. However, hearing officials should carefully document all significant matters discussed at the hearing.

(b) Administrative Review of Written Record. Unless the departmental unit head (or designee) determines that an oral hearing is required (see paragraph (a) of this section), the agency head (or designee) will provide for a review of the written record(s) (a review of the documentary evidence related to the debt, in the form of a "paper hearing").

§ 21.11 Review procedures.

(a) The oral hearing will be conducted as follows:

(1) The hearing official will take necessary steps to ensure that the hearing is conducted in a fair and expeditious manner. If necessary, the hearing officer may administer oaths of affirmation.

(2) The hearing official need not use the formal rules of evidence with regard to admissibility of evidence or the use of evidence once admitted. However, parties may object to clearly irrelevant material.

(3) The hearing official will record all significant matters discussed at the hearing. There will be no "official" record or transcript provided for these hearings.

(4) A debtor may represent himself or herself or may be represented by an attorney or other person. The Department will be represented by the General Counsel or his designee.

(5) The General Counsel (or designee) will proceed first by presenting evidence on the relevant issues. The debtor then presents his or her evidence regarding these issues. The General Counsel then may offer evidence to rebut or clarify the evidence introduced by the debtor.

(b) Administrative Review of the Record: The departmental unit head (or designee) will designate an official of the Department as hearing official who will review administrative determinations of indebtedness which are not reviewable under criteria provided in § 21.10(a) for justifying an oral hearing. the hearing official will review all mateial related to the debt which is in the possession of the Department. The hearing official will make a determination based upon a review of this written record, which may include a request for reconsideration of the determination of indebtedness, or such other relevant material submitted by the debtor.

(c) The Department may effect an administrative offset against a payment to be made to a debtor prior to the completion of the due process procedures required by this section, if failure to take the offset would substantially prejudice the Department's ability to collect the debt. For example, if the time before the payment is to be made to the debtor by another Federal department or agency would not reasonably permit the completion of due process procedures, the offset may be accomplished by the Department. such offset prior to completion of due process review hearing will be promptly followed by the completion of review and decision by the hearing official on the validity of the debt. Amounts recovered by offset in these instances, but later found not owed to the agency, will be promptly refunded.

§ 21.12 Determination of indebtedness and appeal from determination.

(a) Following the hearing or the review of the record, the hearing official will issue a written decision which includes the supporting rationale for the decision. The decision of the hearing official is the Department unit's final action with regard to the particular administrative offset.

(b) Copies of the hearing official's decision will be distributed to the General Counsel (or designee) for the Department, the Director of the Department's Office of Finance and

Federal Assistance, the appropriate Departmental unit accounting/finance officer, the debtor and the debtor's attorney or other representative, if applicable.

(c) If appropriate, this decision shall inform the debtor of the scheduled date on or after which administrative offset will begin. The decision shall also, if appropriate, indicate any changes in the information to the extent such information differs from that provided in the initial notification under § 21.4.

(d) Nothing in this subpart shall preclude the Department, upon request of the debtor alleged by a Departmental unit to be responsible for a debt, or on its own initiative, from reviewing the obligation of such debtor, including an opportunity for reconsideration of the determination concerning th debt, including the accuracy, timeliness, relevance, and completeness of the information on which the debt is based.

§ 21.13 Coordinating administrative offset within the Department and with other Federal agencies.

Departmental units and offices will cooperate with other Federal departments and agencies in effecting collection by administrative offset. Whenever possible, Commerce offices should comply with requests from within the Department and from other Federal agencies to initiate administrative offset procedures to collect debts owed the United States, unless the requesting office or agency has not complied with the Federal Claims Collection Standards, or the agency's implementing regulations, or the request would otherwise be contrary to law or the best interests of the United States.

(a) When the Department is owed the debt. When the Department is owed a debt, but another Federal agency is responsible for making the payment to the debtor against which administrative offset is sought, the other agency will not initiate the requested administrative offset until the Department provides responsible officials at that agency with a written certification that the debtor owes the Department a debt (including the amount and basis for the debt and the due date of the payment) and that the Department has complied fully with Part 102, "Standards for the Administrative Collection of Claims", of the Federal Claims Collection Standards, as well as the Department's implementing regulations on administrative offsets.

(b) When another agency is owed the debt. The Department may administratively offset money it owes to a person who is indebted to another agency if requested to do so by that agency. Such a request must be accompanied by a certification by the requesting agency that the person owes the debt (including the amount and basis for the debt) and that the creditor agency has complied with the applicable Federal Claims Collection Standards, as well as the agency implementation regulations on administrative offsets. The request from another Federal agency for Department cooperation in the offset should be sent to:

Director, Office of Finance and Federal Assistance, Room 6827, Herbert C. Hoover Building, Washington, DC. 20230.

§ 21.14 Notice of offset.

Prior to effecting an administrative offset, the Department official responsible for collecting the debt will advise the debtor of the impending offset. This will be the third and final notice to the debtor (see § 21.4). This notice should state that the debtor has been provided his/her rights under the Federal Claims Collection Standards, that a determination has been made that collection by administrative offset would be in the best interests of the United States, and state the amount of the offset, the source of funds from which the offset will be made, and the date the offset will be accomplished. The third notice need not be provided to those debtors that have been provided with a hearing on determination of indebtedness or under the exceptions provided under § 21.5.

§ 21.15 Procedures for administrative offset: single debts.

(a) Administrative offset will commerce 31 days after the debtor receives the Notice of Intent, unless the debtor has requested a hearing (see § 21.8) or has entered into a repayment agreement (see § 21.6).

(b) When there is review of the debt within the Department, administrative offset will begin after the hearing officer's determination has been issued under § 21.12 and a copy of the determination is received by the Departmental unit's accounting or finance office, except for the provision provided in § 21.11(c) when immediate action is determined necessary to ensure the Department's position in collection of the delinquent debt.

§ 21.16 Procedures for administrative offset: multiple debts.

The Departmental units will follow the procedures identified in (§ 21.15) for the administrative offset of multiple debts. However, when collecting multiple debts by administrative offset, responsible Departmental officials should apply the recovered amounts to those debts in accordance with the best interests of the United States, as determined by the facts and circumstances of the particular case, paying special attention to applicable statutes of limitations.

§ 21.17 Administrative offset against amounts payable from Civil Service Retirement and Disability Fund.

(a) Unless otherwise prohibited by law, the Department may request that monies which are due and payable to a debtor from the Civil Service Retirement and Disability Fund be administratively offset in reasonable amounts in order to collect debts owed to the United States by the debtor. Such requests shall be made by the Departmental unit workout officials to the appropriate officials of the Office of Personnel Management (OPM) in accordance with their regulations and procedures.

(b) When making a request for administrative offset under paragraph (a) of the section, the responsible workout group debt collection official shall include a written certification that:

(1) The debtor owes the United States a debt, including the amount and basis for the debt;

(2) The Department has complied with all applicable statutes, regulations, and procedures of the Office of Personnel Management; and

(3) the Department has comply with the requirements of the applicable provisions of the Federal Claims Collection Standards, this agency's implementing regulations, including any required hearing or review.

(c) If a Departmental unit workout group decides to request administrative offset under paragraph (a) of this section, the responsible debt collection official should make the request as soon a practical after completion of the applicable due process procedures so the Office of Personnel Management may identify and "flag" the debtor's account in anticipation of the time when the debtor becomes eligible and requests to receive payments from the fund. This will satisfy any requirement that offset be initiated prior to expiration of the applicable statute of limitations. At such time as the debtor makes a claim for payments from the fund, and if at least a year has elapsed since the administrative offset request was originally made, the debtor should be permitted to offer a satisfactory repayment plan in lieu of offset upon establishing to the appropriate Departmental unit head (or designee) that changed financial circumstances would render the offset unjust.

(d) If the Department collects part or all of the debt by other means before deductions are made or completed under paragraph (a) of this section, the Department official responsible for collecting the debt will act promptly to modify or terminate the agency's request for administrative offset under paragraph (a) of this section.

(e) In accordance with procedures established by the Office of Personnel Management, the Department may request an offset from the Civil Service Retirement and Disability Fund prior to completion of due process procedures.

§ 21.18 Collection against a judgment.

Collection by administrative offset against a judgment obtained by a debtor against the United States shall be accomplished in accordance with 31 U.S.C. 3728.

§ 21.19 Liquidation of collateral.

If the Department holds security or collateral which may be liquidated through the exercise of a power of sale in the security instrument, or a nonjudicial foreclosure, liquidation should be accomplished by such procedures if the debtor fails to pay the debt within a 90-day period after demand, unless the cost of disposing of the collateral would be disproportionate to its value or special circumstances require judicial foreclosure. The Department collection official should provide the debtor with reasonable notice of the sale, an accounting of any surplus proceeds, and any other procedures required by contract or law. Collection from other sources, including liquidation of security or collateral, is not a prerequisite to requiring payment by a surety or insurance concern unless such action is expressly required by statute or contract.

§ 21.20 Collection in installments.

(a) Whenever feasible, and unless otherwise provided by law, debts owed the United States, together with the interest, penalties, and administrative costs should be collected in one lump sum. This true whether the debt is being collected by administrative offset or by another method, including voluntary payment. However, if the debtor is financially unable to pay the indebtedness in one lump sum, the responsible Departmental official(s) may accept repayment in regular installments (See § 21.6). Prior to approving such repayments, financial statements shall be required from the debtor who represents that he/she is unable to pay the debt in one lump sum. A responsible Departmental official who agrees to accept payment in regular installments should obtain a legally enforceable written agreement from the debtor which specifies all of the terms of the arrangement and which contains a provision accelerating the debt in the event the debtor defaults. The size and frequency of installment payments should bear a reasonable relationship to the size of the debt and the debtor's ability to pay. If possible, the installment payments should be sufficient in size and frequency to liquidate the Government's claim in not more then three years. Installment payments of less than $50 per month should be accepted only if justifiable on the grounds of financial hardship or for some other reasonable cause. If the debt is an unsecured claim for administrative collection, attempts should be made to obtain an executed confess-judgment note, comparable to the Department of Justice Form USA-70a, from a debtor when the total amount of the deferred installments will exceed $750. Such notes may be sought when an unsecured obligation of a lesser amount is involved. When attempting to obtain confess-judgment notes, departmental units should provide their debtors with written explanation of the consequences of signing the note, and should maintain documentation sufficient to demonstrate that the debtor has signed the note knowingly and voluntarily. Security for deferred payments other than a confess-judgment note may be accepted in appropriate cases. A departmental unit head (or designee) may accept installment payments notwithstanding the refusal of a debtor to execute a confess-judgment note or to give other security.

(b) If the debtor owes more than one debt and designates how a voluntary installment payment is to be applied as among those debts, that designation must be followed. If the debtor does not designate the application of the payment, the Department debt collection official should apply payments to the various debts in accordance with the best interests of the United States, as determined by the facts and circumstances of the particular case paying special attention to applicable statutes of limitations.

§ 21.21 Additional administrative collection action.

Nothing contained in this subpart is intended to preclude the utilization of any other administrative remedy which may be available.

Dated: May 16, 1986.

Sonya Stewart,

Director, Office of Finance and Federal Assistance.

[FR Doc. 86-11435 Filed 5-20-86; 8:45 am]

BILLING CODE 3510-FA-M

DEPARTMENT OF HEALTH AND HUMAN SERVICES

Social Security Administration

20 CFR Parts 404 and 416

[Regulations No. 4 and No. 16]

Social Security Benefits and Supplemental Security Income; Continued Payment of Benefits During Appeal

AGENCY: Social Security Administration, HHS.

ACTION: Proposed rule.

SUMMARY: These proposed regulations implement section 223(g) of the Social Security Act (the Act) as added by section 2 of Pub. L. 97-455 and amended by section 7 of the Social Security Disability Benefits Reform Act of 1984 (Pub. L. 98-460 enacted in October 1984). The proposed regulations also implement section 1631 of the Act, as amended by section 7 of Pub. L. 98-460. These statutory provisions provide that the Secretary of Health and Human Services shall by regulations prescribe the manner, form, and time limit within which an individual may elect continued payment of disability benefits pending the outcome of his or her appeal of a determination by SSA that his or her physical or mental impairment(s) for which benefits were payable has ceased, never existed, or is no longer disabling. These proposed regulations provide the rules for electing continuation of benefits under these statutory provisions.

Under these proposed regulations, the option to elect to continue receiving benefits pending the outcome of a request for reconsideration or hearing before an administrative law judge on a medical cessation will be provided to the following:

—Recipients of disability insurance benefits (and their auxiliary dependents receiving benefits on the recipient's wage record).

—Recipients of disabled adult child's benefits.

—Recipients of disabled widow's and disabled widower's benefits.

—Mothers and fathers having in care a disabled adult child.

—Mothers and fathers having in care a child, under age 18 but over age 15, who is disabled and receiving child's benefits.

—Recipients of SSI benefits based on disability or blindness.

DATE: Your comments will be considered if we receive them no later than July 21, 1986.

ADDRESSES: Comments should be submitted in writing to the Acting Commissioner of Social Security, Department of Health and Human Services, P.O. Box 1585, Baltimore, Maryland 21203. They may also be delivered to the Office of Regulations, Social Security Administration, 3-B-4 Operations Building, 6401 Security Boulevard, Baltimore, Maryland 21235 between 8:00 a.m. and 4:30 p.m. on regular business days. Comments received may be inspected during these same hours by making arrangements with the contact person shown below.

FOR FURTHER INFORMATION CONTACT: Lawrence V. Dudar, Legal Assistant, Office of Regulations, Social Security Administration, 6401 Security Boulevard, Baltimore, Maryland 21235, telephone 9301) 594-7459.

SUPPLEMENTARY INFORMATION: These proposed regulations would implement section 223(g) and 1631 as amended by section 7 of Pub. L. 98-460 which temporarily extends the title II benefit continuation provisions of prior laws and permanently creates a statutory benefit continuation provision for title XVI medical cessation cases.

Section 223(a)(1)(D) of the Act provides that a Social Security title II disability insurance beneficiary found to be no longer disabled under the provisions of the Act will receive benefits for two months after the month in which his or her disability is determined to have ceased. Similarly, section 202(d)(1)(G) of the Act provides that a title II disabled child beneficiary (as defined by the Act) found to be no longer disabled under the provisions of the Act will receive benefits for two months after the month in which his or her disability is determined to have ceased. The regulations at 20 CFR 404.900 give these title II beneficiaries the right to appeal a determination of medical cessation through the administrative process. Prior to Pub. L. 97-455, title II beneficiaries were not eligible for payment of continued benefits during an appeal of a decision that they were no longer medically disabled. However, if the initial cessation determination was reversed on appeal, benefits were paid retroactively to the first month for which benefits were not paid as a result of the determination of disability cessation.

Section 1631(a)(5) of the Act similarly provides that a title XVI recipient of disability or blindness benefits will receive benefits for two months after the month in which his or her disability is determined to have ceased. Recently revised regulations at 20 CFR 416.1413(d) (51 FR 288; January 3, 1986) implementing sections 4 and 5 of Pub. L. 97-455 provide for an opportunity for a disability hearing at the reconsideration level when title XVI and concurrent title II/XVI individuals appeal a determination, based on medical factors, that he or she is not disabled (a medical cessation). These individuals retain the right to appeal this reconsideration decision through a hearing before an administrative law judge.

Prior to the enactment of Pub. L. 98-460, benefit continuation was provided in title XVI and concurrent title II/title XVI cases based on the U.S. Supreme Court decision in *Goldberg v. Kelly* (1970). Current regulations at 20 CFR 416.1336 provide that title XVI recipients found to be no longer disabled or blind can have their benefits continued through the first step of appeal.

Section 2 of Pub. L. 97-455

Section 2 of Pub. L. 97-455, enacted in January 1983 added a new subsection to section 223 of the Act. Under this provision, a title II disability insurance beneficiary or a child, widow, or widower entitled to benefits based on disability, who receives a determination that the physical or mental impairment(s) on the basis of which such benefits are payable is found to have ceased, not to have existed, or to no longer be disabling may elect to have benefits continued during appeal of the cessation determination through the reconsideration level, and/or until a hearing decision or order of dismissal is issued by an administrative law judge. Section 2 of Pub. L. 97-455 also permits the beneficiary to elect continuation of any other benefits that are based on his or her wages and self-employment income, including benefits under title XVIII of the Act (Medicare). Any continued benefits paid under this provision, except for those made under title XVIII, are subject to recovery as overpayments, subject to the same waiver provisions in current law (section 204 of the Act) and regulations (20 CFR 404.501 *et. seq.*), where the medical cessation determination is upheld, on appeal, by the final decision of the Secretary. However, waiver of recovery of such an overpayment is considered only if the cessation determination was appealed in good faith.

This provision allows continued payment of benefits for months beginning in February 1983 for January 1983, or if later, the first month for which benefits were nc longer otherwise payable under the most recent medical cessation determination or order of remand.

This provision was originally effective for medical cessation determinations made after January 11, 1983 pending administrative review and prior to October 1, 1983. Continued benefits could only be paid through June 1984.

Section 2 of Pub. L. 98-118

This provision extended the sunset date of section 2 of Pub. L. 97-455 for continued payment of disability benefits during appeal to include medical cessation determinations made prior to December 7, 1983. However, payments still had to end with June 1984.

Section 7 of Pub. L. 98-460

This provision (which amends section 223(g)) extends the effective date of the provisions of Pub. L. 97-455 for title II cases to include determinations that the physical or mental impairment(s) on the basis of which such benefits are payable is found to have ceased, not to have existed or to no longer be disabling made prior to January 1, 1988. In no case can payments be made for months after June 1988. This provision also provides for the continuation of payment of benefits under title II and benefits under title XVIII to a father or mother who has in his or her care a child, over age 15, who is disabled and receiving child's benefits, based on such disability.

Section 7 of Pub. L. 98-460 also amends section 1631(a) of the Act to add a new paragraph (7). Under this provision, a recipient of supplemental security income benefits based on disability or blindness, who receives a determination that the physical or mental impairment(s) on the basis of which such benefits are payable is found to have ceased, not to have existed or to no longer be disabling may elect to have benefits continued during appeal of this determination. If elected, these benefits would be paid until the month before the month a decision is issued after an administrative law judge hearing or the month before the month no appeal for a review or hearing is pending, whichever is earlier. Supplemental security income benefits paid under this provision are subject to recovery as overpayments and to the waiver of recovery provisions pursuant to section 1631(b) of the Act if the initial

medical cessation determination is affirmed by a final decision of the Secretary. However, waiver of recovery of sch an overpayment will be considered only if the determination was appealed in good faith:

Proposed Regulatory Provisions

Title II

The proposed regulations at § 404.1597(b) explain that after we have made a determination that an individual's physical or mental impairment(s) has ceased, never existed, or is no longer disabling, the individual's title II benefits based on disability will be stopped. We will send the individual written notice of our determination that explains it, the right to appeal and the right to request continued benefits pending reconsideration and/or a hearing on the disability cessation determination.

For the purpose of the proposed regulations at § 404.1597(b) and § 404.1597a only, "benefits" means disability cash payments and/or Medicare, if applicable. "Election of benefits" means the election of disability cash payments and/or Medicare, if applicable.

Under these proposed regulations, title II individuals who receive a closed period of disability dtermination do not have the right to request continuation of benefits during appeal. A closed period of disability determination is a determination on an application for benefits that establishes a period of disability for only a specified period of time. In a closed period of disability, there is no determination of continuous entitlement. Since continuous entitlement has not been established, there is no issue ofmedical cessation. Also, under there proposed regulations, title II individuals who receive an unfavorable determination on their initial disability claim (that is their application for benefits based ondisability) do not have the right to request continuation of benefits during appeal since continued benefits are only available to claimants who were already receiving benefits.

The proposed regulations at § 404.1597a(a) and (b) explain that title II individuals who receive a medical cessation determination may elect to have benefits continued during appeal of that determination. Title II benefits may be continued only if the termination that the individual's physical or mental impairment(s) has ceased, has never existed, or is no longer disabling is made on or after January 12, 1983 (or before January 12, 1983 and a timely request for reconsideration or a hearing before an ALJ was pending on that date) and before January 1, 1988. If elected, title II benefits may be continued beginning with the month of Jaunary 1983 or the first month for which benefits are no longer otherwise payable following a medical cessation determination of the month of election, whichever is later.

The payments to a title II individual who has elected to have benefits continued will continue until the earlier of the month before the month a decision is issued after the ALJ hearing or the month before the month a new decision is issued by the ALJ (or final action by the Appeals Council on the ALJ's recommended decision) if the individual's case was sent back to an ALJ for further action, or until the month before the month no timely request is pending after notification of an unfavorable title II reconsideration determination, or June 1988.

The proposed regulations at § 404.1597a(c) explain that a title II beneficiary may also elect to have benefits continued for any title II auxiliary beneficiaries (e.g., eligible spouse or children) during this appeal. If elected, continued for the auxiliaries will be continued for the same time periods provided for the title II beneficiary. Under the proposed regulations, auxiliary beneficiaries may also elect whether they wish to receive continued payment of benefits, but the title II primary beneficiary must also elect to have their benefits continued in order for them to be paid. The right to also elect continued payment of benefits is given to title II auxiliary beneficiaries because these beneficiaries will be asked to repay any overpayment resulting from benefits continued pending the outcome of the appeal. Since the auxiliary beneficiaries may not be aware of the primary beneficiary's election of continued benefits on their behalf, they will be required to make a separate election to have their benefits continue.

The proposed regulations § 404.1597a(d) explain that we will notify the title II individual of his or her right to elect continued benefits if he or she requests reconsideration or a hearing on our disability cessation determination. If the individual requests reconsideration or a hearing, we will request a written statement of choice from the title II individual as to whether or not he or she wants benefits to continue during appeal, and whether or not he or she also wants title II benefits to continue to anyone else who is receiving benefits based on the title II individual's wages and self-employment income.

Title II beneficiaries may elect continuation of benefits at the time reconsideration is requested and again at the time a hearing before an administrative law judge is requested. In title II cases, a separate election must be made at each level of appeal.

If the title II beneficiary does not elect continuation of benefits at the time reconsideration is requested, but requests it at the time the administrative law judge hearing is requested, we will reinstate continued benefits effective with the month of the latest medical cessation determination rather than the first month of nonpayment after the initial medical cessation determination. The written statement of choice, which must be completed by the primary beneficiary, explains the provision.

The proposed regulations (§ 404.1597a(e)), explain that we also will contact the spouse and/or children of a title II individual, and obtain a statement in writing from them as to whether or not they wish to receive continued benefits. However, for the auxiliary beneficiaries (spouse or children) to receive continued benefits, the title II individual must also request that benefits be continued for them. Under these proposed regulations, title II auxiliary beneficiaries (spouse or children) who are living in a separate household and those in the same household will be asked to repay any overpayment resulting from benefits continued pending the outcome of the appeal. Since auxiliaries (spouse or children) may not be aware of the title II primary beneficiary's election of continued benefits on their behalf, these proposed regulations provide that a separate statement of choice to receive or not to receive continued benefits will also be required from auxiliary beneficiaries.

The proposed regulations § 404.1597a(f), (g), (h) and (i) explain that a title II individual must request continued benefits: (1) Within 10 days after he or she receives notice of our initial cessation determination along with requesting consideration of that initial determination (The 60-day period for requesting reconsideration is not affected by this provision.); (2) within 10 days after receiving notice of our reconsideration cessation determination along with requesting a hearing before an administrative law judge (The 60-day period for requesting a hearing is not affected by this provision.); or (3) within 10 days after receiving a notice of the option for continued benefits in connection with a decision (including court remand cases except those court remands which carry special benefit

continuation rights explained in section 2(e) of Pub. L. 98–460) that has been vacated and sent back (remanded) by the Appeals Council to an administrative law judge for further action.

Our experience with benefit continuation under Pub. L. 97–455 and 98–118, which utilized a 10-day time frame, showed that most eligible title II individuals made an election within the 10 days. Under these proposed regulations, these individuals are given the same period (10 days) for making such election. This 10-day time limit is consistent with longstanding title XVI continued payments policy based on *Goldberg* v. *Kelly*, 397 U.S. 254 (1970), principles.

If the election for continued benefits is requested after the 10-day period, we will use the standards in current regulations, 20 CFR 404.911, fo determine whether good cause exists for failing to request benefit continuation within the 10-day period. If the election for continued benefits is made after this 10-day period, continued benefits can only be paid if good cause is established for the delayed request. We apply a good cause exception with regard to other time limits in the appeals process. For consistency and recognizing that certain justifiable factors may prevent timely requests in this situation, we are using the same good cause considerations here.

The proposed regulations (§ 404.1597a(h)(2)) also explain that if the primary beneficiary requests continued title II benefits for a spouse or child, the spouse or child must also request continued benefits within 10 days after receipt of the notification of our determination. The standards in § 404.911 will be used to determine if good cause exists for the spouse's or child's request for continuation of benefits made after the 10-day period. We will consider their request to be timely and will pay the title II spouse or child continued benefits only if good cause for delay is found.

Under the proposed regulation (§ 404.1597a(i)), in decisions (including court remand cases except those court remands with special benefit continuation rights under section 2(e) of Pub. L. 98–460) vacated and sent back (remanded) by the Appeals Council to an administrative law judge for further action, benefit continuation is available effective with the first month of nonpayment based on the prior administrative law judge decision if benefits were previously elected at the administrative law judge level.

In such remanded cases, the prior administrative law judge's decision or dismissal order is vacated having no force or effect, and accordingly benefit continuation is again available for these title II beneficiaries. In these remanded cases, continued benefits will be reinstated without a new election if continued benefits were previously elected at the administrative law judge level. In these remanded cases reaching the administrative law judge, if the title II beneficiary did not previously elect benefit continuation at the administrative law judge level, continuation of benefits is available upon a new election by the beneficiary and effective for the month of the Appeals Council remand order.

If benefit continuation was previously elected at the administrative law judge level, we will automatically reinstate these same continued benefits and then update our records regarding events that may affect the right to receive benefits. If any of these events have occurred, then continued benefits will be stopped or adjusted accordingly. If benefit continuation was not previously elected at the administrative law judge level, we will verify whether all requirements are met before paying title II continued benefits. This updating of our records before payment is necessary because benefit continuation is intended to replace only those benefits received prior to the medical cessatoin, i.e., benefits for only those individuals who were entitled at the time of the cessation. If any events that may affect the right to receive benefits have occurred, then necessary adjustments to the benefits will be made before reinstatement. The individual who did not previously elect benefit continuation did not have to report any of these events to us, since they were not receiving any benefits.

The proposed regulations (§ 404.1597a(j)) explain that any title II continued benefits received during appeal (with the exception of Medicare benefits) are subject to the overpayment recovery and waiver provisions of Regulations 20 CFR Part 404, Subpart F, if the determination that the title II individual is no longer disabled is not changed by the final decision of the Secretary. The title II individuals who received continued benefits would then be asked to pay back these benefits. However, recovery of the continued benefits would be subject to the waiver provisions of Regulations at 20 CFR Part 404, Subpart F, only if the appeal was made in good faith. We will assume that an appeal was made in good faith unless an individual fails to cooperate in connection with an appeal, e.g., if he or she fails (without a good reason) to give us medical or other evidence, or to go for a physical or mental examination when requested.

If an individual has an appeal on a medical cessation pending under both title II and title XVI (that is, a concurrent claim), the title II portion will be handled in accordance with the title II proposed regulations, while the title XVI portion will be handled in accordance with the title XVI proposed regulations.

Title XVI

The proposed regulations at § 416.995 explain that after we have made a determination that an individual's physical or mental impairment(s) has ceased, never existed, or is no longer disabling, the individual's title XVI benefits based on disability or blindness will be stopped. We will send the title XVI individual written notice of our determination that explains it, the right to appeal and the right to request continued benefits pending reconsideration and/or a hearing on the disability cessation determination.

Under these proposed regulations, title XVI individuals who receive a determination on their application for benefits based on disability or blindness that they were disabled or blind for only a specified period of time (i.e., a closed period) do not have the right to request continuation of benefits during appeal. When disability has been established for only a specified period of time, there is no determination of continuous eligibility. Since continuous eligibility has not been established, there is no issue of medical cessation. Also, under these proposed regulations, title XVI individuals who receive an unfavorable determination on their initial disability or blindness claim (that is their application for benefits based on disability or blindness) do not have the right to request continuation of benefits during appeal since continued benefits ar only available to claimants who were already receiving benefits.

The proposed regulations at § 416.996(a) explain that title XVI individuals who receive a medical cessation determination may elect to have benefits continued during appeal of that determination. This provision applies to determinations that the individual's physical or mental impairment(s) has ceased, has never existed, or is no longer disabling made after October 1984. The payments to a title XVI individual who has elected to have benefits continued will continue until the earlier of the month before the month a decision is issued after the administrative law judge hearing or the month before the month a new decision

is issued by the ALJ (or final action by the Appeals Council in the ALJ's recommended decision) if the individual's case was sent back to an ALJ for further action, or until the month before the month no timely request for reconsideration or a hearing before an administrative law judge is pending after notification of an unfavorable title XVI initial or reconsideration cessation determination.

Regulations at 20 CFR 416.1413(d), (51 FR 288; January 3, 1986) which are effective for title XVI determinations made after January 3, 1986 provide a title XVI beneficiary an opportunity for a disability hearing at the reconsideration level when the beneficiary appeals an initial medical cessation determination. Before January 3, 1986, the first level of appeal for title XVI medical cessations was a hearing before an administrative law judge. The disability hearing regulations result in similar treatment of title II and title XVI beneficiaries in the appeals process, including the payment of continued benefits.

Individuals electing continuation of title XVI benefits, in States where Medicaid eligibility is based on receipt of title XVI benefits and for which SSA does Medicaid eligibility determinations, will also have Medicaid eligibility continued. In other States, they will be referred to the State Medicaid agency.

The proposed regulations at § 416.996(b) explain that we will notify the title XVI individual of his or her right to elect continued benefits if he or she requests a reconsideration or hearing before an administrative law judge on our disability cessation determination. If the individual requests a reconsideration or hearing, we will request a written statement of election as to whether or not he or she wants benefits to continue during appeal.

Title XVI individuals may elect continuation of benefits at the time reconsideration is requested and again at the time a hearing before an administrative law judge is requested. A separate election must be made at each level of appeal.

If the title XVI individual does not elect continuation of benefits at the time reconsideration is requested, but requests it at the time the administrative law judge hearing is requested, we will reinstate continued benefits effective with the month of the latest medical cessation determination rather than the first month of nonpayment after the initial medical cessation determination. The written statement of choice, which must be completed by the individual, explains this provision.

The proposed regulations at § 416.996(c) explain that a title XVI individual must request continued benefits within 10 days after receiving notice of an initial medical cessation determination along with requesting a reconsideration. The 60-day period for requesting a reconsideration is not affected by this provision.

The new section 1631(a)(7) of the Act, as added by section 7 of Pub. L. 98–460, requires that title XVI individuals now make an affirmative request to have benefits continued. The existing title XVI regulation (20 CFR 416.1336(b) which is based on the U.S. Supreme Court decision in the case of *Goldberg* v. *Kelly*, 397 U.S. 254 (1970), provides that title XVI benefits would continue to be paid until a decision (or order of dismissal) was issued at the initial level of appeal if the appeal is filed within 10 days after receipt of notice of planned action to stop benefits. The new statutory authority for title XVI benefit continuation differs from the *Goldberg* v. *Kelly* approach by requiring that the individual affirmatively elect benefit continuation rather than assuming that the individual wants continued benefits if a hearing is requested within 10 days unless sucn benefits are waived. Under these proposed regulations, title XVI individuals are given the same period (per current regulations) of 10 days for making such election.

Our experience with providing the 10-day time frame for filing a request for hearing and receiving benefit continuation in title XVI cases undr the *Goldberg* v. *Kelly* procedures, which has been in effect since 1974, has proven that this is an adequate time frame for most all individuals.

The proposed title XVI regulations § 416.996(c) also explain that if continued benefits are requested after the 10-day period, we will use the standards in current regulations, 20 CFR 416.1411, to determine whether good cause exists for failing to request benefit continuation within the 10-day period. If the election for continued benefits is made late, we will consider the request to be timely and will pay continued benefits only if good cause for delay is found. We apply a good cause exception with regard to other time limits in the appeals process. For consistency and recognizing that certain justifiable factors may prevent timely requests in this situation, we are using the same good cause considerations here.

The proposed regulations § 416.996(d), explain that a title XVI individual must request continued benefits within 10 days after receiving notice of our reconsideration cessation determination along with requesting a hearing before an administrative law judge. The 60-day period for requesting a hearing is not affected by this provision.

If the request for continued benefits is made after the 10-day period, we will use the standards in current regulations, 20 CFR 416.1411, to determine whether good cause exists for failing to request benefit continuation timely. If the election for continued benefits is made late, we will consider the request to bet timely only if good cause for delay is found.

The proposed regulations at § 416.996(e) explain that in title XVI decisions (including court remand cases, except those court remands with special benefit continuation rights under section 2(e) of Pub. L. 98–460) vacated and sent back (remanded) by the Appeals Council to an administrative law judge for further action, benefits continuation may be available, without a new election, effective with the first month of nonpayment based on the prior administrative law judge decision if benefits were previously elected at the administrative law judge level. In such title XVI remanded cases, the prior administrative law judge's decision or dismissal order is vacated having no force or effect, and accordingly benefit continuation may be available again for these title XVI beneficiaries.

If the title XVI beneficiary did not previously elect benefit continuation at the administrative law judge level, continuation of benefits may be available upon a new election by the beneficiary and effective for the month of the Appeals Council remand order.

Before reinstating benefits in any remand case (including court remand cases, except those court remands with special benefit continuation rights under section 2(e) of Pub. L. 98–460), we will contact the title XVI individual to update our records regarding events that affect the right to receive, and the amount of, benefits, such as work activity, living arrangements, and income and resources. Before reinstatement, we will review and redetermine eligibility in all cases, whether or not benefits were previously elected at the administrative law judge level. This policy to do a redetermination before reinstatement is consistent with our responsibility to redetermine eligiblity contained in section 1611(c)(1) of the Social Security Act and the regulations at 20 CFR 416.204. The redetermination is necessary because we have not had recent contact with the individual during the period of nonpayment since the individual was not under any obligation to report changes in circumstances that

could affect eligibility or payment amount. Since the title XVI program is a program based on current needs, it is essential that a determination be made that the individual's current needs support the payment, as well as the amount, of title XVI benefits. Upon redetermination, if all eligibility factors are not met (other than disability or blindness or in certain cases, not engaging in substantial gainful activity), we will not reinstate benefits. Any retroactive continued benefits paid to concurrent title II and title XVI beneficiaries will be subject to the provisions of section 1127 of the Social Security Act, as amended. That section provides that, effective February 1985, benefits paid after a period of suspension or termination will be adjusted to reflect the title XVI benefits that would not be paid if the title II benefits were paid when due.

Prior to November 1984, in concurrent title II/title XVI medical cessation cases, under the provisions in 20 CFR 416.1336, an individual who had filed for a hearing within 10 days of receipt of the cessation notice, could waive his or her right to receive continued benefits pending the hearing decision. He or she could also restrict this waiver to either title II or title XVI benefits only. Therefore the claimant could continue to receive benefits under both titles or choose to receive benefits under only one title. This policy will be continued under these proposed regulations.

The proposed regulations at § 416.996(f) explain that any continued title XVI benefits received during appeal are subject to the overpayment recovery and waiver provisions of Regulations 20 CFR Part 416, Subpart E, if the determination that the title XVI individual is no longer disabled or blind is not changed by the final decision of the Secretary. The title XVI individuals who received continued benefits would then be asked to pay back these benefits. However, the continued benefits would be subject to the waiver provisions of Regulations 20 CFR Part 416, Subpart E, only if the appeal was made in good faith. We will assume that an appeal was made in good faith unless an individual fails to cooperate in connection with an appeal, e.g., if he or she fails (without a good reason) to give us medical or other evidence, or to go for a physical or mental examination when requested.

If an individual has an appeal on a medical cessation pending under both title XVI and title II (that is, concurrent claim), the title XVI portion will be handled in accordance with the title XVI proposed regulations while the title II portion will be handled in accordance with the title II proposed regulations.

Conforming changes will be made later in 20 CFR 416.1336 and 20 CFR 416.1415.

Regulatory Procedures

Executive Order 12291—The Secretary has determined that this is not a major rule under E.O. 12291. Therefore, a regulatory impact analysis is not required.

Paperwork Reduction Act—These proposed regulations impose no additional reporting or recordkeeping requirements requiring OMB clearance.

Regulatory Flexibility Act—We certify that these regulations will not have a significant economic impact on a substantial number of small entities since they primarily affect disability claimants. Therefore, a regulatory flexibility analysis as provided in Pub. L. 96-354, the Regulatory Flexibility Act, is not required.

List of Subjects

20 CFR Part 404

Administrative practice and procedure, Death benefits, Disability benefits, Old-age, survivors and disability insurance.

20 CFR Part 416

Administrative practice and procedure, Aged, Blind, Disability benefits, Public assistance program, Supplemental Security Income (SSI).

Dated: October 24, 1985.

Martha A. McSteen,

Acting Commissioner of Social Security.

Approved: December 26, 1985.

Otis R. Bowen,

Secretary of Health and Human Services.

Part 404 of 20 CFR is amended as follows:

1. The authority citation for Supart P of Part 404 is revised to read as follows:

Authority: Secs. 205, 223, and 1102 of the Social Security Act, as amended 53 Stat. 1368, as amended, 70 Stat. 815, as amended, 49 Stat. 647, as amended: 42 U.S.C. 405, 423, and 1302.

2. In Part 404, Subpart P, the existing § 404.1597 is redesignated paragraph (a) *General* and a new paragraph (b) is added to read as follows:

§ 404.1597 After we make a determination that you are not now disabled.

* * * * *

(b) *If we make a determination that your physical or mental impairment(s) has ceased, did not exist, or is no longer disabling (Medical Cessation Determination).* If we make a determination that the physical or mental impairment(s) on the basis of which benefits were payable has ceased, did not exist, or is no longer disabling (a medical cessation determination), your benefits will stop. As described in paragraph (a) of this section, you will receive a written notice explaining this determination and the month your benefits will stop. The written notice will also explain your right to appeal if you disagree with our determination and your right to request that your benefits and the benefits, if any, of your spouse or children, be continued under § 404.1597a. For the purpose of this section, "benefits" means disability cash payments and/or Medicare, if applicable. The continued benefit provisions of this section do not apply to an initial determination on an application for disability benefits, or to a determination that you were disabled only for a specified period of time.

3. In part 404, Subpart P, a new § 404.1597a is added to read as follows:

§ 404.1597a Continued benefits pending appeal of a medical cessation determination.

(a) *General.* If we determine that you are not entitled to benefits because the physical or mental impairment(s) on the basis of which such benefits were payable is found to have ceased, not to have existed, or to no longer be disabling, and you appeal that determination, you may choose to have your benefits continued pending reconsideration and/or a hearing before an administrative law judge on the disability cessation determination. For the purpose of this entire section, the election of "continued benefits" means the election of disability cash payments and/or Medicare, if applicable. You can also choose to have the benefits continued for anyone else receiving benefits based on your wages and self-employment income (and anyone else receiving benefits because of your entitlement to benefits based on disability).

(b) *The provisions of this section are available for a limited time only.* (1) Benefits may be continued under this section only if the determination that your physical or mental impairment(s) has ceased, has never existed, or is no longer disabling is made on or after January 12, 1983 (on before January 12, 1983, and a timely request for reconsideration or a hearing before an administrative law judge is pending on that date), and before January 1, 1988.

(2) Benefits may be continued under this section only for months beginning with January 1983, or the first month for which benefits are no longer otherwise

payable following our determination that your physical or mental impairments(s) has ceased, has never existed, or is no longer disabling, whichever is later.

(3) Continued payment of benefits under this section will stop effective with the earlier of:

(i) The month before the month in which an administrative law judge's hearing decision finds that your physical or mental impairment(s) has ceased, has never existed, or is no longer disabling or the month before the month of a new administrative law judge decision (or final action by the Appeal Council on the administrative law judge's recommended decision if your case was sent back to an administrative law judge is pending; or

(iii) June 1988.

(c) *Continuation of benefits for anyone else pending your appeal.* (1) When you file a request for reconsideration or hearing before an administrative law judge on your determination that your physical or mental impairment(s) has ceased, has never existed, or is no longer disabling, or your case has been sent back (remanded) to an administrative law judge for further action, you may also choose to have benefits continue for anyone else who is receiving benefits based on your wages and self-employment income (and for anyone else receiving benefits because of your entitlement to benefits based on disability), pending the outcome of your appeal.

(2) If anyone else is receiving benefits based on your wages and self-employment income, we will notify him or her of the right to choose to have his or her benefits continue pending the outcome of your appeal. Such benefits can be continued for the time period in paragraph (b) of this section only if he or she chooses to have benefits continued and you also choose to have to have his or her benefits continued.

(d) *Statement of choice.* When you or another party request reconsideration under § 404.908(a) or a hearing before an administrative law judge under § 404.932(a) on our determination that your physical or mental impairment(s) has ceased, has never existed, or is no longer disabling, or if your case is sent back (remanded) to an administrative law judge for further action, we will explain your right to receive continued benefits and ask you to complete a statement specifying which benefits you wish to have continued pending the outcome of the reconsideration or hearing before an administrative law judge. You may elect to receive only Medicare benefits during appeal even if you do not want to receive continued disability benefits. If anyone else is receiving benefits based on your wages and self-employment income (or because of your entitlement to benefits based on disability), we will ask you to complete a statement specifying which benefits you wish to have continued for them, pending the outcome of the request for reconsideration or hearing before an administrative law judge. If you request appeal but you do not want to receive continued benefits, we will ask you to complete a statement declining continued benefits indicating that you do not want to have your benefits and those of your family, if any, continued during the appeal.

(e) *Your spouse's or children's statement of choice.* If you request, in accordance with paragraph (d) of this section, that benefits also be continued for anyone who had been receiving benefits based on your wages and self-employment, we will send them a written notice. The notice will explain their rights and ask them to complete a statement either declining continuing benefits, or specifying which benefits they wish to have continued, pending the outcome of the request for reconsideration or a hearing before an administrative law judge.

(f) *What you must do to receive continued benefits pending notice of our reconsideration determination.* (1) If you want to receive continued benefits pending the outcome of your request for reconsideration, you must request reconsideration and continuation of benefits no later than 10 days after the date you receive the notice of our initial determination that your physical or mental impairment(s) has ceased, has never existed, or is no longer disabling. Reconsideration must be requested as provided in § 404.909, and you must request continued benefits using a statement in accordance with paragraph (d) of this section.

(2) If you fail to request reconsideration and continued benefits within the 10-day period required by paragraph (f)(1) of this section, but later ask that we continue your benefits pending a reconsidered determination, we will use the rules in § 404.911 to determine whether good cause exists for your failing to request benefit continuation within 10 days after receipt of the notice of the initial cessation determination. If you request continued benefits after the 10-day period, we will consider the request to be timely and will pay continued benefits only if good cause for delay is established.

(g) *What you must do to receive continued benefits pending an administrative law judge's decision.* (1) To receive continued benefits pending an administrative law judge's decision on our reconsideration determination, you must request a hearing and continuation of benefits no later than 10 days after the date you receive the notice of our reconsideration determination that your physical or mental impairment(s) has ceased, has never existed, or is no longer disabling. A hearing must be requested as provided in § 404.933, and you must request continued benefits using a statement in accordance with paragraph (d) of this section.

(2) If you request continued benefits pending an administrative law judge's decision but did not request continued benefits while we were reconsidering the initial cessation determination, your benefits will begin effective the month of the reconsideration determination.

(3) If you fail to request continued payment of benefits within the 10-day period required by paragraph (g)(1) of this section, but you later ask that we continue your benefits pending an administrative law judge's decision on our reconsidered determination, we will use the rules as provided in § 404.911 to determine whether good cause exists for your failing to request benefit continuation within 10 days after receipt of the reconsideration determination. If you request continued benefits after the 10-day period, we will consider the request to be timely and will pay continued benefits only if good cause for delay is established.

(h) *What anyone else must do to receive continued benefits pending our reconsideration determination or an administrative law judge's decision.* (1) When you or another party (see § 404.908(a) and 404.932(a)) request a reconsideration or a hearing before an administrative law judge on our medical cessation determination or when your case is sent back (remanded) to an administrative law judge for further action, you may choose to have benefits continue for anyone else who is receiving benefits based on your wages and self-employment income. An eligible individual must also choose whether or not to have his or her benefits continue pending your appeal by completing a separate statement of election as described in paragraph (e) of this section.

(2) He or she must request continuation of benefits no later than 10 days after the date he or she receives notice of termination of benefits. He or she will then receive continued benefits beginning with the later of January 1983, or the first month for which benefits are no longer otherwise payable following

our initial or reconsideration determination that your physical or mental impairment(s) has ceased, has never existed, or is no longer disabling. Continued benefits will continue until the earlier of:

(i) The month before the month in which an administrative law judge's hearing decision finds that your physical or mental impairment(s) has ceased, has never existed, or is no longer disabling or the month of the new administrative law judge decision (or final action by the Appeals Council on the administrative law judge's recommended decision if your case was sent back to an administrative law judge for further action); or

(ii) The month before the month no timely request for a reconsideration or a hearing before an administrative law judge is pending; or

(iii) June 1988.

(3) If he or she fails to request continuation of benefits within the 10-day period required by this paragraph, but requests continuation of benefits at a later date, we will use the rules as provided in § 404.911 to determine whether good cause exists for his or her failure to request continuation of benefits within 10 days after receipt of the notice of termination of his or her benefits. His or her late request will be considered to be timely and we will pay him or her continued benefits only if good cause for delay is established.

(4) If you choose not to have benefits continued for anyone else who is receiving benefits based on your wages and self-employment income, pending the appeal on our determination, we will not continue benefits to him or her.

(i) *What you must do when your case is remanded to an administrative law judge.* If we send back (remand) your case to an administrative law judge for further action under the rules provided in § 404.977, and the administrative law judge's decision or dismissal order issued on your medical cessation appeal is vacated and is no longer in effect, continued benefits are payable pending a new decision by the administrative law judge or final action by the Appeals Council on the administrative law judge's recommended decision.

(1) If you (and anyone else receiving benefits based on your wages and self-employment income or because of your disability) previously elected to receive continued benefits pending the administrative law judge's decision, we will automatically start these same continued benefits again. We will send you a notice telling you this, and that you do not have to do anything to have these same benefits continued until the month before the month the new decision or order of dismissal is issued by the administrative law judge or until the month before the month the Appeals Council takes final action on the administrative law judge's recommended decision. These benefits will begin again with the first month of nonpayment based on the prior administrative law judge hearing decision or dismissal order. Our notice explaining reinstatement of continued benefits will also tell you to report to us any changes or events that affect your receipt of benefits.

(2) After we automatically reinstate your continued benefits as described in paragraph (h)(1) of this section, we will contact you to determine if any adjustment is required to the amount of continued benefits payable due to events that affect the right to receive benefits involving you, your spouse and/or children. If you have returned to work, we will request additional information about this work activity. If you are working, your continued benefits will not be stopped while your appeal of the medical cessation of disability is still pending unless you have completed a trial work period and are engaging in substantial gainful activity. In this event, we will suspend your continued benefits. If any other changes have occurred which would require a reduction in benefit amounts, or nonpayment of benefits, we will send an advance notice to advise of any adverse change before the adjustment action is taken. The notice will also advise you of the right to explain why these benefits should not be adjusted or stopped. You will also receive a written notice of our determination. The notice will also explain your right to reconsideration if you disagree with this determination.

(3) If the final decision on your appeal of your medical cessation is a favorable one, we will send you a written notice in which we will advise you of your right to benefits, if any, before you engaged in substantial gainful activity and to reentitlement should you stop performing substantial gainful activity. If you disagree with our determination, you will have the right to appeal this decision.

(4) If the final decision on your appeal of your medical cessation is an unfavorable one (the cessation is affirmed), you will also be sent a written notice advising you of our determination, and your right to appeal if you think we are wrong. The notice you receive will also contain information regarding overpayments in accord with § 404.1597(j).

(5) If you (or the others receiving benefits based on your wages and self-employment income or because of your disability) did not previously elect to have benefits continued pending an administrative law judge decision, and you now want to elect continued benefits, you must request to do so no later than 10 days after you receive our notice telling you about continued benefits. If you make this new election, benefits may begin with the month of the order sending (remanding) your case back to the administrative law judge. Before we begin to pay you continued benefits as described in paragraph (h)(1) of this section we will contact you to determine if any adjustment is required to the amount of continued benefits payable due to events which may affect your right to benefits. If you have returned to work, we will request additional information about this work activity. If you are working continued benefits may be started and will not be stopped because of your work while your appeal of the medical cessation of your disability is still pending unless you have completed a trial work period and are engaging in substantial gainful activity. If any changes have occurred which establish a basis for not paying continued benefits or a reduction in benefit amount, we will send you a notice explaining the adjustment or the reason why we cannot pay continued benefits. The notice will also explain your right to reconsideration if you disagree with this determination. If the final decision on your appeal of your medical cessation is a favorable one, we will send you a written notice in which we will advise you of your right to benefits, if any, before you engaged in substantial gainful activity and to reentitlement should you stop performing substantial gainful activity. If you disagree with our determination, you will have the right to appeal this decision. If the final decision on your appeal of your medical cessation is an unfavorable one (the cessation is affirmed), you will also be sent a written notice advising you of our determination, and your right to appeal if you think we are wrong. The notice you receive will also contain information regarding overpayments in accordance with paragraph (j) of this section.

(6) If a court orders that your case be sent back (remanded) to the Appeals Council, which subsequently remands your case to an administrative law judge for further action under the rules provided in § 404.983, the administrative law judge's decision or dismissal order on your medical cessation appeal is vacated and is no longer in effect. Continued benefits are payable to you

and anyone else receiving benefits based on your wages and self-employment income or because of your disability pending a new decision by the administrative law judge or final action by the Appeals Council on the administrative law judge's recommended decision. In these court-remanded cases reaching the administrative law judge, we will follow the same rules provided in paragraphs (i)(1), (2), (3), (4) and (5) of this section.

(j) *Responsibility to pay back continued benefits.* (1) You will be asked to pay back any continued benefits you receive if our determination that your physical or mental impairment(s) has ceased, has never existed, or is no longer disabling is not changed by the final decision of the Secretary. However, you will have the right to ask that you not be required to pay back the benefits as described in the overpayment recovery and waiver provisions of Subpart F of this Part. You will not be asked to pay back any Medicare benefits you received during the appeal.

(2) Anyone else receiving benefits based on your wages and self-employment income (or because of your disability) will be asked to pay back any continued benefits he or she received if the determination that your physical or mental impairment(s) has ceased, has never existed, or is no longer disabling, is not changed by the final decision of the Secretary. However, he or she will have the right to ask that he or she not be required to pay them back, as described in the overpayment recovery and waiver provisions of Subpart F of this Part. He or she will not be asked to pay back any Medicare benefits he or she received during the appeal.

(3) Waiver of recovery of an overpayment resulting from the continued benefits paid to you or anyone else receiving benefits based on your wages and self-employment income (or because of your disability) may be considered as long as the determination was appealed in good faith. It will be assumed that such appeal is made in good faith and, therefore, any overpaid individual has the right to waiver consideration unless such individual fails to cooperate in connection with the appeal, e.g., if the individual fails (without good reason) to give us medical or other evidence we request, or to go for a physical or mental examination when requested by us, in connection with the appeal.

Part 416 of 20 CFR is amended as follows:

1. The authority citation for Subpart I of Part 416 is revised to read as follows:

Authority: Secs. 1102, 1601, 1602, 1614 and 1631 of the Social Security Act, as amended; 86 Stat. 1471, as amended by 88 Stat. 52, 86 Stat. 1475; 49 Stat. 647, as amended: 42 U.S.C. 1302, 1382c, and 1383.

2. In Part 416, Subpart I, a new § 416.995 is added to read as follows:

§ 416.995 If we make a determination that your physical or mental impairment(s) has ceased, did not exist or is no longer disabling, (Medical Cessation Determination).

If we make a determination that the physical or mental impairment(s) on the basis of which benefits were payable has ceased, did not exist or is no longer disabling (a medical cessation determination), your benefits will stop. You will receive a written notice explaining this determination and the month your benefits will stop. The written notice will also explain your right to appeal if you disagree with our determination and your right to request that your benefits be continued under § 416.996. The continued benefit provisions of this section do not apply to an initial determination on an application for disability benefits or to a determination that you were disabled only for a specified period of time.

3. In Part 416, Subpart I, a new § 416.996 is added to read as follows:

§ 416.996 Continued benefits pending appeal of a medical cessation determination.

(a) *General.* If we determine that you are not eligible for benefits because the physical or mental impairment(s) on the basis of which such benefits were payable is found to have ceased, not to have existed, or is no longer disabling, and you appeal that determination, you may choose to have your benefits continued pending reconsideration and/or a hearing before an administrative law judge on the disability cessation determination.

(1) Benefits may be continued under this section only if the determination that your physical or mental impairment(s) has ceased, has never existed, or is no longer disabling is made after October 1984.

(2) Continued benefits under this section will stop effective with the earlier of:

(i) The month before the month in which an administrative law judge's hearing decision finds that your physical or mental impairment(s) has ceased, has never existed, or is no longer disabling or the month before the month of a new administrative law judge decision (or final action by the Appeals Council on the administrative law judge's recommended decision if your case was sent back to an administrative law judge for further action); or

(ii) The month before the month in which no timely request for reconsideration of administrative law judge hearing is pending after notification of our initial or reconsideration cessation determination. These benefits may be stopped or adjusted because of any events (such as work activity, change in income or resources or your living arrangements) which may occur while you are receiving these continued benefits, in accordance with § 416.1336(b).

(b) *Statement of choice.* If you or another party (see § 416.1432(a)) request reconsideration under § 416.1409 or a hearing before an administrative law judge in accordance with § 416.1433 on our determination that your physical or mental impairment(s) has ceased, has never existed, or is no longer disabling, or if your case is sent back (remanded) to an administrative law judge for further action, we will explain your right to receive continued benefits and ask you to complete a statement indicating that you wish to have benefits continued pending the outcome of the reconsideration or administrative law judge hearing. If you request reconsideration and/or hearing but you do not want to receive continued benefits, we will ask you to complete a statement declining continued benefits indicating that you do not want to have your benefits continued during the appeal. A separate election must be made at each level of appeal.

(c) *What you must do to receive continued benefits pending notice of our reconsideration determination.* (1) If you want to receive continued benefits pending the outcome of your request for reconsideration, you must request reconsideration and continuation of benefits no later than 10 days after the date you receive the notice of our initial determination that your physical or mental impairment(s) has ceased, has never existed, or is no longer disabling. Reconsideration must be requested as provided in § 416.1409, and you must request continued benefits using a statement in accordance with paragraph (b) of this section.

(2) If you fail to request reconsideration and continued benefits within the 10-day period required by paragraph (c)(1) of this section, but later ask that we continue your benefits pending a reconsidered determination, we will use the rules in § 416.1411 to determine whether good cause exists for your failing to request benefit continuation within 10 days after receipt

of the notice of the initial cessation determination. If you request continued benefits after the 10-day period, we will consider the request to be timely and will pay continued benefits only if good cause for delay is established.

(d) *What you must do to receive continued benefits pending an administrative law judge hearing decision.* (1) To receive continued benefits pending an administrative law judge's decision on our reconsideration determination, you must request a hearing and continuation of benefits no later than 10 days after the date you receive the notice of our reconsideration determination that your physical or mental impairment(s) has ceased, has never existed, or is no longer disabling. A hearing must be requested as provided in § 416.1433, and you must request continued benefits using a statement in accordance with paragraph (b) of this section.

(2) If you fail to request a hearing and continued benefits within the 10-day period required under paragraph (d)(1) of this section, but you later ask that we continue your benefits pending an administrative law judge's decision we will use the rules as provided in § 416.1411 to determine whether good cause exists for your failing to request benefit continuation within 10 days after receipt of the reconsideration determination. If you request continued benefits after the 10-day period, we will consider the delayed request to be timely and will pay continued benefits only if good cause for delay is established.

(e) *What you must do when your case is remanded to an administrative law judge.* If we send back (remand) your case to an administrative law judge for further action under the rules provided in § 416.1477, and the administrative law judge's decision or dismissal order issued on your medical cessation appeal is vacated and is no longer in effect, and you may be eligible for continued benefits, pending a new decision by the administrative law judge or final action by the Appeals Council on the administrative law judge's recommended decision.

(1) When your case is remanded to an administrative law judge, and you have elected to receive continued benefits, we will contact you to update our file to verify that you continue to meet the nonmedical requirements to receive benefits based on disability or blindness. To determine your correct payment amount, we will ask you to provide information such as any changes in work activity, living arrangements, and income and resources since our last contact with you. If you have returned to work, we will request additional information about this work activity. Unless your earnings cause your income to be too much to receive benefits, your continued benefits will be paid while your appeal of the medical cessation of your disability is still pending, unless you have completed a trial work period and are engaging in substantial gainful activity. If you have completed a trial work period and previously received continued benefits, you may still be eligible for special benefits under § 416.261. If we determine that you no longer meet a requirement to receive benefits, we will send you a written notice. The written notice will explain why your continued benefits will not be reinstated or will be for an amount less than you received before the prior administrative law judge's decision. The notice will also explain your right to reconsideration under § 416.1407, if you disagree. If you request a reconsideration, you will have the chance to explain why you believe your benefits should be reinstated or should be at a higher amount. If the final decision on your appeal of your medical cessation is a favorable one, we will send you a written notice in which we will advise you of any right to reentitlement should you stop performing substantial gainful activity. If you disagree with our determination, you will have the right to appeal this decision.

(2) After we verify that you meet all the nonmedical requirements to receive benefits as stated in paragraph (e)(1) of this section, and if you previously elected to receive continued benefits pending the administrative law judge's decision, we will start continued benefits again. We will send you a notice telling you this. You do not have to complete a request to have these same benefits continued through the month before the month the new decision or order of dismissal is issued by the administrative law judge or through the month before the month the Appeals Council takes final action on the administrative law judge's recommended decision. These continued benefits will begin again with the first month of nonpayment based on the prior administrative law judge hearing decision or dismissal order. Our notice explaining continued benefits will also tell you to report to us any changes or events that affect your receipt of benefits.

(3) When your case is remanded to an administrative law judge, and if you did not previously elect to have benefits continued pending an administrative law judge decision, we will send you a notice telling you that if you want to change that election, you must request to do so no later than 10 days after you receive our notice. If you do make this new election, and after we verify that you meet all the nonmedical requirements as explained in paragraph (e)(1) of this section, benefits will begin with the month of the Appeals Council remand order and will continue as stated in paragraph (e)(2) of this section.

(4) If a court orders that your case be sent back (remanded) to the Appeals Council which subsequently remands your case to an administrative law judge for further action under the rules provided in § 416.1483, the administrative law judge's decision or dismissal order on your medical cessation appeal is vacated and is no longer in effect. You may be eligible for continued benefits pending a new decision by the administrative law judge or final action by the Appeals Council on the administrative law judge's recommended decision. In these court-remanded cases reaching the administrative law judge, we will follow the same rules provided in paragraphs (e)(1), (2), and (3) of this section.

(f) *Responsibility to pay back continued benefits.* (1) You will be asked to pay back any continued benefits you receive if our determination that your physical or mental impairment(s) has ceased, has never existed, or is no longer disabling is not changed by the final decision of the Secretary. However, you will have the right to ask that you not be required to pay back the benefits as described in the overpayment recovery and waiver provisions of Subpart E of this Part.

(2) Waiver of recovery of an overpayment resulting from continued benefits to you may be considered as long as the cessation determination was appealed in good faith. We will assume that your appeal was made in good faith and, therefore, you have the right to waiver consideration unless you fail to cooperate in connection with the appeal, e.g., if you fail (without good reason) to give us medical or other evidence we request, or to go for a physical or mental examination when requested, in connection with the appeal.

[FR Doc. 86-11449 Filed 5-20-86; 8:45 am]

BILLING CODE 4190-11-M

DEPARTMENT OF THE INTERIOR

Office of Surface Mining Reclamation and Enforcement

30 CFR Part 950

Public Comment Period and Opportunity for Public Hearing on an Amendment to the Wyoming Regulatory Program

AGENCY: Office of Surface Mining Reclamation and Enforcement (OSMRE), Interior.

ACTION: Proposed rule.

SUMMARY: OSMRE is announcing procedures for a public comment period and for a public hearing on an amendment submitted by the State of Wyoming to amend its permanent regulatory program which was conditionally approved by the Secretary of the Interior under the Surface Mining Control and Reclamation Act of 1977 (SMCRA). The proposed amendment consists of extensive revisions to nine chapters of the approved Wyoming regulations.

This notice sets forth the times and locations that the proposed amendment is available for public inspection, the comment period during which interested persons may submit written comments on the proposed program amendment and information pertinent to the public hearing.

DATES: Written comments not received on or before 4:00 p.m. on June 20, 1986 will not necessarily be considered. A public hearing on the proposal will be held, if requested, on June 16, 1986, at the address listed below under **"ADDRESSES"**. Any person interested in making an oral or written presentation at the hearing should contact Mr. Jerry R. Ennis at the OSMRE Casper Field Office by 4:00 p.m. on June 5, 1986. If no one has contacted Mr. Ennis to express an interest in participating in the hearing by that date, the hearing will not be held. If only one person has so contacted Mr. Ennis, a public meeting, rather than a hearing may be held and the results of the meeting included in the Administrative Record.

ADDRESSES: Written comments should be mailed or hand-delivered to Mr. Jerry R. Ennis, Director, Office of Surface Mining Reclamation and Enforcement, Casper Field Office, 100 East "B" Street, Casper, Wyoming 82601-1918.

The public hearing, if requested, will be held at the Herschler Office Building, 122 West 25th Street, Casper, Wyoming 82002.

See **"SUPPLEMENTARY INFORMATION"** for address where copies of the Wyoming program amendment and administrative record on the Wyoming program are available. Each requestor may receive, free of charge, one single copy of the proposed program amendment by contacting the OSMRE Casper Field Office listed above.

FOR FURTHER INFORMATION CONTACT: Mr. Jerry R. Ennis, Director, Casper Field Office, Office of Surface Mining Reclamation and Enforcement, 100 East B Street, Casper, Wyoming 82601-1918, Telephone: (307) 261-5824.

SUPPLEMENTARY INFORMATION: Copies of the Wyoming program amendment, the Wyoming program and the administrative record on the Wyoming program are available for public review and copying at the OSMRE offices and the office of the State regulatory authority listed below, Monday through Friday, 9:00 a.m. to 4:00 p.m., excluding holidays:

Office of Surface Mining Reclamation and Enforcement, Administrative Record Room, Room 5124, 1100 L Street NW., Washington, DC 20240

Office of Surface Mining Reclamation and Enforcement, 100 East B Street, Casper, Wyoming 82601-1918

Wyoming Department of Environmental Quality, Land Quality Division, Herschler Office Building, 122 West 25th Street, Cheyenne, Wyoming 82002.

Background

The general background on the permanent program, the general background on the State program approval process, the general background on the Wyoming program, and the conditional approval can be found in the Secretary's Findings and conditional approval published in the November 26, 1980 **Federal Register** (45 FR 78637-78634). Subsequent actions concerning the conditions of approval and program amendments are identified at 30 CFR 950.11 and 950.15.

Proposed Amendment

On May 1, 1986, the State of Wyoming submitted to OSMRE amendment to its approved permanent regulatory program. The amendment packages consists of extensive revisions to nine separate chapters of the approval Wyoming regulations. The amended chapters and a brief description of the amended subject areas are as follows: Chapter I—Authorities and Definitions; Chapter II—Permit Applications; Chapter III—Permits for Special Categories for Surface Coal Mines; Chapter IV—Environmental Protection Performance Standards; Chapter IX—Variances for Surface Coal Mining Operations; Chapter XIII—Procedures Applicable to Surface Coal Mining Operations; Chapter XIV—Permit Revisions; Chapter XVII—Inspection, Enforcement and Penalties for Surface Coal Mining Operations and, Chapter XXIII—Required Studies for Surface Coal Mining Operations.

OSMRE is seeking comment on whether the Wyoming proposed modifications are no less effective than the requirements of the Federal provisions and satisfy the criteria for approval of State program amendments at 30 CFR 732.15 and 732.17.

The full text of the program modification submitted by Wyoming for OSMRE's consideration is available for public review at the address listed under **"ADDRESSES"**.

Additional Determinations

1. *Compliance with the National Environmental Policy Act:* The Secretary has determined that, pursuant to section 702(d) of SMCRA, 30 U.S.C. 1292(d), no evironmental impact statement need be prepared on this rulemaking.

2. *Executive Order No. 12291 and the Regulatory Flexibility Act:* On August 28, 1981, the Office of Management and Budget (OMB) granted OSMRE an exemption from sections 3, 4, 7, and 8 of Excutive Order 12291 for actions directly related to approval or conditional approval of State regulatory programs. Therefore, this action is exempt from preparation of a Regulatory Impact Analysis and regulatory review by OMB.

The Department of the Interior has determined that this rule will not have a significant economic effect on a substantial number of small entities under the Regulatory Flexibility Act (5 U.S.C. 601 *et seq.*). This rule will not impose any new requirements; rather, it will ensure that existing requirements established by SMCRA and the Federal rules will be met by the State.

3. *Paperwork Reduction Act:* This rule does not contain information collection requirements which require approval by the Office of Management and Budget under 44 U.S.C. 3507.

List of Subjects in 30 CFR Part 950

Coal mining, Intergovernmental relations, Surface mining, Underground mining.

Dated: May 15, 1986.

Mark Boster,

Acting Deputy Director, Operations and Technical Services.

[FR Doc. 86-11390 Filed 5-20-86; 8:45 am]

BILLING CODE 4310-05-M

FEDERAL MARITIME COMMISSION

46 CFR Part 530

[Docket No. 86-20]

Marine Terminal Operations; Truck Detention at the Port of New York Increase in Penalty Charges

AGENCY: Federal Maritime Commission.

ACTION: Notice of proposed rulemaking.

SUMMARY: In response to a Petition for Rulemaking the Federal Maritime Commission proposes to amend its truck detention rules at the Port of New York to increase penalty charges for truck delays at marine terminals from $4.00-per-15-minutes to $8.00-per-15 minutes. The Commission is also inviting comment on whether there is a continuing regulatory need for Commission-mandated truck detention rules.

DATE: Comments due on or before July 21, 1986.

ADDRESS: Comments (original and 15 copies) to: John Robert Ewers, Secretary, Federal Maritime Commission, 1100 L Street NW., Washington, DC 20573, (202) 523-5725.

FOR FURTHER INFORMATION CONTACT: Robert G. Drew, Director, Bureau of Tariffs, Federal Maritime Commission, 1100 L Street NW., Washington, DC 20573, (202) 523-5796.

SUPPLEMENTARY INFORMATION: By Petition filed December 17, 1985, the New York Terminal Conference (NYTC) [1] has requested that the Commission amend its rules pertaining to truck detention at the Port of New York (46 CFR 530) to increase penalty charges for truck delays at marine terminal facilities in the Port from $4.00-per-15-minutes to $8.00-per-15-minutes. The Petition was filed at the urging of the Bi-State Harbor Carriers Conference.[2] The truck detention rules were originally published in the **Federal Register** on November 10, 1975 as General Order No. 35 and resulted from the proceeding in Docket No. 72-41, *Truck Detention at the Port of New York*, 19 F.M.C. 25. The rules became effective on December 10, 1975 and were codified as Part 551 of Title 46 of the Code of Federal Regulations. After the passage of the Shipping Act of 1984, 98 Stat. 67, the rules were recodified as Part 530 of Title 46.

The rules set forth guidelines to be followed by motor carriers (common, contract or private), terminal operators and steamship companies whose action or inaction otherwise impedes expeditious pickup and delivery of cargo by motor carriers at marine terminal facilities within Port of New York. Sections 530.7(f) and 530.7(g) of the rules presently set forth a $4.00-per-15-minutes penalty charge to be paid by the terminal operator or the motor carrier as the case may be for delays beyond the periods set forth in § 530.7(f). As noted above, the Petition requests that the $4.00-per-15-minutes penalty charge be increased to $8.00-per-15-minutes in both sections.

In support of its request, NYTC states that over 10 years have elapsed since the rules were first promulgated and no change has been made during that time. It states that while the $4.00 charge may have been adequate and appropriate in 1975, that amount is neither adequate nor appropriate now given the substantial increase in operating costs during the intervening period.

Notice of the filing of the Petition was published in the **Federal Register** and no opposing comments were received. The Bi-State Harbor Carriers Conference submitted a letter in support of the Petition.

Because over 10 years have elapsed since the penalty amount was established, and inasmuch as two Associations who represent terminal and trucking interests that are impacted by this rule have sught an increase, the Commission believes that such an increase may be warranted and is accordingly granting the Petition. At the same time, however, the Commission is also concerned that the passage of time may have changed the circumstances which originally prompted the promulgation of detention rules for the Port of New York.

As NYTC noted in its Petition, the factual predicate for the detention Rules was the record developed in Docket No. 72-41, *supra*. In that proceeding, as well as those which preceded it, it was determined that there were unusual delays in the handling and interchange of freight between ocean and motor carriers at the Port of New York.[3] The Commission, therefore, promulgated the rules in Part 530 to establish a uniform and equitable system to ameliorate the unfavorable situation arising from congestion and truck detention at New York. It is possible, however, that the conditions which gave rise to these rules would not reoccur if the rules were rescinded, or that changed circumstances such as shifts in cargo transportation patterns, new technologies or other conditions have obviated the need for uniform truck detention rules at the Port of New York. It is also possible that the industry cooperation and coordination which underlies the filing of the present Petition would permit commercial resolutions of matters which originally gave rise to the rules and make unnecessary any Commission-mandated regulations. Accordingly, the Commission is also inviting comment on whether there exists a continued regulatory need for Commission rules establishing uniform practices relating to the interchange of freight between ocean and motor carriers at the Port of New York.

The Commission has determined that this proposed rule is not a "major rule" as defined in Executive Order 12291, dated February 17, 1981, because it will not result in:

(1) An an annual effect on the economy of $100 million or more;

(2) A major increase in costs or prices for consumers, individual industries, Federal, State or local government agencies, or geographical region; or

(3) Significant adverse effects on competition, employment, investment, productivity innovations, or on the ability of United States-based enterprises to compete in domestic or export markets.

The Chairman of the Federal Maritime Commission certifies pursuant to section 605(b) of the Regulatory Flexibility Act, 5 U.S.C. 605(b), that this rule, if adopted, will not have a significant economic impact on a substantial number of small entities, including small businesses, small organizational units or small governmental organizations.

The Paperwork Reduction Act, 44 U.S.C. 3801-3520, does not apply to this Notice of Proposed Rulemaking because the proposed amendments to Part 530 of Title 46, Code of Federal Regulations, do not impose any additional reporting or recordkeeping requirements or change the collection of information from members of the public which require the approval of the Office of Management and Budget.

Therefore, for the reasons set forth above, Part 530 of Title 46, Code of

[1] NYTC is an organization of marine terminal operators located in the Ports of New York and New Jersey operating under F.M.C. Agreement No. 8005, as amended.

[2] This Conference is comprised of motor carriers whose primary business is serving marine terminals in the Ports of New York and New Jersey.

[3] The Commission also examined loading and unloading practices at the Port of New York in *Truck and Lighter Loading and Unloading Practices at New York Harbor*, 9 F.M.C. 505 (1966), *affirmed sub nom. American Export-Isbrandtsen Lines, et al. v. Federal Maritime Commission*, 389 F.2d 962 (D.C. Cir. 1968); *Truck and Lighter Loading and Unloading Practices at New York Harbor*, 12 F.M.C. 166 (1969); *affirmed sub nom. American Export-Isbrandtsen Lines, et al. v. Federal Maritime Commission*, 444 F.2d 824 (D.C. Cir. 1970).

Federal Regulations, is proposed to be amended as follows:

PART 530—[AMENDED]

1. The authority Citation to Part 530 is revised to read as follows:

Authority: 5 U.S.C. 553; 46 U.S.C. app. 816, 841a, 1709 and 1716.

§ 530.7 [Amended]

2. In paragraphs (f) (1), (f) (2), and (g) of § 530.7, the $4.00-per-minutes penalty charge is increased to $8.00-per-15-minutes.

By the Commission.

John Robert Ewers,

Secretary.

[FR Doc. 86-11417 Filed 5-20-86; 8:45 am]

BILLING CODE 6730-01-M

FEDERAL COMMUNICATIONS COMMISSION

47 CFR Part 22

[CC Docket No. 86-164; FCC 86-206]

Common Carrier Services; Simplify Individual Licensing Procedures in the Domestic Public Air-Ground Radiotelephone Service

AGENCY: Federal Communications Commission.

ACTION: Proposed rule.

SUMMARY: The FCC proposes to amend Part 22 of its rules (which apply to the Public Mobile Services) to eliminate the application processing function for individual airborne mobile units (AMUs) in the Domestic Public Air-Ground Radiotelephone Service (DPAGRS). This rule change is proposed to ease the administrative burden on the public and to promote more efficient use of Commission resources.

DATES: Comments must be submitted on or before June 24, 1986, and reply comments on or before July 9, 1986.

ADDRESS: Federal Communications Commission, Washington, DC 20554.

FOR FURTHER INFORMATION CONTACT: Richard G. Owens, Mobile Services Division, Common Carrier Bureau, (202) 632-6450.

SUPPLEMENTARY INFORMATION: The collection of information requirement contained in this proposed rule change has been submitted to OMB for review under section 3504(h) of the Paperwork Reduction Act. Persons wishing to comment on this collection of information requirement should direct their comments to the Office of Information and Regulatory Affairs, Office of Management and Budget, Washington, DC 20503, Attention: Desk Officer for Federal Communications Commission.

This is a summary of the Commission's Notice of Proposed Rulemaking, adopted April 18, 1986, released April 30, 1986.

The full text of this Commission decision is available for inspection during normal business hours in the FCC Docket Branch, room 230, 1919 M Street, NW., Washington, DC. The complete text of this decision may also be purchased from the Commission's copy contractor, International Transcription Service, (202) 857-3800, 2100 M Street, NW., Suite 140, Washington, DC 20037.

Summary of Proposed Rule

1. The Mobile Services Division currently licenses individual AMUs which are installed on board private aircraft and which communicate with the single, multi-frequency air-ground base stations serving major air hubs. The Division processes approximately 2700 individual AMU Form 409 applications per year. The individual applicant is not required to demonstrate financial or other qualifications, and there is no basis for comparative evaluation, so applications are routinely granted without lengthy review. The applicant must submit a letter of intent from a local wireline carrier setting forth the carrier's willingness to serve as a nationwide billing agent for the AMU, as well as the number of AMUs to be served, frequencies requested, and point of registry. The Commission has previously eliminated licensing of individual units in the land mobile and rural radio services.

2. The Mobile Services Division proposes to simplify the licensing of individual airborne mobile units (AMUs), by implementing a self-licensing procedure: the applicant would fill out an application, retain one copy, and mail the original to the Commission. The applicant would also be required to retain the carrier's letter of intent. The AMU license would be effective on the date the application is postmarked. The same procedure would be followed for modifications and renewals. We also invite comment on an alternative to this proposal—association of the AMU with the license of a specific DPAGS base station licensee. We further propose to eliminate assignment of individual AMU call signs by the Commission, substituting the official FAA registration number of the aircraft on which the AMUs is installed, with a prefix, as that AMU's call sign.

3. The mail-in licensing procedure is uniquely suited to AMUs. Interference complaints against users are rare, and no AMU license has ever been forfeited or revoked. Moreover, spectrum management in the DPAGRS is achieved through type acceptance and operating rules. The Commission would maintain a data base containing the information submitted on the Form 409 in order to investigate complaints, but the application processing function would be eliminated. Commission staff could be reassigned to more pressing matters.

4. This is a non-restricted notice and comment rulemaking proceeding. *See* § 1.1231 of the Commission's rules, 47 CFR 1.1231, for rules governing permissible *ex parte* contacts.

5. Pursuant to the Regulatory Flexibility Act of 1980, 5 U.S.C. section 603, this proceeding will affect air-ground licenses, air-ground radiotelephone equipment manufacturers and members of the public receiving air-ground service. Some of these may be small entities. Public comment is requested on the initial regulatory analysis set out in full in the Commission's complete decision.

6. Pursuant to applicable procedures set forth in §§1.415 and 1.419 of the Commission's rules, 47 CFR 1.415 and 1.419, interested parties may file comments on or before June 24, 1986, and reply comments on or before July 9, 1986. All relevant and timely comments will be considered by the Commission before final action is taken in this proceeding.

7. Accordingly, it is proposed, That 47 CFR 22.9(c)(2) be amended as set forth below.

List of Subjects in 47 CFR Part 22

Communications common carriers.

William J. Tricarico,

Secretary.

47 CFR Chapter I is amended as follows:

PART 22—PUBLIC MOBILE RADIO SERVICES

8. The authority citation for Part 22 continues to read:

Authority: Secs. 4, 303, 48 Stat. 1066, 1082, as amended (47 U.S.C. 154, 303).

9. Section 22.9 is amended by revising paragraph (c)(2) to read as follows:

§ 22.9 Standard application forms for Public Land Mobile, Rural Radio, Domestic Public Cellular Radio Telecommunications, and Offshore Radio Services

* * * * *

(c) * * *

* * * * *

(2) Airborne mobile stations. Licenses for airborne mobile stations shall be granted upon mailing to the Commission

of a properly-completed FCC Form 409. The effective date of the license shall be the date on which the Form is mailed. This form shall also be used for the modification and renewal of such licenses. FCC Form 409 shall be accompanied by the supplemental showing set forth in § 22.15(i) (2) and (3).

* * * * *

[FR Doc. 86-10550 Filed 5-20-86; 8:45 am]

BILLING CODE 6712-01-M

DEPARTMENT OF THE INTERIOR

Fish and Wildlife Service

50 CFR Part 17

Endangered and Threatened Wildlife and Plants; Proposed Listing of Blackside Dace as Threatened

AGENCY: Fish and Wildlife Service, Interior.

ACTION: Proposed rule.

SUMMARY: The Service proposes to list the blackside dace (*Phoxinus cumberlandensis*) as a threatened species under the Endangered Species Act of 1973 (Act), as amended. Historically, this fish likely inhabited many small cool-water streams in the upper Cumberland Rivers system in southeastern Kentucky and northeastern Tennessee. However, primarily due to the impacts of siltation from coal mining prior to adoption of current regulations, silviculture, agriculture, and road construction, and the impacts of unregulated acid mine drainage and impoundments, the species is now restricted to short stream reaches (an estimated total of 14 stream miles) in 30 streams.

Most of these streams are now threatened by many of the same factors that caused the species' original decline. Comments and information pertaining to this proposal are sought from the public.

DATES: Comments from all interested parties must be received by July 21, 1986. Public hearing requests must be received by July 7, 1986.

ADDRESSES: Comments and materials concerning this proposal should be sent to the Field Supervisor, Endangered Species Field Station, U.S. Fish and Wildlife Service, 100 Otis Street, Room 224, Asheville, North Carolina 28801. Comments and materials received will be available for public inspection, by appointment, during normal business hours at the above address.

FOR FURTHER INFORMATION CONTACT: Richard G. Biggins, Endangered Species Field Station, U.S. Fish and Wildlife Service, 100 Otis Street, Room 24, Asheville, North Carolina 28801 (704/259-0321 or FTS 672-0321).

SUPPLEMENTARY INFORMATION:

Background

The blackside dace (*Phoxinus cumberlandensis*) was discovered in 1975 (a few misidentified specimens from old collections have now been found) and described by Starnes and Starnes (1978). This fish inhabits streams on both public and private property in the upper Cumberland River drainage (primarily above Cumberland Falls) in Pulaski, Laurel, McCreary, Whitley, Knox, Bell, Harlan, and Letcher Counties, Kentucky; and Scott, Campbell, and Claiborne Counties, Tennessee; where it inhabits small (7 to 15 feet wide) upland streams with moderate flows.

The extent of the blackside dace's historic distribution is unknown, but available records show that it has been extirpated from at least ten streams (O'Bara 1985). Starnes (1981) reported that, based on his physical habitat evaluation, it may have existed in at least 52 other streams, but was eliminated before it was discovered in these waters. Presently, it is known from a total of only about 14 stream miles in 30 separate streams (O'Bara 1985).

The areas of Kentucky and Tennessee inhabited by the fish are rich in coal reserves and forest resources. It is believed that impacts associated with the development of these resources has caused the loss of many blackside dace populations. Harker *et al.* (1980a) stated that many streams in the upper Cumberland River Basin have been affected by acid mine drainage. This report further stated that the major source of pollution in the area is the excessive siltation associated with strip mining, highway construction, and poor land use. Future mining of the area's coal reserves if not conducted in accordance with all existing regulations, increased silvicultural and agricultural activities, road and bridge construction, and other activities that are not conducted with the welfare of the species in mind are expected to further threaten the species.

The blackside dace is listed by the Kentucky Nature Preserves Commission (Harker *et al.* 1980b) as a "threatened (endemic)" species and by the Tennessee Heritage Program of the Tennessee Department of Conservation as "endangered." This small fish (less than 3 inches long) has a single black lateral stripe, a green/gold back with black specks, and a pale or sometimes brilliant scarlet belly (Starnes and Etnier 1980). The fish's fins are often bright yellow with metallic silver surrounding the base of the pelvic and pectoral fins. The species is generally associated with undercut banks and large rocks and is usually found within relatively stable, well-vegetated watersheds with good riparian vegetation (Starnes 1981). Stable watersheds help maintain cool temperatures and minimize silt to the benefit of the species. O'Bara (1985) also found that the fish's presence was apparently closely correlated with healthy riparian vegetation where canopy cover exceeded 70 percent and with stream flows that were of sufficient velocity to remove silt from areas just downstream of the riffles. The fish was not found in low gradient silty streams nor in high gradient mountain tributaries. The blackside dace spawns in May and June and is thought to feed on algae, detritus, and sometimes insects (Starnes 1981).

On December 30, 1982, the Service announced in the **Federal Register** (47 FR 58454) that the blackside dace, along with 146 other fish species, was being considered for addition to the List of Endangered and Threatened Wildlife. On May 1, 1984 (received by the Service May 16, 1984), Mr. George Burgess, Secretary-Treasurer of the Southeastern Fishes Council, submitted a petition to list the species as threatened. The Service reviewed the petition and in the **Federal Register** of September 4, 1984 (49 FR 34878), announced its finding that the information submitted was substantial in indicating the petitioned action may be warranted. On January 4, 1985, the Service notified Federal, State, and local governmental agencies and interested parties of its review of the species' status. That notification requested information on the species' status and threats to its continued existence. Nine responses to the January 4, 1985, notification were received. Support for some measure of protection for the fish was contained in four letters, four letters outlined potential impacts on agency programs, and five letters commented on specific threats. On July 18, 1985, the Service published a notice in the **Federal Register** (50 FR 29238) concluding that the petition to list the species received from Mr. George Burgess on behalf of the Southeastern Fishes Council was warranted but was precluded from immediate proposal because of other pending actions to list, delist, or reclassify species.

Summary of Factors Affecting the Species

Section 4(a)(1) of the Endangered Species Act (16 U.S.C. 1531 *et seq.*) and regulations (50 CFR Part 424) promulgated to implement the listing

provisions of the Act set forth the procedures for adding species to the Federal lists. A species may be determined to be an endangered or threatened species due to one or more of the five factors described in section 4(a)(1). These factors and their application to the blackside dace (*Phoxinus cumberlandensis*) are as follows:

A. *The present or threatened destruction, modification, or curtailment of its habitat or range.* As the blackside dace was not discovered until 1975 and relatively few historic fish collection records exist for the Upper Cumberland River Basin, the extent of the species' historic range and the number of populations that may have been lost are not known. However, based on available data, it can be concluded that the species' total distribution and the size of the extant population has been substantially diminished. Starnes (1981) sampled 168 upper Cumberland River Basin streams and reported the fish from only 27 streams. He concluded, based on the physical habitat requirements, that the fish could have been eliminated from at least 52 other waters before the fish's existence was known. O'Bara (1985) surveyed 193 upper Cumberland River Basin sites and reported the species present in 30 streams and extripated from 10. Most of the 30 extant populations are impacted by siltation or some other factor that seriously limits the population's size and vigor. As a result of limiting factors, O'Bara (1985) estimated that the fish now inhabits a total of about 14 stream miles in the 30 streams, and he considered only 9 streams (about 8 stream miles) to contain healthy populations. All the populations inhabited more than 1 stream mile, and some were limited to just a few hundred yards and were represented by the collection of only one fish (O'Bara 1985).

The upper Cumberland River Basin is rich in coal reserves and forested lands, and development of these natural resources with associated road and bridge construction has been extensive and can be expected to continue. The most frequently cited threat (O'Bara 1985) was coal-mining related problems, followed in order of threat by logging, road construction, agriculture, human development, and natural low flows. Only one of the streams described by O'Bara (1985) was not threatened by some factor. Unless the needs of the species are considered so that the impacts from these and other threats can be minimized, the loss of blackside dace populations will continue.

For proper evaluation of these threats, it should be noted that the Service has issued a no-jeopardy biological opinion under Section 7 of the Endangered Species Act for the State of Kentucky's and the Federal Office of Surface Mining's coal mine regulation program. Although no final determination could be made until and unless the blackside dace were listed and a consultation undertaken, the Service has no evidence that mining activities conducted in accordance with State and Federal regulations are a threat to the species. Rather, past unregulated activities have contributed to the decline of the blackside dace and current activities not in compliance with appropriate regulations may be a threat to the species.

B. *Overutilization for commercial, recreational, scientific, or educational purposes.* There is no history of this factor being a problem for the blackside dace. However, because of the interest in the species expected to be generated by the listing process, the Service is concerned that this problem may arise in the future. To help minimize this threat, the Service has not proposed critical habitat as this action requires delineation of the species' specific habitats (see "Critical Habitat" Section of this rule).

C. *Disease or predation.* There is no evidence of threats to this species from disease or predation.

D. *The inadequacy of existing regulatory mechanisms.* Both the State of Tennessee and the State of Kentucky prohibit taking this fish for scientific purposes without a State collecting permit. Federal listing would provide additional protection by requiring Federal permits for taking the fish and by requiring Federal agencies to consult with the Service when projects they fund, authorize, or carry out may affect the species.

E. *Other natural or manmade factors affecting its continued existence.* The southern redbelly dace (*Phoxinus erythrogaster*) is not a native to the upper Cumberland River Basin but is now present in many basin streams. Starnes and Starnes (1981) suggested that this fish "may have displaced the blackside dace to some degree in some of those steams that are less upland in character." They found that the redbelly dace had become established in areas where the water and habitat quality had been altered to create warmer and more turbid conditions. However, they stated that the blackside dace seemed able to persist in the better quality habitats.

The Service has carefully assessed the best scientific and commercial information available regarding the past, present, and future threats faced by this species in determining to propose this rule. Based on this evaluation, the preferred action is to list the blackside dace (*Phoxinus cumberlandensis*) as a threatened species. Although specific historic records are lacking, available data from habitat evaluations indicate that this fish once likely inhabited many small cool-water streams throughout much of the upper Cumberland River Basin. However, the species is now known to exist in only about 14 stream miles in 30 separate stream. The many factors that brought the species to this condition are still threatening it. Because of the number of populations in existence, it is unlikely the species will become extinct in the forseeable future. Therefore, endangered species status is not appropriate. The reasons for not proposing critical habitat are discussed in the "Critical Habitat" section of this rule.

Critical Habitat

Section 4(a)(3) of the Act, as amended, requires that to the maximum extent prudent and determinable, the Secretary designate any habitat of a species which is considered to be critical habitat at the time the species is determined to be endangered or threatened. The Service finds that designation of critical habitat is not prudent for this species at this time. Although take of the blackside dace is presently not known to be a problem, the species could be vulnerable to this threat. The fish inhabits very small (7 to 15 feet wide) streams, occupies only short stream segments (most less than 1 mile), exists in small numbers in these stream reaches, and is known from only nine healthy populations. Most of the inhabited stream reaches are easily accessible by road. Because of potential and preceived conflicts with coal mining activities, substantial notoriety may develop from this proposed rule and subsequent Federal actions. Therefore, in light of these factors, the Service believes that publishing maps and text detailing the location of the blackside dace's specific habitat and constituent elements of that habitat, as required for any critical habitat designation, would increase the species' vulnerability to illegal taking and/or vandalism, further threaten the species, and increase the law enforcement problem. All appropriate local, State, and Federal agencies and governmental officials will be notified of the location and importance of protecting this species' habitat.

Protection of this species' habitat will also be addressed through the recovery

process and through the section 7 jeopardy standard (see below). Therefore, it would not be prudent to designate critical habitat for the blackside dace at this time.

Available Conservation Measures

Conservation measures provided to species listed as endangered or threatened under the Endangered Species Act include recognition, recovery actions, requirements for Federal protection, and prohibitions against certain practices. Recognition through listing encourages and results in conservation actions by Federal, State, and private agencies, groups, and individuals. The Endangered Species Act provides for possible land acquisition and cooperation with the States and requires that recovery actions be carried out for all listed species. Such actions are initiated by the Service following listing. The protection required of Federal agencies and the prohibitions against taking and harm are discussed, in part, below

Section 7(a) of the Act, as amended, requires Federal agencies to evaluate their actions with respect to any species that is proposed or listed as endangered or threatened and with respect to its critical habitat, if any is being designated. Regulations implementing this interagency cooperation provisions of the Act are codified at 50 CFR Part 402, and are now under revision (see proposal at 48 FR 29990; June 29, 1983). Section 7(a)(4) requires Federal agencies to confer with the Service on any action that is likely to jeopardize the continued existence of a proposed species or result in destruction or adverse modification of proposed critical habitat. If a species is listed subsequently, section 7(a)(2) requires Federal agencies to ensure that activities they authorize, fund, or carry out are not likely to jeopardize, the continued existence of such a species or to destroy or adversely modify its critical habitat. If a Federal action may affect a listed species or its critical habitat, the responsible Federal agency must enter into formal consultation with the Service. Federal activities that could impact the species and its habitat include, but are not limited to, the following: issuance of permits for surface mining, abandoned mine land reclamation, road and bridge construction, and timber management on Federal lands. It has been the experience of the Service, however, that nearly all section 7 consultations are resolved so that the species is protected and the project objectives can be met.

The Act and implementing regulations found at 50 CFR 17.21 and 17.31 set forth a series of general prohibitions and exceptions that apply to all threatened wildlife. These prohibitions, in part, make it illegal for any person subject to the jurisdiction of the United States to take, import or export, ship in interstate commerce in the course of commercial activity, or sell or offer for sale in interstate or foreign commerce any listed species. It also is illegal to possess, sell, deliver, carry, transport, or ship any such wildlife that has been taken illegally. Certain exceptions apply to agents of the Service and State conservation agencies.

Permits may be issued to carry out otherwise prohibited activities involving threatened wildlife species under certain circumstances. Regulations governing permits are at 50 CFR 17.22, 17.23, and 17.32. Such permits are available for scientific purposes, to enhance the propagation or survival of the species, and/or for incidental take in connection with otherwise lawful activities. For threatened species, there are also permits for zoological exhibition, educational purposes, or special purposes consistent with the purposes of the Act. In some instances, permits may be issued during a specified period of time to relieve undue economic hardship that would be suffered if such relief were not available.

Public Comments Solicited

The Service intends that any final action resulting from this proposal will be as accurate and as effective as possible. Therefore, any comments or suggestions from the public, other concerned governmental agencies, the scientific community, industry, or any other interested party concerning any aspect of this proposal are hereby solicited. Comments particularly are sought concerning:

(1) Biological, commercial trade, or other relevant data concerning any threat (or lack thereof) to this species;

(2) The location of any additional populations of this species and the reasons why any habitat should or should not be determined to be critical habitat as provided by Section 4 of the Act;

(3) Additional information concerning the range and distribution of this species; and

(4) Current or planned activities in the subject area and their possible impacts on this species.

Final promulgation of the regulations on this species will take into consideration the comments and any additional information received by the Service, and such communications may lead to adoption of a final regulation that differs from this proposal.

The Endangered Species Act provides for a public hearing on this proposal, if requested. Requests must be filed within 45 days of the date of the proposal. Such requests must be made in writing and addressed to Mr. Warren T. Parker, Field Supervisor, Endangered Species Field Station, U.S. Fish and Wildlife Service, 100 Otis Street, Room 224, Asheville, North Carolina 28801.

National Environmental Policy Act

The Fish and Wildlife Service has determined that an Environmental Assessment, as defined under the authority of the National Environmental Policy Act of 1969, need not be prepared in connection with regulations adopted pursuant to section 4(a) of the Endangered Species Act of 1973, as amended. A notice outlining the Service's reasons for this determination was published in the **Federal Register** on October 25, 1983 (48 FR 49244).

Literature Cited

Harker, D.F., M.E. Medley, W.C. Houtcooper, and A. Phillippi. 1980b. Kentucky Natural Areas Plan, Appendix A. Kentucky Nature Preserves Commission, Frankfort, Kentucky.

Harker, D.F., M.L. Warren, Jr., K.E. Camburn, S.M. Call, G.J. Fallo, and P. Wigley. 1980a. Aquatic biota and water quality survey of the upper Cumberland River basin, Technical Report, Volume I, 409 pp. Prepared for Kentucky Division of Water Quality, Department of Natural Resources and Environmental Protection.

O'Bara, C.J. 1985. Status survey of the blackside dace *(Phoxinus cumberlandensis)*. Report to the U.S. Department of the Interior, Fish and Wildlife Service, 100 Otis Street, Room 224, Asheville, North Carolina. 30 pp. plus Appendix.

Starnes, W.C. 1981. Listing package for the blackside dace *(Phoxinus cumberlandensis)*. Report to the U.S. Department of the Interior, Fish and Wildlife Service, 100 Otis Street, Room 224, Asheville, North Carolina. 41 pp. plus Appendices A and B.

Starnes, W.C., and D.A. Etnier. 1980. Fishes. pp. 23–24. In: Eager, D.C., and R.M. Hatcher (eds.), Tennessee's Rare Wildlife, Vol. I: The Vertebrates. Tennessee Wildlife Resources Agency and Tennessee Conservation Department. 337 pp.

Starnes, W.C., and L.B. Starnes. 1978. A new cyprinid of the genus *Phoxinus* endemic to the upper Cumberland River drainage. Copeia 1978: 508–516.

Author

The primary author of this proposed rule is Richard G. Biggins, Asheville Endangered Species Field Station, U.S. Fish and Wildlife Service, 100 Otis Street, Room 224, Asheville, North Carolina 28801 (704/259–0321 or FTS 672–0321).

List of Subjects in 50 CFR Part 17

Endangered and threatened wildlife, Fish, Marine mammals, Plants (agriculture).

Proposed Regulations Promulgation

PART 17—[AMENDED]

Accordingly, it is hereby proposed to amend Part 17, Subchapter B of Chapter I, Title 50 of the Code of Federal Regulations, as set forth below:

1. The authority citation for Part 17 continues to read as follows:

Authority: Pub. L. 93–205, 87 Stat. 884; Pub. L. 94–359, 90 Stat. 911; Pub. L. 95–632, 92 Stat. 3751; Pub. L. 96–159; 93 Stat, 1225; Pub. L. 97–304, 96 Stat. 1411 (16 U.S.C. 1531 *et seq.*).

2. It is proposed to amend § 17.11(h) by adding the following, in alphabetical order under "FISHES", to the List of Endangered and Threatened Wildlife:

§ 17.11 Endangered and threatened wildlife.

* * * * *

(h) * * *

Species		Historic range	Vertebrate population where endangered or threatened	Status	When listed	Critical habitat	Special rules
Common name	Scientific name						
FISHES							
Dace, blackside	*Phoxinus cumberlandensis*	U.S.A.(TN,KY)	Entire	T	NA	NA	

Dated: May 6, 1986.

Susan Recce,

Acting Assistant Secretary for Fish and Wildlife and Parks.

[FR Doc. 86–11364 Filed 5–21–86; 8:45 am]

BILLING CODE 4310-55-M

50 CFR Part 17

Endangered and Threatened Wildlife and Plants; Proposed Threatened Status for the Florida Scrub Jay

AGENCY: Fish and Wildlife Service, Interior.

ACTION: Proposed rule.

SUMMARY: The Florida scrub jay (*Aphelocoma coerulescens coerulescens*) is almost exclusively confined to scrub habitat in peninsular Florida that generally has high real estate value. Much of the coastal scrub formerly inhabited by the bird has been cleared for beachfront hotels, houses, and condominiums. Many areas in the interior of Florida are presently being developed for citrus groves and housing. Clearly, the major cause of decline has been habitat destruction. Other threats to the Florida scrub jay are malicious shooting of the birds by vandals, accidents with motor vehicles and unfavorable habitat succession problems in some areas. This proposal, if made final would implement the protection and recovery provisions of the Endangered Species Act of 1973, as amended, for the Florida scrub jay. The Service seeks data and comments from the pulic on this proposal.

DATES: Comments from all interested parties must be received by July 21, 1986. Public hearing requests must be received by July 7, 1986 at the office listed in the next paragraph.

ADDRESS: Comments and materials concerning this proposal should be sent to the Field Supervisor, Endangered Species Field Station, U.S. Fish and Wildlife Service, 2747 Art Museum Drive, Jacksonville, Florida 32207. Comments and materials received will be available for public inspection, by appointment, during normal business hours at the above address.

FOR FURTHER INFORMATION CONTACT: Mr. David J. Wesley, Field Supervisor, at the above address (telephone 904/791–2580 or FTS 946–2580).

SUPPLEMENTARY INFORMATION:

Background

The Florida scrub jay (*Aphelocoma coerulescens coerulescens*) was originally named by Bosc, 1795, as *Corvus coerulescens.* The species *Aphelocoma coerulescens* is widely distributed in the western United States, but the Flordia Subspecies, *Aphelocoma coerulescens coerulescens*, an isolated form of the species, is restricted to scrub habitat areas of peninsular Florida. The Florida scrub jay is a 30 centimeter (12 inch), bluish-colored, crestless jay totally lacking the white-tipped wings and tail feathers of the more common and widespread blue jay (*Cyanocitta cristata*). A necklace of blue feathers separates the white throat from the grayer underparts, and a white line over the eye often blends into a whitish forehead. The tail is long and loose in appearance (Woolfenden *in* Kale 1978). The subspecies has been recorded only once from outside of peninsular Florida, on Jekyll Island, Georgia, (Moore 1975).

The following information on the biology of the Florida scrub jay is abstracted from information obtained by Cox (1984) and Woolfenden and Fitzpatrick (1984). Scrub jays are long-lived (10 years or more), sedentary, permanently monogamous inhabitants of oak scrub. They typically nest at the edge of an oak thicket, near an open area. Scrub jays rarely breed at one year of age, even though they are then physiologically mature; instead they may remain on their natal territories for a number of years and assist their parents in raising further broods. Scrub jay breeding pairs with helpers have significantly greater reproductive success than pairs without helpers. Males may remain with their parents as helpers for longer periods than females (up to six years). As the group's size increases, the territory grows. Eventually, a male helper may be able to claim part of the enlarged territory for his own breeding territory. Females rarely help for more than two years, and disperse within the local population as breeding vacanies arise. Scrub jays are omnivorours, eating almost anything they can catch, but they concentrate on lizards and arthropods in spring and summer, and acorns in fall and winter. Surplus acorns are frequently cached in the ground.

The Florida scrub jay lives only in the Florida scrub habitat, which occurs on fine, white, excessively drained sands. This type of sand occurs along present coastlines in Florida, and in dunes deposited during the past when sea levels were much higher than at present. The most important of these dune systems include the Atlantic coastal ridge along the Atlantic coast of Florida, the Lake Wales Ridge in Polk and Highlands Counties, and the extensive sand dunes of Ocala National Forest. Cox (1984) stated that the most commonly occupied type of scrub by scrub jays is "oak scrub." Oak scrub consists of a single layer of evergreen shrubs, usually dominated by three species of oaks—myrtle oak (*Quercus*

myrtifolia), and live oak (*Quercus geminata*), and Chapman oak (*Quercus chapmanii*). Scrub jays are rarely found as residents in habitat with more than 50% canopy cover that is over 3 meters (10 feet) tall. In summary, scrub jay habitat consists of dense thickets of scrub oaks less than 3 meters in height, interspersed with bare sand for foraging and storing acorns..

Scrub jays have been reported in the past from scrub habitat in each of the following Florida Counties: Alachua, Brevard, Broward, Charlotte, Citrus, Clay, Collier, Dade, De Soto, Dixie, Duval, Flagler, Gilchrist, Glades, Hardee, Hendry, Hernando, Highlands, Hillsborough, Indian River, Lake, Lee, Levy, Manatee, Marion, Martin, Okeechobee, Orange, Osceola, Palm Beach, Pasco, Pinellas, Polk, Putnam, St. Johns, St. Lucie, Sarasota, Seminole, Sumter, and Volusia. Today, scrub jays have been completely eliminated from Broward, Dade, Duval, Pinellas, and St. Johns Counties, and their numbers have decreased drastically in Brevard, Highlands, Orange, Palm Beach, and Seminole Counties. In virtually every county where the species occurs, it is known to have declined in numbers. It has disappeared from fully 40% of the locations from which it was known historically, and the total population has probably dropped by half in the past century (Cox 1984). The major cause of the declines and disappearances is habitat destruction. The total number of Florida scrub jays estimated by Cox to survive in Florida today is between 15,000 and 22,000 birds, of which about 13,000 to 20,000 are on public lands, and about 2,000 or private property.

On March 16, 1984, Jeffrey A. Cox, Florida State Museum, University of Florida, Gainesville, Florida, petitioned the Service to list the Florida scrub jay as a threatened species. Dr. Cox provided a comprehensive report on the status of this species in support of the petition. The service found on May 4, 1984, that the petitioned action may be warranted and published the finding on July 13, 1984 (49 FR 28584). A 12-month finding was made on March 18, 1985, and published on July 18, 1985 (50 FR 24238), that the action requested was warranted but precluded by work on other pending proposals. Publication of this proposed rule constitutes the next and final 12-month finding for the Florida scrub jay, as required under section 4(b)(3)(c)(i) of the Act, that the petitioned action is warranted.

Summary of Factors Affecting the Species

Section 4(a)(1) of the Endangered Species Act (16 U.S.C. 1531 *et seq.*) and regulations promulgated (50 CFR Part 424) to implement the listing provisions of the Act set forth the procedures for adding species to the Federal lists. A species may be determined to be an endangered or threatened species due to one or more of the five factors described in section 4(a)(1). These factors and their application to the Florida scrub jay, *Aphelocoma coerulescens coerulescens*, are as follows (abstracted for Cox 1984):

A. *The present or threatened destruction, modification, or curtailment of its habitat or range.* The future of the Florida scrub jay depends on the continued existence of its scrub habitat. Unfortunately most scrub lands are in areas that give them high real estate value. Much of the coastal scrub has been cleared for beachfront hotels, houses, and condominiums. Scrub habitats in the interior of the Florida peninsula are subject to development for citrus groves and housing developments. Scrub jays have disappeared from 40% of the locations where they formerly occurred, and the total population has declined by half in the past 100 years. The major cause of the declines and disappearances is habitat destruction. Although housing and agricultural development has been occurring in Florida for many years, the pace of this development has accelerated since the 1960's. The human population of Florida nearly doubled from 1969 to 1980, from 4.95 million to 9.75 million (Terhune 1982). This trend will continue into the foreseeable future, placing even more pressures on natural habitats. Most of the housing developments that are located in scrub habitats are less than 20 years old. In many developments, scrub jays are barely hanging on, and they will probably disappear in a few years as land-clearing continues. The sites most likely to be destroyed by development in the near future are concentrated in Brevard, Highlands, and Palm Beach Counties. It is possible that no scrub jays will remain in Palm Beach County by 1990 (Cox 1984).

Of the 15,000 to 22,000 scrub jays that may survive in Florida at the present time, over 80% occur in only two general areas: Merritt Island/Cape Canaveral (Brevard County) and Ocala National Forest (Lake, Marion, and Putnam Counties). Elsewhere, only small populations are scattered locally throughout peninsular Florida.

B. *Overutilization for commercial, recreational, scientific, or educational purposes.* By far, habitat destruction has played the major role in the decline of the Florida scrub jay. Nevertheless, there is evidence (S.A. Grimes, in litt.) that, in St. Johns County at least, some scrub jays have been shot by vandals. Grimes has seen people with guns in the area along SR A1A, and a tame scrub jay would present a tempting target to vandals. In addition, the tameness and beauty of the bird make it desirable (although illegal) as a pet, and it is known to have been used for such purposes in the past.

C. *Disease or predation.* Disease and predation are not thought to be factors that have led to the scrub jay's decline.

D. *The inadequacy of existing regulatory mechanisms.* The Florida scrub jay is protected by the Migratory Bird Treaty Act (16 U.S.C. 703 *et seq.*) and by Florida State law (Chapter 39–27, Florida Administrative Code). These laws, however, do not protect the birds from habitat destruction, the major cause of the species' decline in Florida.

E. *Other natural or manmade factors affecting its continued existence.* Human interference with the natural functioning and development of an ecosystem has played an important part in the decline of the scrub jay in certain areas. Historically, fires caused by lightning were major factors in maintaining the sparse, low scrub vegetation preferred by the scrub jay. In some parts of the range of this species, human efforts to prevent and/or control natural fires have allowed the scrub to become too dense and tall to support populations of scrub jays. An example of such a situation is found in the miles of coastal barrier scrub in St. Johns County. Scrub jays were known to be resident in this area in the past, but none currently occur there. Fire suppression to protect human interests has allowed the scrub to become too dense for the scrub jays. Thus, a large area of coastal St. Johns County, which used to support a healthy population of the species, no longer contains suitable habitat.

Cox (1984) believes that, in St. Johns County at least, one of the factors in the extirpation of the scrub jay may have been accidental road kills from passing trucks and cars. Scrub jays frequently forage along roadsides and other openings in the scrub, and, since SR A1A runs directly down the middle of the scrub on the long, narrow, barrier island, there was a high potential for birds to be killed in this manner.

The Service has carefully assessed the best scientific and commercial information available regarding the past, present, and future threats faced by this species in determining to propose this rule. Based on this evaluation, the preferred action is to list the Florida scrub jay as a threatened species.

Threatened rather than endangered status was chosen for the following reasons. A high percentage of scrub jays occur on Federal lands that can be managed to benefit the birds. On the other hand, the facts that the birds no longer occurs at 40% of the localities where it once was found and has decreased in numbers by at least 50% in the past century, indicate that it is extremely vulnerable, and could become an endangered species unless surviving populations are protected and managed. Critical habitat is not being proposed for the Florida scrub jay for reasons discussed in the next section.

Critical Habitat

Section 4(a)(3) of the Act, as amended, requires that to the maximum extent prudent and determinable, the Secretary designate any habitat of a species that is considered to be critical habitat at the time the species is determined to be endangered or threatened. The Service finds that designation of critical habitat is not prudent for the Florida scrub jay at this time. All concerned Federal agencies already know of the presence of the scrub jay on lands they manage, and are aware of the habitat needs of the bird. In addition, the Federal lands involved cover extensive areas, not all of which will be, or will remain, critical over extended periods of time. As scrub habitat is burned or clear-cut in some areas, scrub jay populations will move into other areas with more suitable habitat. As the burned or clear-cut areas grow back, jays will reinvade them. Thus, there is, and will continue to be, a periodic change in localities within the Federal lands occupied by the birds. It is impossible to predict when or where populations will be in residence at any particular time.

The rest of the populations of scrub jays (20% of the estimated total number of birds) are widely and thinly scattered over peninsular Florida in many small localities which would be nearly impossible to delineate in a meaningful or productive fashion. In addition, the tameness and beauty of the scrub jay make it a desirable bird for collectors. Although it is illegal to capture and hold the bird in captivity, such practices do occur. Finally the tamenses and trusting nature of this species make it particularly vulnerable to malicious or random shooting. To point out precisely where the few remaining birds on private land occur, through a delineation of critical habitat and publication of locality maps, could enhance the possibility of such vandalism, and thus actually increase the threat to the species. For all of the above reasons, a determination of critical habitat is not prudent for the Florida scrub jay, either on Federal lands or on private lands.

Available Conservation Measures

Conservation measures provided to species listed as endangered or threatened under the Endangered Species Act include recognition, recovery actions, requirements for Federal protection, and prohibitions against certain practices. Recognition through listing encourages and results in conservation actions by Federal, State, and private agencies, groups, and individuals. The Endangered Species Act provides for possible land acquisition and cooperation with the States and requires that recovery actions be carried out for all listed species. Such actions are initiated by the Service following listing. The protection required of Federal agencies and the prohibitions against taking and harm are discussed, in part, below.

Section 7(a) of the Act, as amended, requires Federal agencies to evaluate their actions with respect to any species that is proposed or listed as endangered or threatened and with respect to its critical habitat, if any is being designated. Regulations implementing this interagency cooperation provision of the Act are codified at 50 CFR Part 402, and are now under revision (see proposal at 48 FR 29990; June 29, 1983). Section 7(a)(4) requires Federal agencies to confer informally with the Service on any action that is likely to jeopardize the continued existence of a proposed species or result in destruction or adverse modification of proposed critical habitat. If a species is listed subsequently, section 7(a)(2) requires Federal agencies to ensure that activities they authorize, fund, or carry out are not likely to jeopardize the continued existence of such a species or to destroy or adversely modify its critical habitat. If a Federal action may affect a listed species or its critical habitat, the responsible Federal agency must enter into formal consultation with the Service.

At the present time, the Service knows, of four Federal agencies that may be affected if the scrub jay is listed as a threatened species. These are: (1) The U.S. Fish and Wildlife Service (Merritt Island National Wildlife Refuge), (2) the National Aeronautics and Space Administration (Kennedy Space Center), (3) the U.S. Air Force (Cape Canaveral Air Force Station), and (4) the U.S. Forest Service (Ocala National Forest). Impacts on these agencies, however, are expected to be minimal, and may be summarized as follows:

Merritt Island National Wildlife Refuge/Kennedy Space Center—The largest population of scrub jays occurs in this area; the Refuge includes the lands of the Kennedy Space Center. The Refuge has begun a program of controlling burning of all scrub on land under its jurisdiction. Unless the burning occurs too often, it should help to maintain the suitability of habitat for scrub jays. The Refuge will now need to take the interests of the scrub jay into consideration in its program of controlling burning of scrub. In addition, any expansion of Kennedy Space Center facilities will also need to consider the needs of the scrub jay before being undertaken.

Cape Canaveral Air Force Station—The scrub at this Station has suffered more clearing than at the Merritt Island National Wildlife Refuge. Aerial photos disclose that about 20% of the land on the Station has been cleared in the past several decades. Habitat clearing for construction in the future will need to consider the effect of such clearing on scrub jay populations before being undertaken. Also, it may be necessary to cut or burn existing scrub periodically to maintain its suitability as habitat for the scrub jay.

Ocala National Forest—The scrub jay population is scattered throughout the scrub portions of the Forest. The Forest Service clear-cuts on a rotational basis. This can have a beneficial effect on the scrub jays because it provides a continually changing mosaic of habitat within the forest. Wen scrub in one area becomes too old and dense, scrub jays may move on to colonize another more recently cleared site. Therefore, present Forest Service management practices seem compatible with the well-being of the scrub jay, and only minimal effect on this agency is anticipated.

The Act and implementing regulations found at 50 CFR 17.21 and 17.31 set forth a series of general prohibitions and exceptions that apply to all threatened wildlife. These prohibitions, in part, make it illegal for any person subject to the jurisdiction of the United States to take, import or export, ship in interstate commerce in the course of commercial activity, or sell or offer for sale in interstate or foreign commerce any listed species. It also is illegal to possess, sell, deliver, carry, transport, or ship any such wildlife that had been taken illegally. Certain exceptions apply to agents of the Service and State conservation agencies.

Permits may be issued to carry out otherwise prohibited activities involving threatened wildlife species under certain circumstances. Regulations

governing permits are at 50 CFR 17.22, 17.23, and 17.32. Such permits are available for scientific purposes, to enhance the propagation or survival of the species, and/or for incidental take in connection with otherwise lawful activities. For threatened species, there are also permits for zoological exhibition, educational purposes, or special purposes consistent with the purposes of the Act. In some instances, permits may be issued during a specified period of time to relieve undue economic hardship that would be suffered if such relief were not available. Since the jay is already protected under the Migratory Bird Act, no economic hardship applications are expected.

Public Comments Solicited

The Service intends that any final rule adopted will be accurate and as effective as possible. Therefore, any comments or suggestions from the public, other concerned governmental agencies, the scientific community, industry, or any other interested party concerning any aspect of this proposal are hereby solicited. Comments particularly are sought concerning:

(1) Biological, commercial trade, or other relevant data concerning any threat (or lack thereof) to this species;

(2) The location of any additional populations of this species and the reasons why any habitat should or should not be determined to be critical habitat as provided by Section 4 of the Act;

(3) Additional information concerning the range and distribution of this species;

(4) Current or planned activities in the subject area and their possible impacts on this species.

Final promulgation of the regulation on the Florida scrub jay will take into consideration the comments and any additional information received by the Service, and such communications may lead to adoption of a final regulation that differs from this proposal.

The Endangered Species Act provides for a public hearing on this proposal, if requested. Requests must be filed within 45 days of the date of the proposal. Such requests must be made in writing and addressed to Endangered Species Field Station, U.S. Fish and Wildlife Service, 2747 Art Museum Drive, Jacksonville, Florida 32207.

National Environmental Policy Act

The Fish and Wildlife has determined that an Environmental Assessment, as defined under the authority of the National Environmental Policy Act of 1969, need not be prepared in connection with regulations adopted pursuant to section 4(a) of the Endangered Species Act of 1973, as amended. A notice outlining the Service's reasons for this determination was published in the **Federal Register** on October 25, 1984 (48 FR 49244).

References Cited

Cox, J.A. 1984. Conservation and ecology of the Florida scrub jay. Unpublished Dissertation. Department of Zoology, University of Florida. 185 pp.

Kale, H.W., II. 1978. Rare and endangered biota of Florida. Vol. II. Birds. University of Florida Presses, Gainesville. 121 pp.

Moore, T.S. 1975. First modern record of the scrub jay in Georgia. Oriole, 40:1–2.

Terhune, F.W., ed. 1982. Florida statistical abstract. University of Florida Presses, Gainesville.

Woolfenden, G.E., and J.W. Fitzpatrick. 1984. The Florida scrub jay. Monographs in Population Biology No. 30, Princeton University Press. 406 pp.

Author

The primary author of this proposed rule is John L. Paradiso, Endangered Species Field Station, U.S. Fish and Wildlife Service, 2747 Art Museum Drive, Jacksonville, Florida 32207 (telephone 904/791-2580 or FTS 946-2580).

List of Subjects in 50 CFR Part 17

Endangered and threatened Wildlife, Fish, Marine mammals, Plants (agriculture).

Proposed Regulation Promulgation

PART 17—[AMENDED]

Accordingly, it is hereby proposed to amend Part 17, Subchapter B of Chapter I, Title 50 of the Code of Federal Regulations, as set forth below:

1. The authority citation for Part 17 continues to read as follows:

Authority: Pub. L. 93–205, 87 Stat. 884; Pub. L. 94–359, 90 Stat. 911; Pub. L. 95–632, 92 Stat. 3751; Pub. L. 96–159, 93 Stat. 1225; Pub. L. 97–304, 96 Stat. 1411 (16 U.S.C. 1531 *et seq.*).

2. It is proposed to amend §17.11(h) by adding the following, in alphabetical order under BIRDS, to the List of Endangered and Threatened Wildlife.

§ 17.11 Endangered and threatened wildlife.

* * * * *

(h) * * *

Species		Historic range	Vertebrate population where endangered or threatened	Status	When listed	Critical habitat	Special rules
Common name	Scientific name						
BIRDS							
Jay, Florida scrub	Aphelocoma coerulescens coerulescens.	U.S.A. (FL)	Entire	T		NA	NA

Dated: May 6, 1986.

Susan Recce,

Acting Assistant Secretary for Fish and Wildlife and Parks.

[FR Doc. 86-11365 Filed -5-20-86; 8:45 am]

BILLING CODE -4310-55-M

50 CFR Part 17

Endangered and Threatened Wildlife and Plants; Proposed Determination of Endangered Status and Critical Habitat for the Mount Graham Red Squirrel

AGENCY: Fish and Wildlife Service, Interior.

ACTION: Proposed rule.

SUMMARY: The Service proposes to determine endangered status and critical habitat for the Mount Graham red squirrel (*Tamiasciurus hudsonicus grahamensis*), a small mammal found only in the Pinaleno Mountains of southeastern Arizona. Its isolated habitat has declined over the last century and may face additional losses to logging, recreational development, and construction of an astrophysical observatory. The red squirrel may also be in jeopardy because of its reduced numbers, and through competition with an introduced species of squirrel. This proposal, if made final, would extend the protection of the Endangered Species Act of 1973, as amended, to the Mount Graham red Squirrel and its critical habitat. The Service seeks data and comments from the public.

DATES: Comments must be received by July 21, 1986. Public hearing requests must be received by July 7, 1986.

ADDRESSES: Comments and materials concerning this proposal should be sent to the Regional Director, U.S. Fish and Wildlife Service, P.O. Box 1306, Albuquerque, New Mexico 87103.

Comments and materials received will be available for public inspection, by appointment, during normal business hours at the Service's Regional Office of Endangered Species, 500 Gold Avenue, SW., Room 4000, Albuquerque, New Mexico.

FOR FURTHER INFORMATION CONTACT: Alisa M. Shull, Endangered Species Staff, U.S. Fish and Wildlife Service, P.O. Box 1306, Albuquerque, New Mexico 87103 (505/766-3972 or FTS 474-3972).

SUPPLEMENTARY INFORMATION:

Background

The red squirrel (*Tamiasciurus hudsonicus*) is found in most of Canada and Alaska, and in much of the western and northern parts of the conterminous United States (Hall 1981). It is an arboreal species, and, in the southern extremities of its range, is restricted mainly to montane forests. Its color is grayish brown, tinged with rusty or yellowish along the back. In summer, a dark lateral line separates the light colored underparts from the grayer or browner sides. The ears are slightly tufted in winter, and the tail is bushy (Spicer et al. 1985).

The two most southerly subspecies of the red squirrel are *T. h. mogollonensis*, which is found in much of the high country of Arizona and New Mexico, and *T. h. grahamensis*, the Mount Graham red squirrel, which is known only from the Pinaleno, or Graham, Mountains of Graham County, southeastern Arizona. The latter is slightly smaller than *T. h. mogollonensis*, has a relatively shorter tail, and differs in various skeletal characters. Ten adult specimens averaged 7¾ inches (196.0 millimeters) in head and body length, and 5¼ inches (135.5 millimeters) in tail length (Spicer *et al.* 1985).

The range of the Mount Graham red squirrel lies entirely within the Safford Ranger District of the Coronado National Forest. This squirrel is now found primarily in stands of dense Engelmann spruce (*Picea engelmannii*) and/or fir, especially corkback fir (*Abies lasiocarpa* var. *arizonica*). It now occurs mostly above an elevation of 10,000 feet (3,048 meters), but may also be present down to about 9,400 feet (2,865 meters) in drainages on north-facing slopes and in protected areas. Its diet consists largely of conifer seeds, and during the winter it depends on seed-bearing cones that it has stored at certain sites known as middens. These caches, usually associated with logs, snags, stumps, or a large live tree, are the focal points of individual territories, and the number of midden complexes offers an approximation of the number of resident red squirrels in a particular area. In good spruce-fir habitat in the Pinaleno Mountains, there is a population density of about one red squirrel per 8 acres (3.2 hectares), which is somewhat lower than has been found in most other areas where the species has been studied (Spicer *et al.* 1985).

The Mount Graham red squirrel was described by Allen in 1894, based on three specimens taken that same year on Mount Graham in the Pinaleños. Subsequent reports indicate that the subspecies was common around the turn of the century, but was declining by the 1920's and rare by the 1950's (Hoffmeister 1956). This situation apparently was associated with loss and disruption of forest habitat, and perhaps with competition from an introduced population of the tassel-eared, or Abert's, squirrel (*Sciurus aberti*). From 1958 to 1967, there was only a single report, unconfirmed, of *T. h. grahamensis*, and there was concern that the subspecies had become extinct. Later, however, the continued existence of the Mount Graham red squirrel was verified, and a Service-funded status survey in 1984-1985 located this mammal or its fresh sign at 16 localities in the Pinalenos (Spicer *et al.* 1985).

In both its original Review of Vertebrate Wildlife, published in the **Federal Register** of December 30, 1982 (47 FR 58454-58460), and the revised version, published on September 18, 1985 (50 FR 37958-37967), the Service included the Mount Graham red squirrel in category 2, meaning that information then available indicated that a proposal to determine endangered or threatened status was possibly appropriate, but was not yet sufficiently substantial to biologically support such a proposal. Results of the recent survey have since become available, and provide a substantive basis for a proposed determination of endangered status. Although the squirrel does still survive, its range and numbers have been reduced, and its habitat is jeopardized by a number of factors, including proposed construction of an astrophysical observatory.

Summary of Factors Affecting the Species

Section 4(a)(1) of the Endangered Species Act (16 U.S.C. 1531 *et seq.*) and regulations (50 CFR Part 424) promulgated to implement the listing provisions of the Act set forth the procedures for adding species to the Federal Lists. A species may be determined to be an endangered or threatened species due to one or more of the five factors described in section 4(a)(1). These factors and their application to the Mount Graham red squirrel (*Tamiasciurus hudsonicus grahamensis*) are as follows (information taken from Spicer *et al.* 1985):

A. The Present or Threatened Destruction, Modification, or Curtailment of Its Habitat or Range

The Mount Graham red squirrel has always been naturally restricted to a relatively small area, and its range and numbers have evidently declined during the past century. In 1914 it was considered common above elevations of 8,500 feet (2,590 meters), and was found as low as 6,750 feet (2,057 meters). Feared extinct by the 1960's, it subsequently seemed to make a partial recovery, but probably has not reached its former numbers. It is now seldom found below 9,500 feet (2,900 meters), is nowhere abundant, and appears to be common only in small, scattered patches of the best habitat. Such habitat consists mainly of spruce-fir forest, of which there are 2,240 acres (906 hectares) in the Pinalenos. In this habitat, there is an estimated density of one red squirrel per 8 acres (3.2 hectares), though not all of the spruce-fir forest is uniformly occupied. The red squirrel also inhabits portions of the adjacent Douglas fir (*Pseudotsuga menziesii*)-white fir (*Abies concolor*) forest, of which there are 19,900 acres (8,055 hectares), but only at an estimated density of one individual per 124 acres (50 hectares). The total red squirrel population now in the Pinalenos may well number fewer than 500 individuals, possibly only 300.

Although not precisely documented, the apparent decline of the Mount Graham red squirrel seems to parallel the expansion of logging operations in the Pinalenos. Such activity began in the 1880's and was initially not widespread. By 1933, however, roads had been constructed to the crest of the mountains. By 1973, most of the accessible timber had been cut, thereby reducing the age structure and density of the red squirrel's forest habitat. The extent of future timber harvesting in the

Pinalenos will depend on which alternative in the proposed Coronado National Forest Plan is implemented. The alternatives vary from no harvest to clear cutting of the spruce-fir forest for conversion to livestock forage. The latter procedure could eliminate food sources, midden sites, and cover, and result in a substantial decline of the red squirrel population.

The construction of a major astrophysical facility on Mount Graham has been proposed by Steward Observatory, University of Arizona. This facility would be located within a 3,500-acre (1,416-hectare) area encompassing most of the mountain above 9,400 feet (2,865 meters). It would include up to 18 telescopes, a visitor center, workshops, and other installations.

Additional losses to red squirrel habitat could result from forest fires, road construction and improvement, and recreational developments, and high elevation, including potential picnic areas, campgrounds, and ski facilities. It is not thought that any one of these, or the above, problems could by itself result in rapid extirpation of the Mount Graham red squirrel, but their cumulative effect could be severe over a period of time. Considering the squirrel's low numbers, restricted range, and past history of decline, new potential habitat disturbances may be cause for concern.

B. Overutilization of Commercial, Recreational, Scientific, or Educational Purposes

Tree squirrels (including the red squirrel) are legally hunted in the Pinalenos during October and November. Almost all hunters, however, seek the introduced tassel-eared squirrel. Investigations by the Arizona Game and Fish Department have found no substantial take of the red squirrel, and hunting is not now considered a threat to this species.

C. Disease or Predation

Nothing is known about diseases or parasites of the Mount Graham red squirrel. Other subspecies, however, are susceptible to a variety of diseases, including tularemia and those caused by infectious viruses. Predation is not known to have caused reductions in the red squirrel population of the Pinalenos, but a number of predatory mammals, birds, and reptiles are present in the area.

D. The Inadequacy of Existing Regulatory Mechanisms

Both the Arizona Game and Fish Department and the U.S. Forest Service, which manages the land inhabited by the Mount Graham red squirrel, are aware of the presence of this mammal and the problems it may face. Both agencies have policies and agreements that give some consideration to the welfare of this squirrel. There are, however, of State or Federal laws or regulatons that specifically require protection of the squirrel of its habitat.

E. Other Natural or Manmade Factors Affecting Its Continued Existence

The Mount Graham red squirrel may have suffered through competition with the tassel-eared squirrel, which was deliberately introducted in the Pinalenos from 1941 to 1943. The latter species now occupies nearly all coniferous forest in the area. Although little is known about interaction between these two kinds of squirrel, a number of authorities have suggested that competition has resulted in the exclusion of the red squirrel from habitat with ponderosa pine (*Pinus ponderosa*), to which the tassel-eared squirrel is particularly adapted. This process may have ultimately led to a substantial reduction in the range and numbers of the red squirrel.

The Mount Graham red squirrel has probably been isolated from other populations of *T. hudsonicus* for about 11,000 years. The nearest locality where the species is known to occur is 68 miles (110 kilometers, to the northeast, and is separated by a stretch of arid, unsuitable habitat. There is no possibility of natural immigration or genetic exchange. Because of these factors, and its restricted population size and distribution, the Mount Graham red squirrel is particularly vulnerable to any disturbance that might bring about further declines and weakening of genetic viability.

The decision to propose endangered status for the Mount Graham red squirrel was based on an assessment of the best available scientific information and of past, present, and probable future threats to the species. A decision to take no action would constitute failure to properly classify the Mount Graham red squirrel pursuant to the Endangered Species Act and would exclude this squirrel from protection provided by the Act. A decision to propose only threatened status would not adequately reflect the very small population size and distribution of this squirrel, its history of vulnerability and decline, and the multiplicity of problems that confront it. For the reasons given below, a critical habitat designation is included in this proposal

Critical Habitat

Critical habitat, as defined by section 3 of the Act means: (i) the specific areas within the geographical area occupied by a species, at the time it is listed in accordance with the Act, on which are found those physical or biological features (I) essential to the conservation of the species and (II) that may require special management considerations or protection, and (ii) specific areas outside the geographical area occupied by a species at the time it is listed, upon a determination that such areas are essential for the conservation of the species.

Section 4(a) (3) of the Act requires that critical habitat be designated to the maximum extent prudent and determinable concurrently with the determination that a species is endangered or threatened. Critical habitat proposed for the Mount Graham red squirrel to include three areas in the Coronado National Forest, Graham County, Arizona. These areas are precisely delineated below in the "Proposed Regulations Promulgation" section. The names applied to the areas—Hawk Peak/Mount Graham, Heliograph Peak, and Webb Peak—refer to prominent mountains. The areas have irregular shapes, but cover a total approximately 2,000 acres (800 hectares).

The three designated areas the major known concentration of the Mount Graham red squirrel, and the habitat necessary to its survival, including cover, food sources, nest sites, and midden sites. The winter survival of the red squirrel depends primarily on the availability of seeds of cones stored in middens. Therefore, an environment in which the midden-cached ones will stay cool and moist, and be prevented from opening and losing their seeds, is of critical importance. Such an environment is most often found in dense, shady forest above 10,000 feet (3,048 meters), and at lower elevations on north-facing slopes or in protected pockets and small basins (Spicer *et al.* 1985).

Section 4(b)(8) requires, for any proposed or final regulation that designates critical habitat, a brief description and evaluation of those activities (public or private) that may adversely modify such habitat or may be affected by such designation. As the Mount Graham red squirrel requires dense spruce-fir forest, it woud suffer through activities that destroy such habitat or substantially reduce forest density. Potential activities that could adversely affect the habitat include timber harvesting and recreational development that proceed without adequate consideration of the welfare of the squirrel, and construction of the

proposed astrophysical facility on Mount Graham. Any such activities that take place on national forests would require authorization by the U.S. Forest Service. Since all of the proposed critical habitat of the Mount Graham red squirrel is within a national forest, the activities in question could require appropriate forest Service conferral and/or consultation as described below under "Available Conservation Measures."

Section 4(b)(2) of the Act requires the Service to consider economic and other impacts of designating a particular area as critical habitat. The Service will consider the critical habitat designation for the Mount Graham red squirrel in light of all additional relevant information obtained at the time of final rule.

Available Conservation Measures

Conservation measures provided to species listed as endangered or threatened under the Endangered Species Act include recognition, recovery actions, requirements for Federal protection, and prohibitions against certain practices. Recognition through listing encourages and results in conservation actions by Federal, State, and private agencies, groups and individuals. The Endangered Species Act provides for possible land acquisition and cooperation with the States and requires that recovery actions be carried out for all listed species. Such actions are initiated by the Service following listing. The protection required of Fedeal agencies and the prohibitions against taking and harm are discussed, in part, below.

Section 7(a) of the Act, as amended, requires Fedeal agencies to evaluate their actions with respect to any species that is proposed or listed as endangered or threatened and with respect to its critical habitat, if any is being designated. Regulations implementing this interagency cooperation provision of the Act are codified at 50 CFR Part 402, and are now under revision (see proposal at 48 FR 29990; June 29, 1983). Section 7(a)(4) requires Federal agencies to confer informally with the service on any action that is likely to jeopardize the continued existence of a proposed species or result in destruction or adverse modification of proposed critical habitat. If a species is listed subsequently, section 7(a)(2) requires Federal agencies to ensure that activities they authorize, fund, or carry out are not likely to jeopardize the continued existence of such a species or to destroy or adversely modify its critical habitat. If a Federal action may affect a listed species or its critical habitat, the responsible Federal agency must enter into formal consultation with the Service. Federal activities that may be affected in this regard with respect to the listing of the Mount Graham red squirrel, are described above in the "Critical Habitat" section.

Section 9 of the Act, and implementing regulations found at 50 CFR 17.21, set forth a series of general prohibitions and exceptions that apply to all endangered wildlife. These prohibitions, in part, make it illegal for any person subject to the jurisdiction of the United States to take, import or export, ship in interstate commerce in the course of commercial activity, or sell or offer for sale in interstate or foreign commerce any listed species. It also is illegal to possess, sell, deliver, carry, transport, or ship any such wildlife that has been taken illegally. Certain exceptions apply to agents of the Service and State conservation agencies.

Permits may be issued to carry out otherwise prohibited activities involving endangered wildlife species under certain circumstances. Regulations governing permits are at 50 CFR 17.22 and 17.23. Such permits are available for scientific purposes, to enhance the propagation or survival of the species, and/or for incidental take in connection with otherwise lawful activities. In some instances, permits may be issued during a specified period of time to relieve undue economic hardship that would be suffered if such relief were not otherwise available.

Public Comments Solicited

The Service intends that any final action resulting from this proposal will be as accurate and as effective as possible. Therefore, comments and suggestions regarding any aspect of this proposal are hereby solicited from the public, concerned governmental agencies, the Scientific community, industry, and other interested parties. Comments particularly are sought concerning:

(1) Biological, commercial trade, or other relevant data concerning any threat (or lack thereof) to the subject species;

(2) the location of any additional populations of this species and the reasons why any habitat should or should not be determined to be critical habitat as provided by Section 4 of the Act;

(3) additional information concerning the distribution of this species;

(4) current or planned activities in the involved area and their possible impacts on the subject species; and

(5) any foreseeable economic or other impacts resulting from the proposed designation of the critical habitat.

Final promulgation of the regulations on this species will take into consideration the comments and any additional information received by the Service, and such communications may lead to adoption of final regulations that differ from this proposal.

The Endangered Species Act provides for a public hearing on this proposal, if requested. Requests must be filed within 45 days of the date of the proposal. Such requests must be made in writing and addressed to the Regional Director (see ADDRESSES).

National Environmental Policy Act

The Service has determined that an Environmental Assessment, as defined under the authority of the National Environmental Policy Act of 1969, need not be prepared in connection with regulations adopted pursuant to section 4(a) of the Endangered Species Act of 1973, as amended. A notice outlining the Service's reasons for this determination was published in the **Federal Register** of October 25, 1983 (48 FR 49244).

References Cite

Allen, J.A. 1894. Descriptions of ten new North American mammals, and remarks of others. Bull. Amer. Mus. Nat. Hist. 6:320–321.

Hall, E.R. 1981. The mammals of North America. John Wiley & Sons, New York, 2 vols.

Hoffmeister, D.F. 1956. Mammals of the Graham (Pinaleno) Mountains, Arizona. Amer. Midl. Nat. 55(2):257–288.

Spicer, R.B., J.C. de Vos, Jr., and R.L. Glinski. 1985. Status of the Mount Graham red squirrel, *Tamiasciurus hudsonicus grahamensis* (Allen), of southeastern Arizona. Report to Office of Endangered Species, U.S. Fish and Wildlife Service, Albuquerque, New Mexico, 48 pp.

Author

The primary author of this proposed rule is Alisa M. Shull, Endangered Species Staff, U.S. Fish and Wildlife Service, Albuquerque, New Mexico 87103 (505/766–3972 or FTS 474–3972).

List of Subjects in 50 CFR Part 17

Endangered and threatened wildlife, Fish, Marine mammals, Plants (agriculture).

Proposed Regulations Promulgation

PART 17—[AMENDED]

Accordingly, it is hereby proposed to amend Part 17, Subchapter B of Chapter I, Title 50 of the Code of Federal Regulations, as set forth below:

1. The authority citation for Part 17 continues to read as follows:

Authority: Pub. L. 93–205, 87 Stat. 884; Pub. L. 94–359, 90 Stat. 911; Pub. L. 95–632, 92 Stat. 3751; Pub. L. 96–159, 93 Stat. 1225; Pub. L. 97–304, 96 Stat. 1411 (16 U.S.C. 1531 *et seq.*).

2. It is proposed to amend § 17.11(h) by adding the following, in alphabetical order under "MAMMALS," to the List of Endangered and Threatened Wildlife:

§ 17.11 Endangered and threatened wildlife.

* * * * *

(h) * * *

Species		Historic range	Vertebrate population where endangered or threatened	Status	When listed	Critical habitat	Special rules
Common name	Scientific name						
MAMMALS							
Squirrel, Mount Graham red	*Tamiasciurus hudsonicus grahamensis.*	U.S.A. (AZ)	Entire	E		17.95(a)	NA

3. It is further proposed to amend § 17.95(a) by adding critical habitat of the Mount Graham red squirrel, in the same alphabetical order as the species occurs in § 17.11(h).

§ 17.95 Critical habitat—fish and wildlife.

(a) * * *

* * * * *

Mount Graham Red Squirrel
(Tamiasciurus hudsonicus grahamensis)

Arizona. Areas of land, water, and airspace in the Coronado National Forest, T8S R24E and T9S R24E (Gila and Salt River Meridian), Graham County, with the following components:

1. *Hawk Peak-Mount Graham Area.* The area above the 10,000-foot (3,048-meter) contour surrounding Hawk Peak and Plain View Peak, plus the area above the 9,800-foot (2,987-meter) contour that is south of lines extending from the highest point of Plain View Peak eastward at 90° (from true north) and southwestward at 225° (from true north).

2. *Heliograph Peak Area.* The area on the north-facing slope of Heliograph Peak that is above the 9,200-foot (2,804-meter) contour surrounding Heliograph Peak and that is between a line extending at 15° (from true north) from a point 160 feet (49 meters) due south of the horizontal control station on Heliograph Peak and a line extending northwestward at 300° (from true north) from that same point.

3. *Webb Peak Area.* The area on the east-facing slope of Webb Peak that is above the 9,700-foot (2,957-meter) contour surrounding Webb Peak and that is east of a line extending due north and south through a point 160 feet (49 meters) due west of the horizontal control station on Webb Peak.

The major constituent element is dense stands of mature spruce-fir forest.

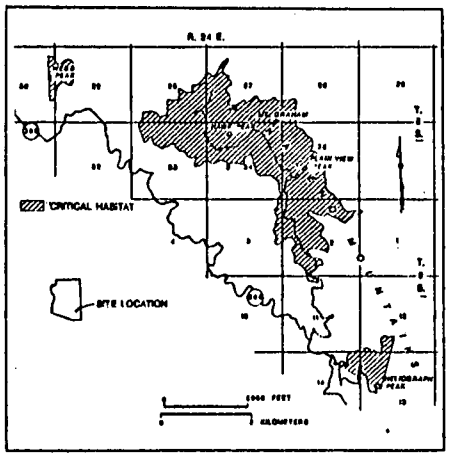

* * * * *

Dated: May 6, 1986.

Susan Recce,

Acting Assistant Secretary for Fish and Wildlife and Parks.

[FR Doc. 86–11366 Filed 5–20–86; 8:45 am]

BILLING CODE 4310-55-M

50 CFR Part 23

Endangered Species, Export; of American Alligators Taken in 1986 and Subsequent Harvest Seasons

AGENCY: Fish and Wildlife Service, Interior.

ACTION: Proposed findings and rule.

SUMMARY: The Convention on International Trade in Endangered Species of Wild Fauna and Flora (CITES) regulates internation trade in certain animal and plant species. As a general rule, exports of animals and plants listed in Appendix II of CITES may occur only if a Scientific Authority (SA) has advised a permit-issuing Management Authority (MA) that such exports will not be detrimental to the survival of the species, and if the MA is satisfied that the animals or plants were not obtained in violation of laws for their protection. This notice announces proposed findings by the SA and MA of the United States on the export of American alligators. The Fish and Wildlife Service (Service) intends to make these findings to cover 1986 and subsequent harvest seasons. The Service now requests comments on these proposed findings and information on the species involved.

DATE: The Service will consider comments received by June 20, 1986 in developing its final findings and rule.

ADDRESS: Please send correspondence concerning this notice to the Office of Scientific Authority, U.S. Fish and Wildlife Service, Washington, DC 20240. Materials received will be available for public inspection from 8:00 a.m. to 4:00 p.m. Monday through Friday, at the Office of the Scientific Authority, room 537, 1717 H Street NW, Washington, DC or at the Federal Wildlife Permit Office, room 621, 1000 N. Glebe Road, Arlington, Virginia.

FOR FURTHER INFORMATION CONTACT:

Scientific Authority Finding—Dr. Charles W. Dane, Office of Scientific Authority, U.S. Fish and Wildlife Service, Washington, DC 20240, telephone (202) 653–5948

Management Authority finding—Mr. Arthur W. Lazarowitz, Federal Wildlife Permit Office, U.S. Fish and Wildlife Service, Washington, DC. 20240, telephone (703)235–2418

Export Permits—Mr. Larry LaRochelle, Federal Wildlife Permit Office, U.S. Fish and Wildlife Service, Washington, DC 20240, telephone (703) 235–1903.

SUPPLEMENTARY INFORMATION: Beginning in 1977, the Service has employed the rulemaking process to develop and issue decisions on the export of certain species under CITES. The reason for this approach is that it is more effective to issue general decisions

in the export of all specimens harvested in a given State and seasons than to issue such decisions separately for each export permit application. This is true especially for CITES Appendix II species that are frequently exported, such as the American alligator (*Alligator mississippiensis*). This notice concerns proposed export findings on American alligators (hides, meat, and other parts) harvested in the 1986 and subsequent harvest seasons from the States of Flordia, Louisiana, and Texas.

Scientific Authority (SA) Findings

Article IV of CITES requires that an export permit for any specimen of a species included in Appendix II shall only be granted when certain findings have been made by the SA and MA of the exporting country. The SA must advise "that such export will not be detrimental to the survival of that species" before a permit can be granted.

The SA for the United States must develop such advice on nondetriment for the export of Appendix II animals in accordance with section 8A of the Endangered Species Act of 1973, as amended in 1982. The Act states that the Secretary of the Interior "shall base the determinations and advice given by him under Article IV of the Convention with respect to wildlife upon the best available biological information derived from professsionally accepted wildlife management practices; but is not required to make, or require any State to make, estimates of population size in making such determinations or giving such advice."

The American alligator is listed in Appendix II to respond both to problems of potential threat to the survival of American alligators [CITES Article II.2(a)] and similarity in appearance to other crocodilians that are threatened with possible extinction [CITES Article II.2(b)]. The Regional 10-year review of the appendices confirmed the suitability of this treatment, as set forth in the proposal that the Conference of the Parties adopted in 1979 to transfer this species to Appendix II. The Service will address the issue of similarity in appearance through tagging of hides and documentation of shipments of meat and parts. Inasmuch as the alligator is listed partly because of a potential threat to its survival (based on previous population declines that have been reversed in most parts of its range in the United States), the Service also must determine if exports will not be detrimental to the survival of the American alligator itself.

Guidelines developed for SA advice on exports of alligators under the provisions of CITES Article II.2(a) have been revised to conform with the 1982 amendments to the Endangered Species Act (see 48 FR 16494, April 18, 1983). They are as follows:

A. Minimum requirements for biological information:

(1) Information on the condition of the population, including trends (the method of determination to be a matter of State choice), and population estimates where such information is available.

(2) Information on total harvest of the species, each harvest season.

(3) Information on distribution of harvest.

(4) Habitat evaluation.

B. Minimum requirements for a management program:

(1) There should be a controlled harvest with methods and seasons to be a matter of State choice.

(2) All hides, meat, and parts should be registered and marked accordingly.

(3) Harvest level objectives should be determined annually by the States.

In applying these guidelines, the Service considers the following types of information on the condition of the population: (a) A current estimate (if such information is available) of the total number of animals in the preharvest population derived by extrapolating the number of animals per unit area in each of the major habitat types to obtain an estimate of the total number of animals where the number of animals per unit area is determined by direct count, by indirect indications of abundance in the State, or by population modeling; (b) a description of ongoing research being conducted to assess the distribution, abundance, or general condition of the species in the State, with a summarization of results obtained, including results of any analyses of age structure or reproductive parameters; and (c) an assessment of long-term poopulation trends of the species in the State, and the relationship of these trends to habitat condition, management practices, harvest pressure, and/or other factors.

Information on anticipated harvest to be considered by the Service should include: (a) The number of animals (by county or game management unit, if data are available at these local levels) to be harvested; (b) the number of alligator hunters expected to be licensed; and (c) the time of the harvest season.

In the case of the alligator, as with most other wild animals, the resource is monitored by a variety of techniques that yield information used in evaluating the condition of a population. As these data are accumulated over time, they reflect trends and call attention to changes in the populations. Habitat information, indices of population size, age and sex structure, and harvest information, are all used to evaluate population status. Although the Endangered Species Act Amendments of 1982 provide that population estimates are not to be required for the approval of export of Appendix II wildlife, if such estimates are provided by the States or available from other sources, the Act requires the Service to consider them. If available, population estimates will be considered together with information of the types listed above in making findings on nondetriment.

Based on the accumulated information on population condition, management, and harvest of the species addressed by this notice, the Service proposes to issue SA advice in favor of alligator export from certain States, identified below. The information on which the Service bases its proposed findings is contained in documents from each State. Due to their length, details of these documents are not published in the **Federal Register**; they are available for public inspection at the Office of Scientific Authority (address given above).

The status of the American alligator has dramatically improved throughout its range over the last 10 years. One of the primary reasons for this improvement has been the effective management programs run by State wildlife agencies in Florida, Louisiana, and Texas. The Service expects these management programs to continue to be effective in conserving the American alligator in the future, and the Service will work closely with these States to address any problem that may arise at a later date. The Service's monitoring efforts will enable the Service to assess the continued validity of these nondetriment findings.

Management Authority (MA) Findings

Exports of Appendix II species are to be allowed under CITES only if an SA has advised that the exports are not detrimental to the survival of the species and if the MA is satisfied that the specimens were not obtained in contravention of laws for the protection of the wildlife or plants. The Service, therefore, must be satisfied that alligator hides, meat, or parts were not obtained in violation of State or Federal law in order to allow export. The Service requires the State tagging program to apply locking nylons tags with embossed legends to legally harvested alligator hides as evidence of compliance with CITES regulations (50 CFR 17.42(A)).

The Service will supply suitable export tags free of charge for alligators harvested during the period covered by

these proposed findings, or each State may use its own Service-approved tags if they meet the tag requirements described in the export guidelines below.

The Service has adopted the following MA export guidelines (49 FR 1058; January 9, 1984) for the export of hides. The guidelines for the export of meat and parts are being proposed for the first time.

(1) Current State hunting, trapping, tagging, selling, and shipping regulations and sample hide export tag and "parts tag" must be on file with the Service (Federal Wildlife Permit Office);

(2) Hide export—

(a) The hide export tag must be durable and permanently locking, and must show State of origin, year of take, species, and be serially unique;

(b) The hide export tage must be applied to all hides within a minimum time after take, as specified by the State, and such time should be as short as possible to minimize movement of untagged hides;

(c) The hide export tag must be permanently attached as authorized and prescribed by the State;

(d) State-registered dealers or State-licensed takers allowed by the State to attach tags must account for tags received and must return unused tags to the State within a specified time after taking season closes; and

(e) Fully manufactured hide products may be exported from the United States when accompanied by State hide export tags removed from hides contained in the products; such tags must be surrendered to the Service prior to export.

(3) Meat export—

Meat from legally harvested and tagged alligators is to be packed in uniform containers, permanently sealed and labeled as required by State law. Bulk meat is to be marked with a State "parts tag" permanently attached. Container label or "parts tag" should indicate, as a minimum, State of origin, year of take, species, weight of package or unit, identification of State licensed harvester, and identification of State licensed processor or packer.

(4) Parts export—

Large individual parts should have a "parts tag" permanently attached, while smaller parts may be packed with a "parts tag" permanently attached to the package.

Alligator skulls should carry a "parts tag" and be marked with the original U.S.-CITES export tag number, as required by State law.

"Parts tags" used for alligator parts should supply the same information as described for such tags used to mark alligator meat.

Proposed Export Decisions

The Service proposes to approve exports of alligators (hides, meat, and other parts) harvested in 1986 and subsequent taking seasons in Florida, Louisiana, and Texas on the grounds that both SA and MA guidelines are satisfied.

Multiyear Findings

From monitoring existing State programs for the American alligator in Florida, Louisiana, and Texas, the Service expects these States will continue to satisfy CITES requirements. States seeking for the first time to establish a harvest program for alligators should apply for CITES export approval no later than January 31 of the year they plan to initiate such a program. To ensure that export-approved States maintain successful programs and that export is not detrimental to the survival of the species, the Service plans to continue annual monitoring of State management and export marking programs through evaluation of annual reports from the States (and export reports from the ports).

Comments Solicited

The Service requests comments on these proposed findings. Final findings will take into consideration the comments and any additional information received, and such consideration might lead to final findings that differ from this proposal.

This proposal is issued under authority of the Endangered Species Act of 1973, as amended (16 U.S.C. 1531 et seq.). The primary authors are Dr. Richard M. Mitchell, Office of Scientific Authority, and S. Ronald Singer, Federal Wildlife Permit Office.

Note.—The Department has determined that these proposed findings are not a major Federal action significantly affecting the quality of the human environment under the National Environmental Policy Act and, therefore, the preparation of an Environmental Impact Statement is not required. (A determination on whether final findings are a major Federal action significantly affecting the quality of the human environment will be made before the final findings are published.) The Department also has determined that this is not a major rule under Executive Order 12291 and does not have a significant economic effect on a substantial number of small entities under the Regulatory Flexibility Act (5 U.S.C. 601). Because this rule treats exports on a State-by-State basis and proposes to approve export in accordance with a State management program, this rule will have little effect on small entities in and of itself. This proposed rule does not contain any recordkeeping or information collection requirements as defined by the Paperwork Reduction Act of 1980.

List of Subjects in 50 CFR Part 23

Endangered and threatened wildlife, Exports, Fish, Imports, Plants (agriculture), Treaties.

PART 23—ENDANGERED SPECIES CONVENTION

Accordingly, the Service proposes to amend Part 23 of Title 50, Code of Federal Regulations, as set forth below:

1. The authority citation for Part 23 continues to read as follows:

Authority: Convention on International Trade in Endangered Species of Wild Fauna and Flora, TIAS 8249; and Endangered Species Act of 1973, 87 Stat. 884, 16 U.S.C. 1531–43.

2. In § 23.57, add new paragraph (g) to read as follows:

§ 23.57 American alligator (Alligator mississippiensis).

* * * * *

(g) 1986 and subsequent harvests: Florida, Louisiana, and Texas.

Condition on export: Each hide must be clearly identified as to species, State or origin, and season of taking, and must be tagged by a permanently attached, serially numbered tag of a type approved by the Service that is attached under conditions established by the Service. Fully manufactured hide products may be exported from the United States when accompanied by State hide export tags removed from hides contained in the products; these tags must be surrendered to the Service prior to export.

Meat from legally harvested and tagged alligators is to be packed in uniform containers, permanently sealed and labeled as required by State law. Bulk meat is to be marked with a State "parts tag" permanently attached indicating, at a minimum, State of origin, year of take, species, weight of package or unit, identification of State licensed harvester, and identification of State licensed processor or packer.

Large individual parts should have a "parts tag" permanently attached, while smaller parts may be packed with a "parts tag" permanently attached to the package. Alligator skulls should carry a "parts tag" and be marked with the original U.S.-CITES export tag number, and other markings, as required by State law. "Parts tags" should supply the same information as described for such tags used to mark "alligator meat.

Dated: April 30, 1986.

P. Daniel Smith,

Deputy Assistant Secretary for Fish and Wildlife and Partks.

[FR Doc. 86–11369 Filed 5–20–86; 8:45 am]

BILLING CODE 4310–55–M

DEPARTMENT OF COMMERCE

National Oceanic and Atmospheric Administration

50 CFR Part 654

Fishery Conservation and Management; Stone Crab Fishery of the Gulf of Mexico; Correction

AGENCY: National Marine Fisheries Service (NMFS), NOAA, Commerce.

ACTION: Notice of availability of an amendment to a fishery management plan; correction.

SUMMARY: This document corrects the date for submitting comments on Amendment 3 to the Fishery Management Plan for the Stone Crab Fishery that was published May 8, 1986, 51 FR 17075.

FOR FURTHER INFORMATION CONTACT: Donald W. Geagan, Regional Plan Coordinator, 813-893-3722.

SUPPLEMENTARY INFORMATION: In FR Doc. 86-10394, page 17075, column two under the "DATE" heading, the sentence is corrected to read "Comments on the FMP revisions should be submitted on or before July 18, 1986."

Dated: May 16, 1986.

Carmen J. Blondin,

Deputy Assistant Administrator for Fisheries Resource Management, National Marine Fisheries Service.

[FR Doc. 86-11396 Filed 5-20-86; 8:45 am]

BILLING CODE 3510-22-M

Notices

Federal Register
Vol. 51, No. 98
Wednesday, May 21, 1986

This section of the FEDERAL REGISTER contains documents other than rules or proposed rules that are applicable to the public. Notices of hearings and investigations, committee meetings, agency decisions and rulings, delegations of authority, filing of petitions and applications and agency statements of organization and functions are examples of documents appearing in this section.

ADMINISTRATIVE CONFERENCE OF THE UNITED STATES

Use of Private Attorneys by Federal Agencies

AGENCY: Administrative Conference of the United States.

ACTION: Notice of public hearing.

SUMMARY: The Administrative Conference is studying the use of private attorneys by federal agencies and departments. The study will include a survey of current agency policy and practice, an examination of the relevant law, and consideration of possible recommendations. To aid the Conference and its Committee on Governmental Processes in evaluating the issues involved in this study, the Conference will conduct a public hearing. The public hearing will take place on Thursday, May 29, 1986, in courtroom 10 of the United States Claims Court, 717 Madison Place, NW., Washington, D.C., commencing at 9:30 AM. Conference Chairman Marshall J. Breger will preside at the hearing.

Brief initial statements of views or relevant experiences will be followed by opportunities for questioning by the Chairman and Conference members in attendance. If time permits, witnesses may exchange views or reactions. The Conference is particularly interested in obtaining information and advice on the following questions:

1. Are there circumstances under which federal government agencies should retain the services of attorneys in private practice?

2. Are there circumstances under which federal government agencies have retained the services of private attorneys, where ensuing problems made this an unwise or inefficient decision?

3. Is greater oversight needed for hiring of private attorneys by agencies? Should there be centralized control of the hiring of private attorneys, located in the Department of Justice or elsewhere in the federal government?

4. Should there be uniform procedures among the agencies for the hiring of private attorneys? Are written guidelines needed? Is a formal competitive bidding process necessary?

5. Should there be a fixed limit on hourly fees?

6. Are there problems of professional responsibility relating specially to private attorneys hired by federal agencies.

7. Is there a "revolving door" problem, where an agency retains attorneys who have recently left service with the same agency?

A number of public officials and other public figures have been invited to appear at the hearing to discuss their views. Other persons may be allowed to make presentations if time permits. Persons wishing to testify should notify the Office of the Chairman of the Conference at least one day in advance, indicating the nature of their experience and an outline of the planned testimony. It would be helpful to the Conference for witnesses to submit written statements prior to the hearing. However, written statements pertinent to the subject of the hearing may be submitted at any time, before or after the hearing, by any person whether or not appearing at the hearing.

DATE: May 29, 1986.

Location: The public hearing will be held in courtroom 10 of the U.S. Claims Court, 717 Madison Place, NW, Washington, DC, at 9:30 AM.

Public Participation: Attendance at the meeting is open to the public, but limited to the space available. Persons wishing to attend should notify the contact person at least one day in advance. The committee chairman may permit members of the public to make oral statements at the meeting. Written statements may be submitted to the committee at any time.

FOR FURTHER INFORMATION CONTACT: David M. Pritzker, Administrative Conference of the United States, 2120 L Street NW, Suite 500, Washington, DC 20037; telephone (202) 254-7065.

Dated: May 16, 1986.

Richard K. Berg,

General Counsel.

[FR Doc. 86-11507 Filed 5-20-86; 8:45 am]

BILLING CODE 6110-01-M

DEPARTMENT OF AGRICULTURE

Forms Under Review by Office of Management and Budget

May 16, 1986.

The Department of Agriculture has submitted to OMB for review the following proposals for the collection of information under the provisions of the Paperwork Reduction Act (44 U.S.C. Chapter 35) since the last list was published. This list is grouped into new proposals, revisions, extensions, or reinstatements. Each entry contains the following information:

(1) Agency proposing the information collection; (2) Title of the information collection; (3) Form number(s), if applicable; (4) How often the information is requested; (5) Who will be required or asked to report; (6) An estimate of the number of responses; (7) An estimate of the total number of hours needed to provide the information; (8) An indication of whether section 3504(h) of Pub. L. 96-511 applies; (9) Name and telephone number of the agency contact person.

Questions about the items in the listing should be directed to the agency person named at the end of each entry. Copies of the proposed forms and supporting documents may be obtained from: Department Clearance Officer, USDA, OIRM, Room 404-W Admin. Bldg., Washington, DC 20250, (202) 447-2118

Comments on any of the items listed should be submitted directly to: Office of Information and Regulatory Affairs, Office of Management and Budget, Washington, DC 20503, Attn: Desk Officer for USDA.

If you anticipate commenting on a submission but find that preparation time will prevent you from doing so promptly, you should advise the OMB Desk Officer of your intent as early as possible.

Revision

- *Agricultural Stabilization Conservation Service*

7 CFR Part 729/446—Poundage Quota and Marketing Regulations for the 1986 Through 1990 Crops of Peanuts

ASCS-101, -1002, -1007, -1008, -1010, -1012, -1030

On occasion

Farms; 638,715 responses; 159,469 hours; not applicable under 3504(h)
Paul P. Kume, (202) 447-9003

● *Agricultural Stabilization Conservation Service*

7 CFR Part 1427—Cotton and Seed Cotton Loan Program Regulations
CCC Cotton A, -A1, -A2, CCC-679, -813, -813-1, -813-2, -833, -837, -877, -879, -881, -881-1
Annually
Individuals or households; Farms; Businesses or other for-profit,
728,280 responses; 182,070
Joy C. Guest, (202) 447-8223.

Reinstatement

● *Rural Electrification Administration*

Statement of Construction, Telephone System-Outside Plant
REA 527
On occasion
Small businesses or organizations; 200 responses; 200 hours; not applicable under 3504(h)
John D. Soma, (202) 382-8529.

Jane A. Benoit,
Departmental Clearance Officer.
[FR Doc. 84-11438 Filed 5-20-86; 8:45 am]
BILLING CODE 3410-01-M

Office of the Secretary

Privacy Act; Systems of Records

AGENCY: Office of the Secretary, USDA.

ACTION: Notice of deletion of Privacy Act Systems of Record.

SUMMARY: Notice is hereby given that USDA is deleting three systems of records maintained by the Foreign Agricultural Service, USDA. These systems of records are no longer operational.

EFFECTIVE DATE: May 21, 1986.

FOR FURTHER INFORMATION CONTACT: Director, Personnel Division, Management, Foreign Agricultural Service, U.S. Department of Agriculture, Washington, DC 20250.

SUPPLEMENTARY INFORMATION: USDA hereby deletes three systems of records, USDA/FAS-1, "Applicant Files for Employment with International Organizations;" USDA/FAS-2, "Cooperator Employee Data; and USDA/FAS-3, "Visa and Passport Clearance Information Data."

Signed at Washington, DC on May 15, 1986.

Richard E. Lyng,
Secretary of Agriculture.
[FR Doc. 86-11437 Filed 5-20-86; 8:45 am]
BILLING CODE 3410-01-M

COMMISSION ON CIVIL RIGHTS

Hearing on the Protection of Handicapped Newborns

Notice is hereby given pursant to the provision of the Civil Rights Act of 1983, Pub. L. 98-183, 97 Stat. 1304, that a public hearing before a subcommittee of the U.S. Commission on Civil Rights will be held on June 26, beginning at 1:30 p.m. and June 27, beginning at 9:30 a.m., in the fifth floor conference room at the U.S. Commission on Civil Rights; 1121 Vermont Avenue, NW., Washington, DC.

The purpose of the hearing is to hear testimony about civil rights issues affecting handicapped newborns.

The Commission is an independent, bipartisan factfinding agency authorized to study, collect, and disseminate information and to appraise the laws and policies of the Federal government with respect to discrimination or denials of equal protection of the laws under the Constitution because of race, color, religion, sex, age, handicap, or national origin, or in the administration of justice.

Dated at Washington, DC, May 16, 1986.

Clarence M. Pendleton, Jr.,
Chairman.
[FR Doc. 86-11430 Filed 5-20-86; 8:45 am]
BILLING CODE 6335-01-M

DEPARTMENT OF COMMERCE

Foreign-Trade Zones Board

[Docket No. 16-86]

Proposed Foreign-Trade Zone; West Sacramento, Yolo County, CA; Application and Public Hearing

An application has been submitted to the Foreign-Trade Zones Board (the Board) by the Sacramento-Yolo Port District (the Port), a political subdivision of the State of California, requesting authority to establish a general-purpose foreign-trade zone in West Sacramento, Yolo County, California, within the San Francisco-Oakland Customs port of entry. The application was submitted pursuant to the provisions of the Foreign-Trade Zones Act, as amended (19 U.S.C. 81a-81u), and the regulations of the Board (15 CFR Part 400). It was formally filed on May 8, 1986. The applicant is authorized to make this proposal under section 6302 of the Government Code of California.

The proposed foreign-trade zone involves a 16-acre parcel within the Port's 500-acre terminal complex at Wharf No. 2, Terminal St. and Industrial Blvd. An existing warehouse is available for inital zone activity and additional facilities are planned. The zone will be operated by the Port.

The application contains evidence of the need for zone services in the Sacramento area. Specific interest has been expressed for activity involving the storage and distribution of machines and machinery parts. No manufacturing approvals are being sought at this time. Such requests would be made to the Board on a case-by-case basis.

In accordance with the Board's regulations, an examiners committee has been appointed to investigate the application and report to the Board. The committee consists of: Dennis Puccinelli (Chairman), Foreign-Trade Zones Staff, U.S. Department of Commerce, Washington, DC 20230; Paul R. Andrews, District Director, U.S. Customs Service, Pacific Region, 555 Battery St., San Francisco, CA 94126; and Colonel Wayne J. Scholl, District Engineer, U.S. Army Engineer District Sacramento, 670 Capitol Mall, Sacramento, CA 95814.

As part of its investigation, the examiners committee will hold a public hearing on June 19, 1986, beginning at 9:00 a.m., in the Sacramento City Council Chambers, 915 "I" Street, Sacramento.

Interested parties are invited to present their views at the hearing. Persons wishing to testify should notify the Board's Executive Secretary in writing at the address below or by phone (202/377-2862) by June 12. Instead of an oral presentation, written statements may be submitted in accordance with the Board's regulations to the examiners committee, care of the Executive Secretary, at any time from the date of this notice through July 21, 1986.

A copy of the application and accompanying exhibits will be available during this time for public inspection at each of the following locations:

Port Executive Offices, Port of Sacramento, World Trade Center, 2101 Stone Blvd., West Sacramento, CA 95691.
Office of the Executive Secretary, Foreign-Trade Zones Board, U.S. Department of Commerce, Room 1529, 14th and Pennsylvania Ave., NW., Washington, DC 20230.

Dated: May 15, 1986.

John J. Da Ponte, Jr.,
Executive Secretary.
[FR Doc. 86-11433 Filed 5-20-86; 8:45 am]
BILLING CODE 3510-DS-M

International Trade Administration

[A-351-505]

Antidumping Duty Order: Malleable Cast Iron Pipe Fittings From Brazil

AGENCY: International Trade Administration Import Administration, Department of Commerce.

ACTION: Notice.

SUMMARY: In an investigation concerning malleable cast iron pipe fittings (pipe fittings) from Brazil, the United States Department of Commerce (the Department) and the United States International Trade Commission (the ITC) have determined that pipe fittings from Brazil are being sold at less than fair value and that sales of pipe fittings from Brazil are materially injuring a United States industry. Therefore, based on these findings, all unliquidated entries, or warehouse withdrawals, for consumption of pipe fittings from Brazil made on or after January 14, 1986, the date on which the Department published its "Preliminary Determination" notice in the **Federal Register,** will be liable for the possible assessment of antidumping duties. Further, a cash deposit of estimated antidumping duties must be made on all such entries, and withdrawals from warehouse, for consumption made on or after the date of publication of this antidumping duty order in the **Federal Register.**

EFFECTIVE DATE: May 21, 1986.

FOR FURTHER INFORMATION CONTACT: Mary J. Jenkins or John Brinkmann, Office of Investigations, International Trade Administration, United States Department of Commerce, 14th Street and constitution Avenue, NW., Washington, DC 20230; telephone: (202) 377-1756 or 377-3965, respectively.

SUPPLEMENTARY INFORMATION: The merchandise covered by this order is certain malleable cast iron pipe fittings, currently classifiable in *Tariff Schedules of the United States Annotated* (TSUSA) under item numbers 610.7000 and 610.7400.

In accordance with section 733 of the Tariff Act of 1930, as amended (the Act) (19 U.S.C. 1673b), on January 14, 1986, the Department published its preliminary determination that there was reason to believe or suspect that pipe fittings from Brazil were being sold at less than fair value (51 FR 1544). On March 31, 1986, the Department published its final determination that these imports were being sold at less than fair value (51 FR 10897)

On May 12, 1986, in accordance with section 735(d) of the Act (19 U.S.C. 1673(d)), the ITC notified the Department that such importations materially injure a United States industry.

Therefore, in accordance with sections 736 and 751 of the Act (19 U.S.C. 1673e and 1675), the Department directs United States Customs officers to assess, upon further advice by the administering authority pursuant to section 736(a)(1) of the Act (19 U.S.C. 1673e(a)(1)), antidumping duties equal to the amount by which the foreign market value of the merchandise exceeds the United States price for all entries of pipe fittings from Brazil. These antidumping duties will be assessed on all unliquidated entries of pipe fittings entered, or withdrawn from warehouse, for consumpton on or after January 14, 1986, the date on which the Department published its "Preliminary Determination" notice in the **Federal Register.**

On and after the date of publication of this notice, United States Customs officers must require, at the same time as importers would normally deposit estimated duties on this merchandise, a cash deposit equal to the estimated weighted-average antidumping duty margins as noted below:

Manufacturers/Producers/Exporters	Weighted-average (Percent)
Fundicao Tupy S.A.	5.64
All other manufacturers Producers/Exporters	5.64

This determination constitutes an antidumping duty order with respect to pipe fittings from Brazil, pursuant to section 736 of the Act (19 U.S.C. 1673e) and section 353.48 of the Commerce Regulations (19 CFR 353.48). We have deleted from the Commerce Regulations, Annex I of 19 CFR Part 353, which listed antidumping findings and orders currently in effect. Instead, interested parties may contact the Office of Information Services, Import Administration, for copies of the updated list of orders currently in effect.

This notice is published in accordance with section 736 of the Act (19 U.S.C. 1673e) and § 353.48 of the Commerce Regulations (19 CFR 353.48).

Gilbert B. Kaplan,

Deputy Assistant Secretary for Import Administration.

May 16, 1986.

[FR Doc. 86-11431 Filed 5-20-86; 8:45 am]

BILLING CODE 3510-DS-M

[A-570-503]

Antidumping Duty Order: Certain Steel Wire Nails From the People's Republic of China

AGENCY: International Trade Administration, Import Administration, Department of Commerce.

ACTION: Notice.

SUMMARY: In its investigation, the United States Department of Commerce determined that certain steel wire nails (nails) from the People's Republic of China (PRC) were being sold at less than fair value within the meaning of the antidumping duty law.

In a separate investigation, the United States International Trade Commission (the ITC) determined that nails from the PRC are materially injuring a United States industry. Therefore, based on these findings, all unliquidating entries, or withdrawals from warehouse, for consumption of nails from the PRC made on or after January 9, 1986, the date on which the Department published its "Preliminary Determination" notice in the **Federal Register,** will be liable for the possible assessment of antidumping duties. Further, a cash deposit of estimated antidumping duties must be made on all such entries, and withdrawals from warehouse, for consumption made on or after the date of publication of this antidumping duty order in the **Federal Register.**

EFFECTIVE DATE: May 21, 1986.

FOR FURTHER INFORMATION CONTACT: Charles Wilson, Office of Investigations, International Trade Administration, United States Department of Commerce, 14th Street and Constitution Avenue, NW., Washington, DC 20230; telephone: (202) 377-5288.

SUPPLEMENTARY INFORMATION: The products under investigation are steel wire nails from the PRC. These nails are: one-pice steel wire nails as currently provided for in the *Tariff Schedules of the United States* (TSUS) under item numbers 646.25 and 646.26, and similar steel wire nails of one-piece construction, whether at, over or under 0.065 inch in diameter as provided for in item number 646.3040 of the *Tariff Schedules of the United States Annotated* (TSUSA); two-piece steel wire nails provided for in item number 646.32 of the TSUS; and steel wire nails with lead heads provided for in item number 646.36 of the TSUS.

In accordance with section 733 of the Tariff Act of 1930, as amended (the Act)

(19 U.S.C. 1673b), on January 9, 1986, the Department published its preliminary determination that there was reason to believe or suspect that steep wire nails were being sold at less than fair value (51 FR 1025). On March 25, 1986, the Department published its final determination that these imports were being sold at less than fair value (51 FR 10247).

On May 8, 1986, in accordance with section 735(d) of the Act (19 U.S.C. 1763d(d)), the ITC notified the Department that such importations materially injure a United States industry.

Therefore, in accordance with section 736 of the Act (19 U.S.C. 1673e), the Department directs United States Customs officers to assess, upon further advice by the administering authority pursuant to section 736(a)(1) of the Act (19 U.S.C. 1673e(a)(1)), antidumping duties equal to the amount by which the foreign market value of the merchandise exceeds the United States price for all entries of nails from the PRC. These antidumping duties will be assessed on all unliquidated entries of nails entered, or withdrawn from warehouse, for consumption on or after January 9, 1986, the date on which the Department published its "Preliminary Determination" notice in the **Federal Register** (51 FR 1025).

On and after the date of publication of this notice, United States Customs officers must require, at the same time as importers would normally deposit estimated duties on this merchandise, a cash deposit equal to the estimated weighted-average antidumping duty margins as noted below:

Manufacturers/Producers/Exporters	Weighted-average margins (percent)
All Manufacturers, Producers, Exporters	6.33

This determination constitutes an antidumping order with respect to nails from the PRC, pursuant to section 736 of the Act (19 U.S.C. 1673e) and section 353.48 of the Commerce Regulations (19 CFR 353.48). We have deleted from the Commerce Regulations, Annex I of 19 CFR Part 353, which listed antidumping findings and orders currently in effect. Instead, interested parties may contact the Office of Information Services, Import Administration, for copies of the updated list of orders currently in effect.

This notice is published in accordance with section 736 of the Act (19 U.S.C. 1673e) and § 353.48 of the Commerce Regulations (19 CFR 353.48).

Gilbert B. Kaplan,

Deputy Assistant Secretary for Import Administration.

May 14, 1986.

[FR Doc. 86-11432 Filed 5-20-86; 8:45 am]

BILLING CODE 3510-05-M

Telecommunications Equipment, Technical Advisory Committee; Partially Closed Meeting

A meeting of the Telecommunications Equipment Technical Advisory Committee will be held June 3, 1986, 9:00 a.m., Herbert C. Hoover Building, Room 3708, 14th Street and Constitution Avenue, NW., Washington, DC. The Committee advises the Office of Technology and Policy Analysis with respect to technical questions that affect the level of export controls applicable to telecommunications and related equipment or technology.

Agenda

1. Introduction of members and attendees.
2. Review and approval of the minutes of April 14, 1986 meeting.
3. Presentation of papers or comments by the public.
4. Subcommittee Reports:
   a. Personnel.
   b. Work Program.
   c. Status/progress.
5. General Discussion and Adjourn.

Executive Session

6. Discussion of matters properly classified under Executive Order 12356, dealing with the U.S. and COCOM control program and strategic criteria related thereto.

The general session of the meeting will be open to the public and a limited number of seats will be available. To the extent time permits, members of the public may present oral statements to the Committee. Written statements may be submitted at any time before or after the meeting. This meeting is called on short notice because of the need to obtain and consider the Committee's advice on proposals to revise the multilateral COCOM list.

The Assistant Secretary for Administration, with the concurrence of the delegate of the General Counsel, formally determined on January 10, 1986, pursuant to section 10(d) of the Federal Advisory Committee Act, as amended by section 5(c) of the Government in the Sunshine Act, Pub. L. 94-409, that the matters to be discussed in the Executive Session should be exempt from the provisions of the Federal Advisory Committee Act relating to open meetings and public participation therein, because the Executive Session will be concerned with matters listed in 5 U.S.C. 552b(c)(1) and are properly classified under Executive Order 12356.

A copy of the Notice of Determination to close meetings or portions thereof is available for public inspection and copying in the Central Reference and Records Inspection Facility, Room 6628, U.S. Department of Commerce, Telephone: (202) 377-4217. For further information or copies of the minutes, call (202) 377-4959.

Dated: May 16, 1986.

Margaret A. Cornejo,

Director, Technical Support Staff, Office of Technology and Policy Analysis.

[FR Doc. 86-11434 Filed 5-20-86; 8:45 am]

BILLING CODE 3510-DT-M

[A-588-501]

Antidumping Duty Order; Offshore Platform Jackets and Piles From Japan

AGENCY: International Trade Administration, Import Administration, Department of Commerce.

ACTION: Notice.

SUMMARY: In an investigation concerning offshore platform jackets and piles (jackets and piles) from Japan, the United States Department of Commerce (the Department) and the United States International Trade Commission (the ITC) have determined that jackets and piles from Japan are being sold at less than fair value and that sales of jackets and piles from Japan are materially injuring two United States industries. Therefore, based on these findings, all unliquidated entries, or warehouse withdrawals, for consumption of jackets and piles from Japan made on or after November 25, 1985, the date on which the Department published its "Preliminary Deterination" notice in the **Federal Register**, will be laible for the possible assessment of antidumping duties. Further, a cash deposit of estimated antidumping duties must be made on all such entries, and withdrawals from warehouse, for consumption made on or after the date of publication of this antidumping duty order in the **Federal Register**.

EFFECTIVE DATE: May 21, 1986.

FOR FURTHER INFORMATION CONTACT: Frank Crowe or John Brinkmann, Office of Investigations, International Trade Administration, United States Department of Commerce, 14th Street and Constitution Avenue, N.W.,

Washington, DC 20230; telephone: (202) 377–4087 ro 377–3965, respectively.

SUPPLEMENTARY INFORMATION: The products covered by this investigation are steel jackets (templates) and/or piles for offshore platforms, subassemblies thereof that do not require removal from a transportation vessel and further U.S. onshore assembly, and appurtenances attached to the jackets and piles. These products constitute the supporting structures which permanently affix offshore drilling and/or production platforms to the ocean floor. These products are used for "conventional" steel template platforms. Jackets and/or piles for "tower-type" platforms are not included in the scope of the investigation. Appurtenances include grouting systems, boat landings, pre-installed conductor pipes and similar attachments. These jackets and piles are currently classified in the *Tariff Schedules of the United States* under item 652.97.

In accordance with section 733 of the Tariff Act of 1930, as amended (the Act) (19 U.S.C. 1673b), on November 25, 1985, the Department published its preliminary determination that there was reason to believe or suspect that jacket and piles from Japan were being sold at less than fair value (50 FR 48454). On April 7, 1986, the Department published its final determination that these imports were being sold at less than fair value (51 FR 11788).

On May 14, 1986, in accordance with section 735(d) of the Act (19 U.S.C. 1673(d)), the ITC notified the Department that such importations materially injure two United States industries.

Therefore, in accordance with sections 736 and 751 of the Act (19 U.S.C. 1673e and 1675), the Department directs United States Customs officers to assess, upon further advice by the administering authority pursuant to section 736(a)(1) of the Act (19 U.S.C. 1673e(a)(1)), antidumping duties equal to the amount by which the foreign market value of the merchandise subject to the order exceeds the United States price for all entries of such merchandise from Japan. These antidumping duties will be assessed on all unliquidated entries of such merchandise entered, or withdrawn from warehouse, for consumption on or after November 25, 1985, the date on which the Department published its "Preliminary Determination" notice in the **Federal Register.**

On and after the date of publication of this notice, United States Customs officers must require, at the same time as importers would normally deposit estimated duties on this merchandise, a cash deposit equal to the estimated weighted-average antidumping duty margin as noted below;

Manufacturers/producers/exporters	Weighted-average (percent)
Hitachi-Zosen Corporation	8.88
Nippon Steel Corporation	8.84
All others	8.87

The margin of 8.84 for Nippon steel Corporation is a change from the original March 31, 1986, final determination figure of 9.19. This change was made based upon correction of clerical errors discovered in the calculation of the margin for the final determination. Accordingly, the previous "all other" margin of 8.92 is changed to 8.87.

This determination constitutes an antidumpting duty order with respect to jackets and piles from Japan, pursuant to section 736 of the Act (19 U.S.C. 1673e) and section 353.48 of the Commerce Regulations (19 CFR 353.48). We have deleted from the Commerce Regulations, Annex I of 19 CFR Part 353, which listed antidumping findings and orders currently in effect. Instead, interested parties may contact the Office of Information Services, Import Administration, for copies of the updated list of orders currently in effect.

This notice is published in accordance with section 736 of the Act (19 U.S.C. 1673e) and § 353.48 of the Commerce Regulations (19 CFR 353.48).

Gilbert B. Kaplan,

Deputy Assistant Secretary for Import Administration.

May 19, 1986.

[FR Doc. 86–11556 Filed 5–20–86; 8:45 am]

BILLING CODE 3510-DS-M

[A-580-505]

Antidumping Duty Order; Offshore Platform Jackets and Piles From Korea

AGENCY: International Trade Administration, Import Administration, Department of Commerce.

ACTION: Notice.

SUMMARY: In an investigation concerning offshore platform jackets and piles (jackets and piles) from Korea, the United States Department of Commerce (the Department) and the United States International Trade Commission (the ITC) have determined that jackets and piles from Korea are being sold at less than fair value and that sales of jackets and piles from Korea are materially injuring two United States industries. Therefore, based on these findings, all unliquidated entries, or warehouse withdrawals, for consumption of jackets and piles from Korea made on or after November 25, 1985, the date on which the Department published its "Preliminary Determination" notice in the **Federal Register,** will be liable for the possible assessment of antidumping duties. Further, a cash deposit of estimated antidumping duties must be made on all such entries, and withdrawals from warehouse, for consumption made on or after the date of publication of this antidumpting duty order in the **Federal Register.**

EFFECTIVE DATE: May 21, 1986.

FOR FURTHER INFORMATION CONTACT: Frank Crowe or John Brinkmann, Office of Investigations, International Trade Administration, United States Department of Commerce, 14th Street and Constitution Avenue, NW., Washington, DC 20230; telephone: (202) 377–4087 or 377–3965, respectively.

SUPPLEMENTARY INFORMATION: The products covered by this investigation are steel jackets (templates) and/or piles of offshore platform, subassemblies thereof that do not require removal from a transportation vessel and further U.S. onshore assembly, and appurtenances attached to the jackets and piles. These products constitute the supporting structures which permanently affix offshore drilling and/or production platforms to the ocean floor. These products are used for "conventional" steel template platforms. Jackets and/or piles for "tower-type" platforms are not included in the scope of the investigation. Appurtenances include grouting systems, boat landings, pre-installed conductor pipes and similar attachment. These jackets and piles are currently classified in the *Tariff Schedules of the United States* under item 652.97.

In accordance with section 733 of the Tariff Act of 1930, as amended (the Act) (19 U.S.C. 1673b), on November 25, 1985, the Department published its preliminary determination that there was reason to believe or suspect that jacket and piles from Korea were being sold at less than fair value (50 FR 48452). On April 7, 1986, the Department published its final determination that these imports were being sold at less than fair value (51 FR 11788).

On May 14, 1986, in accordance with

section 735(d) of the Act (19 U.S.C. 1673(d)), the ITC notified the Department that such importations materially injure two United States industries.

Therefore, in accordance with sections 736 and 751 of the Act (19 U.S.C. 1673e and 1675), the Department directs United States Customs officers to assess, upon further advice by the administering authority pursuant to section 736(a)(1) of the Act (19 U.S.C. 1673e(a)(1)), antidumping duties equal to the amount by which the foreign market value of the merchandise subject to the order exceeds the United States price for all entries of such merchandise from Korea. These antidumping duties will be assessed on all unliquidated entries of such merchandise entered, or withdrawn from warehouse, for consumption on or after November 25, 1985, the date on which the Department published its "Preliminary Determination" notice in the **Federal Register**.

On and after the date of publication of this Notice, United States Customs officers must require, at the same time as importers would normally deposit estimated duties on this merchandise, a cash deposit equal to the estimated weighed-average antidumping duty margins as noted below:

Manufacturers/producers/exporters	Weighted-average (percent)
Daewoo	17.34
All others	17.34

This determination constitutes an antidumping duty order with respect to jackets and piles from Korea, pursuant to section 736 of the Act (19 U.S.C. 1673e) and section 353.48 of the Commerce Regulations (19 CFR 353.48). We have deleted from the Commerce Regulations, Annex I of 19 CFR Part 353, which listed antidumping findings and orders currently in effect. Instead, interested parties may contact the Office of Information Services, Import Administration, for copies of the updated list of orders currently in effect.

This notice is published in accordance with section 736 of the Act (19 U.S.C. 1673e) and § 353.48 of the Commerce Regulations (19 CFR 353.48).

Gilbert B. Kaplan,

Deputy Assistant Secretary for Import Administration.

May 19, 1986.

[FR Doc. 86-11555 Filed 5-20-86; 8:45 am]

BILLING CODE 3510-DS-M

[C-580-504]

Countervailing Duty Order; Offshore Platform Jackets and Piles From the Republic of Korea

AGENCY: Import Administration, International Trade Administration, Commerce.

ACTION: Notice.

SUMMARY: In an investigation concerning offshore platform jackets and piles (jackets and piles) from Korea, the United States Department of Commerce (the Department) and the United States International Trade Commission (the ITC) have determined that jackets and piles from Korea are receiving benefits which constitute subsidies within the meaning of the countervailing duty law, and that imports of jackets and piles from Korea are materially injuring two United States industries. Therefore, based on these findings, all unliquidated entries of jackets or piles which are entered or withdrawn from warehouse on or after July 19, 1985, the date on which the Department published its "Preliminary Determination" notice in the **Federal Register**, and before November 15, 1985, the date we instructed the United States Customs Service to discontinue the suspension of liquidation, will be liable for the possible assessment of countervailing duties. Further, a cash deposit of estimated countervailing duties must be made on all entries, and withdrawals from warehouse, for consumption made on or after the date of publication of this countervailing duty order in **Federal Register**.

EFFECTIVE DATE: May 21, 1986.

FOR FURTHER INFORMATION CONTACT: Rick Herring or Gary Taverman, Office of Investigations, Import Administration, International Trade Administration, U.S. Department of Commerce, 14th Street and Constitution Avenue, NW., Washington, DC 20230; Telephone: (202) 377-0187 or 377-0161, respectively.

SUPPLEMENTARY INFORMATION: The products covered by this investigation are steel jackets (templates) and/or piles for offshore platforms, subassemblies thereof that do not require removal from a transportation vessel and further U.S. onshore assembly, and appurtenances attached to the jackets and piles. These products constitute the supporting structures which permanently affix offshore drilling and/or production platforms to the ocean floor. These products are used for "conventional" steel template platforms. Jackets and/or piles for "tower-type" platforms are not included in the scope of the investigation. Appurtenances include grouting systems, boat landings, pre-installed conductor pipes and similar attachments. These jackets and piles are currently classified in the *Tariff Schedules of the United States* under item 652.97.

In accordance with section 703 of the Act (19 U.S.C. 1671b), on July 19, 1986, the Department published its preliminary determination that there was reason to believe or suspect that imports of jackets and piles from Korea received benefits which constitute subsidies within the meaning of the countervailing duty law (50 FR 29461). In accordance with section 705 of the Act (19 U.S.C. 1671d), on April 7, 1986, the Department published its final determination that these imports are being subsidized (51 FR 11779).

On May 14, 1986, in accordance with section 705(d) of the Act [19 U.S.C. 1671d(d)], the ITC notified the Department of its determination that imports of jackets and piles from Korea are materially injuring two United States industries.

Therefore, in accordance with section 706 of the Act (19 U.S.C. 1671e), the Department directs United States Customs officers to assess, upon further advice by the administering authority pursuant to section 706(a)(1) and 751 of the Act [19 U.S.C. 1671e(a)(1) and 1675], countervailing duties equal to the amount of the net subsidy of all entries of jackets and piles from Korea. These countervailing duties will be assessed on all unliquidated entries of jackets and piles from Korea entered, or withdrawn from warehouse, for consumption on or after July 19, 1985, the date on which the Department published its notice of "Preliminary Affirmative Countervailing Duty Determination" in the **Federal Register**, and before November 15, 1985, the date we instructed the United States Customs Service to discontinue the suspension of liquidation. We instructed Customs to discontinue the suspension of liquidation on November 15, 1985, because under Article 5, paragraph 3 of the Agreement on Interpretation and Application of Articles VI, XVI and XXIII of the General Agreement of Tariffs and Trade (the Subsidies Code), provisional measures cannot be imposed for more than 120 days. Thus, we could not impose a suspension of liquidation on the subject merchandise for more than 120 days without final determination of subsidization and injury.

On and after the date of publication of this notice, United States Customs officers must require, at the same time

as importers would normally deposit estimated customs duties on this merchandise, a cash deposit equal to 3.22 percent *ad valorem* for Plaform Julius and a cash deposit equal to 4.42 percent *ad valorem* on any other import of jackets and piles.

This determination constitutes a countervailing duty order with respect to jackets and piles from Korea pursuant to section 706 of the Act (19 U.S.C. 1671e) and 355.36 of the Commerce Regulations (19 CFR 355.36).

We have deleted from the Commerce Regulations Annex III to 19 CFR Part 355 which listed countervailing duty orders currently in effect. Instead, interested parties may contact the Office of Information Services, Import Administration for copies of the updated list of orders currently in effect.

Notice of Review

In accordance with section 751(a)(1) of the Act [19 U.S.C. 1675(a)(1)], the Department hereby gives notice that, if requested, it will commence an administrative review of this order. For further information regarding this review, contact Mr. Richard Moreland at (202) 377-2768.

This notice is published in accordance with section 706 of the Act (19 U.S.C. 1671e) and § 355.36 of the Commerce Regulations (19 CFR 355.36).

Gilbert B. Kaplan,

Deputy Assistant Secretary for Import Administration.

May 19, 1986.

[FR Doc. 86-11554 Filed 5-20-86; 8:45 am]

BILLING CODE 3510-DS-M

National Oceanic and Atmospheric Administration

Taking of Marine Mammals Incidental to Commercial Fishing Operations

AGENCY: National Marine Fisheries Service (NMPS), NOAA, Commerce.

ACTION: Notice of Determination.

SUMMARY: The Assistant Administrator for Fisheries, NMFS, in consultation with the Department of State, finds that the Government of Mexico is in substantial conformance with U.S. regulations governing the taking of marine mammals incidental to commercial tuna purse seining operations. Because of this determination, the Assistant Administrator finds that the importation prohibition on yellowfin tuna imposed under the Marine Mammal Protection Act (MMPA) on February 1, 1981, is no longer appropriate and is hereby rescinded. However, as long as Mexican yellowfin tuna remains embargoed under other statutes, the exportation of tuna to the United States cannot commence until other prohibitions are lifted.

EFFECTIVE DATE: May 21, 1986.

FOR FURTHER INFORMATION CONTACT: Kenneth R. Hollingshead, Office of Protected Species and Habitat Conservation, NMFS, Washington, DC 20235 (202/634-7529).

SUPPLEMENTARY INFORMATION:

Background

The NMFS published regulations in the **Federal Register** on December 23, 1977 (42 FR 64548-60) governing the taking of marine mammals incidental to commercial fishing operations. These regulations were repromulgated on October 31, 1980 (45 FR 72178-96). Included in these regulations are provisions concerning the importation of yellowfin tuna and tuna products from nations whose vessels participate in the yellowfin tuna purse seine fishery in the eastern tropical Pacific Ocean (ETP). Effective January 1, 1978, these importation provisions made the importation of yellowfin tuna and tuna products from nations known to be involved in the ETP fishery contingent upon certain findings by the Assistant Administrator for Fisheries, NOAA (Assistant Administrator). The Assistant Administrator must find (a) that the fishing operations of the nation concerned ". . . are conducted in conformance with U.S. regulations and standards . . ." or (b) that . . . "although not in conformance with these regulations, such fishing is accomplished in a manner which does not result in an incidental mortality and serious injury in excess of that which results from U.S. fishing operations under these regulations." To ensure that the conditions under which the original finding was made continue to exist, the Assistant Administrator requires an annual update of the items listed in § 216.24(e)(5)(ii). Failure to supply this information may result in a revocation of a finding.

On October 27, 1977 (42 FR 56617), the Assistant Administrator made a determination that Mexico's tuna purse seine fleet was fishing in conformance with U.S. marine mammal regulations and on May 16, 1980, requested updated information, due September 1, 1980, pertaining to the 1979 fishing year. However, on July 15, 1980, the Department of the Treasury noted in the **Federal Register** (45 FR 47562) that effective July 14, 1980, "the entry for consumption . . . of tuna and tuna products from Mexico is prohibited until the Department of State notifies the Secretary of the Treasury that the reasons for this prohibition no longer prevail." This prohibition is imposed under section 205(a)(4)(C) of the Magnuson Fishery Conservation and Management Act which provides that the Secretary of State shall certify to the Secretary of the Treasury any determination that a fishing vessel of the United States, while fishing in waters beyond any foreign nation's territorial sea, to the extent that such sea is recognized by the United States, has been seized by a foreign nation as a consequence of a claim of jurisdiction not recognized by the United States. The seizure of a U.S. tuna vessel on July 9, 1980, by Mexico resulted in the imposition of this embargo. In consequence thereof, the Government of Mexico did not submit the information requested on May 16, 1980 and on February 1, 1981 (46 FR 10974, February 5, 1981) was also prohibited from exporting yellowfin tuna to the United States under section 101(a)(2) of the MMPA.

Finding of Conformance

On December 23, 1985, the Government of Mexico submitted information under 50 CFR 216.24(e) and requested that Mexican tuna purse seine operations be found in conformance with U.S. law. The NMFS has reviewed this information and has determined that Mexico is fishing in substantial conformance with U.S. regulations regarding the protection of porpoise. Therefore, the yellowfin tuna importation prohibition under the MMPA is no longer appropriate and is hereby rescinded. The information considered in Mexico's finding is summarized below.

(a) *Fleet.*—Mexico reports a purse seine fleet of 90 vessels, 66 of which have a carrying capacity greater than 400 tons. A total 37 vessels are presently inactive.

(b) *Gear and Techniques.*—Since 1977, Mexico has had an administrative measure requiring purse seine vessels to use 1¼ inch "Medina" panel or super protection panel, backdown procedures and other measures to aid in the release of porpoise. In addition, inquiries from captains operating Mexican flag vessels and some Mexican tuna vessels observed in San Diego indicate the presence of porpoise saving gear.

(c) *Porpoise Motality.*—Mexico agreed to participate in a Inter-American Tropical Tuna Commission's (IATTC) observation program in 1985. Under this agreement, the IATTC completed training for 42 Mexican

technicians in November, 1985. Placement of these technicans aboard Mexican tuna vessels began in January, 1986; 20 to 25 trips are expected to be completed during the year. Information collected by the observers will enable the IATTC to estimate, by direct means, the total porpoise mortality for the entire international tuna fleet fishing associated with porpoise in the eastern Pacific Ocean. The addition of the Mexican information is particularly significant since Mexico now has the largest tuna purse seine fleet operating in the eastern Pacific Ocean.

It should be noted that this finding of conformance will be valid only until such time as new regulations regarding purse seine caught yellowfin tuna from the ETP can be promulgated. At that time, all nations purse seine fishing in the ETP will be required to resubmit data in compliance with the 1984 amendment to the Marine Mammal Protection Act (see 49 FR 48921, November 29, 1984). The proposed rulemaking on this action is expected to be released within sixty days.

The information submitted by the Government of Mexico in requesting a finding of conformance by the United States, and further supplementary information used by the NMFS in support of the above finding is available to the public at the information contact address set out above.

Dated: May 15, 1986.

William G. Gordon

Assistant Administrator for Fisheries National Marine Fisheries Service.

[FR Doc. 86-11397 Filed 5-20-86; 8:45 am]

BILLING CODE 3510-22-M

National Technical Information Service

Intent to Grant Exclusive Patent License; Biogen Research Corp.

The National Technical Information Service (NTIS), U.S. Department of Commerce, intends to grant to Biogen Research Corporation, having a place of business at Fourteen Cambridge Center, Cambridge, MA 02142, an exclusive right in the United States to manufacture, use, and sell products embodied in the invention entitled "Purification of Uromodulin," U.S. Patent Application Serial No. 749,442. The patent rights in this invention have been assigned to the United States of America, as represented by the Secretary of Commerce.

The proposed exclusive license will be royalty-bearing and will comply with the terms and conditions of 35 U.S.C. 209 and 37 404.7. The proposed license may be granted unless, within sixty days from the date of this published Notice, NTIS receives written evidence and argument which establishes that the grant of the proposed license would not serve the public interest.

Inquiries, comments and other materials relating to the proposed license must be submitted to Robert P. Auber, Office of Federal Patent Licensing, NTIS, Box 1423, Springfield, VA 22151.

Douglas J. Campion,

Office of Federal Patent Licensing, U.S. Department of Commerce, National Technical Information Service.

[FR Doc. 86-11455 Filed 5-20-86; 8:45 am]

BILLING CODE 3510-04-M

CONSUMER PRODUCT SAFETY COMMISSION

Notification of Request for Approval of Survey of Manufacturers and Importers of Chain Saws and Saw Chains

AGENCY: Consumer Product Safety Commission.

ACTION: Notice.

SUMMARY: In accordance with the Paperwork Reduction Act (44 U.S.C. Chapter 35), the Consumer Product Safety Commission has submitted to the Office of Management and Budget a request for approval of a survey of manufacturers and importers of chain saws and saw chains to determine the extent to which their products conform with the anti-kickback provisions of the voluntary standard designated ANSI B 175.1, "Safety Requirements for Gasoline Powered Chain Saws," published by the American National Standards Institute.

In the **Federal Register** of January 23, 1986 (51 FR 3095), the Commission first announced that it had submitted the request for approval of this survey. Since substantial modifications have been made, the Commission is resubmitting the survey.

Chain saw "kickback" is the sudden upward or backward movement of a chain saw toward the operator which can result from interference with the movement of the chain. Kickback can propel the moving saw chain into contact with the person using the chain saw, with serious injuries often resulting. The Commission estimates that chain saw kickback causes approximately 22,000 injuries a year.

For several years, the Commission has been working to reduce risks of chain saw kickback injuries. In the **Federal Register** of May 5, 1982 (47 FR 19369), the Commission published an advance notice of proposed rulemaking (ANPR) to begin a proceeding for development of a consumer product safety standard to address risks of injury from rotational kickback of chain saws. This proceeding, if followed to completion, could have resulted in the issuance of a consumer product safety standard consisting of mandatory requirements for chain saws and saw chains. However, section 9 of the Consumer Product Safety Act (15 U.S.C. § 2058) provides that when a voluntary standard is in existence and addresses a risk of injury associated with a consumer product, the Commission may not issue a consumer product safety standard to address the same risk or injury unless the Commission concludes either that the voluntary standard is not likely to reduce the risk adequately, or that substantial compliance with the provision of the voluntary standard is not likely to occur.

In 1985, the American National Standards Institute adopted an amendment to its voluntary standard for gasoline-powered chain saws to require additional features intended to reduce injuries associated with chain saw kickback. This amendment was the culmination of several years of work by the chain saw and saw chain industry with assistance from the Commission staff. The Commission believes that the amended ANSI standard, if universally followed by the manufacturers of chain saws and saw chains, will substantially reduce the number of kickback injuries that occur each year. On the basis of currently available information, the Commission expects that a large portion of the chain saw industry will conform to the provisions of the amended voluntary standard. For these reasons the Commission published a notice in the **Federal Register** of August 30, 1985 (50 FR 35241) terminating the proceeding for development of a consumer product safety standard for chain saws.

The Commission will use the results from the proposed survey to determine the extent to which chain saws and saw chains produced and distributed for sale to or use by consumers conform to the requirements of the amended ANSI standard for gasoline powered chain saws. The Commission will consider this information to determine whether it should take further action to address risks of injury associated with rotational kickback of chain saws.

Additional Details About the Requested Approval for Collection of Information

Agency address: Consumer Product Safety Commission, 1111 18th Street, N.W., Washington, D.C. 20207.

Title of information collection: Kickback Amendment to the American National Standard—Safety Requirements for Gasoline Powered Chain Saws (ANSI B 175.1).

Type of request: Approval of new plan.

Frequency of collection: One time.

General description of respondents: Manufacturers and importers of chain saws and saw chains; laboratories which perform third party certification of compliance with amendment ANSI standard.

Estimated number of respondents: 26.

Estimated number of hours for all respondents: 117.

Comments: Comments on this request for approval of a collection of information should be addressed to Andy Velez-Rivera, Desk Officer, Office of Information and Regulatory Affairs, Office of Management and Budget, Washington, D.C. 20503; telephone (202) 395-7340. Copies of the request for approval of a collection of information are available from Francine Shacter, Office of Budget, Program Planning, and Evaluation, Consumer Product Safety Commission, Washington, D.C. 20207; telephone (301) 492-6529.

This is not a proposal to which 44 U.S.C. 3504(h) is applicable.

Dated: May 2, 1986.

Sayde E. Dunn,

Secretary, Consumer Product Safety Commission.

[FR Doc. 86-11389 Filed 5-20-86; 8:45 am]

BILLING CODE 6355-1-M

COPYRIGHT ROYALTY TRIBUNAL

[Docket No. 85-4-84CD]

1984 Cable Royalty Distribution; Solicitation of Comments

AGENCY: Copyright Royalty Tribunal.

ACTION: Notice.

FOR FURTHER INFORMATION CONTACT: Edward W. Ray, Chairman, Copyright Royalty Tribunal, 1111 20th Street NW., Suite 450, Washington, DC. 20036, (202) 653-5175.

SUMMARY: The Tribunal solicits comments concerning whether a controversy exists with regard to the distribution of the 1984 cable copyright royalty fees.

DATE: All comments are due June 2, 1986.

SUPPLEMENARY INFORMATION: On January 30, 1986, the Copyright Royalty Tribunal solicited comments from the claimants to the 1984 cable copyright fund as to whether a controversy exists with regard to the distribution of the 1984 cable copyright fees. The comments which the Tribunal received tended to indicate a desire on the part of many claimants to wait for publication by the Tribunal of its determination of the 1983 cable distribution controversy, after which efforts at settlement could be made. The Tribunal is aware the publication of the 1983 cable distribution determination on April 15, 1986, the claimants have been meeting to ascertain the extent of the controversy for 1984. By this Notice, the Tribunal once again solicits comments from the claimants whether a controversy exists with regard to the distribution of the 1984 cable copyright royalty fees. All comments are due June 2, 1986.

Dated: May 16, 1986.

Edward W. Ray,

Chairman.

[FR Doc. 86-11376 Filed 5-20-86; 8:45 am]

BILLING CODE 1410-01-M

DEPARTMENT OF DEFENSE

Office of the Secretary

Strategic Defense Initiative Organization; Intent to Establish Federally Funded R&D Center

ACTION: Notice of DOD intent to establish a federally funded research and development center (FFRDC).

SUMMARY: The Department of Defense announces its intention to establish a Federal Funded Research and Development Center (FFRDC) to support the Strategic Defense Initiative Organization (SDIO) and to designate the FFRDC as the Strategic Defense Initiative Institute (SDII). The purpose of this action is to make continuously available to the Strategic Defense Initiative Organization (SDIO) a relatively small but dedicated technical support unit that can facilitate the utilization, in a manner that is more timely, cost effective, and productive than currently possible, of the large national capability that must be applied to the Strategic Defense Initiative Program (SDIP). To accomplish this goal, the support unit personnel must have the across-the-board SDI-related technical skills and functional capabilities to perform a technology evaluation and integration role in support of the SDIO.

The SDII will seek flexible and innovative approaches to solving complex and multidimensional problems for the SDIP. In accomplishing this task, it will tap the broad base of talent, relevant experience, and perspectives available from addressing prior programmatic challenges. This will require contributions from a wide range of agencies and existing organizations, each of which already has some of the resources and skills in the needed areas, but no one of which can address SDIP technical support needs as a unified, coordinated whole.

The SDII must be free from actual, potential, or apparent individual or organizational conflicts of interest. It must gain no competitive advantage from its position over those whose efforts it is helping the SDIO oversee; nor lack objectivity as a result of having profit-seeking, manufacturing, or other conflicting organizational goals, such as a desire to serve other clients.

It has been decided, based on a careful comparative evaluation by the SDIO of all feasible institutional alternatives, that only a carefully designated, new Federally Funded Research and Development Center (FFRDC) within ready physical access of the SDIO can effectively satisfy the above purposes for the SDII. Accordingly, this announcement is being issued in compliance with the procedures of OFPP Policy Letter 84-1 of April 4, 1984, "Federally Funded Research and Development Centers."

The Mission Statement for the SDII is as follows:

Mission Statement

The specific mission of the SDII will be to perform, in a highly flexible manner, research, studies, and analyses of emerging technologies and system concepts relative to the Strategic Defense Initiative Program (SDIP); and to provide technical evaluation of basic and applied research efforts and program developments by other contractors. In particular, the scope and nature of the effort to be performed by the SDII in support of the SDIO will include, but not be limited to: (1) Identifying and evaluating existing and potential technical advances, technologies, and system concepts from all available sources; (2) Reducing the costs and increasing the effectiveness of basic and applied SDIP research; (3) Providing advice on the relative utility and integration implications of each of the complex technical aspects of the SDIP; (4) Assessing and helping to develop evolving technical requirements, architectures, and their related testbed needs; (5) Performing test and evaluation planning; (6) Integrating Offense/Defense scenarios and analyses into useful conclusions and framing of issues for decision by the SDIO; (7) Developing and maintaining a data base on active SDIP projects and capabilities, and continually analyzing

same for overlap, duplication, and opportunities for coodination; (8) Conducting SDIP-related studies and analyses; and (9) Coordinating and performinmg other technical and liaison tasks, including interface with the pertinent acquisition activities of the military services, related to performance of SDIP-related technical activities in industry, universities, government laboratories, and elsewhere.

This announcement is not a synoposis in accordance with Section 18 of the Office of Federal Procurement Policy Act, or otherwise a synopsis of sources sought in connection with a procurement. It is being published in response to Paragraph 6b(2) of the Office of Federal Procurement Policy policy letter on FFRDC's which provides for at least three notices over a 90-day period in the *Commerce Business Daily* and the **Federal Register** indicating an agency's intentions to sponsor an FFRDC and the scope and nature of the effort to be performed by the FFRDC.

FOR FURTHER INFORMATION CONTACT: Mr. Richard Sybert, Special Assistant to the Secretary, Executive Secretariat/OSD, Pentagon 3E880, Washington, DC 20301-1000, telephone (202) 697-8388.

Patricia H. Means,

OSD Federal Register Liaison Officer Department of Defense.

[FR Doc. 86-11392 Filed 5-20-86; 8:45 am]

BILLING CODE 3810-01-M

Defense Intelligence Agency Scientific Advisory Committee, DOD

ACTION: Notice of closed meeting.

SUMMARY: Pursuant to the provisions of subsection (d) of section 10 of P.L. 92-463, as amended by section 5 of Pub. L. 94-409, notice is hereby given that a closed meeting of a panel of the DIA Scientific Advisory Committee has been scheduled as follows:

DATE: 18 June 1986, 9:00 a.m. to 5:00 p.m..

ADDRESS: The DIAC, Bolling AFB, Washington, DC.

FOR FURTHER INFORMATION CONTACT: Lieutenant Colonel Harold E. Linton, USAF, Executive Secretary, DIA Scientific Advisory Committee, Washington, DC 20301 (202/373-4930).

SUPPLEMENTARY INFORMATION: The entire meeting is devoted to the discussion of classified information as defined in section 552b(c)(1), Title 5 of the U.S. Code and therefore will be closed to the public. Subject matter will be used in a special study on U.S. Strategic Defense Initiative.

Patricia H. Means,

OSD Federal Register Liaison Officer, Department of Defense.

May 15, 1986.

[FR Doc. 86-11382 Filed 5-20-86; 8:45 am]

BILLING CODE 3810-01-M

Graduate Medical Education Advisory Committee; Meeting

AGENCY: Department of Defense.

ACTION: Notice of Open and Closed Meeting.

SUMMARY: Pursuant to the provisions of Pub. L. 92-463, notice is hereby given that an open and closed meeting of the Department of Defense Graduate Medical Education Advisory Committee has been scheduled as follows:

DATE: June 6, 1986, 10:00 a.m. to 5:00 p.m.

ADDRESS: Crystal City Marriott, 1999 Jefferson Davis Highway, Arlington, Virginia.

Notice of Closed Meeting

The Committee will meet in closed session from 8:00 a.m. to 9:30 a.m. on June 6, 1986, in room 3E267, the Pentagon, Washington, DC, to receive a classified briefing on issues affecting the sizing of the Services Graduate Medical Education programs in accordance with section 10(d) of 5 U.S.C. Appendix I.

FOR FURTHER INFORMATION CONTACT: Lieutenant Colonel Michael Herndon, Executive Secretary, DoD Graduate Medical Education Advisory Committee, Office of the Assistant Secretary of Defense (Health Affairs), Room 1B657, the Pentagon, Washington, DC 20301 [(202) 694-0748].

SUPPLEMENTARY INFORMATION: The open meeting will consist of briefing by the Services and DoD on the respective Graduate Medical Education program. Briefings on medical readiness issues and the proceedings of the Blue Ribbon Panel will likewise be presented.

Patricia H. Means,

OSD Federal Register Liaison Officer Department of Defense.

May 15, 1986.

[FR Doc. 86-11391 Filed 5-20-86; 8:45 am]

BILLING CODE 3810-01-M

DEPARTMENT OF DEFENSE POSTAL SERVICE

Handicapped Persons; Uniform Federal Accessibility Standards

AGENCY: Postal Service, Department of Defense.

ACTION: Uniform Federal Accessibility Standards Document; Correction.

SUMMARY: This document corrects a previously published document that appeared in the **Federal Register** on Tuesday, August 7, 1984 (49 FR 31528), which presented uniform standards for the design, construction, and alteration of buildings so that physically handicapped persons will have ready access to and use of them in accordance with the Architectural Barriers Act, 42 U.S.C. 4151-4157. This action is necessary to correct inadvertent errors in the document, the Uniform Federal Accessibility Standards (UFAS), which was subsequently adopted by the U.S. Postal Service (USPS) in Handbook RE-4, "Standards for Facility Accessibility by the Physically Handicapped," effective November 15, 1985, and by the Department of Defense (DOD) by revising Chapter 18 of DOD 4270.1-M, "Construction Criteria," by memorandum dated May 8, 1985. These errors include omission of words, typographical errors, and an incorrect term of measurement of door opening forces.

FOR FURTHER INFORMATION CONTACT: Judith Gilliom, Department of Defense, Office of the Deputy Assistant Secretary of Defense (Civilian Personnel Policy), Room 3D264, The Pentagon, Washington, DC 20301-4000, (202) 697-8661; or Melinda Hulsey, Real Estate and Buildings Department, U.S. Postal Service, 475 L'Enfant Plaza West SW., Washington, DC 20260-6424, (202) 268-3139. For TDD communications, call Ms. Gilliom. Please note that these are not toll-free numbers.

SUPPLEMENTARY INFORMATION: This document corrects several sections of the Uniform Federal Accessibility Standards (UFAS) published at pages 31528-31617 of the **Federal Register** on August 7, 1984. Identical corrections have been published in the **Federal Register** by the Department of Housing and Urban Development (HUD) and the General Services Administration (GSA), which are the other two agencies that developed and published the UFAS jointly with the USPS and DOD.

These corrections include removal of certain words inadvertently contained in the document (for example, where the Table of Contents section heading differed from the actual heading in the text); addition of words that were unintentionally omitted; correction of typrographical and numbering errors; and addition of asterisks where needed to correct references to the UFAS Appendix. It also substitutes Newtons for kilograms and foot pounds (1bf) for

pounds (lb) as the measure of door opening force. These are the appropriate measures for a dynamic force and are consistent with the American National Standards Institute ANSI A117.1 specification on which the UFAS is based.

In addition, corrections are made to certain illustrations to clarify or otherwise improve the drawings or their captions. Figure 34(a) is revised by extending to the wall the dimension line showing the maximum distance between the end of a grab bar and the wall at the head of the bathtub. As originally published, the line was incomplete and did not touch the wall. Figure 35(b) is revised by removing the dimension 15/380 from the drawing. This dimension was incorrectly included on the original drawing and has no application in this situation.

Other changes to illustrations include a revision to Figure 48(b) to remove the cross-hatching denoting a requirement for reinforcement for grab bars shown on the drawing of the wall at the head of the tub. Grab bars are not required in this situation, as indicated by the similar drawing at Figure 34(b). This change makes both figures consistent. A similar change is made to Figure 49(a), where cross-hatching incorrectly required reinforcement where none is needed (see the comparable drawing at Figure 37(a)). Revisions also are made to Figure 49(b), where the controls shown o the drawing of the back wall of the shower stall are removed, as well as the dimensions applicable to the placement of controls, and are shown instead on the side wall drawing. This makes Figure 49(b) consistent with the comparable drawing at Figure 37(b). In the UFAS Appendix, a figure number is added to the untitled drawings shown on page 31608 of the **Federal Register.**

Accordingly, the USPS and DOD are correcting the Uniform Federal Accessibility Standards document published in the **Federal Register** on August 7, 1984, at 49 FR 31528, as follows:

Uniform Federal Accessibility Standards

1. In the Table of Contents, the heading for Section 2.2 is corrected to read:

2.2 Provisions for Adults

2. The following corrections are made to 4.1.4. Occupancy Classifications: The introductory paragraph of paragraph (9) is amended by revising the phrase "in which people having physical or medical treatment or care" to read "in which people have physical or medical treatment or care"; paragraph (9)(b) is amended by revising "toilet" to read "toilets" each of the four times the word appears; and paragraph (12) is amended by removing the abbreviation "noncom" the two times it appears and adding in its place "noncombustible."

3. In 4.1.5 Accessible Buildings: Additions, the reference to "4.1.6" in paragraph (4) is revised to read "4.1.5."

4. In 4.1.6 Accessible Buildings: Alterations, paragraph (4)(d)(i) is amended by revising the phrase "of the latch side door stop" to read "for the latch side door stop".

5. In 4.5.3 Carpet: The phrase "*(see Fig. 8(f))*" is removed from where it appears, and is added at the end of the paragraph, before the period to the sentence.

6. Asterisks are added at paragraph designations 4.11*, 4.16.5* and 4.31.3.*

7. In 4.13.6 Maneuvering Clearances at Doors: The phrase "for doors" is removed and the phrase "at doors" is added in its place.

8. In 4.13.11* Door Opening Force: In paragraphs (2)(b) and (2)(c) the references to "lb" are revised to read "lbf" and the references to "2.3kg" are amended to read "22.2N".

9. In 4.13.12* Automatic Doors and Power-Assisted Doors: The reference to "(6.8K)" is revised to read "(66.6N)".

10. In 4.34.4 Consumer Information: The first paragraph (5) is amended by revising "Standard" to read "Standards".

11. In 4.34.5.3 Lavatory, Mirrors, and Medicine Cabinets: Paragraphs (1) and (2) are amended by revising the references to "4.22.7" to read "4.22.6."

12. In 8.4 Card Catalogs: The phrase "with a maximum height of 54 in (1370 mm) preferred" is revised to read "with a height of 48 in (1220 mm) preferred."

13. In 9.3 Self-Service Postal Centers: The word "user" is added following the term "wheelchair" in the second sentence.

14. In the Appendix to the UFAS, A4.5.1 is amended by revising "cobblestone" to read "cobblestones" in the first paragraph, and by revising "general" to read "generally" in the second paragraph.

15. In the Appendix to the UFAS, A4.6 is amended by adding the following new paragraph inadvertently omitted from the published text:

A4.6.4 SIGNAGE. Signs designating parking places for disabled people can be seen from a driver's seat if the signs are mounted high enough above the ground and located at the front of a parking space.

16. In the Appendix to the UFAS, A4.28 is amended by revising the title and numerical designation of paragraph "A4.28.3 VISUAL ALARMS" to "A4.28.4 AUXILARY ALARMS" and by removing "should" where it appears in the last sentence and adding "should be" between "also" and "equipped"; and by adding the following new paragraph A4.28.3 inadvertently omitted from the published text:

A4.28.3 VISUAL ALARMS. The specifications in this section do not preclude the use of zoned or coded alarm systems. In zoned systems, the emergency exit lights in an area will flash whenever an audible signal rings in the area.

17. In the Appendix to the UFAS, A4.33.2 is amended by adding "area" between "seating" and "are provided."

18. In the Appendix to the UFAS, A4.33.7 is amended by revising "move" to read "moved."

19. In the Appendix to the UFAS, A4.34.5 and A4.34.6 are amended by removing "adaptable" from the titles of both paragraphs.

20. In the Appendix to the UFAS, A4.34.6.1 is amended by revising "moved" to read "removed."

21. In the Appendix to the UFAS, A9 is amended by revising the title of "A9.2 General" to read "A9.2 Post Office Lobbies."

22. The following note is added to Fig. 19:

X is the 12 in minimum handrail extension required at each top riser.

Y is the minimum handrail extension of 12 in plus the width of one tread that is required at each bottom riser.

23. Fig. 34(a) is revised as shown below:

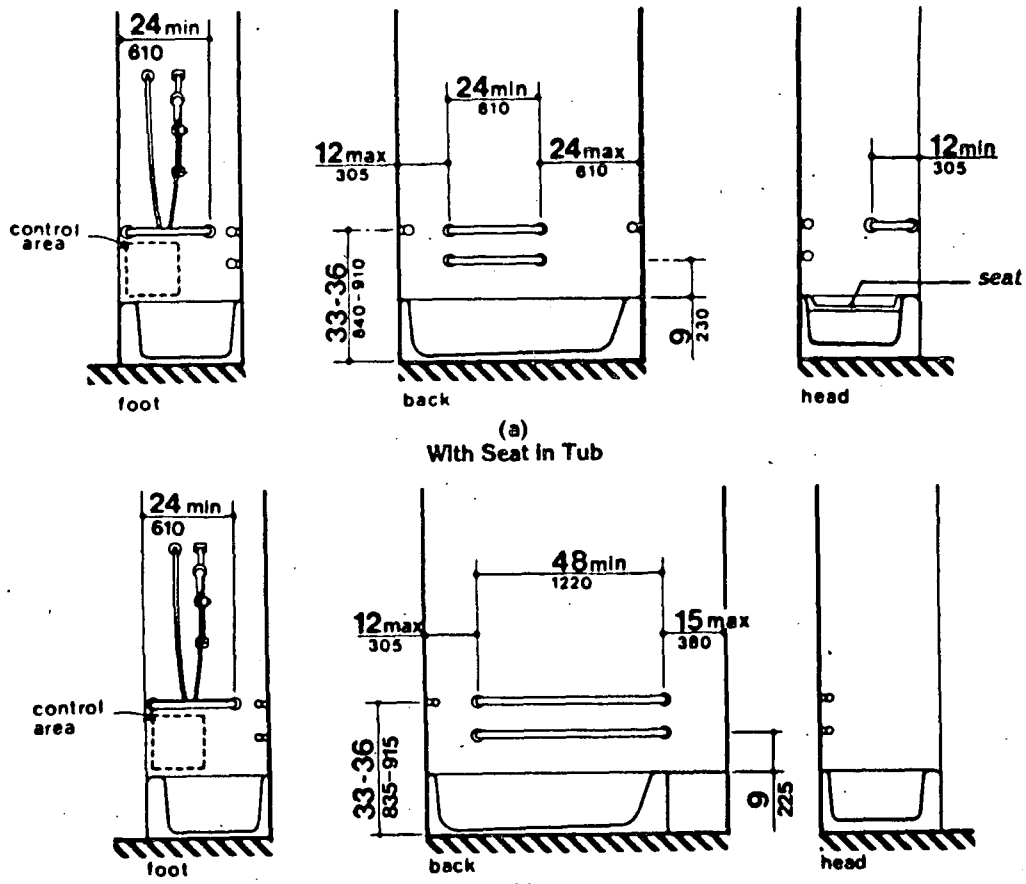

Fig. 34
Grab Bars at Bathtubs

24. Fig. 35(b) is amended by removing the dimensions "15" and "380".

25. Fig. 48(b) and revised as shown below:

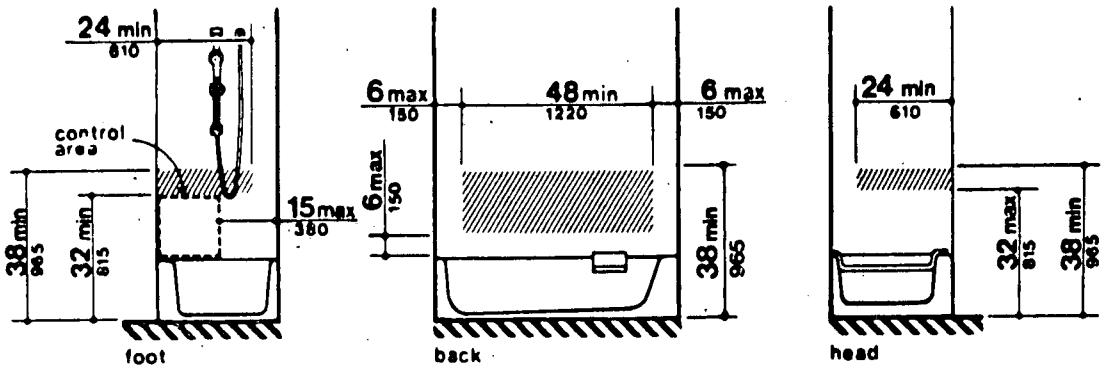

(a)
With Seat in Tub

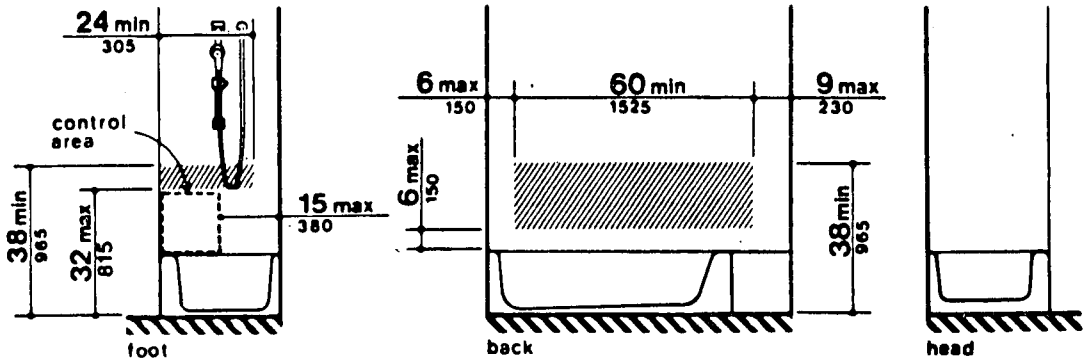

(b)
With Seat at Head of Tub

NOTE: The hatched areas are reinforced to receive grab bars.

Fig. 48
Location of Grab Bars and Controls of Adaptable Bathtubs

26. Fig. 49 (a) and (b) are revised as shown below:

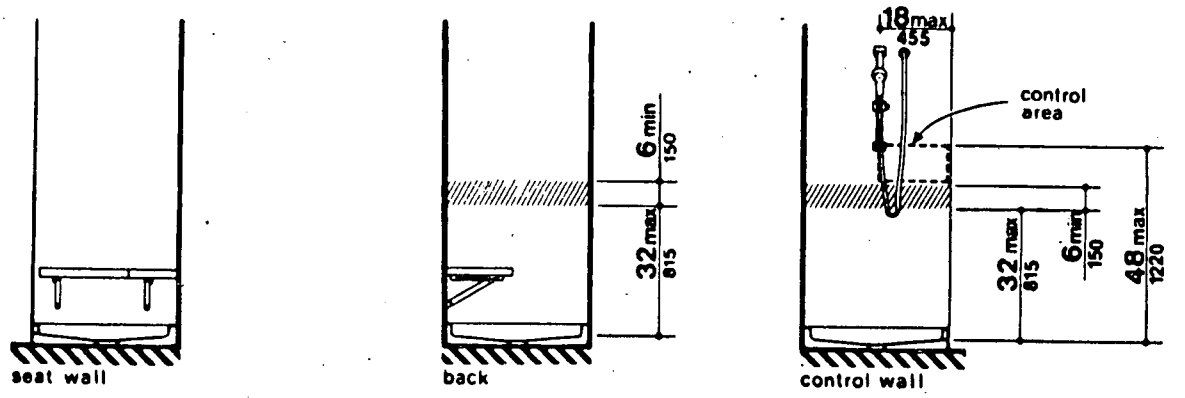

(a)
36-in by 36-in (915-mm by 915-mm) Stall

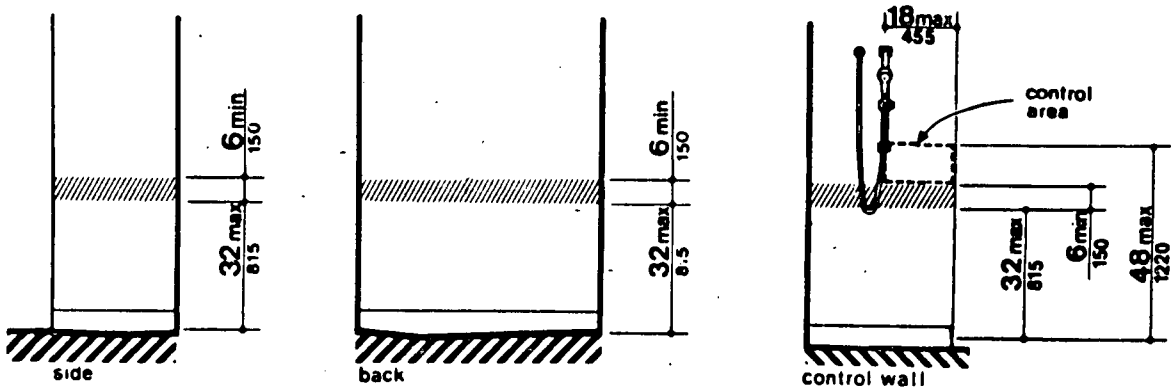

(b)
30-in by 60-in (750-mm by 1525-mm) Stall

NOTE: The hatched areas are reinforced to receive grab bars.

Fig. 49
Location of Grab Bars and Controls of Adaptable Showers

27. In the Appendix to the UFAS, unlabeled figure following and referenced in A4.2.5 and A4.2.6 is amended by adding the designation "Fig. A3(a)."

Dated: April 28, 1986.

Chapman B. Cox,

Assistant Secretary of Defense, (Force Management and Personnel).

Fred Eggleston,

Assistant General Counsel, Legislative Division, U.S. Postal Service.

[FR Doc. 86-11383 Filed 5-20-86; 8:45 a.m.]

BILLING CODE 7710-12-M

DEPARTMENT OF EDUCATION

Office of Special Education and Rehabilitative Services

Experimental and Innovative Training program; Availability of Grants

AGENCY: Department of Education.

ACTION: Notice of proposed funding priority for fiscal year 1986.

SUMMARY: The Secretary proposes an annual funding priority for training grants under the Experimental and Innovative Training Program in order to ensure effective use of program funds and to direct funds to an area of identified personnel need during fiscal year 1986. The Secretary will give an absolute preference to applications that need the terms of the proposed priority.

DATE: Comments must be received on or before June 20, 1986.

ADDRESS: All written comments and suggestions should be sent to Delores L. Watkins, Office of Developmental Programs, Rehabilitation Services Administration, Department of Education, 400 Maryland Avenue, SW., (Switzer Building, Room 3324-M/S 2312), Washington, DC 20202.

FOR FURTHER INFORMATION CONTACT: Delores L. Watkins, Office of Developmental Programs, Rehabilitation Services Administration. Telephone: (202) 732-1332.

SUPPLEMENTARY INFORMATION: Grants for the experimental and Innovative Training Program are authorized by Title III, Section 304 of the Rehabilitation Act of 1973, as amended. Program regulations for the Experimental and Innovative Training Program are established at 34 CFR Part 387. The purpose of the Experimental and Innovative Training Program is to support projects designed to develop new types of rehabilitation personnel and to demonstrate the effectiveness of these new types of personnel in providing rehabilitation services to severely handicapped persons and to

develop new and improved methods of training rehabilitation personnel to achieve more effective delivery of rehabilitation services by State and other rehabilitation agencies.

Proposed Priority

In accordance with the Education Department General Administrative Regulations (EDGAR) at 34 CFR 75.105(c)(3), the Secretary proposes to give an absolute preference to applications submitted under the Experimental and Innovative Training Program in fiscal year 1986 that respond to the priority described below. An absolute preference is one which permits the Secretary to select only those applications that meet the described priority.

All applications submitted under the Experimental and Innovative Training Program must address the training of rehabilitation counselors employed by State vocational rehabilitation agencies. State vocational rehabilitation agencies have only recently begun to serve learning disabled adults. It is essential, therefore, that rehabilitation counselors develop and maintain skills that will enable them to identify adults who are learning disabled, determine the eligibility of those individuals to receive rehabilitation services, and plan rehabilitation programs for and deliver services to learning disabled individuals. The training must also emphasize improved coordination of services between special education and vocational rehabilitation service providers and the effective use of resources in the community to facilitate the transition of learning disabled individuals from school to employment.

Invitation to Comment

Interested persons are invited to submit comments and recommendations regarding the proposed priority. Written comments and recommendations may be sent to the address given at the beginning of this document. All comments received on or before the 30th day after publication of this document will be considered before the Secretary issues the final notice of priority. All comments submitted in response to this proposed priority will be available for public inspection, during and after the comment period, in Room 3324, Mary E. Switzer Building, 330 C Street, S.W. Washington, D.C. between the hours of 8:30 a.m. and 4:00 p.m. (local time), Monday through Friday of each week, except Federal holidays.

(29 U.S.C. 774)

Dated: May 16, 1986.

(Catalog of Federal Domestic Assistance No. 84.129, Rehabilitation Training Program)

William J. Bennett,

Secretary of Education.

[FR Doc. 86-11458 filed 5-20-86; 8:45 am]

BILLING CODE 4000-01-M

Application Notice for New Awards Under the Independent Living Services for Older Blind Individuals Program for Fiscal Year 1986

AGENCY: Department of Education.

ACTION: Application Notice for New Awards Under the Independent Living Services for Older Blind Individuals Program for Fiscal Year 1986.

Programmatic and Fiscal Information

The purpose of this application notice is to inform potential applicants of fiscal and programmatic information and the closing date for transmittal of new applications for Independent Living Services for Older Blind Individuals projects administered by the Department of Education under the Office of Special Education and Rehabilitative Services. Awards are made under this program to provide independent living services for older blind individuals to help them adjust to blindness and live more independently in the home and community. Eligible applicants for these new awards are State vocational rehabilitation agencies. Authority for these awards is section 721 of the Rehabilitation Act of 1973, as amended.

Section 721(b) of the Act specifies that no application under this program can be approved for funding unless it contains assurances that any new service methods and approaches developed by an approved project will be incorporated into the applicant's State plan under section 705 of the Rehabilitation Act.

The amount of funds available under this grant program in Fiscal Year 1986 is $4,785,000. It is expected that about 24 new projects will be approved for funding and that the average grant award will be approximately $200,000. All project periods will be for 12 months.

These estimates does not bind the U.S. Department of Education to a specific number of grants or to the amount of any grant, unless that amount is otherwise specified by statute or regulations.

Closing Date for Transmittal of Applications

Applications for new grant awards must be mailed or hand-delivered on or before July 8, 1986.

Applications sent by mail must be addressed to the U.S. Department of Education, Application Control Center, Attention: (CFDA No. 84.177), 400 Maryland Avenue, SW., Washington, DC 20202.

Each late applicant will be notified that its application will not be considered.

Applications that are hand-delivered must be taken to the U.S. Department of Education, Application Control Center, Room 3633, Regional Office Building #3, 7th and D Streets, SW., Washington, DC.

The Application Control Center will accept hand-delivered applications between 8:00 a.m. and 4:30 p.m. (Washington, DC, time) daily, except Saturdays, Sundays, and Federal holidays.

Applicable Regulations

Program regulations for this program have not as yet been promulgated. However, as authorized in Department of Education regulations, 34 CFR 75.1(b), this program initially will be implemented under the authorizing statute 29 U.S.C. 796f, and the Education Department General Administrative Regulations (EDGAR) in 34 CFR Parts 74, 75, 77, 78 and 79.

Intergovernmental Review

This program is subject to the requirements of Executive Order 12372 and the regulations in 34 CFR Part 79. The objective of Executive Order 12372 is to foster an intergovernmental partnership and a strengthened federalism by relying on processes developed by State and local governments for coordination and review of proposed Federal financial assistance.

Immediately upon receipt of this notice, applicants that are governmental entities, including local educational agencies, must contact the appropriate State single point of contact to find out about, and to comply with, the State's process under the Executive Order. Applicants proposing to perform activities in more than one State should contact, immediately upon receipt of this notice, the single point of contact for each State and follow the procedures established in those States under the Executive Order. A list containing the single point of contact for each State is included in the application package for this program.

In States that have not established a process or chosen this program for review, State, areawide, regional, and local entities may submit comments directly to the Department.

All comments from State single points of contact and all comments from State, areawide, regional, and local entities must be mailed or hand delivered by September 8, 1986 to the following address:

The Secretary, U.S. Department of Education, Room 4181, (CFDA No. 84.177), 400 Maryland Avenue, SW., Washington, DC 20202.

PLEASE NOTE THAT THE ABOVE ADDRESS IS NOT THE SAME ADDRESS AS THE ONE TO WHICH THE APPLICANT SUBMITS ITS COMPLETED APPLICATION. *DO NOT SEND APPLICATIONS TO THE ABOVE ADDRESS.*

Application Forms

Application forms and program information packages are expected to be available by May 23, 1986. These may be obtained by writing the Office of Developmental Programs, Rehabilitation Services Administration, U.S. Department of Education, 400 Maryland Avenue, SW., Room 3332, Mary E. Switzer Building, Washington, DC 20202, Telephone: (202) 732-1343.

Further Information

For further information contact Robert E. Jones, Office of Developmental Programs, Rehabilitation Services Administration, U.S. Department of Education, 400 Maryland Avenue, SW., Room 3324, Mary E. Switzer Building, Washington, DC 20202, Telephone: (202) 732-1345.

Program Authority: 29 U.S.C. 796f.

(Catalog of Federal Domestic Assistance Number 84.177 Independent Living Services for Older Blind Individuals Program)

Dated: May 16, 1986.

Madeleine Will,

Assistant Secretary for Special Education and Rehabilitative Services.

[FR Doc. 86-11456 Filed 5-20-86; 8:45 am]

BILLING CODE 4000-01-M

DEPARTMENT OF ENERGY

Federal Energy Regulatory Commission

[Docket No. RM85-1-000; (Parts A-D)]

Regulation of Natural Gas Pipelines After Partial Wellhead Decontrol Archer-Daniels-Midland Co.; Order Denying Requests for Waiver

Issued May 15, 1986.

Before Commissioners: Anthony G. Sousa, Acting Chairman; Charles G. Stalon, Charles A. Trabandt and C. M. Naeve.

On April 8, 1986 and April 14, 1986, Archer-Daniels-Midland Company (ADM) filed petitions for clarification and/or waiver of § 284.223(g)(1) of the regulations adopted in Order No. 436.[1] ADM's two petitions request a waiver of the transitional provisions of Order No. 436 to permit the transportation of gas by Panhandle Eastern Pipe Line Company (Panhandle) to ADM's processing facilities in Peoria, Illinois and Mexico, Missouri pursuant to oral agreements with Panhandle to extend existing transportation agreements. We will deny ADM's two requests. ADM outlined the following facts and circumstances in its petitions.

April 8, 1986 Petition

On September 15, 1984, ADM, Panhandle, and Central Illinois Light Company entered into a transportation agreement providing for the transportation of natural gas to ADM's processing facility located in Peoria, Illinos for high-priority end use under § 157.209(a)(1)(A). Service under the agreement commenced during September, 1984, and the termination date is March 15, 1986.

On September 16, 1985, Panhandle forwarded a letter to ADM offering to extend the term of the transportation arrangement through December 31, 1986. Panhandle further stated that it could not obligate itself to continue transporting gas over the long term without first evaluating the final version of the final rule in Docket No. RM85-1-000.

On October 22, 1985, Panhandle and ADM executed a written letter agreement extending the term of the transportation agreement to five years. The letter agreement referred to the final rule in Docket No. RM85-1-000. No reference was made to a verbal agreement entered into prior to October 9, 1985.

ADM states that prior to October 9, 1985, it expended approximately $2.725,000 on its Peoria facility in reliance upon the continuance of transportation service under this agreement with Panhandle. ADM further states that absent a waiver of the transitional provisions of Order No. 436, it will be forced to purchase gas at prices so high as to prohibit its production of a competitively priced product, which may result in the shutting down of its facility and the laying-off of all 119 employees.

ADM requests a wavier or clarification to permit the transportation of gas by Panhandle to continue for the full five-year term pursuant to the October 22, 1985 agreement, or, alternatively, through December 31, 1986, pursuant to the September 16, 1985 letter.

April 14, 1986 Petition

On March 18, 1985, ADM, Panhandle, and Union Electric Company entered into a transportation agreement providing for the transportation of natural gas to ADM's soybean processing facility located in Mexico, Missouri for high-priority end use under § 157.209(a)(1)(A). Service under the agreement commenced on March 20, 1985 and the termination date under the agreement is March 15, 1986.

On April 4, 1985, Panhandle filed an initial report with the Commission pursuant to former § 157.209(g) of the Commission's regulations concerning the tranportation agreement with ADM. In the initial report, Panhandle stated that the agreement was for an eighteen-month term ending in September, 1986, instead of a twelve-month term ending in March, 1986, as specified in the transportation agreement. The transportation agreement was not amended to reflect this change.

On September 16, 1985, Panhandle forwarded a letter to ADM offering to extend the term of the transportation arrangement through December 31, 1986. Panhandle further stated that it could not obligate itself to continue transporting gas over the long term without first evaluating the final version of the final rule in Docket No. RM85-1-000.

On October 22, 1985, Panhandle and ADM executed a written letter agreement extending the term of the transportation agreement to five years. The letter agreement referred to the final rule in Docket No. RM85-1-000. No reference was made to a verbal agreement entered into prior to October 9, 1985.

ADM states that on September 25, 1985, it expended approximately $72,750 on a boiler stack heat exchanger for its processing facility in Mexico, Missouri, in reliance on the continuance of transportation service under the agreement with Panhandle. ADM further states that absent a waiver of the transitional provisions of Order No. 436, it will be forced to purchase gas at prices so high as to prohibit its production of a competitively priced product, which may result in the

[1] 33 FERC ¶ 61,007 (1985), 50 FR 42408 (October 18, 1985), Technical Corrections, FERC Statutes and Regulations ¶ 30,669, 50 FR 45907 (November 5, 1985).

shutting down of its facility and the laying-off of all 50 employees.

ADM requests a waiver or clarification to permit the transportation of gas by Panhandle to continue for the full five-year term pursuant to the October 22, 1985 agreement, or alternatively, through December 31, 1986, pursuant to the September 16, 1985 letter, or, alternatively, through September 15, 1986, pursuant to the initial report filed by Panhandle.

Discussion

As we stated in Order No. 436, § 284.223(g)(1) is a transitional rule for transportation arrangements that pre-dated Order No. 436. Section 284.223(g)(1) specifically provides that a transportation arrangement authorized under § 157.209(a)(1) which commenced on or before October 9, 1985, may continue.

ADM's two transportation agreements with Panhandle were scheduled to terminate on March 15, 1986. ADM relies on September 16, 1985 letters from Panhandle, concerning the respective contracts, as evidence of the intent of the parties, prior to October 9, 1985, to continue the transportation services beyond the original expiration dates. To the contrary, however, the letters do not profess to be agreements to extend the contracts, nor do they acknowledge any verbal agreements between the parties to continue transportation. On their face, the letters are merely *offers* to extend transportation until December 31, 1986. The letters further state Panhandle's unwillingness to obligate itself to continue transporting gas over the long term [i.e. five years] without first evaluating the final rule issued in Docket No. RM85-1-000. Because the transitional rule applies only to agreements, and not offers, the September 16 letters would not operate to effectively extend the period for transitional treatment beyond the March 15, 1986 contract expiration dates.

In that the two transportation agreements between ADM and Panhandle dated October 22, 1985 indicate, on their face, that the agreements were entered into only after Panhandle had sufficient time to evaluate Order No. 436, we conclude that they were not the manifestation of agreements reached prior to October 9, 1985. Accordingly, they would not qualify for transitional treatment under § 284.223(g)(1) of the Commission's regulations adopted in Order No. 436.

ADM argues that its two transportation agreements with Panhandle qualify for transitional treatment based on the "economic substance test" in that ADM expended substantial funds on its two processing facilities in reliance on the continuance of transportation service under its agreements with Panhandle. In *CLARCO Gas Company, Inc.,*[2] *we clarified our policy concerning waivers of the restrictions in the transitional provisions of Order No. 436:*

> If gas hasn't flowed by October 9, 1985 the Commission will grant a waiver from the restrictions in the transitional provisions to the extent necessary to allow the transportation to commence if the parties executed a written gas transportation agreement prior to October 9, 1985, and expended significant funds or constructed significant facilities in *reliance on that agreement,* after the agreement was executed and prior to October 9, 1985.

We find that the facts and circumstances presented by ADM do not meet the *CLARCO* standard in that ADM did not execute written gas transportation agreements to extend its existing transportation arrangements prior to October 9, 1985. The two transportation agreements in effect prior to October 9, 1985 expired on March 15, 1986. The funds expended by ADM prior to October 9, 1985 were therefore not expended in reliance on a written transportation agreement effective beyond March 15, 1986. The two contracts expired without being extended prior to October 9, 1985, and therefore do not qualify under § 284.223(g)(1) for transitional treatment beyond March 15, 1986.[3]

Finally, ADM seeks clarification as to whether the transportation service for the facility in Mexico, Missouri qualifies for transitional treatment through September 15, 1986 based on the initial report Panhandle filed with the Commission. In that the contract was not amended to reflect such an extension, we conclude that the contract expired on March 15, 1986. The initial report did not operate to bind the parties for the reported extended term. The apparently erroneous date in the initial report does not constitute an amendment to the contract extending its term.

For the reasons stated above, we deny ADM's two requests for waiver.

By the Commission.

Kenneth F. Plumb,

Secretary.

[FR Doc. 86-11387 Filed 5-20-86 8:45 am]

BILLING CODE 6717-01-M

[2] Regulation Of Natural Gas Pipelines After Partial Wellhead Decontrol (CLARCO Gas Company, Inc.). 34 FERC ¶ 61,386 (issued March 28, 1986). 51 FR 11,468.

[3] Regulation Of National Gas Pipelines After Partial Wellhead Decontrol (U.S. Steel), 34 FERC ¶ 61,199 (issued February 13, 1986) 51. FR 6303.

[Docket No. TA86-5-29-003]

Transcontinental Gas Pipe Line Corp.; Proposed Changes in FERC Gas Tariff

May 15, 1986.

Take notice that Transcontinental Gas Pipe Line Corporation (Transco) tendered for filing on May 14, 1986, the following revised tariff Sheets to Second Revised Volume No. 1 of its FERC gas tariff:

Proposed Tariff Sheets

Second Revised Volume No. 1 (Proposed to be Effective May 1, 1986)

Alternate Fortieth Revised Sheet No. 12
Alternate Thirty-Ninth Revised Sheet No. 15
Alternate Third Revised Sheet No. 15-A

Second Revised Volume No. 1 (Subject to motion to be made effective July 1, 1986 if pending settlement not approved).

Forty-First Revised Sheet No. 12
Fortieth Revised Sheet No. 15
Fourth Revised Sheet No. 15-A

The tariff sheets proposed to be effective May 1, 1986 reflect an overall decrease from the rates in effect immediately prior to May 1, 1986 of 81.4¢ per dt in the commodity or delivery charge of Transco's CD, S-2, ACQ and PS Rate Schedules and 81.4¢ per dt in Transco's G, OG and E Rate Schedules, and 12¢ in the Demand Charges under Rate Schedule CD. The 81.4¢ CD Rate Schedule commodity decrease is composed of (1) a 75.2¢ per dt decrease in the current gas cost portion of the commodity rates; and (2) a 6.2¢ per dt decrease to reflect elimination of the Deferred Adjustment which became effective November 1, 1985 in Transco's Docket No. TA86-1-29. The demand charge decrease is due to the elimination of 25% of the demand charges of a Canadian supplier, Sulpetro Limited, which heretofore have been passed through on an "as billed" basis pursuant to an Initial Decision issued on September 3, 1985 in Docket No. TA85-1-29 which decision is pending before the Commission on exceptions.

Transco states that the instant filing reflects a voluntary implementation, on interim basis, of reduced gas costs to the level provided in its pending offer of settlement. Specifically, it is stated that the purpose of the instant filing is to reflect immediately in the commodity or delivery charge of Transco's affected rate schedules only the $2.30/dt cost of gas and 14.6¢ transmission fuel charge which is an integral part of Transco's revised Offer of Settlement (Settlement) pending in Docket No. TA85-1-29-000, *et al.,* which Settlement was filed with the Commission on May 13, 1986, and likewise to reflect the reduction in

demand charges under Rate Schedule CD by 12¢ as provided in the pending Settlement in connection with resolution of issues concerning Transco's import purchases from Sulpetro.

The instant filing is requested to be effective May 1, 1986 and, if approved, will substitute for the rates also proposed to be effective May 1, 1986 pursuant to Transco's PGA filing of March 31, 1986 in Docket No. TA86-5-29 which was accepted subject to refund by Commission order issued April 30, 1986.

By the instant filing, Transco is requesting Commission approval, for a limited interim period, to charge its customers rates based (1) on the reduced $2.30 cost of gas and (2) on the elimination of the 53.4¢ Deferred Adjustment in Transco's March 31, 1986 PGA filing in this docket. It is stated that the filing has been made in order to permit Transco's customers to benefit from the lower rates provided under Transco's proposed Settlement while the Commission is considering such Settlement. It is stated that elimination of the 53.4¢ Deferred Adjustment is requested herein in anticipation of the fact that Article II, Section 3 of the Settlement provides for a separate monthly billing procedure for certain "Transition Gas Costs" which include those amounts which would otherwise be collected through the aforementioned 53.4¢ surcharge.

Transco states further that it is willing to accept the risk of undercollections of current gas costs to the extent its gas costs exceed the $2.30/dt during the period in which Transco voluntarily elects to reflect this lower gas cost prior to Commission action on the pending settlement. Transco also states, however, that the instant request to defer collection of the 53.4¢ Deferred Adjustment on a limited interim basis is contingent upon the Commission recognizing Transco's right to future recovery, in the event that the proposed Settlement is not approved by the Commission, of the amounts Transco will not have collected as a result of voluntarily deferring collection of such Deferred Adjustment. In that event, such amounts would be transferred to the appropriate subaccount of FERC Account No. 191 for recovery in Transco's regularly scheduled May 1, 1987 PGA.

With regard to the deferred collection of the deferred adjustment, Transco states that the transferring of such unrecovered amounts to a subsequent period is consistent with the operation of Transco's PGA mechanism because such method ensures that overrecoveries or underrecoveries of amounts underlaying Deferred Adjustments are transferred to the appropriate summer or winter period. Transco states that in the event the Commission accepts the instant filing, Transco's rates will not reflect the 53.4¢ per dt Deferred Adjustment during the period May and June of 1986. Thereafter, if the proposed Settlement is not approved by the Commission, Transco estimates that based on the sales estimate utilized in its March 31, 1986 filing in Docket No. TA86-5-29, it would defer and transfer approximately $27.0 million related to the months of May and June 1986. Transco states that it is willing to forego recovery of carrying charges on any amounts which are uncollected as the result of Transco's instant filing reflecting its voluntary election for a limited interim period not to collect through rates the 53.4¢ Deferred Adjustment.

Also contained in this amended filing are three tariff sheets proposed to be effective July 1, 1986 if the pending settlement is not approved. The rates contained on these tariff sheets are idential to those appearing on the like-numbered tariff sheets which were included in Transco's March 31, 1986 PGA filing in Docket No. TA86-5-29, and which were accepted, suspend and permitted to become effective pursuant to the Commission's April 30, 1986 order. It is stated that the purpose of these tariff sheets is to allow Transco to charge such rates effective July 1, 1986 should the proposed Settlement not be approved by the Commission by that time. Transco states further that should the Settlement not be approved by July 1, 1986, Transco will move that Forty-First Revised Sheet No. 12, Fortieth Revised Sheet No. 15 and Fourth Revised Sheet No. 15-A be made effective no earlier than July 1, 1986.

Transco requests such waivers as may be necessary in order that the proposed tariff sheets be made effective on May 1, 1986 as explained herein.

Transco states that copies of the instant filing are being mailed to its jurisdictional customers, interested state commissions, and parities to the proceeding. In accordance with provisions of § 154.16 of the Commission's Regulations, copies of this filing are available for public inspection during regular business house, in a convenient form and place at Transco's main office at 2800 Post Oak Boulevard in Houston, Texas.

Transco has requested that a shortened notice period be established. Under the circumstances, the Commission finds that good cause has been shown for a shortened notice period. Therefore, any person desiring to be heard or to protest said filing should file a motion to intervene or protest with the Federal Energy Regulatory Commission, 825 North Capitol Street, NE., Washington, DC 20426, in accordance with Rule 211 and Rule 214 of the Commission's rules of practice and procedure (18 CFR § 385.211 and § 385.214). All such motions or protests should be filed on or before May 22, 1986. Protests will be considered by the Commission in determining the appropriate action to be taken, but will not serve to make protestants parties to the proceeding. Any person wishing to become a party must file a motion to intervene. Copies of this filing are on file with the Commission and are available for public inspection.

Kenneth F. Plumb,

Secretary.

[FR Doc. 86-11388 Filed 5-20-86; 8:45 am]

BILLING CODE 6717-01-M

Office of Conservation and Renewable Energy

[Case Nos. RF-003 and RF-004]

Energy Conservation Program for Consumer Products; Petitions for Waiver of Refrigerator and Refrigerator-Freezer Test Procedure from Whirlpool Corporation

AGENCY: Conservation and Renewable Energy Office, DOE.

SUMMARY: Today's notice publishes two "Petitions for Waiver" from Whirlpool Corporation (Whirlpool) of Benton Harbor, Michigan, requesting, in each case, a waiver from the Department of Energy (DOE) test procedure for refrigerators and refrigerator-freezers. Whirlpool is a manufacturer of home appliances, including refrigerator-freezers. Whirlpool has developed an electronic adaptive defrost control for refrigerator-freezers that initiates defrost cycles in response to operating conditions and usage patterns. Each petition requests DOE to grant Whirlpool relief from the DOE test procedure for refrigerators and refrigerator-freezers for its refrigerator-freezer models equipped with electronic adaptive defrost controls on the basis that the existing test procedure yields materially inaccurate estimates of the energy consumption of such units. DOE is soliciting comments, data, and information regarding the petitions.

DATE: DOE will accept comments, data, and information not later than June 20, 1986.

ADDRESSES: Written comments and statements shall be sent to: Department of Energy, Office of Conservation and Renewable Energy, Test Procedures for Consumer Products, Case Nos. RF-003 and RF-004, Mail Stop CE-132, Forrestal Building, 1000 Independence Avenue, SW., Washington, DC 20585.

FOR FURTHER INFORMATION CONTACT:

Michael J. McCabe, U.S. Department of Energy, Mail Station CE-132, Forrestal Building, 1000 Independence Avenue, SW., Washington, DC 200585 (202) 252-9127

Eugene Margolis, Esq., U.S. Department of Energy, Office of General Counsel, Mail Station GC-12, Forrestal Building, 1000 Independence Avenue, SW., Washington, DC 200585 (202) 252-9513

Background

The Energy Conservation Program for Consumer Products was established pursuant to the Energy Policy and Conservation Act (EPCA) (Pub. L. 94-163, 89 Stat. 917), as amended by the National Energy Conservation Policy Act (NECPA) (Pub. L. 96-619, 92 Stat. 3266), which requires DOE to prescribe standardized test procedures to measure the energy consumption of certain consumer products, including refrigerators and refrigerator-freezers. The intent of the test procedures is to provide a comparable measure of energy consumption that will assist consumers in making purchasing decisions. These test procedures appear at 10 CFR Part 430, Subpart B.

DOE has also prescribed procedures by which manufacturers may petition for waiver of test procedure requirements for a particular basic model of a product covered by a test procedure and the Assistant Secretary for Conservation and Renewable Energy may temporarily waive such test procedure requirements for such basic model. Waivers may be granted when one or more design characteristics of a basic model either prevent testing of the basic model according to the prescribed test procedure or lead to results so unrepresentative of the model's true energy consumption as to provide materially inaccurate comparative data. These waiver procedures appear at 10 CFR 430.27. Waivers generally remain in effect until final test procedure amendments become effective, resolving the problem that is the subject of the waiver.

Refrigerator-freezers are one of the products covered by the Federal Trade Commission's (FTC) Appliance Labeling Program. The energy consumption of refrigerator-freezers, as determined using DOE's test procedure, forms the basis of the estimated annual operating cost figures which FTC requires manufacturers of refrigerator-freezers to disclose on an EnergyGuide label on each unit to assist consumers in making a purchasing decision.

On November 14, 1984, Whirlpool filed a petition for waiver (Case No. RF-001) from the DOE test procedure for refrigerators and refrigerator-freezers on the grounds that the procedure yielded materially inaccurate estimates of the energy consumed by its refrigerator-freezers models equipped with what Whirlpool has termed electronic adaptive defrost controls (ADC). Whirlpool's ADC initiates defrost cycles on the basis of compressor run time, refrigerator and freezer door openings, and the length of the preceding defrost period. On August 23, 1985, DOE granted Whirlpool's petition. 50 FR 34186.

Whirlpool argued that the DOE test procedure has no provision for determining the interval between defrost cycles for ADC-equipped refrigerator-freezers which would be comparable to normal usage patterns. Also, the test procedure would likely underestimate the actual energy consumption of such products because low humidity conditions normally encountered within the product during the test and the lack of refrigerator and freezer compartment door openings during the test lengthens the period between defrost cycles beyond that which would be expected under normal usage conditions. Finally, this lengthening of the period between defrost cycles lengthens the duration of the test to the point that is unduely burdensome to conduct. Having evaluated the applicability of two alternate test methods, both intended to cover refrigerator-freezers equipped with so-called demand defrost controls, Whirlpool contended that no acceptable alternate test procedure existed for use in testing ADC equipped models and that the development of such an alternate test procedure should await field data reflecting the actual performances of such products under varying conditions of use and operation. DOE examined the available information and established an alternate test procedure.

On March 12, 1986, Whirlpool submitted a petition for waiver (Case No. RF-003) of DOE test procedure requirements for a new ADC-equipped basic model which is considered different from the basic model cited in the previous petition. Whirlpool's new basic model has a different capacity, 25.7 cubic feet, and does not have the SERVA-DOOR feature on the previous model.

On April 8, 1986, Whirlpool submitted a petition for waiver (Case No. RF-004) of DOE test procedure requirements for another refrigerator-freezer the Company has developed with a slightly revised adaptive defrost control system. With this design modification the actual interval between defrost cycles could be from six hours to approximately six days, whereas the ADC-equipped basic models addressed in Case Nos. RF-001 and RF-003 have an interval between defrost cycles from six hours to 12 days.

According to DOE's regulations, at 10 CFR 430.2, Whirlpool's new refrigerator-freezers constitute different "basic models" since different capacity and features affect energy consumption. Whirlpool seeks to use the same test procedure for testing its new ADC-equipped models as was granted in the earlier case discussed above. The arguments presented in the petitions as to faults with the existing DOE test procedure and the basis for an alternate procedure are the same as those presented in the previous petition.

Pursuant to paragraph (b) of 10 CFR 430.27, DOE is hereby publishing the "Petitions for Waiver" in their entirely. The petitions contain no confidential information. DOE solicits comments, data, and information respecting the petitions. The Department also is seeking comments, data and information concerning the advisability of granting a waiver of DOE test procedure requirements for all of Whirlpool's models equipped with an adaptive defrost control system as long as the defrost control itself is not changed or modified from model to model. Finally, DOE is seeking comments on the advisability of granting a waiver of DOE test procedure requirements for all of Whirlpool's models equipped with an adaptive defrost control system as long as any modifications to the defrost control are minor, i.e., adjusting the upper limit for intervals between defrost cycles.

Issued in Washington, DC, May 2, 1986.

Donna R. Fitzpatrick,

Assistant Secretary, Conservation and Renewable Energy.

March 12, 1986.

Mr. Michael J. McCabe,

Branch Chief, Testing and Evaluation, Conservation and Renewable Energy, U.S. Department of Energy, 1000 Independence Avenue, NW., Room GF-217, Washington, DC. 20585

Gentlemen:

1. *Petition for Waiver*—In accordance with 10 CFR 430.27, this is a Petition for Waiver

from the test procedure specified in 10 CFR Part 430, Subpart B, Appendix A1, adopted August 10, 1982. Whirlpool Corporation has developed and marketed a refrigerator-freezer basic model with adaptive defrost controls, that was subject of Waiver Order No. RF-001. Whirlpool has developed and is planning to market an additional refrigerator-freezer basic model with the same adaptive defrost controls as that referenced in Order No. RF-001, but which is nevertheless a different basic model because it has a differing physical or functional characteristic which affects energy consumption. Without a waiver, that refrigerator-freezer must be tested under the provisions of 10 CFR Part 430, Subpart B, Appendix A1. 10 CFR 430.22 prohibits a manufacturer from making any representation regarding energy consumption of a refrigerator-freezer that is not based on results of test under Appendix A1. Further, 16 CFR 305.4 prohibits the manufacturer from selling or offering for sale a refrigerator-freezer that does not bear an Energyguide label specifying the estimated annual operating cost for that product based upon tests conducted in accordance with Appendix A1. In as much as Whirlpool may not make an energy representation regarding refrigerator-freezers unless such representation is based upon the results of tests conducted in accordance with Appendix A1, and Appendix A1 tests will not accurately represent the energy consumption of this refrigerator-freezer with electronic defrost controls, we submit this petition.

2. *General Description of Petitioner's Business*—Whirlpool Corporation is a manufacturer of home appliances including refrigerator-freezers.

3. *Electronic Adaptive Defrost Control Design Principles*—The electronic adaptive defrost control employs a microcomputer utilizing an algorithm that initiates defrost cycles on a non-timed basis depending on compressor run time, refrigerator and freezer door openings, and the length of the preceding defrost period. The actual interval between defrost cycles with this control could be from six (6) hours to twelve (12) days. The electronic adaptive defrost control is not a demand defrost system that initiates a defrost cycle based upon actual frost on the evaporator.

4. *Basic Model Under DOE Waiver No. RF-001 Has the Same Electronic Adaptive Defrost Controls.* The electronic adaptive defrost controls on the basic model covered by Waiver No. RF-001 is identical to the electronic adaptive defrost controls on the basic model addressed by this petition. The only differences between the two models which relate to energy source, electrical characteristics, or physical or functional characteristics affecting energy consumption are that the basic model addressed by this petition does not have a SERVA-DOOR and its volume is 25.7 cubic feet. While energy consumption may, therefore, be decreased, the electronic adaptive defrost has not been modified and this Petition for Waiver is based on the same considerations as those addressed by DOE Order No RF-001.

5. *DOE Test Does Not Adequately Determine the Period between Defrost Cycles*—There is no provision in the final refrigerator-freezer test procedure, 10 CFR, Part 430, Subpart B, Appendix A1, to determine the interval between defrost cycles for a refrigerator-freezer with an adaptive defrost control which would account for compressor run time, refrigerator and freezer compartment door openings and the length of time of the previous defrost cycle which would be comparable to normal usage patterns. Under the test room conditions specified in the test-procedure, intervals between defrost cycles with the Whirlpool adaptive defrost system will be considerably longer than would be expected to be encountered in normal usage, because of low humidity and lack of refrigerator and freezer compartment door openings. Thus, test times will increase significantly and results will likely underestimate the actual energy consumption of adaptive defrost products in normal usage patterns and be misleading to consumers.

6. *DOT Test is Unduly Burdensome*—In 10 CFR Part 430, Subpart B, Appendix A1, a refrigerator-freezer test period is defined as the time span from one point during the defrost period to the corresponding point in the next defrost period. For conventional automatic defrost refrigerator-freezer, total test time required for the stabilization and test period is typically on the order of three days or less. An automatic defrost refrigerator-freezer with an anti-sweat heater switch requires four tests to determine the total per cycle energy consumption for that unit. In order to achieve a 95% confidence level for a given model, a minimum of three products must be tested. Therefore to rate a given model having an anti-sweat heater switch at a 95% confidence level takes thirty-six test days. However, in the case of adaptive defrost refrigerator-freezers, the total test time required for the stabilization and testing appears to be nine days. Since this product incorporates an anti-sweat heater switch, four tests are also required. With a minumum of three units required to estblish a 95% confidence level, approximately 108 test days are required to test an adaptive defrost control utilizing the standard test procedure. Thus the testing burden has increased by three times in order to conduct required testing for these products. Furthermore, it is likely that the potential extremely long test duration might be impossible to accomplish due to the difficulty in controlling conditions in the test room within the tolerances required by the test procedure over long time periods.

7. *DOE Test May Mislead the Public and Be Unfair to Petitioner*—Whirlpool believes that testing refrigerator-freezers having the electronic adaptive defrost control system under the test room conditions specified in the test procedure will result in intervals between defrost cycles that will be considerably longer than would be expected to be encountered in normal usage because of low humidity conditions normally encountered within the product during the test and lack of refrigerator and freezer compartment door openings. If Whirlpool Corporation were required to conduct tests in accordance with Appendix A1 on refrigerator-freezers having the electronic adaptive defrost control, the results will likely underestimate the actual energy consumption of such products in normal usage patterns for the reasons cited above. This result would be unfair to both consumers and to Whirlpool. The consumer, when comparing operating costs, might be mislead into purchasing an adaptive defrost control product based on the incorrect labeling information. Whirlpool, on the other hand, would be placed in the position of providing cost of operation information for the Energy guide label, in accordance with the test procedure, which it believes is inaccurate. Thus, if Whirlpool Corporation were to attempt to conduct tests on refrigerator-freezers with electronic adaptive defrost controls in accordance with Appendix A1, the results would likely be misleading to consumers as well as unduly burdensome to Whirlpool Corporation. Failure to grant this petition will discourage future development if innovative control systems for not only refrigerator-freezers but other products as well since Whirlpool Corporation will realize that, unless the product is capable of being tested under the existing test procedures, it may well be actually or practically precluded from testing the product in order to comply with mandatory labeling or a minimum standard requirement.

8. *Proposed Alternate Test Method*—An alternate test procedure was prescribed in the previous Whirlpool adaptive defrost case (Waiver Order No. RF001) at 50 FR 34189 (August 23, 1985), paragraph (2). This equation is based upon a method of energy testing developed for timer-controlled defrost systems, but modified by incorporating a factor representing frequency of defrost for the control system being tested. The factor of .33 was specified by the Department of Energy using field test data for approximately 20 units located in southern Florida, Indiana and Michigan over a period of nine months. Ideally, the appropriate factor to represent defrost frequency should come from a laboratory test designed to simulate the "average" field usage. Until a test method is designed to determine the length of time between defrost cycles, field test data should be used to determine frequency of defrost. Since the adaptive defrost control on the basic model covered by Waiver No. RF-001 is identical to the adaptive defrost control on the basic model referred to in this petition, and the two models are similar with the exception of the SERVA-DOOR and interior volume, Whirlpool believes the factor of .33 specified in Waiver No. RF-001 should be applicable to this basic model as well.

9. *Public Policy*—The granting of this waiver will serve to further the nation's energy conservation policy by encouraging manufacturers to develop new and innovative control systems to provide more energy-efficient appliances which, in the long run, will serve to reduce the energy consumption of products.

10. *Other Manufacturers*—White Consolidated Industries has filed an Application for Temporary Exception and a Petition for Waiver on November 1, 1985, for the Frigidaire Model FPCI18TDWO which incorporates a non-timed initiated defrost system.

If additional information is required, please contact Andrew Takacs (616/926-3219) or Nancy Clifton (616/926-5490).

Respectfully,

A.J. Takacs.

April 8, 1986.

Mr. Michael J. McCabe,
Branch Chief, Testing and Evaluation, Conservation and Renewable Energy, U.S. Department of Energy, 1000 Independence Avenue, NW., Room GF-217, Washington, DC 20585

Gentlemen:

1. *Petition for Waiver*—In accordance with 10 CFR 430.27, this is a Petition for Waiver from the test procedure specified in 10 CFR Part 430, Subpart B, Appendix A1, adopted August 10, 1982. Concurrently with the filing of this Petition for Waiver, Whirlpool Corporation is filing an Application for Temporary Exception with the Office of Hearings and Appeals of the Department of Energy. A copy of the Application for Temporary Exception is attached hereto. Whirlpool Corporation has developed and marketed a refrigerator-freezer basic model with adaptive defrost controls, that was the subject of Waiver Order No. RF-001. Whirlpool has developed and is planning to market an additional refrigerator-freezer basic model with the same adaptive defrost controls as that referenced in Order No. RF-001, but which is nevertheless a different basic model because it has a differing physical or functional characteristic which affects energy consumption. Whirlpool filed a Petition for Waiver for that model on March 12, 1986.

Whirlpool has developed and is planning to market a new refrigerator-freezer with a slightly revised adaptive defrost control. Without a waiver, that refrigerator-freezer must be tested under the provisions of 10 CFR Part 430, Subpart B. Appendix A1. 10 CFR 430.22 prohibits a manufacturer from making any representation regarding energy consumption of a refrigerator-freezer that is not based on results of tests under Appendix A1. Further, 16 CFR 305.4 prohibits the manufacturer from selling or offering for sale a refrigerator-freezer that does not bear an Energyguide label specifying the estimated annual operating cost for that product based upon tests conducted in accordance with Appendix A1. In as much as Whirlpool may not make an energy representation regarding refrigerator-freezers unless such representation is based upon the results of tests conducted in accordance with Appendix A1, and Appendix A1 tests will not accurately represent the energy consumption of this refrigerator-freezer with electronic defrost controls, we submit this petition.

2. *General Description of Petitioner's Business*—Whirlpool Corporation is a manufacturer of home appliances including refrigerator-freezers.

3. *Electronic Adaptive Defrost Control Design Principles*—The electronic adaptive defrost control employs a microcomputer utilizing an algorithm that initiates defrost cycles on a non-timed basis depending on compressor run time, refrigerator and freezer door openings, and the length of the preceding defrost period. The actual interval between defrost cycles with this control could be from six (6) hours to approximately six (6) days (the basic model addressed by Order No. RF-001 has an actual interval between defrost cycles from six hours to 12 days). This change is expected to have a minor effect on energy savings. The electronic adaptive defrost control is not a demand defrost system that initiates a defrost cycle based upon actual frost on the evaporator.

4. *DOE Test Does Not Adequately Determine the Period between Defrost Cycles*—There is no provision in the final refrigerator-freezer test procedure, 10 CFR, Part 430, Subpart B, Appendix A1, to determine the interval between defrost cycles for a refrigerator-freezer with an adaptive defrost control which is based upon compressor run time, refrigerator and freezer compartment door openings and the length of time of the previous defrost cycle which would be comparable to normal usage patterns. Under the test room conditions specified in the test-procedure, intervals between defrost cycles with the Whirlpool adaptive defrost system will be considerably longer than would be expected to be encountered in normal usage, because of low humidity and lack of refrigerator and freezer compartment door openings. Thus, test times will increase significantly and results will likely underestimate the actual energy consumption of adaptive defrost products in normal usage patterns and be misleading to consumers.

5. *DOE Test is Unduly Burdensome*—In 10 CFR Part 430, Subpart B, Appendix A1, a refrigerator-freezer test period is defined as the time span from one point during the defrost period to the corresponding point in the next defrost period. For a conventional automatic defrost refrigerator-freezer, total test time required for the stabilization and test period is typically on the order of three days or less. An automatic defrost refrigerator-freezer with an anti-sweat heater switch requires four tests to determine the total per cycle energy consumption for that unit. In order to achieve a 95% confidence level for a given model, a minimum of three products must be tested. Therefore to rate a given model having an anti-sweat heater switch at a 95% confidence level takes thrity-six test days. However, in the case of adaptive defrost refrigerator-freezers, the total test time required for the stabilization and testing appears to be nine days. Since this product incorporates an anti-sweat heater switch, four tests are also required. With a minimum of three units required to establish a 95% confidence level, approximately 108 test days are required to test an adaptive defrost control utilizing the standard test procedure. Thus the testing burden has increased by three times in order to conduct required testing for these products. Furthermore, it is likely that the potential extremely long test duration might be impossible to accomplish due to the difficulty in controlling conditions in the test room within the tolerances required by the test procedure over long time periods.

6. *DOE Test May Mislead the Public and Be Unfair to Petitioner*—Whirlpool believes that testing refrigerator-freezers having the electronic adaptive defrost control system under the test room conditions specified in the test procedure will result in intervals between defrost cycles that will be considerably longer than would be expected to be encountered in normal usage because of low humidity conditions normally encountered within the product during the test and lack of refrigerator and freezer compartment door openings. If Whirlpool Corporation were required to conduct tests in accordance with Appendix A1 on refrigerator-freezers having the electronic adaptive defrost control, the results will likely underestimate the actual energy consumption of such products in normal usage patterns for the reasons cited above. This result would be unfair to both consumers and to Whirlpool. The consumer, when comparing operating costs, might be mislead into purchasing an adaptive defrost control product based on the incorrect labeling information. Whirlpool, on the other hand, would be placed in the position of providing cost of operation information for the Energyguide label, in accordance with the test procedure, which it believes is inaccurate. Thus, if Whirlpool Corporation were to attempt to conduct tests on refrigerator-freezers with electronic adaptive defrost controls in accordance with Appendix A1, the results would likely be misleading to consumers as well as unduly burdensome to Whirlpool Corporation. Failure to grant this petition will discourage future development if innovative control systems for not only refrigerator-freezers but other products as well since Whirlpool Corporation will realize that, unless the product is capable of being tested under the existing test procedures, it may well be actually or practically precluded from testing the product in order to comply with mandatory labeling or a minimum standard requirement.

7. *Proposed Alternate Test Method*—An alternate test method was prescribed in the Whirlpool case (Case No. RF-001) at 50 FR 34189 (August 23, 1985).

The equation used is based upon a method of energy testing developed for timer-controlled defrost systems, but modified by incorporating a factor representing frequency of defrost for the control system being tested. The factor of .33 was specified by the Department of Energy using field test data for approximately 20 units located in southern Florida, Indiana and Michigan over a period of nine months. Ideally, the appropriate factor to represent defrost frequency should come from a laboratory test designed to simulate "average" field usage. Until a test method is designed to determine the length of time between defrost cycles, field test data should be used to determine frequency of defrost. Since a new adaptive defrost control system is being applied, Whirlpool is planning to initiate another field test program to determine the time between defrosts. The sample will consist of approximately 25 products with approximately one-third in each of three locations, southern Florida, southern Indiana and Michigan. Whirlpool would be receptive to the use of an estimated factor representing the frequency of defrost until tests are completed.

8. *Public Policy*—The granting of this waiver will serve to further the nation's energy conservation policy by encouraging manufacturers to develop new and innovative control systems to provide more energy-efficient appliances which, in the long run, will serve to reduce the energy consumption of products.

9. *Other Manufacturers*—White Consolidated Industries has filed an Application for Temporary Exception and a Petition for Waiver on November 1, 1985, for the Frigidaire Model FPCI18TDWO which incorporates a non-timed initiated defrost system.

If additional information is required, please contact Andrew Takacs (616/926-3219) or Nancy Clifton (616/926-5490).

Respectfully,

A.J. Takacs.

[FR Doc. 86-11404 Filed 5-20-86; 8:45 am]

BILLING CODE 6450-01-M

[Case No. WH-003]

Energy Conservation Program for Consumer Products; Notice of Modification of a Decision and Order Granting Waiver From Water Heater Test Procedures to Ford Products Corp.

AGENCY: Department of Energy.

ACTION: Modification of a decision and order.

SUMMARY: The Decision and Order [Case No. WH-003] granting Ford Products Corporation a waiver for its Models CF and FG oil-fired water heaters from the existing DOE water heater test procedures is hereby modified.

FOR FURTHER INFORMATION CONTACT:

Michael J. McCabe, U.S. Department of Energy, Office of Conservation and Renewable Energy, Mail Station CE-132, Forrestal Building, 1000 Independence Avenue, SW., Washington, DC 20585, (202) 252-9127

Eugene Margolis, Esq., U.S. Department of Energy, Office of General Counsel, Mail Station GC-12, Forrestal Building, 1000 Independence Avenue, SW., Washington, DC 20585, (202) 252-9513.

SUPPLEMENTARY INFORMATION:

In accordance with subparagraph (iii) of Ford's Decision and Order (50 FR 50678), notice is hereby given of the issuance of modification to the Decision and Order set out below. In the Decision and Order, Ford Products Corporation has been granted a waiver for its Models CF and FG oil-fired water heaters, permitting the company to use a "simulated use" test method in lieu of the "cold-start recovery" test method in the existing test procedure. Today's notice makes some technical corrections to the Ford Decision and Order.

Issued in Washington, DC, April 25, 1986.

Donna R. Fitzpatrick,

Assistant Secretary, Conservation and Renewable Energy.

In the Matter of Ford Products Corporation; Case No. WH-003.

The Energy Conservation Program for Consumer Products was established pursuant to the Energy Policy and Conservation Act, Pub. L. 94-163, 89 Stat. 917, as amended by the National Energy Conservation Policy Act, Pub. L. 95-619, 92 Stat. 3266, which requires the Department of Energy (DOE) to prescribe standardized test procedures to measure the energy consumption of certain consumer products, including water heaters. The intent of the test procedures is to provide a comparable measure of energy consumption that will assist consumers in making purchase decisions. These test procedures appear at 10 CFR Part 430, Subpart B.

Section 430.27 allows the Department of Energy to waive temporarily test procedures for a particular basic model when a petitioner shows that the basic model contains one or more design characteristics which prevent testing of the basic model according to the prescribed test procedures or when the prescribed test procedures may evaluate the basic model in a manner so unrepresentative of its true energy consumption characteristics as to provide materially inadquate comparative data. 45 FR 64108 (September 26, 1980).

Ford Products Corporation (Ford), filed a "Petition for Waiver" in accordance with 430.27 or 10 CFR Part 430. The Ford petition asked to rate its oil-fired water heaters in the same manner that was allowed to a previous petitioner, Bock Water Heaters, Inc. Ford stated that its CF and FG Model series oil-fired water heaters have high thermal mass which leads to unrepresentative values of recovery efficiency. Ford sought relief from the DOE "cold-start" recovery efficiency test methodology. DOE published in the **Federal Register** the Ford petition and solicited comments, data, and information respecting the petition. 50 FR 32615 (August 13, 1985). No comments were received. DOE consulted with the Federal Trade Commission on August 20, 1985, concerning the Ford petition.

In the Bock Decision and Order, DOE allowed Bock to determine the recovery efficiency of its oil-fired water heaters by use of a "simulated use" test method (50 FR 47106, November 14, 1985). Accordingly, in the interest of consistency, and since DOE determined that the existing test method is inappropriate with regard to high thermal mass water heaters, Ford was allowed the use of the "simulated use" test method for its oil-fired models. The Ford Decision and Order was issued November 23, 1985. 50 FR 50678 (December 11, 1985).

Assertions and Determinations

Ford has objected to the allowed test method. Ford asserted in its letter of January 13, 1986, that the starting temperature and consecutive draw schedule of the allowed test method are inappropriate for oil-fired water heaters, and inaccurate estimates of recovery efficiency of up to 10 percentage points are possible. Further, Ford stated that this inappropriateness exists because the allowed test method was developed for heat pump water heaters. Ford suggested that it be allowed the use of the existing test procedure modified by a "warm" start method, i.e., where the start of the recovery efficiency test occurs when thermal equilibrium is reached.

By letter dated February 14, 1986, Bock responded to Ford. Bock believed the "simulated use" method, as granted to it, is acceptable when testing oil water heaters. Further, Bock does not agree with the magnitude of the possible inaccuracies stated in the Ford letter. Finally, Bock states that the "warm" start test method is far more complex than the "simulated use" method and does not show results which would be usable by the consumer as a comparison of operating characteristics.

DOE has asked the National Bureau of Standards (NBS) to investigate the Ford claims by testing a oil-fired water heater using the "simulated use" test method granted to Bock and Ford. The results of this investigation indicate that the method described in the Decision and Order is somewhat inappropriate regarding starting temperature for oil-fired water heaters. However, rather than prescribe a completely different test method, as Ford suggests, DOE believes the better remedy is to modify the Decision and Order by making some technical corrections. Specifically, the original Decision and Order requiring a "simulated use" test to begin immediately after cutout of the burner is replaced with a "simulated use" test to begin after the mean tank temperature reaches thermal equilibrium. Regarding the matter of the accentuated jacket losses caused by the three consecutive draw format, NBS determined, by testing, that the variability due to different draw format is well below the expected variability of the test data. Accordingly, today's notice does not modify the Ford Decision and Order regarding draw format.

It is therefore ordered that:

(1) The November 22, 1985, Decision and Order granting a waiver from water heater test procedures to Ford Products Corporation (50 FR 50678, December 11, 1985) is modified by revising subparagraph (i) as follows:

(i) Section 3.3.1 of Appendix E of 10 CFR Part 430, is waived for Ford Products Corporation, and the company is permitted to use the following provision.

Recovery Efficiency for Oil Water Heaters by the Simulated Use Methods

(1) The simulated use test involves withdrawing water from the hot water outlet of the water heater in three separate consecutive water draws, 21.4 gallons ±0.5 gallon of water shall be withdrawn from the water heater. The third water draw shall be of a sufficient volume to bring the total volume of water withdrawn from the water heater by means of these three water draws to 64.3 gallons ±0.5 gallon. Water shall be withdrawn at a rate of 3.0 ±0.25 gallons per minute for each of the three water draws. All water volume measurements shall be made

using the water flow meter specified in section 2 of Appendix E of 10 CFR Part 430.

Begin the simulated use test at the time a thermal equilibrium is achieved at the maximum mean tank temperature (in 4 places) by recording the mean tank temperature (T_{rs}), in degrees F, recording the time, recording the water meter reading, commencing measurement of electrical and fossil fuel energy consumption by the water heater and starting the first water draw. During this draw and during all subsequent draws measure the temperature of the inlet and outlet water every minute commencing one minute after the start of the draw until the draw is complete. Immediately upon the conclusion of the first water draw record the water meter reading. Determine the first draw average inlet and outlet water temperatures (T_{ID1} and T_{ID1} respectively) by averaging the measured temperatures during the first draw. At the time a thermal equilibrium is achieved at the maximum mean tank temperature after the cutout following the recovery of the first water draw begin the second water draw. Immediately upon the conclusion of the second water draw record the water meter reading. Determine the second draw average inlet and outlet water temperatures (T_{ID2} and T_{TD2} respectively) by averaging the measured temperatures during the second draw. At the time a thermal equilibrium is achieved at the maximum mean tank temperature after the cutout following the recovery of the second water draw begin the third water draw. Immediately upon the conclusion of the third draw record the water meter reading and determine the third draw average inlet and outlet water temperatures (T_{ID3} and T_{TD3} respectively) by averaging the measured temperatures during the third draw. At the time a thermal equilibrium is achieved at the maximum mean tank temperature after the cutout following the recovery of third draw, record the total amount of energy consumed by the water heater since the start of the test (Z_R), in Btu's (where 3,412 Btu equals 1 kilowatt-hours).

Determine the mean of the three outlet water temperature averages (T_{TWD}) and the mean of the three inlet water temperature averages (T_{IWD}), in degrees F. Determine the total amount of water withdrawn from the water heater over all three water draws (V_{WD}), in gallons, from the appropriate recorded water meter readings.

(2) This modification of waiver is based upon the presumed validity of statements, allegations, and documentary materials submitted by applicant. This modification of waiver may be revoked or modified at any time upon a determination that the factual basis underlying the application is incorrect.

Issued in Washington, DC, April 25, 1986.

Donna R. Fitzpatrick,

Assistant Secretary, Conservation and Renewable Energy.

[FR Doc. 86-11403 Filed 5-20-86; 8:45 am]

BILLING CODE 6450-01-M

ENVIRONMENTAL PROTECTION AGENCY

[OPP-36120; FRL-3017-9]

Addenda on Data Reporting to Pesticide Assessment Guidelines

AGENCY: Environmental Protection Agency (EPA).

ACTION: Request for Comments.

SUMMARY: EPA is making available, for public comment, proposed addenda to the following studies in the Pesticide Assessment Guidelines: Freshwater and marine invertebrate and vertebrate toxicity, chronic toxicity(dog), terrestrial field dissipation and plant metabolism. The addenda would supersede paragraphs in the Guidelines on data reporting and would provide a format for the preparation of study reports by those submitting data to EPA. This would increase the efficiency of pesticide registration and other regulatory activities. Copies of the proposed addenda are available at the address listed below for the Information Services Section.

DATE: Comments, identified by the document control number OPP-36120, must be received on or before July 21, 1986.

ADDRESS: Submit three copies of written comments, identified with the document control number "OPP-36120," by mail to:

Information Services Section, Program Management and Support Division (TS-757C), Office of Pesticide Programs, Environmental Protection Agency, 401 M St., SW., Washington, DC 20460.

In person, deliver comments to: Rm. 236, CM #2, 1921 Jefferson Davis Highway, Arlington, Va.

Information submitted in any comment concerning this notice may be claimed confidential by marking any part or all of that information as "Confidential Business Information" (CBI). Information so marked will not be disclosed except in accordance with procedures set forth in 40 CFR Part 2. A copy of the comment that does not contain CBI must be submitted for inclusion in the public record. Information not marked confidential may be disclosed publicly by EPA without prior notice to the submitter. All written comments will be available for public inspection in Rm. 236 at the address given above, from 8 a.m. to 4 p.m., Monday through Friday, excluding legal holidays.

Copies of the draft guidelines are also available at this address.

FOR FURTHER INFORMATION CONTACT:

Elizabeth M.K. Leovey, Hazard Evaluation Division (TS-769C), Office of Pesticide Programs, Environmental Protection Agency, 401 M St., SW., Washington, DC 20460.

Office location and telephone number: Rm. 807, Crystal Mall #2, 1921 Jefferson Davis Highway, Arlington, VA, (703-557-0576).

SUPPLEMENTARY INFORMATION: The Pesticide Assessment Guidelines describe protocols for performing tests to support the registration of pesticides under the Federal Food, Drug, and Cosmetic Act and the Federal Insecticide, Fungicide, and Rodenticide Act. A description of the organization of these Guidelines and their relationship to data requirements, along with the necessary information for ordering them from the National Technical Information Service, appears in 40 CFR 158.115, published in the **Federal Register** of October 24, 1984 (49 FR 42856). The Data Reporting addenda will clarify sections in the Guidelines on data reporting and provide a format to guide pesticide registrants in report preparation resulting in consist reports. This will reduce the time spent by the Agency in reorganizing data, retrieving information, and resolving misunderstandings.

This is the second set of Data Reporting addenda which has been available for public comment. Public comment on the initial set of eight Data Reporting Guidelines was requested in the **Federal Register** of July 31, 1985 (50 FR 31010) and these comments are being reviewed. The specific subdivisions and series now being considered are: Subdivision E, Series 72-1 to 72-5 (Acute Toxicity of Freshwater Fish, Acute Toxicity Test for Freshwater Acquatic Invertebrates, Acute Toxicity Test for Estuarine and Marine Organisms, Acute Toxicity Test for Shrimp, Oyster Embryo Test, Shell Deposition Study for Oyster, Fish Early Life-Stage, Aquatic Invertebrate Life-Cycle, and Life-Cycle Test for Fish); Subdivision F, Series 83-1 (Chronic (Subchronic) Dog); Subdivision N, Series 164-1 (Terrestrial Field Dissipation Studies); and Subdivision O, Series 171-4 (a) (1) and (2) (Nature of the Residue: Plants).

Drafts have been sent to a number of organizations for preliminary comment and revisions were made in response to these comments. A list of the organizations, a copy of the comments and the Agency's response are available from the Information Services Section at the address given above. Comments on this set of reporting formats will be considered by the Agency in preparing a

final version which will be published by the National Technical Information Service.

Dated: April 28, 1986.

John W. Melone,

Director, Hazard Evaluation Division, Office of Pesticide Programs.

[FR Doc. 86-11072 Filed 5-20-86; 8:45 am]

BILLING CODE 6560-50-M

[OPTS-59764; FRL-3014-1]

Certain Chemicals Premanufacture Notices

Correction

In FR Doc. 86-10443 beginning on page 17235 in the issue of Friday, May 9, 1986, make the following correction:

On page 17236, in the first column, in the tenth line, the premanufacture notice number for Dynamit Nobels Chemical, Inc. was omitted and should read "Y 86-129".

BILLING CODE 1505-01-M

[FRL-3019-3]

An Open Meeting of the New Source Performance Standards for Residential Wood Combustion Units Negotiated Rulemaking Advisory Committee

As required by section 9(a)(2) of the Federal Advisory Committee Act (Pub. L. 92-463), EPA is giving notice of an open meeting of the Advisory Committee on New Source Performance Standards for Residential Wood Combustion Units.

The meeting is scheduled on June 11 and 12, 1986, and will be held at the National Institute for Dispute Resolution, 1901 L Street, NW., Suite 600, Washington, DC 20036. Each day the meeting will begin at 9:00 a.m. and will run until completion.

The purpose of the June meeting is to work on substantive issues, including: (1) Catalyst replacement (what policies should be applied), (2) selecting the best developed technology, and (3) deciding on the level of the standard (including whether there should be separate standards for catalytic and non-catalytic stoves). At this meeting, we anticipate the group will continue working on the draft language of the proposed rule, possibly revisiting some of the issues from prior meetings.

If interested in attending, or in receiving more information, please contact Kathy Tyson at (202) 382-5352.

Dated: May 14, 1986.

Milton Russell,

Assistant Administrator for Policy, Planning and Evaluation.

[FR Doc. 86-11518 Filed 5-20-86; 8:45 am]

BILLING CODE 6560-50-M

FEDERAL EMERGENCY MANAGEMENT AGENCY

Agency Information Collection Submitted to the Office of Management and Budget for Clearance

The Federal Emergency Management Agency (FEMA) has submitted to the Office of Management and Budget the following information collection package for clearance in accordance with the Paperwork Reduction Act (44 U.S.C. Chapter 35).

Type: Extension of 3067-0125

Title: Request for Loan Information

Abstract: Used to obtain information required to determine fair and equitable sales price of a mobile home unit to a disaster victim. The ability to borrow money commercially is an important factor in determining the final sales price

Type of Respondents: Individual or households, small businesses or organizations

Number of Respondents: 500

Burden Hours: 83.

Copies of the above information collection request and supporting documentation can be obtained by calling or writing the FEMA Clearance Officer, Linda Shiley, (202) 464-2624, 500 C. Street SW., Washington, DC 20472.

Comments should be directed to Mike Weinstein, Desk Officer for FEMA, Office of Information and Regulatory Affairs, OMB, Rm. 3235, New Executive Office Building, Washington, DC 20503.

Dated: May 14, 1986.

Walter A. Girstantas,

Director, Administrative Support.

[FR Doc. 86-11367 Filed 5-20-86; 8:45 am]

BILLING CODE 6718-01-M

Agency Information Collection Submitted to the Office of Management and Budget for Clearance

The Federal Emergency Management Agency (FEMA) has submitted to the Office of Management and Budget the following information collection package for clearance in accordance with the Paperwork Reduction Act (44 U.S.C. Chapter 35).

Type: Extension of 3067-0163

Title: Individual and Family Grant (IFG) Program Information

Abstract: The forms presented for reapproval are checklists, reviews, and other management tools recommended for use by FEMA regional staff in fulfilling their requirements for monitoring and providing statistical reports on the IFG program. Some of the information is obtained from the State implementing the particular IFG program

Type of Respondents: State or local governments

Number of Respondents: 150

Burden Hours: 2,487.5.

Copies of the above information collection request and supporting documentation can be obtained by calling or writing the FEMA Clearance Officer, Linda Shiley, (202) 464-2624, 500 C. Street SW., Washington, DC 20472.

Comments should be directed to Mike Weinstein, Desk Officer for FEMA, Office of Information and Regulatory Affairs, OMB, Rm. 3235, New Executive Office Building, Washington, DC 20503.

Dated: May 14, 1986.

Walter A. Girstantas,

Director, Administrative Support.

[FR Doc. 86-11368 Filed 5-20-86; 8:45 am]

BILLING CODE 6718-01-M

FEDERAL RESERVE SYSTEM

Financial Institutions, Inc.; Application To Engage de Novo in Permissible Nonbanking Activities

The company listed in this notice has filed an application under §§ 225.23(a)(1) of the Board's Regulation Y (12 CFR 225.23(a) (1)) for the Board's approval under section 4(c)(8) of the Bank Holding Company Act (12 U.S.C. 1843(c)(8)) and § 225.21(a) of Regulation Y (12 CFR 225.21(a) to commence or to engage *de novo,* either directly or through a subsidiary, in a nonbanking activity that is listed in § 225.25 of Regulation Y as closely related to banking and permissible for bank holding companies. Unless otherwise noted, such activities will be conducted throughout the United States.

The application is available for immediate inspection at the Federal Reserve Bank indicated. Once the application has been accepted for processing, it will also be available for inspection at the offices of the Board of Governors. Interested persons may express their views in writing on the question whether consummation of the

proposal can "reasonably be expected to produce benefits to the public, such as greater convenience, increased competition, or gains in efficiency, that outweigh possible adverse effects, such as undue concentration of resources, decreased or unfair competition, conflicts of interests, or unsound banking practices." Any request for a hearing on this question must be accompanied by a statement of the reasons a written presentation would not suffice in lieu of a hearing, identifying specifically any questions of fact that are in dispute, summarizing the evidence that would be presented at a hearing, and indicating how the party commenting would be aggrieved by approval of the proposal.

Unless otherwise noted, comments regarding the application must be received at the Reserve Bank indicated or the offices of the Board of Governors not later than June 6, 1986.

A. **Federal Reserve Bank of New York** (A. Marshall Puckett, Vice President) 33 Liberty Street, New York, New York 10045:

1. *Financial Institutions, Inc.*, Warsaw, New York; to engage through its subsidiary Financial Institutions Services, Inc., Warsaw, New York, in (1) acting as agent with agent with respect to any insurance, including but not limited to credit-related insurance, at offices of Applicant's bank subsidiaries that are located in communities with populations of 5,000 or less pursuant to section 4(c)(8)(C)(i) of the Bank Holding Company Act ("Act") and § 225.25(b)(8)(ii) of the Board's Regulation Y, inasmuch as Applicant's principal place of business is The Village of Warsaw, New York, the population of which was 3,619 in the 1980 decennial census, and (2) acting as agent, at offices of Applicant's subsidiaries located in communities with populations exceeding 5,000, with respect to life, disability and accident and health insurance directly related to extensions of credit by applicant's bank subsidiaries and any future non-bank subsidiaries pursuant to section 4(c)(8)(A) of the Act and § 225.25(b)(8)(A) of the Board's Regulation Y. The general insurance agency activities will be conducted in the geographic areas served by offices of subsidiaries of Applicant located in communities in New York state with populations of 5,000 or less. The credit insurance agency activities will be conducted in geographic areas served by offices of Applicant's subsidiaries, including offices located in communities with populations in excess of 5,000.

Board of Governors of the Federal Reserve System, May 15, 1986.

William W. Wiles,

Secretary of the Board.

[FR Doc. 86-11373 Filed 5-20-86; 8:45 am]

BILLING CODE 6210-01-M

Marble Financial Corp. et al.; Formations of; Acquisitions by; and Mergers of Bank Holding Companies

The companies listed in this notice have applied for the Board's approval under section 3 of the Bank Holding Company Act (12 U.S.C. 1842) and § 225.14 of the Board's Regulation Y (12 CFR 225.14) to become a bank holding company or to acquire a bank or bank holding company. The factors that are considered in acting on the applications are set forth in section 3(c) of the Act (12 U.S.C. 1842(c)).

Each application is available for immediate inspection at the Federal Reserve Bank indicated. Once the application has been accepted for processing, it will also be available for inspection at the offices of the Board of Governors. Interested persons may express their views in writing to the Reserve Bank or to the offices of the Board of Governors. Any comment on an application that requests a hearing must include a statement of why a written presentation would not suffice in lieu of a hearing, identifying specifically any questions of fact that are in dispute and summarizing the evidence that would be presented at a hearing.

Unless otherwise noted, comments regarding each of these applications must be received not later than June 12, 1986.

A. **Federal Reserve Bank of Boston** (Robert M. Brady, Vice President) 600 Atlantic Avenue, Boston, Massachusetts 02106:

1. *Marble Financial Corporation*, Rutland, Vermont; to become a bank holding company by acquiring 100 percent of the voting shares of Marble Bank, Rutland, Vermont.

B. **Federal Reserve Bank of Cleveland** (Lee S. Adams, Vice President) 1455 East Sixth Street, Cleveland, Ohio 44101:

1. *Cole Holding Company*, Harlan, Kentucky; to become a bank holding company be acquiring 35.5 percent of the voting shares of Harco Bankshares, Inc., Harlan, Kentucky, and thereby indirect acquire 35.5 percent of the voting shares of the Harlan National Bank, Harlan, Kentucky.

C. **Federal Reserve Bank of** (Lloyd W. Bostian, Jr., Vice President) 701 East Byrd Street, Richmond, Virginia 23261:

1. *CB&T Financial Corp.*, Fairmont, West Virginia; to acquire 100 percent of the voting shares of The Oak Mound Bank, Clarksburg, West Virginia.

2. *National Bankshares, Inc.*, Blacksburg; to acquire 100 percent of the voting shares of the National Bank of Blacksburg, Blacksburg, Virginia.

D. **Federal Reserve Bank of Atlanta** (Robert E. Heck, Vice President) 104 Marietta Street, N.W., Atlanta, Georgia 30303:

1. *Farmers and Merchants Corporation*, Forest, Mississippi; to acquire 17.6 percent of the voting shares of First Mississippi National Corporation, Hattiesburg, Mississippi.

2. *Villa Rica Bancorp, Inc.*, Villa Rica, Georgia; to become a bank holding company by acquiring 100 percent of the voting shares of bank of Villa Rica, Villa Rica, Georgia.

E. **Federal Reserve Bank of Minneapolis** (Bruce J. Hedblom, Vice President) 250 Marquette Avenue, Minneapolis, Minnesota 55480:

1. *Treasure Bancorp, Inc.*, Plentywood, Montana; to become a bankholding company by acquiring 100 percent of the voting shares of Reserve Enterprises, Inc., Plentywood, Montana, and thereby indirectly acquiring Montana National Bank of Plentywood, Plentwood, Montana.

Board of Governors of the Federal Reserve System, May 15, 1986

William W. Wiles,

Secretary of the Board.

[FR Doc. 86-11373 Filed 5-20-86; 8:45 am]

BILLING CODE 6210-01-M

DEPARTMENT OF HEALTH AND HUMAN SERVICES

Food and Drug Administration

Advisory Committees; Meetings

AGENCY: Food and Drug Administration.

ACTION: Notice.

SUMMARY: This notice announces forthcoming meetings of public advisory committees of the Food and Drug Administration (FDA). This notice also summarizes the procedures for the meetings and methods by which interested persons may participate in open public hearings before FDA's advisory committees.

Meetings: The following advisory committee meetings are announced:

Radiologic Devices Panel

Date, time, and place. June 9, 9 a.m., Rm. 416 12720 Twinbrook Parkway, Rockville, MD.

Type of meeting and contact person. Open public hearing, 9 a.m. to 10 a.m.;

open committee discussion, 10 a.m. to 11 a.m.; closed committee deliberations, 11 a.m. to 12 a.m.; open committee discussion, 1 p.m. to 4:30 p.m.; Robert A. Phillips, Center for Devices and Radiological Health (HFZ-430), Food and Drug Administration, 8757 Georgia Ave., Silver Spring, MD 20910, 301-427-7514.

General function of the committee. The committee reviews and evaluates available data on the safety and effectiveness of devices and makes recommendations for their regulation.

Agenda—Open public hearing. Interested persons may present data, information, or views, orally or in writing, on issues pending before the committee. Those desiring to make formal presentations should notify the contract person before June 1, and submit a brief statement of the general nature of the evidence or argument they wish to present, the names and addresses of proposed participants, and an indication of the approximate time required to make their comments.

Open committee discussion. The committee will discuss premarket approval applications for magnetic resonance imaging devices.

Closed committee deliberations. The committee may discuss trade secret or confidential commercial information relevant to premarket approval applications for magnetic resonance imaging devices. This portion of the meeting will be closed to permit discussion of this information (5 U.S.C. 552b(c)(4)).

Orthopedic and Rehabilitation Devices Panel

Date, time, and place. June 19, 9:30 a.m. and June 20, 9 a.m., North Auditorium, Health and Human Services Bldg., 330 Independence Ave. SW. (enter at C St.), Washington, DC.

Type of meeting and contact person. Open public hearing, June 19, 9:30 a.m. to 10:30 a.m.; open committee discussion, 10:30 a.m. to 4 p.m.; closed presentation of data, 4 p.m. to 5 p.m.; open public hearing, June 20, 9 a.m. to 10 a.m.; open committee discussion 10 a.m. to 3 p.m; closed presentation of data, 3 p.m. to 4 p.m.; Sherry Phillips, Center for Devices and Radiological Health (HFZ-410), Food and Drug Administration, 8757 Georgia Ave., Silver Spring, MD 20910, 301-427-7238.

General function of the committee. The committee reviews and evaluates available data on the safety and effectiveness of devices and makes recommendations for their regulation.

Agenda—Open public hearing. Interested persons may present data, information, or views, orally or in writing, on issues pending before the committee. Those desiring to make formal presentations should notify the contact person before June 12, and submit a brief statement of the general nature of the evidence or arguments they wish to present, the names and addresses of proposed participants, and an indication of the approximate time required to make their comments.

Open committee discussion. The committee will discuss premarket approval applications (PMA's) for prosthetic ligament devices and a neuromuscular stimulation device for the treatment of scoliosis. The committee may also discuss guidelines for evaluation of prosthetic ligament devices, electronic bone growth stimulation devices, and a PMA for bone cement.

Closed presentation of data. The committee may review and/or discuss trade secret and/or confidential commercial information relevant to PMA's. This portion of the meeting will be closed to permit discussion of this information (5 U.S.C. 552b(c)(4)).

Allergenic Products Advisory Committee

Date, time, and place. June 26 and 27, 8:30 a.m., Conference Rm. 6, Bldg. 31C, National Institutes of Health, 9000 Rockville Pike, Bethesda, MD.

Type of meeting and contact person. Open public hearing, June 26, 8:30 a.m. to 9:30 a.m.; open committee discussion, June 26, 9:30 a.m. to 5 p.m.; closed committee discussion, June 27, 8:30 a.m. to 2 p.m.; Clay Sisk, Center for Drugs and Biologics (HFN-32), Food and Drug Administration, 5600 Fishers Lane, Rockville, MD 20857, 301-443-4695.

General function of the committee. The committee reviews and evaluates available data on the safety and effectiveness of allergenic biological products intended for use in the diagnosis, prevention, or treatment of human diseases.

Agenda—Open public hearing. Interested persons requesting to present data, information, or views orally or in writing, on issues pending before the committee should communicate with the committee executive secretary.

Open committee discussion. Approximately one-half day will be devoted to each of the following topics: (1) Allergenic extracts of mites, *Dermatophagoides pteronyssinus* and *D. farinae,* to include an evaluation of data on appropriate source materials and reference preparations and (2) guidelines for the clinical testing of allergenic extracts for use in immunotherapy.

Closed committee discussion. The committee will receive FDA staff briefings on, and will discuss trade secret or confidential commercial information relevant to, pending biological product license applications for allergenic products such as modified allergenic extracts. This portion of the meeting will be closed to permit discussion of this information (5 U.S.C. 552(c)(4)).

Each public advisory committee meeting listed above may have as many as four separable portions: (1) An open public hearing, (2) an open committee discussion, (3) a closed presentation of data, and (4) a closed committee deliberation. Every advisory committee meeting shall have an open public hearing portion. Whether or not it also includes any of the other three portions will depend upon the specific meeting involved. The dates and times reserved for the separate portions of each committee meeting are listed above.

The open public hearing portion of each meeting shall be at least 1 hour long unless public participation does not last that long. It is emphasized, however, that the 1 hour time limit for an open public hearing represents a minimum rather than a maximum time for public participation, and an open public hearing may last for whatever longer period the committee chairperson determines will facilitate the committee's work.

Public hearings are subject to FDA's guideline (Subpart C of 21 CFR Part 10) concerning the policy and procedures for electronic media coverage of FDA's public administrative proceedings, including hearings before public advisory committees under 21 CFR Part 14. Under 21 CFR 10.205, representatives of the electronic media may be permitted, subject to certain limitations, to videotape, film, or otherwise record FDA's public administrative proceedings, including presentations by participants.

Meetings of advisory committees shall be conducted, insofar as is practical, in accordance with the agenda published in this **Federal Register** notice. Changes in the agenda will be announced at the beginning of the open portion of a meeting.

Any interested person who wishes to be assured of the right to make an oral presentation at the open public hearing portion of a meeting shall inform the contact person listed above, either orally or in writing, prior to the meeting. Any person attending the hearing who does not in advance of the meeting request an opportunity to speak will be allowed to make an oral presentation at

the hearing's conclusion, if time permits, at the chairperson's discretion.

Persons interested in specific agenda items to be discussed in open session may ascertain from the contact person the approximate time of discussion.

A list of committee members and summary minutes of meetings may be requested from the Docket Management Branch (HFA-305), Rm. 4-62, Food and Drug Administration, 5600 Fishers Lane Rockville, MD 20857, between 9 a.m. and 4 p.m., Monday through Friday.

The Commissioner, with the concurrence of the Chief Counsel, has determined for the reasons stated that those portions of the advisory committee meetings so designated in this notice shall be closed. The Federal Advisory Committee Act (FACA), as amended by the Government in the Sunshine Act (Pub. L. 94-409), permits such closed advisory committee meetings in certain circumstances. Those portions of a meeting designated as closed, however, shall be closed for the shortest possible time, consistent with the intent of the cited statutes.

The FACA, as amended, provides that a portion of a meeting may be closed where the matter for discussion involves a trade secret; commercial or financial information that is privileged or confidential; information of a personal nature, disclosure of which would be a clearly unwarranted invasion of personal privacy; investigatory files compiled for law enforcement purposes; information the premature disclosure of which would be likely to significantly frustrate implementation of a proposed agency action; and information in certain other instances not generally relevant to FDA matters.

Examples of portions of FDA advisory committee meetings that ordinarily may be closed, where necessary and in accordance with FACA criteria, include the review, discussion, and evaluation of drafts of regulations or guidelines or similar preexisting internal agency documents, but only if their premature disclosure is likely to significantly frustrate implementation of proposed agency action; review of trade secrets and confidential commercial or financial information submitted to the agency; consideration of matters involving investigatory files compiled for law enforcement purposes; and review of matters, such as personnel records or individual patient records, where disclosure would constitute a clearly unwarranted invasion of personal privacy.

Example of portions of FDA advisory committee meetings that ordinarily shall not be closed include the review, discussion, and evaluation of general preclinical and clinical test protocols and procedures for a class of drugs or devices; consideration of labeling requirements for a class of marketed drugs or devices; review of data and information on specific investigational or marketed drugs and devices that have previously been made public; presentation of any other data or information that is not exempt from public disclosure pursuant to the FACA, as amended; and, notably deliberative sessions to formulate advice and recommendations to the agency on matters that do not independently justify closing.

This notice is issued under section 10(a)(1) and (2) of the Federal Advisory Committee Act (Pub. L. 92-463, 86 Stat. 770-776 (5 U.S.C. App. I)), and FDA's regulations (21 CFR Part 14) on advisory committees.

Dated: May 15, 1986.

John A. Norris,

Acting Commissioner of Food and Drugs.

[FR Doc. 86-11372 Filed -5-20-86; 8:45 am]

BILLING CODE 4160-01-M

Office of Human Development Services

Statement of Organization, Functions, and Delegations of Authority

AGENCY: Administration on Aging, Office of Human Development Services, HHS.

ACTION: Notice of amendment to statement of organization, functions, and delegations of authority.

SUMMARY: This notice amends Part D of the statement of Organization, Functions, and Delegations of Authority of the Department of Health and Human Services, Office of Human Development Services (OHDS), Administration on Aging, to: (1) Combine the functions of the Office of Management and Policy Control (DGQ) (49 FR 17596) and the Office of Planning, Evaluation, and Dissemination (DGP) (49 FR 17596) into a new Office of Management and Policy (DGR); and to (2) revise DG.10. Organization (47 FR 54552) to update the organizational listing of the Administration on Aging.

EFFECTIVE DATE: May 21, 1986.

FOR FURTHER INFORMATION CONTACT: Donald Smith, Administration on Aging, Room 4737, HHS Building, 330 Independence Avenue, SW., Washington, DC 20201. Telephone 202-245-0351.

Amendment to Part D, Chapter DG, Administration on Aging (AOA), DG.10. Organization; and the Office of Management and Policy Control, and the Office of Planning, Evaluation, and Dissemination.

DG.10. Organization, as published in the **Federal Register** on December 3, 1982 (47 FR 54552); and the Office of Planning, Evaluation, and Dissemination (DGP), and the Office of Management and Policy Control (DGQ), as published in the **Federal Register** on April 24, 1984 (49 FR 17596), are deleted in their entirety and replaced by the following:

DG.10. Organization. The Administration on Aging is headed by the Commissioner on Aging and consists of:

- Office of the Commissioner (DGA)
- Office of Program Development (DGD)
  - Division of Research and Demonstratons (DGD1)
  - Division of Training and Development (DGD2)
- Office of State and Tribal Programs (DGN)
  - Division of Program Management and Regional Operations (DGN1)
  - Division of Operations and Fiscal Analysis (DGN2)
- Office of Management and Policy (DGR)
  - Division of Policy, Planning, and Administration (DGR1)
  - Division of Technical Information and Dissemination (DGR2)

Office of Management and Policy (DGR). Analyzes and interprets all issues related to AOA program policy; develops and interprets AOA goals, objectives, plans, legislation and regulations; performs statistical analyses related to the aging; plans and manages the AOA evaluation program; manages a program for the collection, analysis, and dissemination of information related to the aging. Prepares required reports to Congress; develops and justifies the budget; manages the Merit Pay and Employee Management Performance Systems; and executes a variety of administrative management tasks. Responds to inquiries from the public in the form of letters and telephone inquiries. Controls accounting and reprogramming of funds under the Older Americans Act. All functions are performed with appropriate subject matter input from the AOA program offices: Office of State and Tribal Programs, and Office of Program Development.

Division of Policy, Planning, and Administration (DGR1). Conducts policy studies on a wide range of issues affecting AOA programs and the elderly; solicits policy and strategy input from a wide spectrum of organizations concerned with the aging; develops and recommends priorities and strategies to

the Commissioner; develops and issues AOA goals and objectives; and coordinates the development of regulations.

Coordinates development of legislative proposals within AOA; develops testimony, background statements, and other policy documents for use by the Commissioner in legislative and other policy forums; in coordination with OHDS and OS legislative staff analyzes proposed and enacted legislation related directly or indirectly to the Older Americans Act; analyzes non-Federal legislative activity related to the elderly.

Prepares the AOA long and short range plans; provides interpretation and guidance for implementation of these plans to all AOA units; and reviews all AOA policy documents for consistency with agency policy.

Coordinates with the Office of the Commissioner, the AOA Office of Program Development, the HDS Office of Program Development, and other staff offices of HDS, and Departmental staff offices on policy, planning and legislative issues and development.

Translates the long and short range plans into procedural guidance for AOA components concerning performance appraisal planning, work planning, and budget preparation. By means of this system, coordinates the development of strategies for action and subsidiary plans as well as processes for monitoring and reporting on progress toward achieving stated objectives. Works with the HDS Office of Policy Development in the formulation, review and reporting of operational objectives.

Works with the Office of Management Services, OHDS, to prepare budget presentations for use at Departmental, Office of Management and Budget, and Congressional levels. Formulates the budget in accordance with Assistant Secretary (HDS) guidelines and instructions. Exercises funds control for all formula grants, discretionary grants and contracts, and salaries and expenses accounts. Processes AOA fiscal documents required to make and manage grants and contracts, and tracks financial status of all AOA programs and salaries and expenses funds. Based on formula grants management policies and procedures approved by the Assistant Secretary, HDS, controls administrative accounting and reprogramming of formula grant funds under the Older Americans Act. Is responsible for consultant services review (General Administration Manual, Chapter 8-15).

Develops AOA plans and priorities for evaluation of programs in consultation with appropriate units. Manages contracting for mandated evaluation projects and performs intramural evaluation studies. Prepares reports of the results of program and impact evaluations conducted by and for AOA, with technical input from other AOA divisions.

Coordinates the AOA Central Office Merit Pay and employee appraisal systems in accordance with Department policy, and assists the Commissioner and other AOA units in implementing these systems. Manages the AOA Central Office merit pay pool, and coordinates the granting of incentive awards.

Analyzes organization and functions in AOA and recommends changes for more effective mission accoplishment, develops staffing plans, and manges the Automated Office System for AOA. Develops space utilization and communication plans, supervises timekeeping and payroll functions and maintains general liaison with personnel, management analysis and administrative services offices at the OHDS level. Plans and manages the internal AOA staff development activity. Assures equal employment opportunity within the Central Office of AOA. Serves as a central contact for responding to requests for administrative services.

Maintains internal agency communications systems, including coordinating and controlling the issuance of AOA policy documents (Program Instructions, Assistance Memoranda, and Information Memoranda).

Is responsible for reviewing requests for information under the Freedom of Information Act and arranging for appropriate responses to the requests.

Division of Technical Information and Dissemination (DGR2). Is responsible for the AOA technical and substantive information systems; provides technical input to the AOA planning, policy development and budget cycles on technical information systems. Edits and produces the Aging Magazine aimed at professionals and constituents in the field of aging.

Reviews all products from AOA and the Older Americans Act network to identify new findings which will be useful to older people and professionals operating in the field of aging, concentrating particularly on research, demonstration and evaluation findings. Determines the relative utility of each product, its potential users, and the most effective way to disseminate information to users. Coordinates preparation of the annual AOA report to the President and Congress. Plans and manages special dissemination projects, e.g., Older Americans Month.

Advises the Central and Regional Offices of AOA, State and Area Agencies on Aging, and other agencies and organizations on their statistical data needs, uses of data, and methods of collecting the data; maintains a knowledge of data generated by a wide range of agencies and organizations; provides chairperson and secretariat services to the Task Force on Statistics; in support of planning and program requirements, performs routine and special analyses of data for AOA offices, other Federal and non-Federal organizations, and the general public.

Responds to written, phone and personal inquiries from all sources dealing with services and needs of the aging; when appropriate, coordinates the provision of technical and policy interpretations from responsible organizational units within and outside AOA. In emergency situations, refers individuals or families to the appropriate State and/or Area Agency on Aging for assistance in meeting the needs of the older person.

Dorcas R. Hardy,

Assistant Secretary for Human Development Services.

May 14, 1986.

[FR Doc. 86-11444 Filed 5-20-86; 8:45 am]

BILLING CODE 4130-01-M

DEPARTMENT OF HOUSING AND URBAN DEVELOPMENT

[Docket No. D-86-818; FR-2247]

Office of the Regional Administrator New York Regional Office; Designation of Order of Succession

AGENCY: Department of Housing and Urban Development.

ACTION: Designation of order of succession.

SUMMARY: The Regional Administrator is designating officials who may serve as Acting Regional Administrator/Regional Housing Commissioner during the absence, disability, or vacancy in the position of Regional Administrator/Regional Housing Commissioner.

EFFECTIVE DATE: This designation is effective April 22, 1986.

FOR FURTHER INFORMATION CONTACT: Adele S. Germain, Director, Administrative and Management Services Division, Office of Administration, New York Regional Office, Department of Housing and Urban Development, 26 Federal Plaza, New York, N.Y. 10278, telephone (212)

264–2761. (This is not a toll-free number.).

Designation

Each of the officials appointed to the following positions is designated to serve as Acting Regional Administrator/Regional Housing Commissioner during the absence, disability, or vacancy in the position of the Regional Administrator/Regional Housing Commissioner, with all the powers, functions, and duties redelegated or assigned to the Regional Administrator/Regional Housing Commissioner: Provided, that no official is authorized to serve as Acting Regional Administrator/Regional Housing Commissioner unless all preceding listed officials in this designation are unavailable to act by reason of absence, disability, or vacancy in the position:

1. Deputy Regional Administrator;
2. Director, Office of Public Housing;
3. Executive Assistant to the Regional Administrator;
4. Director, Office of Community Planning and Development;
5. Director, Office of Operational Support;
6. Regional Counsel;
7. Director, Office of Administration;
8. Director, Office of Fair Housing and Equal Opportunity.

This designation supersedes the designation effective October 31, 1984.

Authority: Delegation of Authority, 27 FR 4319 (1962); Sec. 7(d), Department of Housing and Urban Development Act, 42 U.S.C. 3535(d); and Interim Order 11, 31 FR 815 (1966).

Dated: April 22, 1986

Joseph D. Monticciolo,

Regional Administrator/Regional Housing Commissioner, Region II.

[FR Doc. 86–11399 Filed 5–20–86; 8:45 am]

BILLING CODE 4210–01–M

Office of Administration

[Docket No. N-86-1611]

Submission of Proposed Information Collections to OMB

AGENCY: Office of Administration, HUD.

ACTION: Notices.

SUMMARY: The proposed information collection requirements described below have been submitted to the Office of Management and Budget (OMB) for review, as required by the Paperwork Reduction Act. The Department is soliciting public comments on the subject proposals.

ACTION: Interested persons are invited to submit comments regarding these proposals. Comments should refer to the proposal by name and should be sent to: Robert Fishman, OMB Desk Officer, Office of Management and Budget, New Executive Office Building, Washington, DC 20503.

FOR FURTHER INFORMATION CONTACT: David S. Cristy, Reports Management Officer, Department of Housing and Urban Development, 451 7th Street SW., Washington, DC 20410, telephone (202) 755–6050. This is not a toll-free number.

SUPPLEMENTARY INFORMATION: The Department has submitted the proposals described below for the collection of information to OMB for review, as required by the Paperwork Reduction Act (44 U.S.C. Chapter 35).

The Notices list the following information: (1) The title of the information collection proposals; (2) the office of the agency to collect the information; (3) the agency form number, if applicable; (4) how frequently information submissions will be required; (5) what numbers of the public will be affected by the proposal; (6) an estimate of the total number of hours needed to prepare the information submission; (7) whether the proposal is new or an extension or reinstatement of an information collection requirement; and (8) the names and telephone numbers of an agency official familiar with the proposal and of the OMB Desk Officer for the Department.

Copies of the proposed forms and other available documents submitted to OMB may be obtained from David S. Cristy, Reports Management Officer for the Department. His address and telephone number are listed above. Comments regarding the proposals should be sent to the OMB Desk Officer at the address listed above.

The proposed information collection requirements are described as follows:

Proposal: Credit Reporting Form
Office: Administration
Form Number: None
Frequency of Submission: On Occasion
Affected Public: Individuals or Households and Businesses or Other For-Profit
Estimated Burden Hours: 10,800
Status: New
Contact: John T. Stahl, HUD, (202) 755–5163; Robert Fishman, OMB, (202) 395–6880.

Proposal: Request for Acceptance of Changes in Approved Drawings and Specifications
Office: Housing
Form Number: HUD–92577
Frequency of Submission: On Occasion
Affected Public: Businesses or Other For-Profit
Estimated Burden Hours: 5,000
Status: Extension
Contact: Kenneth L. Crandall, HUD, (202) 426–7212; Robert Fishman, OMB, (202) 395–6880.

Proposal: Previous Participation Certificate
Office: Housing
Form Number: HUD–2530 and USDA FmHA–1944–37
Frequency of Submission: On Occasion
Affected Public: Individuals or Households and Businesses or Other For-Profit
Estimated Burden Hours: 5,400
Status: Extension
Contact: Jon Will Pitts, HUD, (202) 755–6779; Robert Fishman, OMB, (202) 395–6880.

Proposal: Survey of Mortgage Lending Activity
Office: Housing
Form Number: HUD–136
Frequency of Submission: Monthly
Affected Public: Businesses or Other For-Profit
Estimated Burden Hours: 30,600
Status: Extension
Contact: John N. Dickie, HUD, (202) 755–7270; Robert Fishman, OMB, (202) 395–6880.

Authority: Sec. 3507 of the Paperwork Reduction Act, 44 U.S.C. 3507; Sec. 7(d) of the Department of Housing and Urban Development Act, 42 U.S.C. 3535(d).

Dated: May 13, 1986.

Donald J. Keuch, Jr.,

Deputy Assistant Secretary.

[FR Doc. 85–11400 Filed 5–20–85; 8:45 am]

BILLING CODE 4210–01–M

[Docket No. N-86-1610]

Submission of Proposed Information Collections to OMB

AGENCY: Office of Administration, HUD.

ACTION: Notices.

SUMMARY: The proposed information collection requirements described below have been submitted to the Office of Management and Budget (OMB) for review, as required by the Paperwork Reduction Act. The Department is soliciting public comments on the subject proposals.

ACTION: Interested persons are invited to submit comments regarding these proposals. Comments should refer to the proposal by name and should be sent to: Robert Fishman, OMB Desk Officer, Office of Management and Budget, New Executive Office Building, Washington, DC 20503.

FOR FURTHER INFORMATION CONTACT: David S. Cristy, Reports Management Officer, Department of Housing and Urban Development, 451 7th Street, Southwest, Washington, DC 20410, telephone (202) 755-6050. This is not a toll-free number.

SUPPLEMENTARY INFORMATION: The Department has submitted the proposals described below for the collection of information to OMB for review, as required by the Paperwork Reduction Act (44 U.S.C. Chapter 35).

The Notices list the following information: (1) The title of the information collection proposal; (2) the office of the agency to collect the information; (3) the agency form number, if applicable; (4) how frequently information submissions will be required; (5) what members of the public will be affected by the proposal; (6) an estimate of the total number of hours needed to prepare the information submission; (7) whether the proposal is new or an extension or reinstatement of an information collection requirement; and (8) the names and telephone numbers of an agency official familiar with the proposal and of the OMD Desk Officer for the Department.

Copies of the proposed forms and other available documents submitted to OMB may be obtained from David S. Cristy, Reports Management Officer for the Department. His address and telephone number are listed above. Comments regarding the proposals should be sent to the OMB Desk Officer at the address listed above.

The proposed information collection requirements are described as follows:

Proposal:
1. Schedule of Pooled Loans—Manufactured Home Loans
2. Issuer Certification of Pool Composition—Manufactured Home Loans

Office: Government National Mortgage Association
Form Number: HUD-11725 and 11739
Frequency of Submission: On Occasion
Affected Public: Businesses or Other For-Profit
Estimated Burden Hours: 900
Status: Extension
Contact: Patricia Gifford, HUD, (202) 755-5550, Robert Fishman, OMB, (202) 395-6880.

Proposal:
1. Schedule of Pooled Project Mortgage: and
2. Tandem Project Loan Pool Computation of GNMA Guaranty Fee

Office: Government National Mortgage Association
Form Number: HUD-11721 and 11745
Frequency of Submission: On Occasion
Affected Public: Businesses or Other For-Profit
Estimated Burden Hours: 55
Status: Extension
Contact: Patricia Gifford, HUD, (202) 755-5550, Robert Fishman, OMB, (202) 395-6880.

Proposal: Application for Insurance of Advance of Mortgage Proceeds
Office: Housing
Form Number: HUD-92403
Frequency of Submission: On Occasion
Affected Public: Businesses or Other For-Profit and Non-Profit Institutions
Estimated Burden Hours: 1,040
Status: Extension
Contact: Linda Cheatham, HUD, (202) 426-035, Robert Fishman, OMB, (202) 395-6880.

Proposal: State Agency Response to HUD Review Findings
Office: Housing
Form Number: None
Frequency of Submission: Biennially
Affected Public: State or Local Governments
Estimated Burden Hours: 100
Status: Extension
Contact: Conrad Egan, HUD, (202) 426-3968, Robert Fishman, OMB, (202) 395-6880.

Proposal: Annual Contributions for Operating Subsidies—Performance Funding System; Modification to the Performance Funding System
Office: Public and Indian Housing
Form Number: None
Frequency of Submission: Annually
Affected Public: State or Local Governments
Estimated Burden Hours: 30,400
Status: Extension
Contact: John Comerford, HUD, (202) 426-1872, Robert Fishman, OMB, (202) 395-6880.

Proposal: Change in Eligibility of Mortgages Involving a Dwelling Unit in a Cooperative Housing Development
Office: Housing
Form Number: None
Frequency of Submission: On Occasion
Affected Public: Individuals or Households and Businesses or Other For-Profit
Estimated Burden Hours: 1,500
Status: Revision
Contact: Joseph Emmi, HUD, (202) 426-0070, Robert Fishman, OMB, (202) 395-6880.

Proposal: Urban Homesteading Program
Office: Community Planning and Development
Form Number: HUD-4027.1 and 4027.2
Frequency of Submission: On Occasion and Monthly
Affected Public: State or Local Governments
Estimated Burden Hours: 2,400
Status: Revision
Contact: Richard R. Burk, HUD, (202) 755-5324, Robert Fishman, OMB, (202) 395-6880.

Authority: Sec. 3507 of the Paperwork Reduction Act, 44 U.S.C. 3507; Sec. 7(d) of the Department of Housing and Urban Development Act, 42, U.S.C. 3535(d).

Dated: April 25, 1986.

Dennis F. Geer,
Director, Office of Information Policies and Systems.

[FR Doc. 86-11401 Filed 5-20-86; 8:45 am]

BILLING CODE 4210-01-M

DEPARTMENT OF THE INTERIOR

Bureau of Land Management

[AA-6661-B]

Alaska Native Claims Selection: Eklutna, Inc.

In accordance with Departmental regulation 43 CFR 2650.7(d), notice is hereby given that a decision to issue conveyance under the provisions of Sec. 14(a) of the Alaska Native Claims Settlement Act of December 18, 1971 (ANCSA), 43 U.S.C. 1601, 1613, will be issued to Eklutna, Inc. for approximately 2,539 acres. The lands involved are located in T. 17 N., R. 3 E., Seward Meridian, Alaska, in the vicinity of Eklutna.

A notice of the decision will be published once a week for four (4) consecutive weeks, in the Anchorage Times. Copies of the decision may be obtained by contacting the Bureau of Land Management, Alaska State Office, 701 C Street, Box 13, Anchorage, Alaska 99513. ((907) 271-5960.)

Any party claiming a property interest which is adversely affected by the decision shall have until June 20, 1986, to file an appeal. However, parties receiving service by certified mail shall have 30 days from the date of receipt to file an appeal. Appeals must be filed in the Bureau of Land Management, Division of Conveyance Management (960), address identified above, where the requirements for filing an appeal can be obtained. Parties who do not file an appeal in accordance with the requirements of 43 CFR Part 4, Subpart E shall be deemed to have waived their rights.

David Wickstrom,
Realty Specialist, Alaska Programs Staff.

[FR Doc. 86-11427 Filed 5-20-86; 8:45 am]

BILLING CODE 4310-JA-M

[AA-14015]

Alaska Native Claims Selection; Sealaska Corp.

In accordance with Department regulation 43 CFR 2650.7(d), notice is hereby given that a decision to issue conveyance under the provisions of sec. 14(h)(8) of the Alaska Native Claims Settlement Act of December 18, 1971, 43 U.S.C. 1601, 1613(h)(8), will be issued to Sealaska Corporation for approximately 24,233 acres. The lands involved are within the Tongass National Forest.

Copper River Meridian, Alaska
T. °55 S., R. °73 E.
T. °56 S., R. °73 E.
T. °72 S., R. °81 E.
T. °73 S., R. °82 E.
T. °74 S., R. °85 E.

A notice of the decision will be published once a week for four (4) consecutive weeks, in the JUNEAU EMPIRE. Copies of the decision may be obtained by contacting the Bureau of Land Management, Alaska State Office, 701 C Street, Box 13, Anchorage, Alaska 99513. ((907) 271-5960).

Any party claiming a property interest which is adversely affected by the decision shall have until June 20, 1986, to file an appeal. However, parties receiving service by certified mail shall have 30 days from the date of receipt to file an appeal. Appeals must be filed in the Bureau of Land Management, Divisionof Conveyance Management (960), address identified above, where the requirements for filing an appeal can be obtained. Parties who do not file an appeal in accordance with the requirements of 43 CFR Part 4, Subpart E shall be deemed to have waived their rights.

Ann Adams,
Section Chief, Branch of ANCSA Adjudication.

[FR Doc. 86-11450 Filed 5-20-86; 8:45 am]
BILLING CODE 4310-JA-M

California Desert Plan: Availability

AGENCY: Bureau of Land Management, Interior.

ACTION: Notice of availability.

SUMMARY: Notice is hereby given that the pre-planning analysis for the 1986 Amendments to the California Desert Plan and the Eastern San Diego County Management Framework Plan is available for public review and comment.

Six proposed amendments have been accepted for consideration by the 1986 amendment review of these plans.

The proposed amendments address the following actions: 1) Changes in motorized vehicle access; 2) adjustment in the boundary of an Area of Critical Environmental Concern (ACEC); 3) reduction in burro population; 4) movement of a portion of a utility corridor, and 5) reclassification of a small area in the Eastern San Diego County Planning Unit. The pre-plan describes the following topics:

1. Purpose and need for action;
2. Geographic setting;
3. Scope and level of analysis planned;
4. Significant resource values and issues;
5. Alternatives;
6. EIS preparation schedule; and
7. Public participation schedule.

Comments are being accepted from the public until 30 days from the date of this Notice.

FOR FURTHER INFORMATION CONTACT: Gerald E. Hillier, District Manager, California Desert District, 1695 Spruce Street, Riverside, California 92507.

Dated: May 14, 1986.

H.W. Riecken,
Acting District Manager.

[FR Doc. 86-11378 Filed 5-20-86; 8:45 am]
BILLING CODE 4310-40-M

Intent to Prepare an Environmental Impact Statement (EIS) on a Coal-fired Steam/Electric Generating Plant; Thousand Springs Energy Park Project

May 15, 1986.

AGENCY: Bureau of Land Management, Interior.

ACTION: Intent to Prepare an Environmental Impact Statement (EIS) on a Coal-fired Steam/Electric Generating Plant in Northeastern Nevada and Notice of Scoping Meetings.

SUMMARY: Pursuant to section 102(2)(C) of the National Environmental Policy Act of 1969, the Bureau of Land Management, Elko District, will be directing the preparation of an Environmental Impact Statement (EIS) to be prepared by a third party contractor on the impacts of a proposed coal-fired steam/electric generating plant, the Thousand Springs Energy Park project, proposed on public and private lands in Elko County located in northeastern Nevada.

SUPPLEMENTARY INFORMATION: The Thousand Springs Energy Park (TSEP) project will be jointly owned by Sierra Pacific Resources (general partner) and a consortium of private interests (limited partners). It is anticipated that the energy output and capacity of the plant will serve California, Nevada, and other western states. Sierra Pacific Resources (SPR) will act as the Operating Manager for the proposed project.

The site selection study for the proposed plant was conducted in 1981. Several sites were identified in a Statewide survey as being environmentally and technically satisfactory for power plant development. Potential issues include air quality, social and economic impacts, ground and surface water quantity, waste disposal, wildlife and the land tenure adjustment.

The proposal includes construction of eight 250-megawatt generating units near Toano Draw in Thousand Springs Valley, Elko County, Nevada. Coal will be supplied from mines in Utah and Wyoming, and is proposed to be delivered to the plant site by rail via Cobre or Wells, Nevada. A total of six million tons per year are expected to be required at full capacity. The proposed plant site is located near the Southern Pacific Railroad. Studies are underway to determine the optimum rail spur location into the site.

The planned size and arrangement of the overall project takes into account the airshed capacity in the Toano Draw area. Meteorological and air quality monitoring has been conducted to document pre-project air quality which is considered good. Emissions control equipment will be employed to comply with Nevada State law and Environmental Projection Agency regulations. Ground level pollutant concentrations will not exceed levels permitted by National Ambient Air Quality Standards. The plant will require approximately 30,000 acre-feet of water annually. Water rights associated with SPR's land holdings in Thousand Spings Valley are expected to be sufficient to meet these requirements. Water is planned to be delivered from well fields to the plant using a system of pipelines.

Energy generated at the plant will be conveyed via new power transmission facilities. Transmission corridors and terminals for distributing power will not be finally determined until participating utilities have been identified. SPR plans to use designated and planned utility corridors as identified in Federal land use plans within Nevada to the maximum practical extent. Land use amendments may be necessary to accommodate some facilities.

Construction of the eight units will continue over approximately 20 years beginning in early 1989, with the first operating unit ready for commercial operation in 1993. Thereafter, successive units are planned to be ready for operation at two-year intervals. Estimates of the average and peak construction labor force, as well as the

plant operating force, are currently being developed. The proposed project will be constructed in a sparsely populated area and most of the project work force would be assembled from beyond reasonable commuting distances. Alternative project planning includes providing living accommodations for workers at the site, or in nearby communities.

Construction of the power plant is expected to require approximately 2,500 acres, of which the majority would be used for the coal stockpile and waste disposal ponds. Public lands (presently managed by the Bureau of Land Management) will be required for the TSEP project in addition to private land holdings. The public lands needed to acommodate the power plant proposal would be acquired by SPR through a land exchange with the Bureau of Land Management. The Toano Draw area, which has a checkerboard public/private land ownership pattern has been identified by SPR as best suited for the proposed project. In exchange for approximately 11,600 acres of public land in Toano Draw, the Bureau of Land Management would acquire approximately 11,500 acres of private land in the Snake Mountain Range west of Wells, Nevada. Those lands are considered to be high resource value lands that would provide important range, wildlife, watershed and recreation managment opportunities for the Bureau of Land Management and the public.

Alternatives to the proposed action that are being considered for analysis include: (1) No action, (2) Intermediate plant capacity, (3) Power generating and pollution control technologists, (4) Scheduling of units, (5) Power plant sites, (6) Transmission line routes, (7) Location of worker accommodations, (8) Fuel supply and transport, (9) Water supply, and (10) Plant equipment.

The tentative project schedule is as follows:

Begin Public Comment Period—April 1987.
File Final Environmental Impact Statement—August 1987.
Record of Decision—June 1988.
Complete Licensing and Permitting—July 1989.
Begin Construction of Unit 1—Early 1989.
Begin Commercial Operation of Unit 1—Early 1993.

The Bureau of Land Management's scoping process for the EIS will include: (1) Identification of issues to be addressed; (2) Identification of viable alternatives and (3) Notifying interested groups, individuals and agencies to that additional information concerning these issues can be obtained.

The scoping process will consist of a news release announcing the start of the EIS process; letters of invitation to participate in the scoping process; and a scoping document which further clarifies the proposed action, alternatives and significant issues being considered to be distributed to selected parties and available upon request.

DATES: Two public Scoping Meetings will be held as follows:

7:00 p.m., June 24, 1986, at the Wells High School Auditorium, 115 Lake Avenue, Wells, Nevada and
7:00 p.m., June 25, 1986, at the Elko Convention Center, 700 Festival Way, Elko, Nevada.

Formal briefings will be conducted on June 23, 1986 for State agencies and Congressional representatives. An open house will be held on June 23, 1986 from 6–8:30 p.m. to respond to questions regarding the proposed project at the Holiday Inn, 1000 E. Sixth Street, Reno, Nevada.

Additional briefing meetings will be considered upon request.

ADDRESS: Written comments will be accepted until July 11, 1986. Comments should be sent to the District Manager, Bureau of Land Management, ATTN: Thousand Springs Energy Park Project, P.O. Box 831, Elko, NV 89801.

FOR FURTHER INFORMATION CONTACT: Nancy Phelps, (702) 738–4071.

Edward F. Spang,
State Director, Nevada.

[FR Doc. 86–11379 Filed 5–20–86; 8:45 am]
BILLING CODE 4310-HC-M

[Alaska AA-48558-AC

Proposed Reinstatement of a Terminated Oil and Gas Lease: Alaska

In accordance with Title IV of the Federal Oil and Gas Royalty Management Act (Pub. L. 97–451), a petition for reinstatement of oil and gas lease AA–48558–AC has been received covering the following lands:

Copper River Meridian, Alaska

T. 7 S., R. 1 W.,
Sec. 23, S½SW¼
Sec. 24, N½NW¼.
(160 acres)

The proposed reinstatement of the lease would be under the same terms and conditions of the original lease, except the rental will be increased to $5 per acre per year, and royalty increased to 16 ⅔ percent. The $500 administrative fee and the cost of publishing this Notice have been paid. The required rentals and royalties accruing from June 1, 1985, the date of termination, have been paid.

Having met all the requirements for reinstatement of lease AA–48558–AC as set out in section 31 (d) and (e) of the Mineral Leasing Act of 1920 (30 U.S.C. 188), the Bureau of Land Management is proposing to reinstate the lease, effective June 1, 1985, subject to the terms and conditions cited above.

Dated: May 13, 1986.

Robert D. Merrill,
Acting Chief, Branch of Mineral Adjudication.

[FR Doc. 86–11452 Filed 5–20–86; 8:45 am]
BILLING CODE 4310-JA-M

[Alaska AA-48747-AC]

Proposed Reinstatement of a Terminated Oil and Gas Lease; Alaska

In accordance with Title IV of the Federal Oil and Gas Royalty Management Act (Pub. L. 97–451), a petition for reinstatement of oil and gas lease AA–48747–AC has been received covering the following lands:

Cooper River Meridian, Alaska

T. 7 S., R. 2 E.,
Sec. 5, NW¼SW¼.
40 acres.

The proposed reinstatement of the lease would be under the same terms and conditions of the original lease, except the rental will be increased to $5 per acre per year, and royalty increased to 16 ⅔ percent. The $500 administrative fee and the cost of publishing this Notice have been paid. The required rentals and royalties accruing from August 1, 1985, the date of termination, have been paid.

Having met all the requirements of reinstatement of lease AA–48747–AC as set out in section 31(d) and (e) of the Mineral Leasing Act of 1920 (30 U.S.C. 188), the Bureau of Land Management is proposing to reinstate the lease, effective August 1, 1985, subject to the terms and conditions cited above.

Dated: May 13, 1986.

Kay F. Kletka,
Acting Chief, Branch of Mineral Adjudication.

[FR Doc. 86–11451 Filed 5–20–86; 8:45 am]
BILLING CODE 4310-JA-M

Minerals Management Service

Development Operations Coordination Document

AGENCY: Minerals Management Service, Interior.

ACTION: Notice of the receipt of a Proposed Development Operations Coordination Document (DOCD).

SUMMARY: Notice is hereby given that Mobil Oil Exploration & Producing Southeast Inc. has submitted a DOCD describing the activities it proposes to conduct on Lease OCS–G 1627, Block 103, Main Pass Area, offshore Louisiana. Proposed plans for the above area provide for the development and production of hydrocarbons with support activities to be conducted from an onshore base located at Venice, Louisiana.

DATE: The subject DOCD was deemed submitted on May 9, 1986.

ADDRESS: A copy of the subject DOCD is available for public review at the Office of the Regional Director, Gulf of Mexico OCS Region, Minerals Management Service, 3301 North Causeway Blvd., Room 147, Metairie, Louisiana (Office Hours: 9 a.m. to 3:30 p.m., Monday through Friday).

FOR FURTHER INFORMATION CONTACT: Michael J. Tolbert; Minerals Management Service, Gulf of Mexico OCS Region, Rules and Production, Plans, Platform and Pipeline Section, Exploration/Development Plans Unit; Phone (504) 838–0875.

SUPPLEMENTARY INFORMATION: The purpose of this Notice is to inform the public, pursuant to Sec. 25 of the OCS Lands Act Amendments of 1978, that Minerals Management Service is considering approval of the DOCD and that it is available for public review.

Revised rules governing practices and procedures under which the Minerals Management Service makes information contained in DOCDs available to affected States, executives of affected States, local governments, and other interested parties became effective December 13, 1979, (44 FR 53685). Those practices and procedures are set out in revised § 250.34 of Title 30 of the CRF.

Dated: May 13, 1986.

J. Rogers Pearcy,

Regional Director, Gulf of Mexico OCS Region.

[FR Doc. 86–11454 Filed 5–20–86; 8:45 am]

BILLING CODE 4310-MR-M

Development Operations Coordination Document

AGENCY: Minerals Management Service, Interior.

ACTION: Notice of the Receipt of a Proposed Development Operations Coordination Document (DOCD).

SUMMARY: Notice is hereby given that Koch Exploration Company has submitted a DOCD describing the activities it proposes to conduct on Leases OCS–G 7338 and 6231, Blocks 496 and 497, respectively, High Island Area, offshore Louisiana. Proposed plans for the above area provide for the development and production of hydrocarbons with support activities to be conducted from an offshore base located at Cameron, Louisiana.

DATE: The subject DOCD was deemed submitted on May 12, 1986. Comments must be received within 15 days of the date of this Notice or 15 days after the Coastal Management Section receives a copy of the DOCD from the Minerals Management Service.

ADDRESSES: A copy of the subject DOCD is available for public review at the Office of the Regional Director, Gulf of Mexico OCS Region, Minerals Management Service, 3301 North Causeway Blvd., Room 147, Metairie, Louisiana (Office Hours: 9 a.m. to 3:30 p.m., Monday through Friday). A copy of the DOCD and the accompanying Consistency Certification are also available for public review at the Coastal Management Section Office located on the 10th Floor of the State Lands and Natural Resources Building, 625 North 4th Street, Baton Rouge, Louisiana (Office Hours: 8 a.m. to 4:30 p.m., Monday through Friday). The public may submit comments to the Coastal Management Section, Attention OCS Plans, Post Office Box 44396, Baton Rouge, Louisiana 70805.

FOR FURTHER INFORMATION CONTACT: Angie D. Gobert; Minerals Management Service, Gulf of Mexico OCS Region, Rules and Production, Plans, Platform and Pipeline Section; Exploration/Development Plans Unit, Phone (504) 838–0876.

SUPPLEMENTARY INFORMATION: The purpose of this Notice is to inform the public, pursuant to Sec. 25 of the OCS Lands Act Amendments of 1978, that the Minerals Management Service is considering approval of the DOCD and that it is available for public review. Additionally, this Notice is to inform the public, pursuant to § 930.61 of Title 15 of the CFR, that the Coastal Management Section/Louisiana Department of Natural Resources is reviewing the DOCD for consistency with the Louisiana Coastal Resources Program.

Revised rules governing practices and procedures under which the Minerals Management Service makes information contained in DOCDs available to affected States, executives of affected local governments, and other interested parties became effective December 13, 1979, (44 FR 53685).

Those practices and procedures are set out in revised Section 250.34 of Title 30 of the CFR.

Dated: May 13, 1986.

J. Rogers Pearcy,

Regional Director, Gulf of Mexico OCS Region.

[FR Doc. 86–11453 Filed 5–20–86; 8:45 am]

BILLING CODE 4310-MR-M

INTERNATIONAL TRADE COMMISSION

[Investigation No. 332-227]

Annual Reports on the Impact of the Caribbean Basin Economic Recovery Act on U.S. Industries and Consumers; Correction

AGENCY: U.S. International trade Commission.

ACTION: Correction of filing date.

SUMMARY: The written statements relating to reports to be prepared in the years 1987 through 1996 should be submitted no later than May 1 of the respective year.

Notice of the investigation was published in the **Federal Register** of May 14, 1986 (Vol. 51, page 17678).

Issued: May 14, 1986.

By order of the Commission.

Kenneth R. Mason,

Secretary.

[FR Doc. 86–11425 Filed 5–20–86; 8:45 am]

BILLING CODE 7020-02-M

[Investigations Nos. 731-TA-278, 279, and 280 (Final)]

Certain Cast-Iron Pipe Fittings From Brazil, Korea, and Taiwan

Determinations

On the basis of the record [1] developed in the subject investigations, the Commission determines,[2] pursuant to section 735(b) of the Tariff Act of 1930(19 U.S.C. 1673(b)), that an industry in the United States is materially injured [3] by reason of imports from

[1] The record is defined in § 207.2(i) of the Commission's Rules of Practice and Procedure (19 CFR 207.2(i)).

[2] Vice Chairman Liebeler dissenting.

[3] Commissioner Brunsdale deterines that an industry in the United States is threatened with material injury by reason of the subject imports. She also determines, pursuant to section 735(b)(4)(B) of the Act (19 U.S.C. 1673d(b)(4)(B)), that no material injury would have been found but for any suspension of liquidation of entries of the merchandise.

Brazil, Korea, and Taiwan of certain nonalloy, malleable cast-iron pipe fittings,[4] whether or not advanced in condition by operations or processes (such as threading) subsequent to the casting process, provided for in items 610.70 and 610.74 of the Tariff Schedules of the United States, which have been found by the Department of Commerce to be sold in the United States at less than fair value (LTFV).

Background

The Commission instituted these investigations effective January 13, 1986, following preliminary determinations by the Department of Commerce that imports of certain malleable cast-iron pipe fittings from Brazil, Korea, and Taiwan were being sold at LTFV within the meaning of section 731 of the Act (19 U.S.C. 1673). Notice of the institution of the Commission's investigations and of a public hearing to be held in connection therewith was given by posting copies of the notice in the Office of the Secretary, U.S. International Trade Commission, Washington, DC, and by publishing the notice in the **Federal Register** of February 6, 1986 (51 FR 4659). The hearing was held in Washington, DC, on April 14, 1986, and all persons who requested the opportunity were permitted to appear in person or by counsel.

The Commission transmitted its determinations in these investigations to the Secretary of Commerce on May 12, 1986. The views of the Commission are contained in USITC Publication 1845 (May 1986), entitled "Certain Cast-Iron Pipe Fittings from Brazil, The Republic of Korea, and Taiwan: Determinations of the Commission in Investigations Nos. 731-TA-278 through 280 (Final) Under the Tariff Act of 1930, Together With the Information Obtained in the Investigations."

Issued: May 13, 1986.

By order of the Commission:

Kenneth R. Mason,

Secretary.

[FR Doc. 86-11422 Filed 5-20-86; 8:45 am]

BILLING CODE 7020-02-M

[4] Such fittings are those with standard pressure ratings of 150 pounds per square inch (psi) and heavy-duty pressure ratings of 300 psi. Groove-lock fittings are not included.

[Investigation No. 731-TA-326 (Preliminary)]

Frozen Concentrated Orange Juice From Brazil; Import Investigation

AGENCY: International Trade Commission.

ACTION: Institution of preliminary antidumping investigation and scheduling of a conference to be held in connection with the investigation.

SUMMARY: The Commission hereby gives notice of the institution of preliminary antidumping investigation No. 731-TA-326 (Preliminary) under section 733(a) of the Tariff Act of 1930 (19 U.S.C. 1673b(a)) to determine whether there is a reasonable indication that an industry in the United States is materially injured, or is threatened with material injury, or the establishment of an industry in the United States is materially retarded, by reason of imports from Brazil of frozen concentrated orange juice, provided for in item 165.29 of the Tariff Schedules of the United States, which are alleged to be sold in the United States at less than fair value. As provided in section 733(a), the Commission must complete preliminary antidumping investigations in 45 days, or in this case by June 23, 1986.

For further information concerning the conduct of this investigation and rules of general application, consult the Commission's Rules of Practice and Procedure, Part 207, Subparts A and B (19 CFR Part 207), and Part 201, Subpart A through E (19 CFR Part 201).

EFFECTIVE DATES: May 9, 1986.

FOR FURTHER INFORMATION CONTACT: David Coombs (202-523-1376), Office of Investigations, U.S. International Trade Commission, 701 E Street NW., Washington, DC 20436. Hearing-impaired individuals are advised that information on this matter can be obtained by contacting the Commission's TDD terminal on 202-724-0002.

SUPPLEMENTARY INFORMATION:

Background

This investigation is being instituted in response to a petition filed on May 9, 1986 by Florida Citrus Mutual, Lakeland, Florida.

Participation in the investigation

Persons wishing to participate in this investigation as parties must file an entry of appearance with the Secretary to the Commission, as provided in § 201.11 of the Commission's rules (19 CFR 201.11), not later than seven (7) days after publication of this notice in the **Federal Register**. Any entry of appearance filed after this date will be referred to the Chairwoman, who will determine whether to accept the late entry for good cause shown by the person desiring to file the entry.

Service list

Pursuant to §201.11(d) of the Commission's rules (19 CFR 201.11(d)), the Secretary will prepare a service list containing the names and addresses of all persons, or their representatives, who are parties to this investigation upon the expiration of the period for filing entries of appearance. In accordance with §§ 201.16(c) and 207.3 of the rules (19 CFR 201.16(c) and 207.3), each document filed by a party to the investigation must be served on all other parties to the investigation (as indentified by the service list), and a certificate of service must accompany the document. The Secretary will not accept a document for filing without a certificate of service.

Conference

The Director of Operations of the Commission has scheduled a conference in connection with this investigation for 9:30 a.m. on June 2, 1986 at the U.S. International Trade Commission Building, 701 E Street NW., Washington, DC. Parties wishing to participate in the conference should contact David Coombs (202-523-1376) or Lynn Featherstone (202-523-0242) not later than May 29, 1986 to arrange for their appearance. Parties in support of the imposition of antidumping duties in this investigation and parties in opposition to the imposition of such duties will each be collectively allocated one hour within which to make an oral presentation at the conference.

Written submission

Any person may submit to the Commission on or before June 5, 1986 a written statement of information pertinent to the subject of the investigation, as provided in § 207.15 of the Commission's rules (19 CFR 207.15). A signed original and fourteen (14) copies of each submission must be filed with the Secretary to the Commission in accordance with § 201.8 of the rules (19 CFR 201.8). All written submissions except for confidential business data will be available for public inspection during regular business hours (8:45 a.m. to 5:15 p.m.) in the Office of the Secretary to the Commission.

Any business information for which confidential treatment is desired must be submitted separately. The envelope and all pages of such submissions must be clearly labeled "Confidential Business Information." Confidential submissions and requests for confidential treatment must conform with the requirements of § 201.6 of the Commission's rules (19 CFR 201.6).

Authority: This investigation is being conducted under authority of the Tariff Act of 1930, title VII. This notice is published pursuant to § 207.12 of the Commission's rules (19 CFR 207.12).

Issued: May 14, 1986.

By order of the Commission.

Kenneth R. Mason.

Secretary

[FR Doc. 86-11424 Filed 5-20-86; 8:45 am]

BILLING CODE 7020-02-M

[Investigation No. 337-TA-225]

Certain Multi-Level Touch Control Lighting Switches; Commission Determination To Review and Vacate Initial Determination Designating the Investigation More Complicated

AGENCY: International Trade Commission.

ACTION: Determination to review and vacate as moot an initial determination (ID) designating the investigation more complicated

SUMMARY: Notice is hereby given that the Commission has determined to review and vacate the administrative law judge's (ALJ) ID designating the above-captioned investigation more complicated and extending the deadline for completion of the investigation by two months.

FOR FURTHER INFORMATION CONTACT: John Kingery, Esq., Office of the General Counsel, U.S. International Trade Commission, telephone 202-523-1638.

SUPPLEMENTARY INFORMATION: On March 31, 1986, respondent Darjung Industrial Co., Ltd. (Darjung) filed a motion (Motion 225-37) for an extension of time, or in the alternative for an order designating the investigation more complicated. On April 11, 1986, the ALJ issued Order No. 30 granting Darjung's motion for extension of time. On the same day the ALJ issued an ID, Order No. 31, designating the investigation more complicated (and incorporating by reference Order No. 30). Petitions for review of the ID were received from complainant Southwest Laboratories, Inc., and the Commission investigative attorney.

On May 7, 1986, the ALJ issued Order No. 32 reopening the record to include Darjung's answer to the complaint and other documents. However, Darjung did not file a pre-hearing statement or exhibits by the April 30, 1986, deadline. The ALJ stated that no further evidence would be accepted from Darjung and, therefore, Orders Nos. 30 and 31 were no longer necessary.

The Commission has determined to review the ID (Order No. 31) and to vacate it as moot in light of Order No. 32. In making this determination, the Commission neither affirms nor reverse Order No. 31 and therefore does not adopt any of the language or rationale of Order No. 31.

Copies of the ALJ's ID and all other nonconfidential documents filed in connection with this investigation are available for inspection during official business hours (8:45 a.m. to 5:15 p.m.) in the Office of the Secretary, U.S. International Trade Commission, 701 E Street NW., Washington, DC 20436, telephone 202-523-0161.

Hearing-impaired individuals are advised that information on this matter can be obtained by contacting the Commission's TDD terminal on 202-724-0002.

Issued: May 13, 1986.

By order of the Commission.

Kenneth R. Mason,

Secretary.

[FR Doc. 86-11423 Filed 5-20-86; 8:45 am]

BILLING CODE 7020-02-M

[Investigation No. 337-TA-236]

Certain Portable Bag Sewing Machines and Parts Thereof; Commission Decision Extending the Time for Determining Whether To Review Initial Determination Granting Stipulated Motion for Partial Summary Judgment

AGENCY: International Trade Commission.

ACTION: Extension of time to decide whether to review initial determination granting complainant's stipulated motion for partial summary determination (Order No. 13).

SUMMARY: Notice is hereby given that the Commission has determined to extend the period of time in which it will decide whether to review the initial determination (ID) of the presiding administrative law judge (ALJ) granting the complainant's stipulated motion for partial summary determination. The extension of time will make the timeframe for determining whether to review Order No. 13 coextensive with another ID (Order No. 16) terminating the entire investigation.

FOR FURTHER INFORMATION CONTACT: Randi S. Field, Esq., Office of the General Counsel, U.S. International Trade Commission, telephone 202-523-0261.

SUPPLEMENTARY INFORMATION: On March 19, 1986, respondents American-Newlong, Inc., and Newlong Machine Works, Ltd., filed a motion (Motion No. 236-11) for leave to file admissions in lieu of discovery on the issue of economic injury. On March 24, 1986, complainant Axia, Incorporated, filed a stipulated motion (Motion No. 236-12) for summary determination that there is injury to the domestic industry. The complainant filed a supplement to its motion on April 2, 1986. On April 10, 1986, the presiding ALJ determined that there are no genuine issues of material fact that preclude summary determination on the issue of injury to the domestic industry, and he issued an initial determination granting the complainant's stipulated motion for summary determination. No petitions for review of the ID or Government agency or public comments have been received. On May 2, 1986, the ALJ issued Order No. 16 granting a joint motion to terminate the investigation in its entirety on the basis of a settlement agreement.

This action is taken under authority of section 337 of the Tariff Act of 1930 (19 U.S.C. 1337) and §§ 201.14(b) and 210.53 of the Commission's Rules of Practice and Procedure (19 CFR 201.14(b), 210.53).

Copies of the presiding ALJ's ID and all other nonconfidential documents filed in connection with this investigation are available for inspection during official business hours (8:45 a.m. to 5:15 p.m.) in the Office of the Secretary, U.S. International Trade Commission, 701 E Street NW., Washington, DC 20436, telephone 202-523-0161. Hearing-impaired individuals are advised that information on this matter can be obtained by contacting the Commission's TDD terminal on 202-724-0002.

Issued: May 12, 1986.

By order of the Commission.

Kenneth R. Mason,

Secretary.

[FR Doc. 86-11421 Filed 5-20-86; 8:45 am]

BILLING CODE 7020-02-M

[Investigation No. 337-TA-229]

Certain Nut Jewelry and Parts Thereof; Commission Decision to Review and Remand Initial Determination Terminating Investigation as to One Respondent on the Basis of a Consent Order

AGENCY: U.S. International Trade Commission.

ACTION: Review and remand of initial determination concerning termination of investigation as to one respondent on the basis of a consent order.

SUMMARY: Notice is hereby given that the U.S. International Trade Commission has determined to review and remand an initial determination (ID)

(Order No. 42) granting a joint motion to terminate the investigation as to respondent RDCO, Inc. (RDCO) on the basis of a consent order.

FOR FURTHER INFORMAITON CONTACT: Randi S. Field, Esq., Office of the General Counsel, U.S. International Trade Commission, telephone 202-523-0261.

SUPPLEMENTARY INFORMATION: On September 16, 1985, Kukui Nuts of Hawaii, Inc. (KNH) filed a section 337 complaint with the Commission alleging unfair methods of competition and unfair in the importation and sale of nut jewelry and parts thereof. On February 28, 1986, complainant KHN, respondent RDCO, and the Commission investigative attorney filed a joint motion to terminate the investigation as to respondent RDCO on the basis of a consent order. On April 22, 1986, the presiding adminstrative law judge (ALJ) issued an ID granting the motion and terminating this investigation as to respondent RDCO on the basis of the consent order. No petitions for review or comments from the public or Government agencies concerning the ID were received. Subsequently, however, the ALJ, by Orders Nos. 47-50, denied apparently identical motions with respect to other respondents in this investigation. In light of the denial of these other motions, the Commission determined to review the ID and to remand it for reconsideration by the ALJ. This remand does not constitute an instruction as to the outcome of such reconsideration.

This action is taken under the authority of section 337 of the Tariff Act of 1930 (19 U.S.C. 1337) and Commission rule 210.53 (19 CFR 210.53).

Copies of the ID and all other nonconfidential documents filed in connection with this investigation are available for inspection during official business hours (8:45 a.m. to 5:15 p.m.) in the Office of the Secretary, U.S. International Trade Commission, 701 E Street NW., Washington, DC 20437, telephone 202-523-0161. Hearing-impaired persons are advised that information on this matter can be obtained by contacting the Commission's TDD terminal on 202-724-0002.

Issued: May 15, 1986.

By order of the Commission.

Kenneth R. Mason,

Secretary.

[FR Doc. 86-11419 Filed 5-20-86; 8:45 am]

BILLING CODE 7020-02-M

[Investigation No. 337-TA-229]

Certain Nut Jewelry and Parts Thereof; Commission Decision To Review and Remand Initial Determination Terminating Investigation as to One Respondent on the Basis of a Consent Order

AGENCY: U.S. International Trade Commission.

ACTION: Review and remand of initial determination concerning termination of investigation as to one respondent on the basis of a consent order.

SUMMARY: Notice is hereby given that the U.S. International Trade Commission has determined to review and remand an initial determination (ID) (Order No. 35) granting a joint motion to terminate the investigation as to respondent Blair, Ltd. (Blair) on the basis of a consent order.

FOR FURTHER INFORMATION CONTACT: Randi S. Field, Esq., Office of the General Counsel, U.S. International Trade Commission, telephone 202-523-0261.

SUPPLEMENTARY INFORMATION: On September 16, 1985, Kukui Nuts of Hawaii, Inc. (KNH) filed a section 337 complaint with the Commission alleging unfair methods of competition and unfair acts in the importation and sale of nut jewerly and parts thereof. On February 18, 1986, complainant KHN, respondent Blair, and the Commission investigative attorney filed a joint motion to terminate the investigation as to respondent Blair on the basis of a consent order. On April 11, 1986, the presiding administrative law judge (ALJ) issued an ID (Order No. 35) granting the motion and terminating this investigation as to respondent Blair on the basis of the consent order. No petitions for review or comments from the public or Government agencies concerning the ID were received. Subsequently, however, the ALJ, by Orders Nos. 47-50, denied apparently identical motions with respect to other respondents in this investigation. In light of the denial of these other motions, the Commission determined to review the ID and to remand it for reconsideration by the ALJ. This remand does not constitute an instruction as to the outcome of such reconsideration.

This action is taken under the authority of section 337 of the Tariff Act of 1930 (19 U.S.C. 1337) and Commission rule 210.53 (19 CFR 210.53).

Copies of the ID and all other nonconfidential documents filed in connection with this investigation are available for inspection during official business hours (8:45 a.m. to 5:15 p.m.) in the Office of the Secretary, U.S. International Trade Commission, 701 E Street NW., Washington, DC 20436, telephone 202-523 061. Hearing-impaired persons are advised that information on this matter can be obtained by contacting the Commission's TDD terminal on 202-724-0002.

Issued: May 15, 1986.

By order of the Commission.

Kenneth R. Mason,

Secretary.

[FR Doc. 86-11420 Filed 5-20-86; 8:45 am]

BILLING CODE 7020-02-M

[Investigations Nos. 701-TA-248 (Final) and 731-TA-259-260 (Final)]

Offshore Platform Jackets and Piles From the Republic of Korea and Japan; Import Investigation

Determinations

On the basis of the record [1] developed in the subject investigation,[2] the Commission determines,[3] pursuant to section 705(b) of the Tariff Act of 1930 (19 U.S.C. 1671d(b)), that industries in the United States are materially injured by reason of imports from the Republic of Korea (Korea) of offshore platform jackets and piles,[4] provided for in item 652.97 of the Tariff Schedules of the United States, which have been found by the Department of Commerce to be subsidized by the Government of Korea.[5]

The Commission further determines, pursuant to section 735(b) of the Act (19 U.S.C. 1673d(b)), that industries in the United States are materially injured by reason of such imports from Korea [6] and

[1] The record is defined in sec. 207.2(i) of the Commission's Rules of Practice and Procedure (19 CFR 207.2(i)).

[2] Chairwoman Stern did not participate in these investigations in order to avoid any possibility or appearance of conflict of interest.

[3] In investigation No. 701-TA-248 (Final) Vice Chairman Liebeler finds that industries in the United States are not materially injured or threatened with material injury, and that the establishment of industries in the United States is not materially retarded, by reason of imports of subsidized offshore platform jackets and piles from Korea.

[4] These products are steel jackets (templates) and/or piles for offshore platforms, subassemblies thereof that do not require removal from a transportation vessel and further U.S. onshore assembly, and appurtenances attached to the jackets and piles. These products constitute the supporting structures which permanently affix offshore drilling and/or production platforms to the ocean floor. Appurtenances include grouting systems, boat landings, preinstalled conductor piples and similar attachments.

[5] Investigation No. 701-TA-248 (Final).

[6] Investigation No. 731-TA-259 (Final).

Japan,[7] which have been found by the Department of Commerce to be sold in the United States at less than fair value.[8]

Background

The Commission instituted investigation No. 701-TA-248 (Final) effective July 19, 1985, following a preliminary determination by the Department of Commerce that imports of offshore platform jackets and piles from Korea were being subsidized within the meaning of section 701 of the Act (19 U.S.C. 1671). The Commission instituted investigations Nos. 731-TA-259 and 260 (Final) effective November 25, 1985, following preliminary determinations by the Department of Commerce that such imports from Korea and Japan were being sold at less than fair value within the meaning of section 731 of the Act (19 U.S.C. 1673). Notice of the institution of these investigations and of a public hearing to be held in connection therewith was given by posting copies of the notices in the Office of the Secretary, U.S. International Trade Commission, Washington, DC, and by publishing the notices in the **Federal Register** of August 7, 1985 and December 12, 1985 (50 FR 31932, 50854). The hearing was held in Washington, DC, on April 2, 1986, and all persons who requested the opportunity were permitted to appear in person or by counsel.

The Commission transmitted its determinations in these investigations to the Secretary of Commerce on May 14, 1986. The views of the Commission are contained in USITC Publication 1848 (May 1986), entitled "Offshore Platform Jackets and Piles from the Republic of Korea and Japan: Determination of the Commission in Investigation No. 701-TA-248 (Final) and Determinations of the Commission in Investigations Nos. 731-TA-259 and 260 (Final) Under the Tariff Act of 1930, Together With the Information Obtained in the Investigations."

Issued: May 14, 1986.

By order of the Commission.

Kenneth R. Mason,

Secretary.

[FR Doc. 86-11426 Filed 5-20-86; 8:45 am]

BILLING CODE 7020-02-M

[7] Investigation No. 731-TA-260 (Final).

[8] In investigations Nos. 731-TA-259 and 260 (Final) Vice Chairman Liebeler finds that an industry in the United States is materially injured by reason of dumped imports of jackets from Korea and Japan, but that an industry in the United States is not materially injured or threatened with material injury, and that the establishment of an industry in the United States is not materially retarded, by reason of dumped imports of piles from Korea and Japan.

INTERSTATE COMMERCE COMMISSION

[Docket No. AB-18 (Sub 82X)]

The Chesapeake & Ohio Railway Co. Abandonment Exemption in Berrien County, MI

AGENCY: Interstate Commerce Commission.

ACTION: Notice of exemption.

SUMMARY: The Interstate Commerce Commission exempts from the requirements of prior approval under 49 U.S.C. 10903, *et seq.*, the abandonment by The Chesapeake and Ohio Railway Company of 2.46 miles of railroad in Berrien County, MI, subject to standard employee protective conditions.

DATES: This exemption will be effective on June 20, 1986. Petitions to stay must be filed by June 5, 1986, and petitions for reconsideration must be filed by June 16, 1986.

ADDRESSES: Send pleadings referring to Docket No. AB-18 (Sub-No. 82X) to:

(1) Office of the Secretary, Case Control Branch, Interstate Commerce Commission, Washington, DC 20423

(2) Petitioner's representative: Lawrence H. Richmond, 100 North Charles Street, Baltimore, MD 21201

FOR FURTHER INFORMATION CONTACT: Donald J. Shaw, Jr., (202) 275-7245.

SUPPLEMENTARY INFORMATION: Additional information is contained in the Commission's decision. To purchase a copy of the full decision, write to T.S. InfoSystems, Inc., Room 2229, Interstate Commerce Commission Building, Washington, DC 20423, or call 289-4357. (DC Metropolitan area) or toll-free (800) 424-5403.

Decided: May 13, 1986.

By the Commission, Chairman Gradison, Vice Chairman Simmons, Commissioners Sterrett, Andre, and Lamboley. Commissioner Lamboley commented with a separate expression.

James H. Bayne,

Secretary.

[FR Doc. 86-11381 Filed 5-20-86; 8:45 am]

BILLING CODE 7035-01-M

[Finance Docket No. 30826]

Port of Tillamook Bay Railroad; Trackage Rights Granted by Southern Pacific Transportation Company

Southern Pacific Transportation Company (SP) has agreed to grant local trackage rights to Port of Tillamook Bay Railroad over SP's line between Tillamook, OR (milepost 856.08) and Hillsboro, OR (milepost 765.50). The trackage rights are effective May 5, 1986.

This notice is filed under 49 CFR 1180.2(d)(7). Petitions to revoke the exemption under 49 U.S.C. 10505(d) may be filed at any time. The filing of a petition to revoke will not stay the transaction.

As a condition to use of this exemption, any employees affected by the trackage rights will be protected pursuant to *Norfolk and Western Ry. Co.—Trackage Rights—BN*, 354 I.C.C. 605 (1978), as modified in *Mendocino Coast Ry. Inc.—Lease and Operate*, 360 I.C.C. 653 (1980).

Dated: May 19, 1986.

By the Commission, Jane F. Mackall, Director, Office of Proceedings.

James H. Bayne,

Secretary.

[FR Doc. 86-11621 Filed 5-20-86; 8:45 am]

BILLING CODE 7035-01-M

DEPARTMENT OF JUSTICE

Drug Enforcement Administration

[Docket No. 85-48]

Mary B. Jones, M.D., Nicholas, GA; Hearing

Notice is hereby given that on September 4, 1985, the Drug Enforcement Administration, Department of Justice, issued to Mary B. Jones, M.D., an Order To Show Cause as to why the Drug Enforcement Administration should not revoke her DEA Certificate of Registration, AJ2362008, and deny her pending application for renewal of that registration, executed on December 1, 1984, for registration as a practitioner under 21 U.S.C. 823(f).

Thirty days having elapsed since the said Order To Show Cause was received by Respondent and written request for a hearing having been filed with the Drug Enforcement Administration, notice is hereby given that the hearing in this matter is being rescheduled and will commence at 10:00 a.m. on Wednesday, June 11, 1986, in Courtroom No. 10, Room 309, U.S. Claims Court, 717 Madison Place NW., Washington, DC.

Dated: May 14, 1986.

John C. Lawn,

Administrator, Drug Enforcement Administration.

[FR Doc. 86-11398 Filed 5-20-86; 8:45 am]

BILLING CODE 4410-09-M

DEPARTMENT OF LABOR

Occupational Safety and Health Administration

Supplement to California State Plan; Request for Public Comment

AGENCY: Occupational Safety and Health Administration, Labor.

ACTION: Request for comment: California State Standard.

SUMMARY: This notice invites comment on the California standard for Ethylene Oxide (EtO). This standard was submitted on May 23, 1985 in response to a Federal program change under 29 CFR 1953.21. California's standard for EtO is substantively different from the Federal Occupational Safety and Health Administration (OSHA) standard found at 29 CFR 1910.1047. Where a State standard adopted pursuant to an OSHA-approved State plan differs significantly from a comparable Federal standard, the Occupational Safety and Health Act of 1970 (29 U.S.C. 667) (the Act) requires that the State standard must be "at least as effective" as the Federal standard. In addition, if the standard is applicable to a product distributed or used in interstate commerce, it must be required by compelling local conditions and not pose any undue burden on interstate commerce. OSHA, therefore, seeks public comment on whether the California standard meets the above requirements.

DATES: Written comments should be submitted by June 20, 1986.

ADDRESSES: Written comments should be submitted in quadruplicate to the Director, Federal-State Operations, Occupational Safety and Health Administration, U.S. Department of Labor, Room N3476, 200 Constitution Avenue NW., Washington, DC 20210.

FOR FURTHER INFORMATION CONTACT: James Foster, Director, Office of Information and Consumer Affairs, Occupational Safety and Health Administration, Room N3637, 200 Constitution Avenue NW., Washington, DC 20210. Telephone: (202) 523-8148.

SUPPLEMENTARY INFORMATION:

A. Background

The requirements for adoption and enforcement of safety and health standards by a State with a State plan approved under section 18(b) of the Act are set forth in section 18(c)(2) of the Act and in 29 CFR Part 1902, 29 CFR 1952.7, and 29 CFR 1953.21, 1953.22, and 1953.23. OSHA regulations (29 CFR 1953.23(a)(1)) require that States respond to the adoption of new or revised permanent Federal standards by State promulgation of comparable standards within six months of OSHA publication in the **Federal Register**. A 30-day response time is required for State adoption of a standard comparable to a Federal emergency temporary standard (29 CFR 1953.22(a)(1)). Newly adopted State standards or revisions to standards must be submitted for OSHA review and approval under procedures set forth in 29 CFR Part 1953, but are enforceable by the State prior to Federal review and approval. Section 18(c)(2) of the Act provides that State standards must be at least as effective as their Federal counterparts, and that if State standards which are not identical to Federal standards are applicable to products which are distributed or used in interstate commerce, such standards must be required by compelling local conditions and must not unduly burden interstate commerce. (This latter requirement is commonly referred to as the "product clause.")

On May 1, 1973, notice was published in the **Federal Register** (38 FR 10717) of the approval of the California State plan and the adoption of Subpart K to Part 1952 containing the decision. The California State plan provides for the adoption of State standards in the following manner.

The Cal/OSHA Standards Board, comprised of 7 members representing management, labor, occupational safety, occupational health, and the general public, reviews new Federal standards, as well as proposed State-initiated standards presented by the California Division of Occupational Safety and Health, and those suggested by interested parties. The Standards Board appoints advisory committees with special expertise to develop a draft standard. Hearings are held to obtain input from the public. After a standard is adopted by the Standards Board, it is reviewed by the Office of Administrative Law and signed by the Secretary of State. The standard generally becomes effective 30 days after signing.

The Federal Ethylene Oxide standard was promulgated on June 22, 1984 (49 FR 25796). After public input, the California Standards Board adopted a standard for EtO on November 29, 1984. The standard became effective on January 18, 1985. By letter dated May 23, 1985, with attachments, from Dorothy Fowler, Assistant Program Manager, to Russell B. Swanson, Regional Administrator, the State submitted the standard (General Industry Safety Orders Section 5220) and incorporated the revision as part of its occupational safety and health plan.

B. Issues for Determination

The California standard in question is now review by the Assistant Secretary to determine whether it meets the requirements of section 18(c)(2) of the Act and 29 CFR Parts 1902 and 1953. Public comment is being sought by OSHA on the following issues.

(1) *"At least as effective" requirement.* OSHA has preliminarily determined that the California standard for EtO, although different, appears to be "at least as effective" as the comparable OSHA standard (29 CFR 1910.1047). Both the Federal and State standards set a permissible exposure limit of an 8-hour time-weighted average of 1 part per million. Both standards also set an action level, above which certain requirements for labeling and monitoring are in effect, of an 8-hour time-weighted average of .5 parts per million. The State standard, which applies to all industries, is broader in scope than the Federal standard, which does not apply to agriculture. However, it appears that there is minimal exposure to EtO in agricultural operations. The California standard also includes requirements not in the Federal standard concerning the reporting of the use of EtO and emergencies involving EtO. These reporting requirements are mandated by the State's Occupational Carcinogens Control Act of 1976. Finally, the State has made some editorial changes in the standard and has deleted parts of the Appendices to the Federal standard, which do not affect the requirements of the standard. Public comment on the effectiveness requirment is solicited for OSHA's consideration in its final decision on whether or not to approve the State's standards.

(2) *Product clause requirement.* OSHA is also seeking through this notice public comment on whether the California standard described above:

(a) Is applicable to products which are distributed or used in interstate commerce;

(b) Is required by compelling local conditions; and

(c) Unduly burdens interstate commerce.

C. Public Participation

Interested persons are invited to submit written data, views and arguments with respect to the issues described above. These comments must be postmarked on or before June 25, 1986, and submitted in quadruplicate to the Director, Federal-State Operations, Occupational Safety and Health Administration, U.S. Department of

Labor, Room N3476, 200 Constitution Avenue, NW., Washington, DC 20210. Written submissions must clearly identify the issues which are addressed and the position taken with respect to each issue. The Occupational Safety and Health Administration will consider all relevant comments, arguments and requests submitted concerning the supplement and will thereafter publish notice of the decision approving or disapproving it.

D. Location of Supplement for Inspection and Copying

A copy of the California standard on EtO, along with approved State provisions for adoption of standards, may be inspected and copied during normal business hours at the following locations: Office of the Regional Administrator, U.S. Department of Labor, 11349 Federal Building, 450 Golden Gate Avenue, P.O. Box 36017, San Francisco, California 94102; California Occupational Safety and Health Administration, Room 701, 525 Golden Gate Avenue, San Francisco, California 94102; and Director, Federal-State Operations, Occupational Safety and Health Administration, U.S. Department of Labor, Room N3476, 200 Constitution Avenue NW., Washington, DC 20210.

Authority: Sec. 18, 84 Stat. 1608 (29 U.S.C. 667); 29 CFR Part 1902, Secretary of Labor's Order No. 9-83 (43 FR 35736).

Signed this 14th day of May, 1986, in Washington, DC.

Patrick R. Tyson,

Assistant Secretary of Labor.

[FR Doc. 86-11234 Filed 5-20-86; 8:45 am]

BILLING CODE 4510-26-M

Pension and Welfare Benefits Administration

Advisory Council on Employee Welfare and Pension Benefit Plans; Meeting

Pursuant to section 512 of the Employee Retirement Income Security Act of 1974 (ERISA) 29 U.S.C. 1142, public meetings of the Advisory Council on Employee Welfare and Pension Benefit Plans will be held at 9:30 a.m., on Monday and Tuesday, June 2 & 3, 1986, in Conference Room N-3437D, U.S. Department of Labor, 200 Constitution Avenue NW., Washington, DC.

The purpose of the meetings is to present, discuss and invite public comments on items on the Agenda as summarized below:

June 2, 1986 (Presentation, Public Comments)

1. Termination Task Force Report (Pension Plan Terminations with Asset Reversions)
2. Hay-Huggins Report (Pension Plan Terminations with Asset Reversions)
3. Public Comments

June 3, 1986 (Deliberations)

Termination Task Force Report (Pension Plan Terminations with Asset Reversions)

Individuals or representatives of organizations wishing to address the Advisory Council should submit requests on or before May 27, 1986 to William E. Morrow, ERISA Advisory Council, U.S. Department of Labor, Room N-5677, 200 Constitution Avenue NW., Washington, DC. 20210, telephone (202) 523-8753. Oral presentations will be limited to ten minutes, however, written statements pertaining to items on the Agenda or any other aspects of ERISA may be submitted for the record.

Individuals or representatives of organizations not wishing to make an oral presentation but desiring to submit written statements pertaining to items on the Agenda or any other aspect of ERISA, should send 20 copies to William E. Morrow at the above address. Papers will be accepted and included in the record of the meeting if received on or before May 27, 1986.

Signed at Washington, DC, this 15th day of May, 1986.

Dennis M. Kass,

Assistant Secretary, Pension and Welfare Benefits Administration.

[FR Doc. 86-11363 Filed 5-20-86; 8:45 am]

BILLING CODE 4510-29-M

NUCLEAR REGULATORY COMMISSION

Applications and Amendments to Operating Licenses Involving No Significant Hazards Considerations; Bi-Weekly Notice

I. Background

Pursuant to Pub. L. (Pub. L.) 97-415, the Nuclear Regulatory Commission (the Commission) is publishing this regular bi-weekly notice. Pub. L. 97-415 revised section 189 of the Atomic Energy Act of 1954, as amended (the Act), to require the Commission to publish notice of any amendments issued, or proposed to be issued, under a new provision of section 189 of the Act. This provision grants the Commission the authority to issue and make immediately effective any amendment to an operating license upon a determination by the Commission that such amendment involves no significant hazards consideration, notwithstanding the pendency before the Commission of a request for a hearing from any person.

This bi-weekly notice includes all amendments issued, or proposed to be issued, since the date of publication of the last bi-weekly notice which was published on May 7, 1986 (51 FR 16919) through May 12, 1986.

NOTICE OF CONSIDERATION OF ISSUANCE OF AMENDMENT TO FACILITY OPERATING LICENSE AND PROPOSED NO SIGNIFICANT HAZARDS CONSIDERATION DETERMINATION AND OPPORTUNITY FOR HEARING

The Commission has made a proposed determination that the following amendment requests involve no significant hazards consideration. Under the Commission's regulations in 10 CFR 50.92, this means that operation of the facility in accordance with the proposed amendments would not (1) involve a significant increase in the probability or consequences of an accident previously evaluated; or (2) create the possibility of a new or different kind of accident from any accident previously evaluated; or (3) involve a significant reduction in a margin of safety. The basis for this proposed determination for each amendment request is shown below.

The Commission is seeking public comments on this proposed determination. Any comments received within 30 days after the date of publication of this notice will be considered in making any final determination. The Commission will not normally make a final determination unless it receives a request for a hearing.

Written comments may be submitted to the Rules and Procedures Branch, Division of Rules and Records, Office of Administration, U.S. Nuclear Regulatory Commission, Washington, DC 20555. Copies of comments received may be examined at the NRC Public Docket Room, 1717 H Street, N.W., Washington, DC.

By June 20, 1986, the licensee may file a request for a hearing with respect to issuance of the amendment to the subject facility operating license and any person whose interest may be affected by this proceeding and who wishes to participate as a party in the proceeding must file a written petition for leave to intervene. Requests for a hearing and petitions for leave to intervene shall be filed in accordance with the Commission's "Rules of Practice for Domestic Licensing

Proceedings" in 10 CFR Part 2. If a request for a hearing or petition for leave to intervene is filed by the above date, the Commission or an Atomic Safety and Licensing Board, designated by the Commission or by the Chairman of the Atomic Safety and Licensing Board Panel, will rule on the request and/or petition and the Secretary or the designated Atomic Safety and Licensing Board will issue a notice of hearing or an appropriate order.

As required by 10 CFR 2.714, a petition for leave to intervene shall set forth with particularity the interest of the petitioner in the proceeding, and how that interest may be affected by the results of the proceeding. The petition should specifically explain the reasons why intervention should be permitted with particular reference to the following factors: (1) The nature of the petitioner's right under the Act to be made a party to the proceeding; (2) the nature and extent of the petitioner's property, financial, or other interest in the proceeding; and (3) the possible effect of any order which may be entered in the proceeding on the petitioner's interest. The petition should also identify the specific aspect(s) of the subject matter of the proceeding as to which petitioner wishes to intervene. Any person who has filed a petition for leave to intervene or who has been admitted as a party may amend the petition without requesting leave of the Board up to fifteen (15) days prior to the first prehearing conference scheduled in the proceeding, but such an amended petition must satisfy the specificity requirements described above.

Not later than fifteen (15) days prior to the first prehearing conference scheduled in the proceeding, a petitioner shall file a supplement to the petition to intervene which must include a list of the contentions which are sought to be litigated in the matter, and the bases for each contention set forth with reasonable specificity. Contentions shall be limited to matters within the scope of the amendment under consideration. A petitioner who fails to file such a supplement which satisfies these requirements with respect to at least one contention will not be permitted to participate as a party.

Those permitted to intervene become parties to the proceeding, subject to any limitations in the order granting leave to intervene, and have the opportunity to participate fully in the conduct of the hearing, including the opportunity to present evidence and cross-examine witnesses.

If a hearing is requested, the Commission will make a final determination on the issue of no significant hazards consideration. The final determination will serve to decide when the hearing is held.

If the final determination is that the amendment request involves no significant hazards consideration, the Commission may issue the amendment and make it immediately effective, notwithstanding the request for a hearing. Any hearing held would take place after issuance of the amendment.

If the final determination is that the amendment involves a significant hazards consideration, any hearing held would take place before the issuance of any amendment.

Normally, the Commission will not issue the amendment until the expiration of the 30-day notice period. However, should circumstances change during the notice period such that failure to act in a timely way would result, for example, in derating or shutdown of the facility, the Commission may issue the license amendment before the expiration of the 30-day notice period, provided that its final determination is that the amendment involves no significant hazards consideration. The final determination will consider all public and State comments received before action is taken. Should the Commission take this action, it will publish a notice of issuance and provide for opportunity for a hearing after issuance. The Commission expects that the need to take this action will occur very infrequently.

A request for a hearing or a petition for leave to intervene must be filed with the Secretary of the Commission, U.S. Nuclear Regulatory Commission, Washington, D.C. 20555, Attention: Docketing and Service Branch, or may be delivered to the Commission's Public Document Room, 1717 H Street, NW., Washington, D.C., by the above date. Where petitions are filed during the last ten (10) days of the notice period, it is requested that the petitioner promptly so inform the Commission by a toll-free telephone call to Western Union at (800) 325-6000 (in Missouri (800) 342-6700). The Western Union operator should be given Datagram Identification Number 3737 and the following message addressed to *(Project Director)* petitioner's name and telephone number; date petition was mailed; plant name; and pulication date and page number of this **Federal Register** notice. A copy of the petition should also be sent to the Executive Legal Director, U.S. Nuclear Regulatory Commission, Washington, D.C. 20555, and to the attorney for the licensee.

Nontimely filings of petitions for leave to intervene, amended petitions, supplemental petitions and/or requests for hearing will not be entertained absent a determination by the Commission, the presiding officer or the presiding Atomic Safety and Licensing Board, that the petition and/or request should be granted based upn a balancing of factors specified in 10 CFR 2.714(a)(1)(i)-(v) and 2.714(d).

For further details with respect to this action, see the application for amendment which is available for public inspection at the Commission's Public Document Room, 1717 H Street, NW., Washington, D.C., and at the local public document room for the particular facility involved.

Carolina Power & Light Company, Docket Nos. 50-325 and 50-324, Brunswick Steam Electric Plant, Units 1 and 2, Brunswick County, North Carolina

Date of amendment request: March 5, 1986.

Description of amendment request: The proposed amendment would revise the Technical Specifications (TS) for Brunswick Steam Electric Plant, Units 1 and 2 by modifying the schedule in Table 4.4.6.1.3-1 for the withdrawal of reactor vessel material specimens from the reactor vessel for fracture toughness surveillance. In addition, a requirement would be added to TS Section 4.4.6.1.3 to determine the cumulative effective full power years at least once every 18 months to support the reactor vessel material surveillance schedule.

The purpose of the material surveillance program required by 10 CFR 50, Appendix H is to monitor changes in the fracture toughness properties of ferritic materials in the reactor vessel beltline region of light-water nuclear power reactors resulting from exposure of these materials to neutron irradiation and the thermal environment. Under this program, fracture toughness test data is obtained from material specimens exposed in surveillance capsules, which are withdrawn periodically from the reactor vessel. This data is to be used as described in 10 CFR 50, Appendix G, Sections IV and V.

At the time Brunswick Units 1 and 2 were constructed, only three surveillance capsules were required by the regulations and the transtition temperature shift was estimated to be less than 100 °F. Current radiation damage trend curves and vessel fluence projections indicate a greater than 100

°F transition temperature shift by the expiration of the operating license; therefore, an effort has been made to maximize information obtainable from the three capsules by revising the current specimen withdrawal schedule.

Currently, TS Table 4.4.6.1.3-1 for both Unit 1 and Unit 2 requires removal of one capsule at the end of 10 years and another at the end of 20 years. The third capsule is kept in reserve. The proposed modification to this table for Unit 1 would require removal of Capsule No. 3 at the end of 8 effective full power years (EFPY) and Capsule No. 2 at the end of 13 EFPY. For Unit 2, removal of Capsule No. 3 would be after 10 EFPY and Capsule No. 2 after 15 EFPY. For both Units, Capsule No. 1 would be kept in reserve.

Basis for proposed no significant hazards consideration determination: The Carolina Power & Light Company (CP&L) has reviewed the proposed change to TS Table 4.4.6.1.3-1 and has determined that the requested amendment:

(1) Does not involve a significant increase in the probability or consequences of an accident previously evaluated because the proposed changes to TS Table 4.4.6.1.3-1 incorporates the latest NRC guidelines relative to irradiation surveillance testing. These changes are being requested to make the license conform to changes in regulations. These changes do not affect previously analyzed events or any parameters associated with plant operation. Therefore, it is concluded that the changes proposed in this request will not increase the probability of occurrence of any accident previously evaluated.

(2) Does not create the possibility of a new or different kind of accident than previously evaluated because the proposed changes to TS Table 4.4.6.1.3-1 do not adversely affect the operability of safety-related equipment. It is concluded that the probability or consequences of equipment important to safety malfunctioning will not be increased. Therefore, the proposed changes do not create the possibility of a new or different kind of accident than already evaluated.

(3) Does not involve a significant reduction in a margin a safety because predictions of neutron radiation effects on pressure vessel steel were considered in the design of Brunswick's nuclear power reactors. This proposed surveillance capsule withdrawal schedule permits more accurate monitoring of long-term effects. Testing of the surveillance capsules will permit verification of the adequacy and conservatism of Brunswick's reactor vessel pressure/temperature operational limits. The proposed surveillance capsule withdrawal schedule does not affect plant operation. It is intended to verify initial predictions of the surveillance material response to the actual radiation environment. Therefore, there is no significant reduction in a margin of safety as a result of this revision.

For the reasons stated above, CP&L has determined that the proposed amendment to TS Table 4.4.6.1.3-1 does not involve a significant hazards consideration.

The staff has reviewed the CP&L determination and finds that the proposed change to Table 4.4.6.1.3-1 meets the standards for determining whether a significant hazards condition exists (10 CFR 50.92(c)), that is, the proposed amendment to an operating license for a facility involves no significant hazards consideration if operation of the facility in accordance with the proposed amendment would not: (1) Involve a significant increase in the probability or consequences of an accident previously evaluated; (2) create the possibility of a new or different kind of accident from any accident previously evaluated; or (3) involve a significant reduction in a margin of safety.

The Commission has provided examples (48 FR 14870, April 6, 1983) of actions not likely to involve a significant hazards consideration. Example (ii) of this guidance states that a change that constitutes an additional limitation, restriction or control not presently included in the technical specifications would not likely constitute a significant hazard. The staff has reviewed the proposed change to TS Section 4.4.6.1.3 which adds the requirement to determine EFPY at least every 18 months, and has concluded that it falls within the envelope of Example (ii) since it adds a new surveillance requirement.

Based on the above discussion, the staff therefore proposes to determine that the proposed changes do not involve a significant hazards consideration.

Local Public Document Room location: Southport, Brunswick County Library, 109 W. Moore Street, Southport, North Carolina 28461.

Attorney for licensee: Thomas A. Baxter, Esquire, Shaw, Pittman, Potts and Trowbridge, 1800 M Street, N.W., Washington, D.C. 20036.

NRC Project Director: Daniel R. Muller.

Carolina Power & Light Company, Docket Nos. 50-325 and 50-324, Brunswick Steam Electric Plant, Units 1 and 2, Brunswick County, North Carolina

Date of application for amendment: March 5, 1986, as supplemented by submittal dated March 28, 1986.

Description of amendment request: The proposed amendment would change the Technical Specifications (TS) for Brunswick Steam Electric Plant, Units 1 and 2. Changes are proposed to TS Section 3/4.3.5.5 to reflect modifications made to the chlorine detection system that provide for control room alarm and isolation in the event of high chlorine concentration either at the control room air intake or at the chlorine tank car siding. In addition, changes to the action statements regarding inoperable chlorine detectors have been revised to more adequately reflect the chlorine detection system design.

The system description and surveillance requirements of TS Sections 3/4.3.5.5 are expanded to reflect the current chlorine detection system which has two independent subsystems, each containing two redundant detectors. These detectors for the subsystems are located at the control room air intake and at the chlorine tank car siding. The frequency and type of surveillance would not be changed by the proposed amendment. The action statement for inoperable equipment in the chlorine detection system is, however, changed to reflect the increased system capability. The current action statement of TS Section 3.3.5.5a requires an inoperable chlorine detection system to be restored to OPERABLE status within eight hours or the plant shutdown if operability cannot be achieved. This action statement reflects a system design using only two chlorine detectors, both in the control room air intake. The proposed action statement would allow one chlorine detector of either or both subsystems to be inoperable for seven days, or both detectors of either subsystem to be inoperable for one hour before the control room must be isolated and operated in the recirculation mode.

Basis for proposed no significant hazards consideration determination: The Carolina Power & Light Company (CP&L) has reviewed this request and determined that: The proposed amendment does not involve a significant increase in the probability or consequences of an accident previously evaluated nor does it create the possibility of a new or different kind of accident than previously evaluated

because the modifications made to the chlorine detection system do not result in changes to the assumptions or results of any accident analyses previously performed. In fact, the safety evaluation in the Brunswick FSAR assumes failure of both chlorine detectors located near the tank car siding. The configuration of the chlorine detection system is consistent with descriptions provided in the Brunswick Control Room Habitability Study. The NRC issued a Safety Evaluation Report finding this design acceptable on October 18, 1983.

The revision to Action Statement 3.3.5.5.a, allowing operation for up to seven days with one chlorine detector of either or both subsystems inoperable, does not involve a significant increase in the probability or consequences of an accident previously evaluated nor does it create the possibility of a new or different kind of accident than previously evaluated because chlorine detection system redundancy will ensure control room isolation in the event of a chlorine leak. The chlorine detection system is designed so that failure of a single detector in either subsystem does not render that subsystem inoperable. The chlorine detection system redundancy is ensured by the proposed revision to Specification 3/4.3.5.5 through the requirement for four operable chlorine detectors, two per subsystem. This is more restrictive than the current specification which requires only two operable chlorine detectors and, thereby, offsets the seven day out-of-service allowance for a signal chlorine detector of either or both subsystems. Action Statement 3.3.5.5.b has been added to ensure that the control room is isolated within one hour should both detectors of a subsystem become inoperable. This is more conservative than the current Brunswick technical specification which allows operation for up to eight hours with an inoperable chlorine detection system prior to initiating shutdown of the plant. Requiring isolation of the control room rather than plant shutdown provides protection for the operators without placing the plant in an unnecessary operating transient.

The proposed amendment does not involve a significant reduction in a margin of safety because the modifications made to the plant provide for better chlorine detection capabilities. The clarification of the system design in the revised TS will help to avoid possible operator confusion. Operation with the control room isolated rather than shutting down the plant when the chlorine detection system is inoperable provides adequate operator protection in the unlikely event of a chlorine leak without placing the plant in an unnecessary operating transient. Allowing for operation for seven days with one detector in either or both chlorine detection system subsystems inoperable does not decrease the margin of safety because the system redundancey ensures control room isolation if required.

Based on the above reasoning, CP&L has determined that the proposed amendment does not involve a significant hazards consideration.

The staff has reviewed the CP&L determination and finds that the amendment request meets the standards for determining whether a significant hazards condition exists (10 CFR 50.92(c)), that is, the proposed amendment to an operating license for a facility involves no significant hazards consideration if operation of the facility in accordance with the proposed amendment would not: (1) Involve a significant increase in the probability or consequences of an accident previously evaluated; (2) create the possibility of a new or different kind of accident from any accident previously evaluated; or (3) involve a significant reduction in a margin safety.

Based on the above discussion the Commission proposed to determine that the amendment does not involve a significant hazards consideration.

Local Public Document Room location: Southport, Brunswick County Library, 109 W. Moore Street, Southport, North Carolina 28461.

Attorney for licensee: Thomas A. Baxter, Esquire, Shaw, Pittman, Potts and Trowbridge, 1800 M Street, N.W., Washington, D.C. 20036.

NRC Project Director: Daniel R. Muller.

Carolina Power & Light Company, Docket Nos. 50-325 and 50-324, Brunswick Steam Electric Plant, Units 1 and 2, Brunswick County, North Carolina

Date of amendment request: March 17, 1986.

Description of amendment request: The proposed amendment would change the Technical Specifications (TS) for Brunswick Steam Electric Plant, Units 1 and 2. Changes are proposed to TS Sections 4.4.3.1.b and 4.4.3.2.a to delete from the surveillance requirements reactor coolant system leakage detection instrument tag numbers that are not part of the equipment required for monitoring reactor coolant system leakage.

The requested TS changes delete Tag Numbers G16-FY-K600 and G16-FY-K602 from the instrumentation tag numbers associated with (1) the primary containment sump flow integrating system referenced in TS 4.4.3.1.b and (2) the drywell and equipment drain sump flow system referenced in TS 4.4.3.2.a. Tag Number G16-FY-K600 and G16-FY-K602 specify square root converters that only provide an input to a flow recorder. These square root converters do not provide an input to the sump monitoring systems encompassed by the TS referred to above. The flow recorder is not used to satisfy the TS requirements for containment sump flow monitoring (i.e., reactor coolant system leakage detection), therefore, the flow recorder is not listed in the TS. Since the square root converters are not associated with indicators or recorders required by the TS, the licensee proposes to delete from the TS the tag numbers associated with these components.

Basis for proposed no significant hazards consideration determination: The Carolina Power & Light Company (CP&L) has reviewed the request and determined that the proposed changes do not:

1. Involve a significant increase in the probability or consequences of an accident previously evaluated because the deletion of the tag numbers for the square root converters does not affect the operability of containment sump monitoring equipment required by the TS. These square root converters only provide an input to recorders which are not required by the TS.

2. Create the possibility of a new or different kind of accident than previously evaluated because the proposed changes will not modify or alter an existing plant system. The proposed changes simply delete references to tag numbers for components that are not associated with recorders or indicators required by the TS.

3. Involve a significant reduction in the margin of safety because the proposed changes do not affect the operability or setpoints of existing equipment required by the TS nor the capability to monitor containment sump flow for detection of excess reactor coolant system leakage.

Based on the above reasoning, CP&L has determined that the proposed amendment does not involve a significant hazards consideration.

The staff has reviewed the CP&L determination and finds that the amendment request meets the standards for determining whether a significant hazards condition exists (10 CFR 50.92(c)), that is, the proposed amendment to an operating license for a

facility involves no significant hazards consideration if operation of the facility in accordance with the proposed amendment would not: (1) Involve a significant increase in the probability or consequences of an accident previously evaluated; (2) create the possibility of a new or different kind of accident from any accident previously evaluated; or (3) involve a significant reduction in a margin of safety.

Based on the above discussion, the staff therefore proposes to determine that the proposed changes do not involve a significant hazards consideration.

Local Public Document Room location: Southport, Brunswick County Library, 109 W. Moore Street, Southport, North Carolina 28461.

Attorney for licensee: Thomas A. Baxter, Esquire, Shaw, Pittman, Potts and Trowbridge, 1800 M Street, N.W., Washington, D.C. 20036.

NRC Project Director: Daniel R. Muller.

Carolina Power and Light Company, Docket No. 50-261, H. B. Robinson Steam Electric Plant, Unit No. 2, Darlington County, South Carolina

Date of amendment request: November 6, 1985.

Description of amendment request: The proposed amendment would revise Technical Specifications (TS) for the H. B. Robinson Steam Electric Plant Unit No. 2. The proposed revision involves:

1. Editorial corrections to clarify ambiguities and provide consistency throughout the TS as follows:

(a) To provide consistency throughout the TS, specific references to TS Subsections 6.9.1.d.4 and 6.9.1.d.6 should be generalized to reference the overall section addressing the Semiannual Radioactive Effluent Release Report, TS 6.9.1.d. This change is required in a number of places within Table 3.5-6, Table 3.5-7, and TS Section 3.17.2.

(b) On page 3.5-24, item 1.b.b of Table 3.5-7 requires clarification of the requirements to analyze grab samples taken from the plant stack. The phrase "analyzed for radionoble gases once per 24 hours" has been changed to "within 24 hours." This change clarifies the intended meaning of the statement and standardizes the terminology to make it consistent with similar action statements within the TS.

(c) On page 3.5-25, item l.c.b. of Table 3.5-7 requires a minor change to improve the wording to read "as required by Table 4.10-2" instead of the original phrase "as provided by Table 4.10-2." Aside from being more accurate, the revised statement has a slightly stronger connotation. Any perceived altered meaning conveyed by the revised wording would be more restrictive than the existing text.

(d) Deletion of a reference to automatic control features to prevent exceeding allowable concentrations in the waste gas decay tank from the TS Basis to Section 3.16.4 and deletion of references to automatic diversion to recombiners. These changes are required to reflect actual plant conditions and make no changes to any limiting conditions.

2. Additional changes as follows:

(e) Correction of an error found for the allowed value of the limit or radioactive inventory in the waste gas decay tanks from less than or equal to 6.0E5 to less than or equal to 1.24E4 curies noble gas.

(f) Deletion of isolation features on the RMS-20 Radionoble Gas Monitor from item 5.a of Table 3.5-7 of the TS. The feature was intended to shut down the ventilation system in the lower level of the fuel building due to a high rod signal, however, the building is not airtight and therefore provides an unmonitored escape path.

Basis for proposed no significant hazards consideration determination: Editorial Changes (a), (b), (c) and (d). The licensee has reviewed the proposed editorial changes in accordance with 10 CFR 50.92 Significant Hazards Criteria and determined that they do not constitute a significant hazards consideration. These editorial changes improve the wording of the text and correct an error but do not provide any relief from the requirements of the TS or change the intended operation or administrative requirements of the plant. These changes have no effect on any plant safety parameters, accident mitigation capabilities, or procedures, nor do they adversely affect any components or systems which contribute to the safety of the plant or the ability to properly handle potential offsite releases.

The Commission has provided guidance to the NRC staff for such determinations by providing examples of amendments that are not likely to involve a significant hazards consideration. The proposed changes discussed above are proposed by the staff to be encompassed by example (i); purely administrative changes to the technical specifications. Since the proposed changes, (a), (b), (c) and (d) are similar to the examples which have been determined not likely to involve a significant hazards consideration, the staff proposes to determine that the application for amendments does not involve a significant hazards consideration.

Additional Changes

(e) Waste Gas Decay—Tank—Radioactive Inventory Limit Change. Technical Specification Section 3.16.5 "Waste Gas Decay Tank (Radioactive Materials)" establishes the administrative limits for the allowable radioactive inventory in the Waste Decay Tanks. A CP&L review has identified an error in the allowed value. CP&L has subsequently recomputed that allowable limit in accordance with the guidance provided by the Branch Technical Position ETSB 11-5 in NUREG-0800. The revised limits are provided by this proposed change.

The Commission has reviewed this proposed change in accordance with 10 CFR 50.92 criteria and determined that it does not constitute a significant hazards consideration for the following reasons:

1. Operation of the plant in accordance with the proposed change would not involve a significant increase in the probability or consequences of an accident previously evaluated because the only previously evaluated accident dependent upon the inventory or Radioactive Materials in the Waste Gas Decay Tanks is a failure of the integrity of the tank or system which would release the full contents of the tank to the lower level of the Fuel Handling Building. The tank inventory limit is established to ensure that the off-site consequences of precisely such an event do not exceed allowable limits. The proposed reduction in allowable inventory has been evaluated in accordance with the conservative methodology presented in ETSB 11-5 in NUREG-0800 and demonstrated to comply with the established worst-case off-site dose criteria of 0.5 Rem.

2. Operation of the plant in accordance with the proposed change would not create the possibility of a new or different kind of accident from any accident previously analyzed because the only credible accidents dependent upon the radioactive inventory of the Waste Gas Decay Tank would involve releases of this inventory to the environment as previously discussed. No new accident scenarios have been identified.

3. Operation of the plant in accordance with the proposed change would not involve a significant reduction in the margin of safety because the safety impact of the curie content in the tank is limited to the previously discussed accident. As discussed, the reduction of the limit as provided herein can only serve to increase any conceivable margin of safety.

(f) Lower Level Fuel Handling Building (FHB) Ventilation Isolation Change. As a result of an NRC inspection follow-up item, CP&L evaluated the usefulness of the isolation feature on the RMS-20 Radionoble Gas Monitor. That feature was intended to shutdown the ventilation system in the lower level of the FHB when a high radiation signal was received from RMS-20 which sampled the effluent from that ventilation system. It was originally intended that such isolation of the ventilation system would terminate any release of gaseous or airborne radioactivity which may be generated within that portion of the building. However, since the building is not airtight, it is not possible to terminate a release by containment within the building. The activity would eventually be released through unmonitored, unfiltered leakage from the building with the ventilation shut down.

CP&L concurred with the inspection recommendation that continued, monitored release via the ventilation system with the potentially mitigating benefits of the system filters, would be preferable to a slightly delayed but unmonitored, untreated release via fugitive emissions from the building when the ventilation system is isolated. Therefore, the change requested deletes the reference to this isolation feature as stated in item 5.a of Table 3.5-7.

The Commission has reviewed this change request in accordance with 10 CFR 50.92 criteria and determined that it does not constitute a significant hazards consideration for the following reasons:

1. Operation of the plant in accordance with the change will not significantly increase the possibility or consequences of a previously evaluated accident because previously analyzed accidents affected by this change involve postulated failures of the Waste Gas System containment vessels which are located in the area serviced by the subject ventilation system. The methodology for evaluation of the off-site consequences of a tank or component failure does not take credit for any containment, dispersion, or hold-up time attributable to isolation of the Fuel Handling Building ventilation. As such, the condition of the ventilation system during the postulated releases is irrelevant to the calculation which demonstrates the acceptability of the off-site consequences of that release. The actual off-site consequences, however, would be affected by the continuous operation of the ventilation system. The less favorable dispersion coefficient associated with the shorter duration release would increase the off-site dose to a value several times greater than would result in the previous condition with the ventilation system isolated. However, the worst case scenario calculations demonstrate that the associated dose would be below the allowable limit of 0.5R as established by Branch Technical Position ESTB 11-5, "Postulated Radioactive Releases Due to a Waste Gas System Leak or Failure." Therefore, the increased dose is not considered to be significant and is justified in order to provide release monitoring capability as specified by General Design Criteria 64 of 10 CFR 50, Appendix A.

2. Operation of the plant in accordance with the change will not create the possibility of a new or different kind of accident from any accident previously evaluated because the service area for the ventilation system is limited to the lower levels of the FHB and the building layout does not provide any major interconnection between the upper and lower levels which could provide significant crossflow between those areas. Therefore, the potential safety impact of this ventilation system is limited to the monitoring, filtering, and potential containment (or delay in the release) of the activity contained within the lower level of the Fuel Handling Building. Since the currently evaluated accidents already consider the consequences of a worst case release of activity contained within the lower level of the FHB assuming no credit for the existence of the building, there is no conceivable new accident which has not been analyzed or shown to be bounded by existing analysis.

3. Operation of the plant in accordance with the proposed change would not involve a significant reduction in a margin of safety because any conceivable identified margins of safety would be involved with the previously evaluated off-site release accidents. Since no credit is taken for containment or other mitigating capabilities provided by the building or its ventilation, any margins of safety inherent in or computed for these accidents would not be significantly affected by this change.

Accordingly, the Commission proposes to determine that these changes do not involve significant hazards consideration.

Local Public Document Room location: Hartsville Memorial Library, Home and Fifth Avenues, Hartsville, South Carolina 29535.

Attorney for licensee: Shaw, Pittman, Potts, and Trowbridge, 1800 M Street, N.W., Washington, D.C. 20036.

NRC Project Director: Lester S. Rubenstein.

Connecticut Yankee Atomic Power Company, Docket No. 50-213, Haddam Neck Plant, Middlesex County, Connecticut

Date of amendment request: April 25, 1986.

Description of amendment request: The proposed license amendment adds a new Section 3.24 on "Reactor Coolant System (RCS) Leakage Detection Systems" and revises the existing Table 4.2-1, "Minimum Frequencies for Testing Calibration and/or Checking Instrument Channels," to include appropriate surveillance requirements for the leakage detection systems. This change complements the existing technical specifications on RCS leakage limits and is normally included in standard technical specifications.

Basis for proposed no significant hazards consideration determination: As part of NUREG-0826, Sections 4.16.1 and 4.16.2, the staff evaluated existing leakage detection systems for the Haddam Neck Plant. The conclusions stated that the Haddam Neck Plant should have at least one reliable method of leakage detection with the proper sensitivity and that it be seismically qualified, or that procedures exist that specify actions to be taken if a seismic event occurred.

Connecticut Yankee Atomic Power Company views this proposed change as a plant improvement in that the leakage detection systems for which limiting conditions of operations, action statements and surveillance requirements are being imposed have always been used to verify the RCS leakage limits in Technical Specification 3.14. The proposed change does not impact the way the equipment is operated nor any setpoints or alarms. Neither has it, in the case of the volume control tank level monitoring system, created the need to develop a procedure to do inventory balances.

The Commission has provided examples (48 FR 14870, April 6, 1983) of actions not likely to involve a significant hazards consideration. Example (ii) of this guidance states that a change that constitutes an additional limitation, restriction or control not presently included in the technical specifications, for example, a more stringent surveillance requirement would not likely constitute a significant hazard. The staff has reviewed the proposed license amendment and concluded that it falls within the envelope of example (ii) since the proposed amendment adds additional operability and surveillance

requirements to the plant technical specifications concerning leakage detection systems.

Local Public Document Room location: Russell Library, 123 Broad Street, Middletown, Connecticut 06457.

Attorney for licensee: Gerald Garfield, Esquire, Day, Berry and Howard, Counselors at Law, City Place, Hartford, Connecticut 06103-3499.

NRC Project Director: Christopher I. Grimes.

Florida Power and Light Company, et al., Docket No. 50-389, St. Lucie Plant, Unit No. 2, St. Lucie County, Florida

Date of amendment request: April 21, 1986.

Description of amendment request: The amendment would amend operating license NPF-16 to delete license condition 2.C.19 which required the licensee to submit and obtain approval of a new analysis that addresses the potential of large gap releases for extended burnup fuel before storing the extended burnup fuel in the modified spent fuel pool. The extended burnup fuel was defined as having a burnup greater than 38,000 MWD/MTU. The license condition was introduced as a result of the NRC review and approval to increase the storage capacity of the spent fuel pool from 675 to 1076 fuel assemblies, as discussed in the NRC October 16, 1984 letter to the licensee which forwarded Amendment No. 7.

Basis for proposed no significant hazards consideration determination: The Commission has provided guidance concerning the application of the standards in CFR 50.92 by providing certain examples of amendments considered likely, and not likely, to involve a significant hazards consideration. These were published in the Federal Register on April 6, 1983 (48 FR 14870). One of the examples of actions involving no significant hazards considerations, (iv), relates to a relief granted upon demonstration of acceptable operation from an operation restriction that was imposed because acceptable operation was not yet demonstrated. This assumes that the operating restriction and the criteria to be applied to a request for relief have been established in a prior review and that it is justified in a satisfactory way that the criteria have been met. As described above, the license condition was introduced because the license did not demonstrate that extended burnup fuel could be placed in the modified spent fuel pool. The accident of concern in this matter was the fuel handling accident. The licensee, in his application to delete the license condition, provided a safety analysis addressing this issue. The licensee's safety analysis concludes that the existing St. Lucie Unit 2 Final Safety Analysis Report gas gap activities conservatively bound the gas gap activities for fuel assembly burnups out to 60,000 MWD/MTU. We have made a preliminary evaluation of the licensee's safety analysis, and it appears that extended burnup fuel can be placed in the modified spent fuel pool, and that the restriction in the license condition can be deleted. Based upon the above discussion, the staff proposes to determine that the proposed change does not involve a significant hazards consideration.

Local Public Document Room location: Indian River Junior College Library, 3209 Virginia Avenue, Fort Pierce, Florida 33450.

Attorney for licensee: Harold F. Reis, Esquire, Newman and Holtzinger, 1615 L Street, N.W., Washington, D.C. 20036.

NRC Project Director: Ashok C. Thadani.

Florida Power and Light Company, Docket Nos. 50-250 and 50-251, Turkey Point Plant Units 3 and 4, Dade County, Florida

Date of amendments request: April 15, 1986.

Description of amendments request: The proposed amendments would modify the design section of the Technical Specifications to allow the use of burnable poisons that are not in the form of discrete rod clusters but are integal to the fuel rods. Westinghouse Electric Corporation, Water Reactor Divison, issued Topical WCAP-10444-P-A, "Reference Core Report VANTAGE 5 Fuel Assembly" and received NRC approval in SER dated July 1985. In addition, Westinghouse issued Addendum 1 to WCAP-10444-P-A and received NRC approval on March 12, 1986. One feature of the VANTAGE 5 fuel assembly is the feature known as the Integral Fuel Burnable Absorber (IFBA). This type of burnable poison is not in the form of a discrete cluster rods but a boron coating applied to the fuel pellet. Turkey Point Nuclear Units 3 and 4 have demonstrated, through test assemblies, that the IFBA design performs as predicted. Approval of this request will allow the Turkey Point Nuclear Units 3 and 4 to utilize the IFBA feature in future reloads.

Basis for proposed no significant hazards consideration determination: The proposed change to the Turkey Point TS is:

Page 5.2-1

Reactor Core, Item 3, will be modified to indicate that burnable poisons can be integral to the fuel design as well as in the form of rod clusters which are located in vacant rod cluster control guide tubes.

The Commission has provided standards for determining whether a significant hazard consideration exists (10 CFR 50.92(c)). A proposed amendment to an operating license for a facility involves no significant hazards consideration if operation of the facility in accordance with the proposed amendment would not: (1) Involve a significant increase in the probability or consequences or an accident previously evaluated; or (2) create the possibility of a new or different kind of accident from any accident previously evaluated; or (3) involve a significant reduction in margin of safety.

(1) The proposed change will not significantly increase the probability or consequences of an accident previously evaluated since the use of IFBA will have no adverse effect on:

(a) Fuel assembly performance;

(b) Fuel rod mechanical design; and

(c) Thermal-hydraulic core design.

In addition, the proposed amendments require no change to the operational limits and the existing accident analysis remains valid.

(2) The proposed amendments will not create the possibility of a new or different kind of accident not previously evaluated, since this change does not modify the configuration or operation of the plant. Neither the licensee nor the staff could identify a new or different kind of accident.

(3) The proposed amendments will not involve a significant reduction in the margin of safety. As shown in the Westinghouse Topical Report, this design is bounded by the same margin of safety as previous designs and no change in operational limits or the previous accident analysis is required.

Therefore, the staff proposed to determine that the proposed amendments do not involve a significant hazards.

Local Public Document Room location: Environmental and Urban Affairs Library, Florida International University, Miami, Florida 33199.

Attorney for licensee: Harold F. Reis,

Esquire, Newman and Holtzer, P.C., 1615 L Street, N.W., Washington, D.C. 20036.

NRC Project Director: Lester S. Rubenstein.

Georgia Power Company, Oglethorpe Power Corporation, Municipal Electric Authority of Georgia, City of Dalton, Georgia, Dockets Nos. 50-321 and 50-366, Edwin I. Hatch Nuclear Plant, Units Nos. 1 and 2, Appling County, Georgia

Date of amendment request: January 6, 1986, supplementing the submittals of September 13, 1985 and December 14 and 20, 1983.

Description of amendment request: This submittal supplement the submittals dated September 13, 1985 and December 14 and 20, 1983, which were noticed in the **Federal Register** on November 6, 1985 (50 FR 46213) and February 27, 1984 (49 FR 7161). This supplemental request for Technical Specification change relates to the proposed closure times for the scram discharge volume (SDV) vent and drain valves. The purpose of this change is to revise the proposed closure time requirements for these Unit 1 valves. Since the time of the previous submittals, further evaluation of the closure time has shown that different closure time is justified.

Basis for proposed no significant hazards consideration determination: The Commission has provided guidance concerning the application of the standards in 10 CFR 50.92 by providing certain examples (48 FR 14870). One of the examples (ii) of actions involving no significant hazards considerations relates to a change which constitutes an additional limitation, restriction or control not presently included in the Technical Specifications. Since the current Technical Specifications do not have requirements for SDV valve closure times, this requested revision to previously proposed closure times still constitutes an additional limitation not presently in the Technical Specifications and fits this example (ii). The Commission therefore proposes to determine that this action involves no significant hazards considerations.

Local Public Document Room Location: Appling County Public Library, 301 City Hall Drive, Baxley, Georgia.

Attorney for licensee: Bruce W. Churchill, Shaw, Pittman, Potts & Trowbridge, 1800 M Street, NW., Washington, D.C. 20036.

NRC Project Director: Daniel R. Muller.

Georgia Power Company, Oglethorpe Power Corporation, Municipal Electric Authority of Georgia, City of Dalton, Georgia, Dockets Nos. 50-321 and 50-366, Edwin I. Hatch Nuclear Plant, Units Nos. 1 and 2, Appling County, Georgia

Date of amendment request: January 7, 1986, supplementing the submittal of August 20, 1985.

Description of amendment request: This submittal supplements the submittal dated August 20, 1985, which was noticed in the **Federal Register** on September 25, 1985 (50 FR 38915). This supplemental request for Technical Specification change relates to the proposed requirements concerning closure of containment purge and vent valves on high radiation signals. The supplemental request would modify a containment isolation valve table to show that the purge and vent valves are closed by a high radiation signal as well as by a Group 2 isolation signal.

Basis for proposed no significant hazards consideration determination: The Commission has provided guidance concerning the application of the standards in 10 CFR 50.92 by providing certain examples (48 FR 14870). One of the examples (ii) of actions involving no significant hazards considerations relates to a change which constitutes an additional limitation, restriction or control not presently included in the Technical Specifications. Since the current Technical Specifications do not have requirements for closure of purge and vent valves upon a high radiation isolation signal, this requested revision still constitutes an additional limitation not presently in the Technical Specifications and fits example (ii) above. The Commission therefore proposes to determine that this action involves no significant hazards considerations.

Local Public Document Room Location: Appling County Public Library, 301 City Hall Drive, Baxley, Georgia.

Attorney for licensee: Bruce W. Churchill, Shaw, Pittman, Potts & Trowbridge, 1800 M Street, N.W., Washington, D.C. 20036.

NRC Project Director: Daniel R. Muller.

GPU Nuclear Corporation, Docket No. 50-219, Oyster Creek Nuclear Generating Station, Ocean County, New Jersey

Date of amendment request: February 24, 1986.

Description of amendment request: The proposed amendment would make a temporary change to the Oyster Creek Security Plan to describe a special situation at the site protected area boundary. This change is being requested to facilitate construction of the Expanded Safety System Facility (ESSF) at the Oyster Creek site.

Basis for proposed no significant hazards consideration determination: The licensee is proposing a temporary change of the site protected area boundary. This change would not decrease the capability of the security system to provide for adequate protection of the Oyster Creek site because extensive compensatory measures have been proposed to compensate for any potential reduction of security experienced in implementing the temporary change. This temporary change would be in effect only during construction working hours for the ESSF at the site. Any additional description of the change beyond that stated above involves Safeguards Information which is being withheld from public disclosure pursuant to 10 CFR 73.21.

This amendment involves no change to a safety limit, a limiting condition for operation (LCO), or a surveillance requirement or equipment to operate the station.

Based on the above the staff has concluded that operation of the Oyster Creek plant, in accordance with the proposed amendment.

(1) *Does not involve a significant increase in the probability or consequences of a previously evaluated accident because:* The proposed amendment would provide measures to compensate for the change to the site protected area boundary. The proposed amendment also does not change a safety limit, an LCO or a surveillance requirement or equipment to operate the station.

(2) *Does not create the possibility of a new or different kind of accident from any accident previously analyzed because:* The proposed amendment would maintain a protected area barrier around the station. The proposed amendment also does not change a safety limit, an LCO or a surveillance requirement or equipment to operate the station.

(3) *Does not involve a significant reduction in a margin of safety because:* The proposed amendment would be temporary, apply only during construction working hours and provide measures to compensate for the change to the site protected area boundary. The proposed amendment also does not change a safety limit, an LCO or a surveillance requirement on equipment to operate the station.

Therefore, because the licensee's request meets the above three criteria in

10 CFR 50.92(c), the staff proposes to determine that the licensee's proposed change does not involve a significant hazards consideration.

Local Public Document Room Location: Ocean County Library, 101 Washington Street, Toms River, New Jersey 08753.

Attorney for licensee: Ernest L. Blake, Jr.; Shaw, Pittman, Potts, and Trowbridge, 1800 M Street, N.W., Washington, D.C. 20036.

NRC Project Director: John A. Zwolinski.

GPU Nuclear Corporation, Docket No. 50-219, Oyster Creek Nuclear Generating Station, Ocean County, New Jersey

Date of amendment request: April 14, 1986 (TSCR 143).

Description of amendment request: Requests approval of a change to the Appendix A Technical Specifications (TS) pertaining to the surveillance of the instrument line flow check valves. This change is to TS 4.5.0 in Section 4.5, Containment, of the TS for excess flow check valves (EFCV) in instrument lines penetrating containment. The licensee is proposing to revise the TS conditions for which there must be an open position verification of the EFCV when an instrument line is returned to service. The licensee is proposing to revise these conditions in the following manner: (1) delete venting an instrument or instrument line and isolating an instrument and (2) add venting an isolated instrument or instrument line and installation of a new instrument or instrument line.

Basis for proposed no significant hazards consideration determination: The licensee has proposed Techncial Specification Change Request (TSCR) No. 143 to revise the specific conditions in the surveillance requirements of the instrument line EFCV in TS 4.5.0 for which open position verification must be done when an instrument line is returned to service. The basis in the TS for these surveillance requirements is to assure the isolation capability for excess flow and the operability of the instrument sensor when required. The conditions for verification of the open position of the EFCV in a line after the instrument line is returned to service are to assure the operability and, therefore, the isolation capability of the EFCV. The conditions listed in the TS were conditions which could produce a pressure or flow disturbance in an instrument line. When the line was returned to service following the condition, the open position verification of the EFCV assured the isolation capability of the EFCV.

Instrumentation line piping which connects to the reactor coolant system (RCS) and penetrates the primary containment is dead-ended at instruments located in the Reactor Building. These lines are provided with EFCV and manual isolation valves which are operable from the Reactor Building. The EFCV prevents excess flow through an instrument line which would result if there were a broken line outside containment. Without the EFCV, this break would be a loss-of-coolant from the RCS and isolation of the leak could only be done by closing the manual isolation valve.

A pressure or flow disturbance in the instrument line could make the EFCV inoperable and block the line. This would prevent the instrument from communicating with the RCS and performing its intended function. The open position verification of the EFCV, each time an instrument is returned to service after any condition that could have produced a pressure or flow disturbance in that line, assures the operability of the EFCV, of the instrument line and of the instrument line sensor at the end of the line.

The procedures employed in isolating an instrument for testing or calibration should not produce flow disturbances. The instrument is isolated by closing the isolation valves and returned to service still filled with process fluid before the isolation valves are cracked open. Venting an isolated instrument or instrument line should not create a significant flow disturbance as the valves are slightly cracked open to vent air and then closed. Surveillance has proven and design requires that approximately 2 gpm flow is needed to close an EFCV. Isolating and subsequently unisolating an instrument or instrument line and venting an isolated instrument or instrument line should not cause sufficient flow to close the EFCV.

The surveillance requirements for EFCV open position verification should not be required each time an instrument or instrument line is isolated. This TSCR would reduce surveillance time, improve plant availability and reduce radiation exposure to personnel. Venting an unisolated instrument or instrument line may create a flow disturbance. Putting a new instrument or instrument line in service may also create a flow disturbance since, initially, the inlet line will not be filled with process fluid. Therefore, the excess flow check valve will require open position verification for these conditions.

The once per cycle requirement for an isolation test (EFCV functional test) is also performed. This test includes an open position verification test. This will ensure correct valve positioning and valve operability.

This TSCR Will not affect the safety of the plant because no system design, configuration or hardware changes will be made. This TSCR will not increase the potential for radioactive discharge to the atmosphere, since closing of the EFCV in case of high flow (approximately 2 gpm) will prevent significant discharge of fluid from the RCS.

The proposed change remains compatible with, and in some respects more restrictive than, the BWR Standard Techncial Specifications (STS), NUREG 0123, Revision 3. The STS require that each instrumentation line EFCV be demonstrated operable one per 18 months.

It has been determined, based on the above, that this change request involves no significant hazards considerations in that operation of the Oyster Creek plant in accordance with the proposed amendment:

1. *Does not involve a significant increase in the probability or consequences of an accident previously evaluated because:*

Surveillance experience and practice indicates that (1) isolating an instrument or instrument line or (2) venting an isolated instrument or instrument line does not achieve sufficient flow to close an EFCV.

2. *Does not create the possibility of a new or different kind of accident from any accident previously evaluated because:*

This request involves no system design, configuration or hardware change.

3. *Does not involve a significant reduction in a margin of safety because:*

The remaining surveillance requirements and the additional conditions proposed are adequate to ensure EFCV operability and correct positioning.

Therefore, because the licensee's request meets the above three criteria in 10 CFR 50.92(c), the staff proposes to determine that the licensee's proposed change does not involve a significant hazards consideration.

Local Public Document Room location: Ocean County Library, 101 Washington Street, Toms River, New Jersey 08753.

Attorney for licensee: Ernest L. Blake, Jr.; Shaw, Pittman, Potts, and Trowbridge, 1800 M Street, N.W., Washington, D.C. 20036.

NRC Project Director: John A. Zwolinski.

Mississippi Power & Light Company, Middle South Energy, Inc., South Mississippi Electric Power Association, Docket No. 50-416 Grand Gulf Nuclear Station, Unit 1, Claiborne County, Mississippi

Date of amendment request: February 28, 1986.

Description of amendment request: The proposed amendment would make two changes in the facility Technical Specifications: (1) Change the maximum closing time of a containment isolation valve to reflect the results of ASME Code Section XI testing and delete the associated footnote; and, (2) add the location of an automatic sprinkler system to be installed in the auxiliary building.

Basis for proposed no significant hazards consideration determination: The Commission has provided standards for determining whether a significant hazards consideration exists as stated in 10 CFR 50.92. A proposed amendment to an operating license for a facility involves no significant hazards considerations if operation of the facility in accordance with a proposed amendment would not: (1) Involve a significant increase in the probability or consequences of an accident previously evaluated; or (2) Create the possibility of a new or different kind of accident from any accident previously evaluated; or (3) Involve a significant reduction in a margin of safety.

The licensee has made an analysis of significant hazards considerations using the standards of 10 CFR 50.92 and has concluded that the proposed amendment does not involve a significant hazards consideration. The NRC staff has made a preliminary review of licensee's analysis and associated bases. Staff's discussion of the proposed amendment as it relates to the three standards follows.

Change (1) in the proposed amendment would change the maximum closing time in Technical Specification Table 3.6.4-1, "Containment and Drywell Isolation Valves" for containment isolation valve E12-F394 from 35 seconds to 43 seconds. This valve is the inboard containment isolation valve in the line from the residual heat removal (RHR) system to the reactor head spray. The footnote to this specification, which would be deleted by change (1), indicates that the present value is an initial value and the final value is to be determined during ASME Section XI testing. The proposed value is based on test data and an allowable ASME Section XI margin to assure operability of the valve as designed (Technical Specification Bases 3/4.6.4). Valve E12-F394 is closed during reactor power operation and would only be open during a cool down of the reactor when reactor pressure is less than RHR operating pressure. The change in specified closing time of this valve does not involve a significant increase in the probability or consequences of an accident previously evaluated because this valve is closed during power operation, the initial condition assumed in previously evaluated accidents. The change in specified closing time does not create the possibility of a new or different kind of accident from any accident previously evaluated because the ASME Section XI test criteria assure the valve will close as designed. The change does not involve a significant reduction in a margin of safety because closing time of this valve is not a consideration in the analysis of previously evaluated accidents.

Change (2), the addition of a sprinkler system in the auxiliary building (Technical Specification 3.7.6.2), results from a design change to install a wet pipe automatic sprinkler system in Fire Zone 1A424 that will be used to store combustibles during refueling operations and in Fire Zones 1A417 and 1A428 which are adjacent to Fire Zone 1A424. Both Fire Zones 1A417 and 1A428 contain Division I and Division II safe shut down components. Fire Zone 1A424 contains safety-related cables. Fire protection features presently available in these zones consist of smoke detectors, portable fire extinguishers and fire hoses. The sprinkler system is proposed to be added to fulfill a commitment made to the NRC in a July 16, 1982 letter. The NRC staff has previously evaluated fire hazards in Fire Zone 1A424 as a part of its review of fire protection prior to licensing Grand Gulf Nuclear Station (GGNS) Unit 1. In Supplement No. 3 to the GGNS Safety Evaluation Report (NUREG-0831), dated July 1982, the staff concluded that automatic sprinkler protection must be provided in Fire Zone 1A424 before refueling operations begin. Based on its preliminary review of the licensee's February 28, 1986, submittal, the staff concluded that change (2) would not involve a significant increase in the probability or consequences of an accident previously evaluated nor would the change create the possibility of a new or different kind of accident from any accident previously evaluated because the addition of automatic sprinklers in this area was previously considered and required by the staff and the design of the system meets applicable pipe code and seismic requirements. The proposed change does not involve a significant reduction in a margin of safety because the fire protection of safety-related cable and equipment provided by the addition of a sprinkler system offsets the fire hazard of combustible materials stored in the area during refueling.

Accordingly, the Commission proposes to determine that the proposed amendment does not involve a significant hazards consideration.

Local Public Document Room location: Hinds Junior College, McLendon Library, Raymond, Mississippi 39154.

Attorney for licensee: Nicholas S. Reynolds, Esquire, Bishop, Liberman, Cook, Purcell and Reynolds, 1200 17th Street, NW., Washington, DC 20036.

NRC Project Director: Walter R. Butler.

Mississippi Power & Light Company, Middle South Energy, Inc., South Mississippi Electric Power Association, Docket No. 50-416 Grand Gulf Nuclear Station, Unit 1, Claiborne County, Mississippi

Date of application for amendment: April 14, 1986.

Brief description of amendment: The amendment would make five changes in the Technical Specifications: (1) Change Figure 5.1.1-1 "Exclusion Area and Gaseous Effluent Release Points" to show the area for Unit 1 rather than the area for Unit 1 and Unit 2; (2) change the reference for shutdown reactivity calculational uncertainties and bases in Technical Specification 5.6.1.a from Final Safety Analysis Report (FSAR) Section 4.3 to FSAR Section 9.1; (3) change the Technical Specification Bases 3/4.3.2 "Isolation Actuation Instrumentation" to reflect a diesel generator start time that is consistent with the associated Technical Specification; (4) change a Halon panel number in Technical Specification Table 3.3.7.9-1 "Fire Detection Instrumentation" from 1H13-P930 to SH13-P930; and (5) add "control room to shutdown panel transfer switch" to Technical Specification Table 3.3.7.4-1 "Remote Shutdown System Controls."

Basis for proposed no significant hazards consideration determination: The Commission has provided standards for determining whether a significant hazards consideration exists as stated in 10 CFR 50.92. A proposed amendment to an operating license for a facility involves no significant hazards considerations if operation of the facility in accordance with a proposed amendment would not: (1) Involve a significant increase in the probability or consequences of an accident previously

evaluated; or (2) Create the possibility of a new or different kind of accident from any accident previously evaluated; or (3) Involve a significant reduction in a margin of safety.

The licensee has provided an analysis of significant hazards considerations in its April 14, 1986 request for a license amendment. The licensee has concluded, with appropriate bases, that the proposed amendment meets the three standards in 10 CFR 50.92 and, therefore involves no significant hazards consideration.

The Commission has also provided guidance concerning the application of these standards by providing examples of amendments considered likely and not likely, to involve a significant hazards consideration. These were published in the **Federal Register** on April 6, 1983 (48 FR 14870). The NRC staff has made a preliminary review of the licensee's submittal. A discussion of these examples as they relate to the proposed amendment follows.

One of the examples of actions involving no significant hazards consideration (i) involves an administrative change to correct an error or achieve consistency throughout the Technical Specifications. Changes (1), (2), (3) and (4) are similar to this example. Change (1) would change the drawing of the exclusion area to be consistent with the label on the drawing which states that the exclusion area radius is 696 meters from the centerline of the Unit 1 reactor. The present drawing shows an exclusion area of which the northern part is formed by a semicircle with a radius of 696 meters from the centerline of the Unit 2 reactor, the southern part is formed by a semicircle with a radius of 696 meters from the centerline of Unit 1 reactor and the center part is the rectangular area between the two semicircles. The presently shown exclusion area would be applicable if both Units 1 and 2 were operating but it is incorrect with only Unit 1 operating. Change (2) would reference FSAR Section 9.1 for calculational uncertainties and biases for shutdown reactivity calculations for the spent fuel stored in the spent fuel pool. The present reference, FSAR Section 4.3, is incorrect because it describes shutdown reactivity for fuel when it is loaded into the reactor core and does not describe the spent fuel when it is stored in the storage racks. FSAR Section 9.1 describes these uncertainties for the spent fuel storage racks. Change (3) would change the Bases for Technical Specification 3.3.2 "Isolation Actuation Instrumentation" to be consistent with the associated Technical Specification which is based on a diesel generator start time of 10 seconds. When the Technical Specification was previously changed to reflect a start time of 10 seconds, the change to the Bases was inadvertently omitted. Change (4) would correct a number designating a Halon panel which is part of the fire detection instrumentation. A drawing review indicated the correct number is SH13-P930. The new designation indicates that this panel is shared for Units 1 and 2. However, the function of the cabinet would not change.

Another one of the examples involves no significant hazards consideration (v) relates to a relief granted from an operating restriction that was imposed because the construction was not yet completed satisfactorily. Change (5) is similar to this example. License Condition 2.C.(22) requires that electrical isolation switches be installed between the control room and the Division 1 remote shutdown panel prior to startup following the first refueling outage. The installation of the "control room to shutdown panel transfer switch", which consists of 36 lockout relays and a master switch, is proposed by the licensee to fulfill this license condition. The proposed change (5) to the Technical Specifications is needed when the switch is installed and made operable, at which time relief from the operating restriction would be granted.

Accordingly, the staff proposes to determine that the proposed changes do not involve a significant hazards consideration.

Local Public Document Room location: Hinds Junior College, McLendon Library, Raymond, Mississippi 39154.

Attorney for licensee: Nicholas S. Reynolds, Esquire, Bishop, Liberman, Cook, Purcell and Reynolds, 1200 17th Street NW., Washington, DC 20036.

Project Director: Walter R. Butler.

Northern States Power Company, Docket No. 50-263, Monticello Nuclear Generating Plant, Wright County, Minnesota

Date of amendment request: March 31, 1986.

Description of amendment request: The proposed amendment would incorporate the new requirements related to an alternate shutdown system (ASDS) to be installed during the 1986 refueling outage to comply with the requirements of Appendix R to 10 CFR Part 50 in addition to other changes in the protection program. Specifically, these changes are:

1. Add Sections 3.13.H/4.13.H, the Limiting Conditions of Operation (LOC) and the Surveillance specifying Requirements for the operability of ASDS.

2. Include in Sections 3.13.C, 3.13.D, and Table 3.13.1, the fire protection features of the Reactor Building addition which houses safety related equipment. These include hose stations, yard hydrant, hose houses and fire detection instrumentation.

3. In Section 3.13.E, and Feedwater Pump Hatch Sprinkler Curtain to the list of sprinkler systems required to be operable.

4. Modify Section 3.13.G to allow penetration fire barrier inoperability when the equipment protected is not required to be operable by TS.

5. In Section 6.1 change the number of members of the shift organization required from four to three for safe shutdown of the reactor from outside the control room.

Basis for proposed no significant hazards consideration determination: The Commission has provided standards for determining whether a significant hazards determination exists as stated in 10 CFR 50.92(C). 10 CFR 50.91 requires that at the time a licensee requests an amendment it must provide to the Commission its analysis, using the standards in 10 CFR 50.92, about the issue of no significant hazards consideration.

In Item (1) above, the licensee states that the requested change is in response to NRC Generic Letter 81-12 and in complying with the requirements of Appendix R to 10 CFR Part 50. These proposed changes ensure that the installation of the ASDS panel will not affect the normal operation of the plant from the control room, and that in the unlikely even of fire in the control or cable spreading room, and alternate means of bringing the plant to safe shutdown exists from the ASDS panel. The licensee's analysis in accordance with 10 CFR 50.91 and 10 CFR 50.92 is as follows:

1. *The proposed amendment will not involve a significant increase in the probability or consequences of an accident previously evaluated.* The Alternate Shutdown System (ASDS) is designed and installed in response to the potential accident of a fire in the control room or cable spreading room as required under Appendix R to 10 CFR Part 50. It has no impact on the probability or consequences of other accidents evaluated for the Monticello Nuclear Generating Plant as isolation and electrical separation of the ASDS panel from the control room, except when in use in the event of a fire in the control room or cable spreading room, is

ensured by the panel design. The ASDS design was reviewed and approved by the NRC staff in a letter from D.B. Vassallo (NRC) to D.M. Musolf dated September 11, 1985. This isolation and electrical separation prevents the panel from causing any increase in the probability of an accident and causes no increase in the consequences of accidents previously evaluated as the control room is still capable of mitigating the accident as it would have prior to installation of the ASDS panel.

2. *The proposed amendment will not create the possibility of a new or different kind of accident from any accident previously analyzed.* The ASDS provides an alternate yet similar means of control for achieving safe shutdown in the event of a fire in the control room or cable spreading room as could be accomplished utilizing system controls from the control room. The isolation and electrical separation prevents the ASDS from interfering with operation from the control room. The panel design is safety grade (Class 1-E) in maintaining the same high standards as the control room and represents no unknown technology. For the above reasons it is concluded that this amendment does not create the possibility of a new or different kind of accident from any previously analyzed.

3. *The proposed amendment will not involve a significant reduction in the margin of safety.* The proposed amendment does not involve any reduction in the safety of those accidents previously analyzed.

The isolation and electrical separation of the ASDS panel from the control room [ensures that] the plant has the same capabilities to mitigate and/or prevent accidents as it had prior to the installation of the ASDS panel. This proposed amendment represents an increase in the margin of safety in the plants ability to now respond to a fire in the control room or cable spreading room.

For the reasons stated above, we have concluded that this portion of this license amendment does not involve a significant hazards consideration. The installation of the ASDS and this associated license amendment is intended to bring Monticello Nuclear Generating Plant into compliance with current NRC regulation.

In Item (2) above, the licensee requested to update those areas required to have hose station, yard hydrant hose house and fire detection instrumentation coverage because they contained safety-related equipment as a result of the Reactor Building addition. The licensee's no significant hazards consideration analysis is as follows:

1. *The proposed amendment will not involve a significant increase in the probability or consequences of an accident previously evaluated.* The Reactor Building addition fire protection features have been designed and installed consistent with similar fire protection features in other areas of the plant and in accordance with the applicable requirements of Appendix R to 10 CFR Part 50. These features and their inclusion in the technical specifications have no impact on the probability or consequences of accidents evaluated for the Monticello Nuclear Generating Plant.

2. *The proposed amendment will not create the possibility of a new or different kind of accident from any accident previously analyzed.* The Reactor Building addition fire protection features have been designed and installed consistent with similar fire protection features in other areas of the plant and in accordance with the applicable requirements of Appendix R to 10 CFR Part 50. These features and their inclusion in the technical specifications do not create the possibility of a new or different kind of accident from any previously considered for the Monticello Nuclear Generating Plant.

3. *The proposed amendment will not involve a significant reduction in the margin of safety.* The proposed amendment does not involve any reduction in the safety of those accidents previously analyzed.

The fire protection features in the Reactor Building addition provide the same level [of] protection as is provided for other equipment in the plant. This represents no impact in the margin of safety.

For the reasons stated above, we have concluded that this portion of this license amendment does not involve a significant hazards consideration. The installation of these fire protection features in accordance with the Monticello Fire Protection Program provides a level of safety equal to the remainder of the plant.

In Item (3), the licensee has added Feedwater Pump Hatch Sprinkler Curtain to the list of those sprinkler systems required to be operable following completion of the review of Monticello to the requirements of Appendix R to 10 CFR Part 50. In accordance with 10 CFR 50.91 and 10 CFR 50.92, the licensee has provided the following no significant hazards analysis.

1. *The proposed amendment will not involve a significant increase in the probability or consequences of an accident previously evaluated.* The Feedwater Pump Hatch Sprinkler Curtain has been designed and installed consistent with similar fire protection features in other areas of the plant and in accordance with the applicable requirements of Appendix R to 10 CFR Part 50. These features and their inclusion in the technical specifications have no impact on the probability or consequence of accidents evaluated for the Monticello Nuclear Generating Plant.

2. *The proposed amendment will not create the possibility of a new or different kind of accident from any accident previously analyzed.* The Feedwater Pump Hatch Sprinkler Curtain has been designed and installed consistent with similar fire protection features in other areas of the plant and in accordance with the applicable requirements of Appendix R to 10 CFR Part 50. The impact of operation (normal and inadvertent) of this system on equipment in the area has been considered. This system and its inclusion in the technical specifications does not create the possibility of a new or different kind of accident from any previously considered for the Monticello Nuclear Generating Plant.

3. *The proposed amendment will not involve a significant reduction in the margin of safety.* The proposed amendment does not affect the ability of the plant or its equipment to perform as intended and therefore does not involve any reduction in the safety of those accidents previously analyzed.

The proposed change as stated in Item (4) reflects the need for operability requirements for penetration fire barriers in fire area boundaries based on whether the equipment contained in that fire area is required to be operable by the applicable system technical specifications for a given plant condition. This would allow, during refueling and maintenance outages, the ability to perform modifications to the plant without having to provide costly fire watches to protect equipment which is not required to be operable by the system technical specifications. The change also requests to allow a continuous fire watch on at least one side of the barrier or verify the operability of fire detectors on at least one side of the non-functional fire barrier and establish an hourly fire watch patrol. This would reduce the cost of continuous fire watch and recognize the inherent protection provided by the detection system already in the area.

The licensee's no significant hazards consideration analysis is as follows:

1. *The proposed amendment will not involve a significant increase in the*

probability or consequences of an accident previously evaluated. The allowing of penetration fire barrier(s) to be inoperable when equipment protected by that fire barrier(s) is not required by technical specifications does not impact the probability or consequences of an accident previously considered for the Monticello Nuclear Gernerating Plant as that equipments operability has been previously evaluated as part of the bases for the system technical specifications. The allowing of a continuous fire watch on one side of an inoperable barrier or an operable detection system on one side of an inoperable fire barrier and an hourly fire patrol provides equivalent levels of protection and therefore does not impact the probability or consequences of an accident previously evaluated for the Monticello Nuclear Generating Plant.

2. *The proposed amendment will not create the possibility of a new or different kind of accident from any accident previously analyzed.* The allowing of penetration fire barrier(s) to be inoperable when equipment protected by that fire barrier(s) is not required by technical specifications does not create the possibility of a new or different kind of accident from any previously considered for the Monticello Nuclear Generating Plant as the ability to cope with certain equipment inoperable has been previously evaluated as part of the bases for the system technical specifications.

The allowing of a continuous fire watch on one side of an inoperable barrier or an operable detection system on one side of an inoperable fire barrier and an hourly fire patrol provides equivalent levels of protection and therefore does not create the possibility of a new or different kind of accident previously considered for the Monticello Nuclear Plant.

3. *The proposed amendment will not involve a significant reduction in the margin of safety.* The proposed amendment does not involve any reduction in the safety of those accidents previously analyzed.

The systems protected by the penetration fire barriers will be protected when those systems are required to be operable and capable of performing their intended functions. This represents no impact in the margin of safety as when called on the systems will perform their intended functions.

The hourly fire patrols in conjunction with an operable detection system provides equivalent protection to a continuous fire watch. This represents no impact in the margin of safety.

For the reasons stated above, we have concluded that this license amendment does not involve a significant hazards consideration. The allowing of penetration fire barriers to be inoperable will not place accident analyses which form the basis for the technical specifications.

Item 5 reflects a reduction in the number of members of the shift organization required for safe shutdown of the reactor from outside the control room. The licensee states that this change recognizes the improved capability to perform safe shutdown of the reactor from outside the control room as a result of the installation of the ASDA in accordance with Appendix R to 10 CFR Part 50.

The licensee's no significant hazards analysis in accordance with 10 CFR 50.91 and 50.92 is as follows:

1. *The proposed amendment will not involve a significant increase in the probability or consequences of an accident previously evaluated.* The reduction from four to three members of the shift organization required for safe shutdown of the reactor from outside the control room does not impact the probability or consequences of an accident previously considered for the Monticello Nuclear Generating Plant. The alternate shutdown system panel has been designed to provide a single panel outside the control room from which control of the plant could be maintained. The installation of this panel significantly reduces the manpower requirements necessary to perform manual actions while providing an improved mechanism for achieving safe shutdown.

2. *The proposed amendment will not create the possibility of a new or different kind of accident from any accident previously analyzed.* The reduction from four to three members of the shift organization required for safe shutdown of the reactor from outside the control room does not create the possibility of a new or different kind of accident from any previously considered plant for the Monticello Nuclear Generating Plant. The three members of the shift organization in performing the safe shutdown from the alternate shutdown system will be utilizing a system which more closely mimics their normal mode of operation from the control room than those introduced by having four members accomplishing shutdown by predominantly manual actions.

3. *The proposed amendment will not involve a significant reduction in the margin of safety.* The proposed amendment does not involve any reduction in the safety of those accidents previously analyzed. The basic means of achieving safe shutdown has remained the same and a central location has been provided to allow performance of those actions required by three members of the shift organization in lieu of four.

For the reasons stated above, we have concluded that this license amendment does not involve a significant hazards consideration.

The reduction of the required shift organization for safe shutdown of the reactor from outside the control room from four to three does not compromise the ability of the plant to achieve safe shutdown because of the installation of the alternative shutdown system.

The staff has reviewed the licensee's no significant hazards consideration determination and agrees with the licensee's analysis. Therefore, based on this review, the staff has made a proposed determination that the application for amendment involves no significant hazards consideration.

Local Public Document Room location: Environmental Conservation Library, Minneapolis Public Library, 200 Nicollet Mall, Minneapolis, Minnesota 55401.

Attorney for licensee: Gerald Charnoff, Esq., Shaw, Pittman, Potts and Trowbridge, 1800 M Street NW., Washington DC 20036.

NRC Project Director: John A. Zwolinski.

Northern States Power Company, Docket Nos. 50-282 and 50-306, Prairie Island Nuclear Generating Plant, Unit Nos. 1 and 2, Goodhue County, Minnesota

Date of amendments request: February 21, 1986.

Description of amendments request: The proposed amendments would change the expiration date for the Unit 1 Operating License, DPR-2 from June 25, 2008, to August 9, 2013, and change the expiration date for the Unit 2 Operating License, DPR-60, from June 25, 2008, to October 29, 2014.

Basis for proposed no significant hazards consideration determination: The currently licensed term for Prairie Island Nuclear Generating Plant Unit Nos. 1 and 2 is 40 years commencing with issuance of the Provisional Construction Permits (June 25, 1968 for both units). Accounting for the time required for plant construction, this represents an effective operating license term of 34 years and 11 months for Unit 1 and 33 years and eight months for Unit 2. The licensee's application requests a 40-year operating license term for both Prairie Island Units.

The licensee's request for extension of the operating licenses is based primarily on the fact that a 40-year service life was considered during the design and construction of the plant. Although this does not mean that some components will not wear out during the plant lifetime, design features were incorporated to maximize the inspectability of structures, systems and equipment. Surveillance and maintenance practices which have been implemented in accordance with the ASME code and the facility Technical Specifications provide assurance that any unexpected degradation in plant equipment will be identified and corrected.

The design of the reactor vessel and its internals considered the effects of 40 years of opertion at full power and a comprehensive vessel material surveillance program is maintained in accordance with 10 CFR Part 50 Appendix H. Analyses showing compliance with the NRC pressurized thermal shock screening criteria have demonstrated that expected cumulative neutron fluences will not be a limiting consideration. In addition to these calculations, surveillance capsules placed inside the reactor vessel provide a means of monitoring the cumulative effects of power operation.

Aging analyses have been performed for all safety-related electrical equipment in accordance with 10 CFR 50.49, "Environmental qualification of electrical equipment important to safety for nuclear power plants," identifying qualified lifetimes for this equipment. These lifetimes will be incorporated into plant equipment maintenance and replacement practices to ensure that all safety-related electrical equipment remains qualified and available to perform its safety function regardless of the overall age of the plant.

The environmental impact associated with a 40 year operating period was considered in the licensing of the Prairie Island facility. Modifications to the plant and its surroundings during the last 15 years resulted in improving the reliability of plant safety and reducing the environmental impact of plant operations.

Based upon the above, it is concluded that extension of the operating licenses for the Prairie Island Nuclear Generating Plant Unit Nos. 1 and 2 to allow a 40-year service life is consistent with the safety analysis in that all issues associated with plant aging have already been addressed. Since the proposed amendment involves no changes in the Technical Specifications or safety analyses, we conclude that the proposed amendment would not: (i) Involve any significant increase in the probability or consequences of an accident previously evaluated; or (ii) create the possibility of a new or different kind of accident from any accident previously evaluated; or (iii) involve any reduction in the margin of safety.

Based upon the above, the Commission proposes to determine that the proposed amendments, which provide for a 40-year operating life for the Prairie Island Nuclear Generating Plant Unit Nos. 1 and 2, involves no significant hazards considerations.

Local Public Document Room location: Environmental Conservation Library Minneapolis Public Library, 300 Nicollet Mall, Minneapolis, Minnesota.

Attorney for licensee: Jay Silberg, Esquire, Shaw, Pittman, Potts, and Trowbridge, 1800 M Street NW., Washington, DC 22036.

NRC Project Director: George E. Lear.

Omaha Public Power District, Docket No. 50-285, Fort Calhoun Station, Unit No. 1, Washington County, Nebraska

Date of amendment request: March 28, 1986 as supplemented April 9, 1986.

Description of amendment request: The proposed amendment is in response to NRC's July 2, 1984 Generic Letter 84-15 entitled "Proposed Staff Actions to Improve and Maintain Diesel Generator Reliability." The changes, which are discussed in detail below, are intended to reduce the number of unnecessary disel generator cold fast starts, thus making them more reliable.

The amendment would change Technical Specification 2.4, Limiting Condition for Operation of the Containment Cooling System, part (2), Modification of Minimum Requirements. The existing Technical Specification allows, during power operation, the minimum requirements to be modified to allow a total of two of the components listed in a. and b. to be inoperable at any one time (in addition to one raw water pump) provided that the emergency diesel generator connected to the other engineered safeguards 4.16 KV bus (1a4 or 1A3) is started to demonstrate operability. The proposed Technical Specification removes the requirement that the emergency diesel be started.

The amendment would also change Technical Specification 3.1, "Instrumentation and Control," which applies to the checks, calibration, and testing of the reactor protective system (RPS), engineered safety features (ESF), and miscellaneous plant instrumentation and controls. Item 11 of Table 3-2 of the Specification addresses test requirements for the diesel generators. The test requirements are varied and they are performed on a monthly or refueling frequency, depending upon the nature of the specific test. These requirements will be spelled out in far greater detail in modified Specification 3.7. Therefore, the Item 11 of Table 3-2 will be modified to remove the specific test requirements and reference Technical Specification 3.7.

The amendment would modify Technical Specification 3.7(1) to allow for the diesel start (10 seconds) from ambient conditions to be performed at least once per 184 days. The other engine starts in this specification will be allowed to be preceded by an engine prelube period and/or other warm-up procedures recommended by the manufacturer so that mechanical stress and wear on the engine is minimized.

Finally, the amendment would delete Technical Specification 3.7.(1))(3). TS 3.7(1)(e) reads as follows: "Diesel Generator electric loads shall not be increased beyond the continuous rating of 2500 KW." The licensee considers this a design consideration, as addressed in the Fort Calhoun Station Safety Analysis Report, and that it should not be a surveillance requirement.

Basis for proposed no significant hazards consideration determination: The licensee has made a significant hazards consideration determination pursuant to 10 CFR 50.92. The licensee has stated that the proposed changes will not involve a significant increase in the probability or consequences of an accident or malfunction of equipment previously evaluated because the changes are intended to reduce degradation of the emergency diesel generators caused by cold fast starts. In fact, the licensee believes that the probability of malfunction of equipment can be considered to have been lessened. The licensee states that the changes will not create the possibility of a new or different kind of accident from any previously evaluated because the proposed changes do not change the normal operating mode of any existing system, but only alter the testing mode. Finally, the licensee states that the proposed change will not involve a significant reduction in a margin of safety because the changes are intended to provide a less severe method of testing the diesel generators, thus decreasing the likelihood of degradation and wear. In fact, the licensee believes that the proposed changes could be viewed as increasing a margin of safety.

The staff has performed a preliminary review of the licensee's no significant hazards consideration analysis, and it

appears in our view that a no significant hazards consideration is involved. The proposed change to delete the starting of the emergency diesel of one train when the other safeguards train has certain equipment out of service appears to be consistent with the Generic Letter, and no significant hazards considerations appear to be involved. In addition, it appears that the requirements contained in Item 11 of Table 3-2 are now mainly covered under TS 3.7. Finally modifying the specification contained in Section 3.7 appears to be consistent with the recommendations of the Generic Letter, and no significant hazards considerations appear to be involved. Based upon the above discussion, the staff proposes to determine that the proposed changes do not involve hazards considerations.

Local Public Document Room location: W. Dale Clark Library, 215 South 15th Street, Omaha, Nebraska 68102.

Attorney for licensee: LeBoeuf, Lamb, Leiby, and MacRae, 1333 New Hampshire Avenue NW., Washington, DC 20036.

NRC Project Director: Ashok C. Thadani.

Omaha Public Power District, Docket No. 50-285, Fort Calhoun Station, Unit No. 1, Washington County, Nebraska

Date of amendment request: April 25, 1986.

Description of amendment request: The amendment would authorize proposed changes to the Fort Calhoun Station, Unit No. 1 Technical Specifications for the reactor coolant system pressure-temperature limits to support the operation of the unit beyond 8.5 Effective Full Power Years (EFPY) to 15 EFPY. The current technical specifications permit operation to 8.5 FEPY. The proposed changes would change Figures 2-1A, RCS Press-Temp Limits Heatup, Reactor Not Critical; Figure 2-1B, RCS Press-Temp Limits Cooldown, Reactor Not Critical; and Figure 2-3, Predicted Radiation Induced NDTT Shift.

Basis for proposed no significant hazards consideration determination: The licensee has presented its discussion of significant hazards considerations pursuant to 10 CFR 50.92. The discussion is based upon recently obtained reactor vessel beltline weld chemical composition data for the Fort Calhoun Station and its impact on the pressurized thermal shock issue. In the past, the absence of specific weld chemical composition data required assumption of upper bound values for beltline weld copper and nickel content. The chemical composition of all Fort Calhoun reactor vessel beltline welds has recently been documented through searches to Combustion Engineering (CE) welding records and through analysis of physical weld samples removed from identical welds traced to the reactor vessel head. With specific weld chemical composition data, it is no longer necessary to assume the upper bound copper and nickel values for these welds. The effect of this additional information results in an analysis that ensures that fracture thoughness is maintained throughout all conditions of normal operation, including anticipated operational transients and system hydrostatic tests. This is reflected in the proposed 15 EFPY heatup and cooldown limit curves and Figure 2-3 for predicting the fluence induced temperature shift for the limiting reactor vessel beltline material.

Based on this, the licensee has stated that these proposed changes to the technical specifications do not involve a significant hazards consideration as defined in 10 CFR 50.92 because operation in accordance with these changes would not:

(1) Involve a significant increase in the probability or occurrences or the consequences of an accident or malfunction of equipment important to safety previously evaluated in the Safety Analysis Report because the change maintains conservative restrictions on pressure-temperature limits for the reactor vessel based on recently obtained beltline weld chemical composition data and the azimuthal flux distribution.

(2) Create the possibility of a new or different kind of accident than any previoulsy evaluated because this application only revises the heatup and cooldown curves that are bounded by the existing Safety Analysis Report.

(3) Involve a significant reduction in a margin of safety. The methodology of 10 CFR 50.61 has been used to determine the value of the RT_{NDT} shift. The use of the 10 CFR 50.61 methodology, and plant specific weld chemical composition data, enhances the accuracy of the RT_{NDT} shift calculation. This methodology provides the necessary margin of safety to assure that the limit will not be exceeded.

The staff has conducted a preliminary review of the licensee's submittal, including the supporting documentation, and agrees with the licensee that the use of recently obtained vessel beltline weld chemical composition data results in an analysis that meets the criteria of 10 CFR 50.92 in that it does not: (i) Involve any significant increases in the probability or consequences of an accident previously evaluated; or (ii) create the possibility of a new or different kind of accident from any accident previously evaluated; or (iii) involve any reduction in the margin of safety.

Based on this the Commission proposes to determine that the proposed amendment, which provides for operating Fort Calhoun Station, Unit No. 1 for up to 15 EFPY, involves no significant hazards considerations.

Local Public Document Room location: W. Dale Clark Library, 215 South 15th Street, Omaha, Nebraska 68102.

Attorney for licensee: LeBoeuf, Lamb, Leiby, and MacRae, 1333 New Hampshire Avenue NW., Washington, DC 20036.

NRC Project Director: Ashok C. Thadani.

Pennsylvania Power & Light Company, Docket Nos. 50-387 and 50-388, Susquehanna Steam Electric Station, Units 1 and 2 Luzerne County, Pennsylvania

Date of amendment request: December 26, 1985.

Description of amendment request: The licensee in their December 26, 1985, submittal requested several Technical Specification changes for Units 1 and/or 2 which are administrative in nature. The Technical Specification changes are described below:

(1) Corrections to Table 3.6.3-1 (Units 1 and 2) (a) Containment Instrument Gas *Unit 1:* Page 3/4 6-25 of the Unit 1 Technical Specifications (TS) currently lists valve number 1-26-070 as an isolation valve in the Containment Instrument Gas System. The proposed change deletes this valve from the Table, and adds valve number 1-26-164.

The original design for the isolation valves on this one inch penetration was to have check valve 1-26-070 inside containment and a globe valve (SV-12671) outside containment. However, the check valve inside containment is subject to severe environmental conditions such as suppression pool dynamic loads. Therefore, check valve 1-26-164 was added outside containment between the penetration and the globe valve.

Since the arrangement did not explicitly meet the requirements of General Design Criteria (GDC) 56 of 10 CFR 50, Appendix A the licensee requested an exemption. The staff previously review this design and found it acceptable without requiring an exemption.

The licensee states that although valve 1-26-164 is not presently listed in the Unit 1 Technical Specification, that

the valve has been subject to all surveillance testing as if it had already been correctly incorporated into Table 3.6.3-1.

Unit 2: Page ¾ 6-25 of the Unit 2 Technical Specification lists both the 2-26-164 valve and the 2-26-070 valves as Containment Gas System isolation valves. Both valves included in the TS because approval of the aforementioned exemption for both units had not been received. As a conservatism the licensee included both valves in Table 3.6.3-1. For the same reasons discussed above for Unit 1, the licensee is proposing to delete valve 2-26-070 from the table.

(b) High Pressure Coolant Injection (HPCI) *Unit 1:* Page ¾ 6-26 lists HV-155F012 as a Minimum Recirculation Flow (penetration X-211) isolation valve. The licensee proposes to add valve HV-155F046 to this category.

The licensee states that this valve was inadvertently omitted from the Technical Specifications. This valve represents the outer isolation boundary on the X-211 penetration as documented in FSAR Table 6.2-22. Since this isolation arrangement represents a deviation from GDC 56 of 10 CFR 50 Appendix A the licensee requested specific approval. The staff approved the licensee specific design via the Safety Evaluation Report (NUREG-0776) and determined that a specific exemption was not necessary. The licensee states that the HV-155F046 valve is included in the surveillance program and has been properly leak tested.

Unit 2: Page ¾ 6-25: the licensee is requesting the same change as Unit 1 ((b) above) for Unit 2. All of the above justification for Unit 1 applies to Unit 2. The valve which will be added to the Unit 2 listing is HV-255F046.

(c) Reactor Core Isolation Cooling (RCIC) *Unit 1:* Page ¾ 6-26 lists HV149F019 as a RCIC minimum recirculation flow (penetration X-216) isolation valve. The licensee proposed to add HV-149F021 to this category.

The F021 valve was inadvertently omitted from the Technical Specifications. It represents the outer isolation boundary on the X-216 penetration as documented in FSAR Table 6.2-22. This isolation arrangement represented a deviation from GDC 56 of 10 CFR 50 Appendix A. The staff has previously approved this design in the staff's SER (NUREG-0776) and determined that a specific exemption was not necessary. The HV-149F021 valve is included in the surveillance program and has been property leak tested.

Unit 2: Page ¾ 6-26; the licensee is requesting the same change as Unit 1 ((c) above) for Unit 2. All of the above justification for Unit 1 applies to Unit 2. The valve which will be added to the Unit 2 listing is HV-249F021.

(d) Integrated Leak Rate Testing (ILRT) *Unit 1:* Page ¾ 6-24 contains a typographical error. Valve 1-57-195 should read 1-57-194. This valve is properly identified in FSAR Table 6.2-22 (Penetration X-61A), and has been properly identified in all controlling procedures/documents.

(2) Addition to Plant Operation Review Committee (PORC) Membership *Unit 1 and 2:* The licensee proposes that the Assistant Superintendent-Outages be added to the PORC Composition listing in Section 6.5.1.2.

The Assistant Superintendent-Outages meets the qualifications requirements of Plant Manager under ANSI/ANS-3. 1-1978, Paragraph 4.2.1 (Reference FSAR Subsection 13.1.3.1).

This expansion of PORC membership is intended to increase the experience/expertise base of the PORC. The addition of the Assistant Superintendent of Plant-Outages to the PORC membership list will vest in that position legal responsibilities to advise/recommend to the Superintendent on matters related to nuclear safety commensurate with those responsibilities inherent in managing nuclear power plant outage activities.

The qualification/education/training requirements for the Assistant Superintendent-Outages are the same as those for the "operating" Assistant Superintendent, thus making the Assistant Superintendent-Outages qualified for management of operating nuclear power plant activities.

(3) Deletion of Offsite Organization Position *Unit 1 and 2:* The deletion of the position "Vice President-Engineering and Constructional-Nuclear" and the subsequent realignment as indicated in the proposed change to Figure 6.2.1-1 reflects PP&L's shift from construction to operation of the Susquehanna plant.

The personnel requirements of ANSI/ANS 3.1-1978 do not apply to this change, since the scope of these guidelines does not rise above the functional level of "Manager."

(4) Generic Letter No. 85-19 *Units 1 and 2:* The licensee has requested changes for both Units 1 and 2 based on the recommendations of Generic Letter 85-19, "Reporting Requirements on Primary Coolant Iodine Spikes". The licensee has added the appropriate information in accordance with Generic Letter 85-19.

(5) Snubbers *Unit 1:* Two changes are proposed by the licensee to specification 3/4.7.4: (1) Deletion of references to Table 3.7.4-1. Removal of the snubber table was approved by NRC via Amendment 36 to the Unit 1 Operating License. The references to it were inadvertently left in the text of Specification 3/4.7.4. (2) Correction of sampling expression. The correct expression is 35 (1+C/2). This typographical error was made in Amendment 36 to the Unit 1 operating license.

Basis for no significant hazards considerations determination: The licensee has stated that the proposed changes do not involve a significant increase in the probability or consequences of an accident previously evaluated. (1a) Containment Instrument Gas: The subject penetrations (Units 1 and 2) are required to meet NRC approved provisions for containment isolation. The analysis of how Susquehanna complies with these provisions is provided in the FSAR. The proposed changes, as described above, are consistent with the presently accepted analysis as contained in the staff's SER. (1b) HPCI: The Minimum Recirculation Flow penetrations have a configuration that represents a deviation from 10 CFR 50 Appendix A, GDC 56. The subject outer isolation valves were approved in the staff's original SER as a result of the licensee's exemption request. Therefore, addition of these valves to the respective Unit 1 and Unit 2 tables is consistent with prior analysis. (1c) RCIC: The Minimum Recirculation Flow penetrations have a configuration that represents a deviation from 10 CFR 50 Appendix A, GDC 56. The subject outer isolation valves were approved in the staff's original SER as a result of the licensee's exemption request. Therefore, addition of these valves to the respective Unit 1 and Unit 2 tables is consistent with prior analysis. (1b) ILRT: This change corrects a typographical error and is, therefore, administrative in nature.

2. Addition to PORC Membership: Changes in PORC membership are reviewed based on administrative requirements. They have no relationship to the accident analyses.

3. Deletion of Offsite Organization Position: Changes in organizational structure are reviewed based on administrative requirements. They have no relationship to the accident analyses.

4. Generic Letter No. 85-19: These changes are changes to reporting requirements, based on the changes to 10 CFR 50.72 and 73. This part of the change has no relationship to the accident analyses. With respect to the deletion of the shutdown requirement when specific activity limits are exceeded for 80 hours in a 12 month

period, 10 CFR 50.72 as presently written will result in mitigating action much sooner should cladding failures occur. Therefore, implementation of the regulation changes, will not involve a significant increase in the probability or consequences of an accident previously evaluated.

5. Snubbers: As described above, the changes to this specification involve an editorial change and the correction of a typographical error. These changes are therefore administrative.

The changes do not create the possibility of a new or different kind of accident from any accident previously evaluated as all the above changes do not affect the licensee's presently acceptable accident analyses.

The proposed changes do not involve a significant reduction in a margin of safety for the reasons below:

Changes 1 a, b, and c were shown to be corrections which describe the basis for the as-built safety margin provide by the SSES Containment Isolation design. Therefore, these ensure the actual safety margin is maintained.

Changes 1d, 2, 3, and 5 are due to typos, editorial changes or changes in the organization; none of these types of administrative changes form the basis for the margin of safety inherent in the design of SSES.

Change 4 reflects changes in Federal Regulations which ensure certain reporting requirements are met and subsequent actions taken independent of TS. Since the control is simply moving from one document to another, both of which represent legal requirements, there is no loss in any safety margin.

The NRC staff agrees with the licensee's evaluation in these regards and proposes to find the proposed changes do not involve a significant hazards consideration.

Local Public Document Room location: Osterhout Free Library, Reference Department, 71 South Franklin Street, Wilkes-Barre, Pennsylvania 18701.

Attorney for licensee: Jay Silberg, Esquire, Shaw, Pittman, Potts and Trowbridge, 1800 M Street, N.W., Washington, D.C. 20036.

NRC Project director: Elinor G. Adensam.

Pennsylvania Power & Light Company, Docket No. 50-388, Susquehanna Steam Electric Station, Unit 2, Luzerne County, Pennsylvania

Date of amendment request: April 4, 1986.

Description of amendment request: The licensee in their April 4, 1986, submittal requested changes to the Susquehanna Unit 2 Technical Specifications. The proposed changes are intended to support plant modifications which will improve the containment isolation function and the testability of the Feed-water system. The proposed changes effect Table 3.6.1-1, "Primary Containment Isolation Valves". The proposed change to this table replaces the two valves listed as the Reactor Water Clean-up (RWCU) Return Manual isolation valves with two new valves. The valves being replaced (HV-244F042 and HV-244F104) are not being removed from the plant, but they will no longer serve as containment isolation valves. These valves are a significant contributor to leakage during local penetration testing due to their other function, throttling valve for the RWCU system operation. The new valves (HV-24182A&B) will assume the containment isolation function, and the existing FWCU valves will continue to serve as throttling valves for the RWCU system. Additionally, Table 3.8.4.2-1 "Motor-Operated Valves Thermal Overload Protection" has been modified to reflect the addition of the two new motor operated valves (HV-24182A&B). These new valves are equipped with thermal overload protection devices and as a result should be incorporated into Table 3.8.4.2-1 of the Technical Specifications.

Basis for proposed no significant hazards consideration determination: The licensee finds that:

I. The proposed changes do not involve a significant increase in the probability or consequences of an accident previously evaluated for the following reasons:

FSAR Section 5.4.8.2 states that the RWCU System is classified as a primary Power Generation System and is not an Engineered Safety Feature. The FSAR describes the function of the HV-244F042 and HV-244F104 system return valves as long term leakage control. Instantaneous reverse flow isolation is provided by the G33-2F039A&B check valves, further downstream in the RWCU piping. This modification will reassign the long term leakage control function from valves HV-244F042 and HV-244F104 to th new valves HV-24182A&B. The location of the new valves will be downstream from the G33-2F029A&B check valves and will not alter their present function of instantaneous reverse flow isolation. The motor-operated HV-24182A&B isolation valves will function as positive-closing containment isolation valves for the RWCU branch connections to Feedwater penetrations X-9A and X-9B and will not increase the probability of an accident or malfunction of equipment related to safety.

II. The proposed changes do not create the possibility of a new or different kind of accident from any accident previously evaluated for the following reasons:

FSAR Section 5.4.8.2 describes the safety-related portions of the RWCU System. This modification will improve RWCU capability to serve these safety-related functions by reducing containment valve leakage via new containment isolation valves HV-24182A&B. FSAR Section 6.2.4.3.2.1 identifies the safety-related function of the Feedwater containment isolation valves. This modification will not alter the present function of the Feedwater valves nor create a possibility for an accident or malfunction of a different type than already evaluated in the FSAR.

III. The proposed changes do not involve a significant reduction in a margin of safety for the following reason:

As noted above, the containment isolation for the affected feedwater penetration will be improved by the addition of the new valves, because they will not be used for throttling purposes and, therefore, should be more leak tight. The margin of safety defined by the containment isolation function is, therefore, improved.

The NRC staff agrees with the licensee's evaluation in these regards and proposes to find the proposed changes to not involve a significant hazards consideration.

Local Public Document Room location: Osterhout Free Library, Reference Department, 71 South Franklin Street, Wilkes-Barre, Pennsylvania 18701.

Attorney for licensee: Jay Silbert, Esquire, Shaw, Pittman, Potts and Trowbridge, 1800 M Street, N.W., Washington, D.C. 20036.

Project Director: Elinor G. Adensam.

Philadelphia Electric Company, Public Service Electric and Gas Company, Delmarva Power and Light Company, and Atlantic City Electric Company, Dockets Nos. 50-277 and 50-278, Peach Bottom Atomic Power Station, Units Nos. 2 and 3, York County, Pennsylvania

Date of application for amendments: January 14, 1986.

Description of amendment request: The proposed change in the Technical Specifications (TSs) would remove working referring to the spent fuel pool storage and water level requirements and replace it with water level requirements that are based upon the

wording in Standard Technical Specifications for Boiling Water Reactors (NUREG–0123, Revision 3). Specifically, the current Limiting Condition for Operation (LCO) in 3.10.C is intended to establish the minimum water coverage above the fuel while it is being transported by the fuel handling equipment. Therefore, the current TSs could be misinterpreted as meaning the minimum water coverage above the fuel while it is stored in the storage racks at the bottom of the pool which could conflict with the actual design of the storage pool. The Standard Technical Specifications provide a value for water coverage which is based on water coverage above the fuel in the storage in the storage racks. The proposed revisions to the Peach Bottom TSs and the associated bases would not change the design or operating procedures associated with the storage pool water level, but would result in standardizing the TSs language to more fully conform with the Standard TSs, thereby clarifying the intent of Section 3.10.C which is intended to assure a minimum inventory of water in the spent fuel pool.

Basis for proposed no significant hazards consideration determination: The Commission has provided standards for determining whether a significant hazards consideration exists (10 CFR 50.92(c)). A proposed amendment to an operating license for a facility involves no significant hazards consideration if operation of the facility in accordance with the proposed amendment would not: (1) Involve a significant increase in the probability or consequences of an accident previously evaluated, or (2) create the possibility of a new or different kind of accident from any accident previously evaluated, or (3) involve a significant reduction in a margin of safety.

The proposed revision does not change the design or operating procedures associated with the storage pool water level. The lowest elevation of the pool overflow weir to the skimmer surge tank is such that more than 22 feet is always maintained above the fuel stored in the storage racks. The minimum water level above the stored fuel conforms to the Peach Bottom FSAR (Section 10.3) and recently was reevaluated and found to be acceptable by the staff by letter dated February 19, 1986. Therefore, the proposed changes do not involve a significant increase in the probability or consequences of an accident previously evaluated because they do not involve design or procedures changes but merely clarify the actual design and operating conditions of the facility in accordance with the staff's Standard TSs. The proposed changes do not create the posssibility of a new or different kind of accident from any accident previously evaluated because they do not change any previously approved design features or operating procedures but rather they would further clarify the intent of these design and operating features. Finally, these changes would not result in a significant reduction in a margin of safety since the proposed wording would further reduce the likelihood of a refueling accident during a below normal spent fuel water level condition.

On the basis of the above, the Commission has made a proposed determination that the amendment application does not involve a significant hazards consideration.

Local Public Document Room Location: Government Publication Section, Library of Pennsylvania, Education Building, Commonwealth and Walnut Streets, Harrisburg, Pennsylvania.

Attorney for Licensee: Troy B. Conner, Jr., 1747 Pennsylvania Avenue, N.W., Washington, D.C. 20006.

NRC Project Director: Daniel R. Muller.

Philadelphia Electric Company, Public Service Electric and Gas Company, Delmarva Power and Light Company, and Atlantic City Electric Company, Dockets Nos. 50–277 and 50–278, Peach Botton Atomic Power Station, Units Nos. 2 and 3, York County, Pennsylvania

Date of application for amendments: April 22, 1986.

Description of amendment request: The proposed change in the Technical Specification (TSs) would revise the licensee's earlier amendment request of February 21, 1985 which was noticed in the **Federal Register** on May 21, 1985 (50 FR 20985). The changes submitted on April 22, 1986 were requested as a result of the NRC staff's review of the February 21, 1985 submittal. The proposed changes include the following: (1) Incorporation of additional fire detectors into the table identifying the detectors subject to the operability and surveillance requirements of the Standard Technical Specifications (TSs), and (2) modification of the previously proposed fire barrier surveillance requirements to reflect the guidance of the Technical Specifications. The proposed changes are in five general areas as described below.

Basis for proposed significant hazards consideration determination: The first change deals with minor editorial and typographical revisions which insert a missing word (or) and to change Commission to NRC. The Commission has provided guidance concerning the application of standards for determining whether a significant hazards consideration exists by providing certain examples (51 FR 7744). Example (i) of actions not likely to involve a significant hazards consideration involves a purely administrative change to technical specifications: for example, a change to achieve consistency throughout the technical specifications, correction of an error, or a change in nomenclature. The proposed changes described above are consistent with Example (i) since they correct a error and change nomenclature. On this basis, the staff proposes to determine that the change does not involve a significant hazards consideration.

The second change is associated with the addition of thermal heat detection cable system as fire detectors in the list of fire detectors in Table 2.14.C.1. The Commission's Example (ii) of actions not likely to involve a significant hazards consideration relates to a change that constitutes an additional limitation, restriction, or control not presently included in the technical specifications, e.g., a more stringent surveillance requirement. The proposed change fits the above example since it would add surveillance and operability requirements to the thermal heat detection cable system which are presently not included in the TSs.

The third change is related to the surveillance frequency of fire doors. The February 22, 1985 proposed TSs would perform operability tests on fire doors on a quarterly interval. The NRC staff indicated that this deviation from the Standard Technical Specifications (TSs) surveillance frequencies was unacceptable. Thus the licensee has proposed an increased surveillance requirement of testing fire doors once per month in accordance with the STS. Since the current TSs surveillance requirements require surveillance only once per 18 months, the proposed changes would add additional limitations and controls not presently found in the Peach Bottom TSs and therefore, are more stringent. This change is consistent with Example (ii) of the Commission's guidance discussed above. On this basis, the staff proposes to determine that the change does not involve a significant hazards consideration.

The fourth change involves surveillance testing of penetration seals. The licensee proposed in its February 22, 1985 submittal that approximately 10 percent of the fire barrier penetration seals be subjected to an inspection every 18 months. After discussions with

the NRC staff, the licensee now proposes that TSs should be changed to read at least 10 percent of each type of fire barrier penetration seal be tested. This proposed change conforms with STS. The current TSs requirements require visual inspection of penetration fire barriers at least once per 18 months. The staff has proposed guidance in the form of STS which permit inspection of 10 percent of each type of fire barrier penetration seals once every 18 months. The licensee states:

The proposed change to inspect 10 percent of each type of fire barrier penetration seal ensures that a representative sample of each type of penetration seal is being periodically monitored to assure integrity of the fire barrier essential to plant safety. Broad protection of all penetrations is maintained by the Technical Specification that triggers additional inspections in the event penetration seal degradations are found. The specification, as proposed, is consistent with the NRC guidance provided in the Standard Technical Specifications. This change does not involve a significant hazards consideration since it does not:

(1) involve a significant increase in the probability or consequences of an accident previously evaluated because this surveillance requirement assures the integrity of the penetration seals essential to mitigating the consequences of a fire.

(2) create the possibility of a new or different kind of accident from any accident previously evaluated because the scope of a surveillance program does not establish a potential new accident precursor.

(3) involve a significant reduction in the margin of safety because the proposed surveillance program performs its intended function while minimizing the exposure of safety equipment to potenital physical damage due to the inspection process.

The staff has reviewed the licensee's above statement and agrees with the licensee's conclusions. Therefore, the staff proposed to determine that the proposed change does not involve a significant hazards consideration.

The fifth change proposes that all dampers that do not require scaffolding for inspection or present ALARA concerns be inspected every 18 months. In addition, 25 percent of the excluded dampers should also be inspected every 18 months so that all excluded dampers are inspected at least once per 6 years (72 months). In its April 22, 1986 application the licensee states:

Of approximately 100 dampers subjected to these proposed surveillance requirements, approximately 70 dampers would be inspected every 18 months in accordance with the proposed specification 4.14.D.1.b. An estimated 31 dampers would be inspected over a six-year period (25 percent every 18 months) in accordance with proposed specification 4.14.D.1.c.

The NRC staff has reviewed the licensee's bases concerning the 31 dampers proposed not to be inspected every 18 months. The NRC staff finds that the licensee's arguments that most of these dampers are inaccessible which will minimize tampering and abuse, that previous inspections of these dampers indicate only one apparent damper failure (determined by visual inspection) since 1981, and that the majority of dampers will be inspected every 18 months support the following licensee's conclusions.

The proposed change to inspect 25 percent of the fire dampers requiring scaffolding for inspection, or involving ALARA concerns, every 18 months, does not involve a significant hazards consideration for the reasons previously enumerated in this application and because it does not:

(1) involve a significant increase in the probability or consequences of an accident because the surveillance requirement for the fire dampers assured the integrity of the fire barrier essential to mitigating the consequences of a fire.

(2) create the possibility of a new or different kind of accident from any accident previously evaluated because the scope of a surveillance program does not establish a potential new accident precursor.

(3) involve a significant reduction in a margin of safety because the scope of the proposed inspection assures fire damper integrity while minimizing the exposure of safety-related equipment to potential physical damage due to the inspection process.

Therefore, the staff proposes to determine that the proposed action involves no significant hazards considerations.

On the basis of the above, the Commission has made a proposed determination that the amendment application does not involve a significant hazards consideration.

Local Public Document Room location: Government Publications Section, State Library of Pennsylvania, Education Building, Commonweath and Walnut Streets, Harrisburg, Pennsylvania 17126.

Attorney for Licensee: Troy B. Conner, Jr., 1747 Pennsylvania Avenue, N.W., Washington, D.C. 20006.

NRC Project Director: Daniel R. Muller.

Southern California Edison Company, et al., Docket Nos. 50-361 and 50-362, San Onofre Nuclear Generating Station, Units 2 and 3, San Diego County, California

Date of amendment request: April 19, 1985 and July 1, 1985 (reference PCN-183).

Description of amendment request: The proposed change would revise Technical Specification 3/4.3.3.6 "Accident Monitoring Instrumentation." Technical Specification 3/4.3.3.6 defines types of accident monitoring instrumentation, operability requirements, number of required channels to be operable, actions to be taken in the event that the operability requirements are not met, and periodic surveillance testing to verify operability. The operability of post accident monitoring instrumentation ensures that sufficient information is available on selected plant parameters to monitor and assess these variables following an accident. The proposed change would add an additional type of accident monitoring instrumentation subject to these requirements. Specifically, the proposed change would add the reactor vessel level monitoring system (RVLMS) to the technical specifications. The proposed change reflects the addition of the heated junction thermocouple (HJTC) system-reactor vessel level monitoring system. Two channels are required, one of which must be operable as a minimum. Each channel includes eight sensors in an HJTC probe. A channel is considered to be operable if four or more sensors (one in the reactor vessel upper head region and three sensors in the lower head region) are operable. Should these minimum operability requirements not be met, the proposed change defines actions to be taken. If one channel is inoperable, the proposed change would require that channel to be restored to operable status within seven days if repairs are feasible without shutting down the reactor, or a special report be submitted to the Commission within the following 30 days which outlines the action taken, the cause of the inoperability and the plans and schedule for restoring the system to operable status. If both channels are inoperable, the proposed change will require that one or both of the channels be restored to operable status within 48 hours if repairs are feasible without shutting down the reactor, or that an alternate means of monitoring reactor vessel inventory be initiated, a special report be submitted outlining actions taken, the cause of the inoperability and plans and schedule for restoring the system to operable status, and that both channels be restored to operable status at the next scheduled refueling outage. In addition, to verify operability of the system, the proposed change will require monthly channel checks and channel calibrations to be performed at refueling outage intervals.

Basis for proposed no significant hazards considerations determination: The Commission has provided guidance

concerning the application of standards for determining whether a significant hazards consideration exists by providing certain examples (48 FR 14870) of amendments that are considered not likely to involve significant hazards considerations. Example (ii) relates to a change that constitutes an additional limitation, restriction or control not presently included in the technical specifications; for example, a more stringent surveillance requirement. The proposed change adds new limiting conditions for operation, actions and surveillance requirements for the heated junction thermocouple system-reactor vessel level monitoring system instrumentation. These requirements are not presently included in technical specifications. As such this change constitutes an additional restriction and is therefore similar to example (ii) of 48 FR 14870.

Local Public Document Room Location: General Library, University of California at Irvine, Irvine, California 92713.

Attorney for Licensees: Charles R. Kocher, Esq., Southern California Edison Company, 2244 Walnut Grove Avenue, P.O. Box 800, Rosemead, California 91770 and Orrick, Herrington & Sutcliffe, Attn.: David R. Pigott, Esq., 600 Montgomery Street, San Francisco, California 94111.

NRC Project Director: George W. Knighton.

Southern California Edison Company, et al., Docket Nos. 50-361 and 50-362, San Onofre Nuclear Generating Station, Units 2 and 3, San Diego County, California

Date of amendment request: December 12, 1985 (Reference PCN-212).

Description of amendment request: The proposed change would revise Technical Specification 3/4.7.6 "Snubbers." Technical Specification 3/4.7.6 requires that snubbers be operable to ensure the integrity of safety related systems and specifies the frequency and type of periodic inspections required to verify snubber operability. The proposed change adds additional requirements for visual inspection acceptance criteria and transient event inspections. Currently, surveillance requirement 4.7.6.c, in part, requires that visual inspections verify that attachments to the foundation or supporting structure are secure. The proposed change would revise the visual inspection acceptance criteria to require, in addition, that the fasteners for attachment of the snubber to the component or pipe and the snubber anchorage are also secure.

Surveillance Requirement 4.7.6.j, "Refueling Outage Inspections," requires that during each refueling outage, an inspection be performed of snubbers attached to sections of safety systems and piping that has experienced unexpected potentially damaging transients as determined from a review of operational data and a visual inspection of the system. The proposed change would (1) retitle Surveillance Requirement 4.7.6.j, "Transient Event Inspections," (2) require that inspections be performed on all hydraulic and mechanical snubbers attached to sections of safety systems that have experienced unexpected, potentially damaging transients as determined from a review of operational data and (3) require visual inspection of the systems within six months following a determination that such an event has occurred. This proposed change will also require more frequent reviews of operational data than at the refueling outage interval currently specified.

Basis for proposed no significant hazards consideration determination: The Commission has provided guidance concerning the application of standards for determining whether a significant hazards consideration exists by providing certain examples (48 FR 14870) of amendments that are considered not likely to involve significant hazards considerations. Example (ii) relates to a change that constitutes an additional limitation, restriction, or control not presently included in the technical specifications; for example, a more stringent surveillance requirement. The proposed change described above is similar to this example. The proposed change adds an additional requirement to inspect the fasteners which secure snubbers both to the protected component and the anchorage as is currently specified. The proposed change effectively increases the frequency at which operational data is evaluated to determine if potentially damaging transients have occurred from the refueling outage interval to a maximum of six months. Both of these changes constitute more restrictive surveillance requirements, thus the proposed change is similar to example (ii) of 48 FR 14870.

Local Public Document Room Location: General Library, University of California at Irvine, Irvine, California 92713.

Attorney for Licensees: Charles R. Kocher, Esq., Southern California Edison Company, 2244 Walnut Grove Avenue, P.O. Box 800, Rosemead, California 91770 and Orrick, Herrington & Sutcliffe, Attn.: David R. Pigott, Esq., 600 Montgomery Street, San Francisco, California 94111.

NRC Project Director: George W. Knighton.

Southern California Edison Company, et al., Docket Nos. 50-361 and 50-362, San Onofre Nuclear Generating Station, Units 2 and 3, San Diego County, California

Date of amendment request: February 7, 1986 (Reference PCN-214).

Description of amendment request: The proposed change would revise Technical Specification 3/4.4.7, "Specific Activity," and Technical Specification 6.9.1.5, "Annual Reports." Technical Specification 3/4.4.7 defines allowable limits for concentrations of radioactive isotopes in the reactor coolant system (RCS), specifies a sampling and analysis program to verify RCS activity is within the limits, and defines actions to be taken in the event that RCS activity exceeds the specified limits. When the specified limits are exceeded, Technical Specification 3/4.4.7 allows continued operation for up to 48 continuous hours provided that RCS activity remains within the region of acceptable operation defined by Figure 3.4-1 and provided that the cumulative operating time does not exceed 800 hours in any consecutive 12-month period. In addition, a special report is required if 500 consecutive hours are exceeded in any consecutive six-month period. If the specific activity exceeds the specified limits for more than 48 consecutive hours, a plant shutdown would be required within the next six hours. The actions also require submittal of a licensee event report (LER) within the next 30 days. The LER is to include: (1) reactor power history starting 48 hours prior to the first sample in which the limit was exceeded; (2) fuel burnup by core region; (3) cleanup flow history starting 48 hours prior to the first sample in which the limit was exceeded; (4) history of de-gassing, if any, starting 48 hours prior to the first sample in which the limit was exceeded; and (5) the time duration when the RCS specific activity exceeded one microcurie per gram dose equivalent to iodine-131.

The proposed change would revise existing action requirements to delete the 800 hour per year limit on operation while exceeding the specific activity limit, eliminate the special reporting requirement when 500 hours are exceeded, and remove the requirement for an LER to be submitted within 30 days. Instead of requiring a licensee event report, the proposed change would revise Technical Specification 6.9.1.5 to

include the currently required information in the annual report.

The proposed change also removes redundancy between the existing action and surveillance requirements. In addition to specifying the reporting requirements, the action also specifies performance of the surveillance requirement sampling and analysis program. Performance of the surveillance is required regardless of whether the action is entered or not. Therefore, the proposed change deletes this redundancy from the action.

Basis for proposed no significant hazards considerations determination: The Commission has provided guidance concerning the application of standards for determining whether a significant hazards consideration exists by providing certain examples (48 FR 14870) of amendments that are considered not likely to involve significant hazards considerations. Example (i) relates to a purely administrative change to technical specifications; for example, a change to achieve consistency throughout technical specifications, correction of an error, or a change in nomenclature. Example (vii) relates to a change to make a license conform to changes in the regulations where the license change results in very minor changes to facility operations currently in keeping with the regulations.

10 CFR 50.34 requires technical specifications covering a number of diverse aspects of facility operation. Conformance with the standard technical specifications provides an acceptable means of meeting the requirements of 10 CFR 50.34. NRC Generic Letter 85-19 dated September 27, 1985, revised the standard technical specifications relating to a specific activity. Generic Letter 85-19 incorporates the above proposed change into the standard technical specifications. This change will have a minor impact on facility operation since it only affects reporting requirements and actions to be taken when specific activity limits are exceeded. The specific activity limits are not revised by the proposed change. Because the proposed change has only a minor effect on facility operation and bring the technical specifications in conformance with the standard technical specifications, as revised by Generic Letter 85-19, the proposed change is similar to example (vii). The proposed change would eliminate redundancy between the existing action and surveillance requirements. This change is editorial and does not change existing requirements to perform sampling and analysis in accordance with the surveillance requirements; therefore, this change is similar to example (i). Because the proposed changes are similar to examples (i) and (vii), they do not involve significant hazards considerations.

Local Public Document Room Location: General Library, University of California at Irvine, Irvine, California 92713.

Attorney for Licensees: Charles R. Kocher, Esq., Southern California Edison Company, 2244 Walnut Grove Avenue, P.O. Box 800, Rosemead, California 91770 and Orrick, Herrington & Sutcliffe, Attn.: David R. Pigott, Esq., 600 Montgomery Street, San Francisco, California 94111.

NRC Project Director: George W. Knighton.

Toledo Edison Company and The Cleveland Electric Illuminating Company, Docket No. 50-346, Davis-Besse Nuclear Power Station, Unit No. 1, Ottawa County, Ohio

Date of amendment request: July 26, 1985, as supplemended December 5, 1985.

Description of amendment request: The proposed change revises the Technical Specifications (TSs) that require the Company Nuclear Review Board (CNRB) to report to and advise the President and Chief Operating Officer. Under the proposed change, the CNRB would report to and advise the Senior Vice President, Nuclear. The application also proposes a title change for reporting of the Station Review Board to reflect the present organization.

Basis for proposed no significant hazards consideration determination: The current TSs require that the CNRB report to the President and Chief Operating Officer who in turn reports to the Chairman and Chief Executive Officer. It also provides that the Station Review Board have certain responsibilities to the Vice President, Nuclear. On July 1, 1985, a management organization change occurred at Toledo Edison. A new position of Senior Vice President, Nuclear, was established replacing Vice President, Nuclear. The proposed changes do not change lines of authority but only reflect changes in management structure and titles.

The Commission has provided standards for determining whether a significant hazards consideration exists [10 CFR 50.92(c)]. A proposed amendment to an operating license for a facility involves no significant hazards consideration if operation of the facility in accordance with the proposed amendment would not: (1) Involve a significant increase in the probability or consequences of an accident previously evaluated; or (2) create the possibility of a new or different kind of accident from any accident previously evaluated; or (3) involve a significant reduction in a margin of safety.

As noted previously, the proposed changes do not affect current lines of authority or responsibility but only reflect the changes in organization previously instituted. The licensee concluded that granting of the request would not:

(1) Involve a significant increase in the probability or consequences of an accident previously evaluated. All lines of authority are maintained.

(2) Create the possibility of a new or different kind of accident previously evaluated. All accidents are still bounded by previous analysis and no new accidents are involved.

(3) Involve a significant reduction in a margin of safety. All margins of safety assumed in previous analysis remain unchanged.

The Commission's staff agrees with the licensee's evaluation in this regard, and accordingly, the staff proposes to find that these changes involve no significant hazards considerations.

Local Public Document Room location: University of Toledo Library, Documents Department, 2801 Bancroft Avenue, Toledo, Ohio 43606.

Attorney for licensee: Gerald Charnoff, Esq., Shaw, Pittman, Potts and Trowbridge, 1800 M Street, N.W., Washington, D.C. 20036.

NRC Project Director: John F. Stolz.

Vermont Yankee Nuclear Power Corporation, Docket No. 50-271, Vermont Yankee Nuclear Power Station, Vernon, Vermont

Date of application for amendment: March 12, March 27, 1986 and May 9, 1986.

Description of amendment request: By letters dated March 12, March 27 and May 9, 1986, the licensee, Vermont Yankee Nuclear Power Corporation (VYNPC), submitted a proposed license amendment for NRC review and approval which would revise the Vermont Yankee Technical Specifications (TS) to (1) permit reactor operation with one recirculation loop out of service, (2) to include General Electric Company's (GE) Service Information Letter (SIL) 380, Revision 1 recommendations regarding thermal-hydraulic stability for dual loop and single operations, and (3) to incorporate administrative changes dealing with page continuity and correction of an error in the value of the break area

assured in ECCS analysis. Presently the VYNPC operating license requires a unit to be in cold shutdown within the succeeding 24 hours if an idle recirculation loop can not be returned to service within 24 hours. The licensee previously requested authorization for unlimited single loop operation of Vermont Yankee. Subsequently, Tennessee Valley Authority's operation of Browns Ferry Unit 1 (a boiling water reactor similar in design to VYNPC in the single loop mode of operation at 59% power lead to concerns related to thermal-hydraulic instability. GE, in SIL #380, Revision 1, addressed these concerns by providing the boiling water reactor licensee's generic guidance to obviate thermal-hydraulic stability induced neutron flux oscillations. The licensee has proposed TS in accordance with the guidance provided by GE in SIL-380, Revision 1.

Specifically, the proposed changes requested by the licensee consist of (1) deletion of the license condition restricting the single loop operation and, for single and dual loop operation, incorporating requirements in the TS to detect thermal-hydraulic instabilities induced by neutron oscillations and specifying operator response to the detected instabilities, (2) revision of the TS to provide Average Power Range Monitor (APRM) flux scram trip and rod block settings, and increase in the safety limit Minimum Critical Power Ratio (MCPR) value, and a revision to the allowable Average Planar Linear Heat Generation Rate (APLHGR) values, and (3) editorial revisions and correction of a typographical error.

Basis for proposed no significant hazards consideration determination: The Commission has provided standards (10 CFR 50.92(c)) for determining whether a significant hazards consideration exists. A proposed amendment to an operating license for a facility involves no significant hazards consideration if operation of the facility in accordance with the proposed amendment would not (1) involve a significant increase in the probability or consequences of an accident previously evaluated; or (2) create the possibility of a new or different kind of accident from any accident previously evaluated; or (3) involve a significant reduction in a margin of safety.

We have evaluated the licensee's request for the proposed TS for compliance with the above cited standards.

(1) Consideration of probability and consequences of accidents. Our evaluation of the proposed changes indicated that the principal accident associated with a single recirculation loop operating would be an inadvertent startup of the idle recirculation loop pump causing a transient. However, such a transient was evaluated in the Vermont Yankee Final Safety Analysis Report (FSAR) and found to satisfy the Commission's regulations. In addition the licensee has proposed more restrictive TS changes related to MCPR limits, flow-biased scram and rod block setpoints, and reduced MAPLHGR operating limits, to ensure that the probabilities and the consequences of accidents with single recirculation loop operation will not be significantly increased. We have also evaluated the inplication of thermal-hydraulic stability for both single dual loop operations after the licensee's proposed TS changes based on the GE recommendations in SIL 380, Revision 1 are incorporated. Our evaluation shows that the proposed changes would alleviate the concerns related to the thermal-hydraulic instability by adding surveillance requirements for detecting thermal-hydraulic instabilities and specifying the remedial operator actions for responding to them. Such operator actions will also assure that there will be no significant increase in the probability or consequences of an accident. Based on the above discussion, we find that the proposed changes are not expected to significantly increase the probability or consequences or previously evaluated accidents.

(2) Consideration of possibility of a new or different kind of accident. The Vermont Yankee operation with one recirculation loop is not expected to create the possibility of a new or different kind of accident from any previously analyzed, as all abnormal operating transients which could be initiated with single loop operation, such as an inadvertent startup of and idle recirculation pump or pump trip have already been analyzed in the FSAR, and reviewed and accepted by the staff.

For single and dual loop operation, the addition of the surveillance requirements and remedial actions for thermal-hydraulic instability detection and response involve normal plant operating practices and, therefore, are not expected to create a new or different kind of accident from any previously analyzed in the FSAR.

(3) Consideration of reduction in a margin of safety.

The licensee has proposed the revised operating limits, setpoints, and procedures for the proposed single and dual loop operation. Our evaluation of the licensee's proposal indicates that the proposed changes will ensure that the FSAR margins of safety will not be reduced during normal operation and with one recirculation pump not operating. Our conclusions are based on our review of the evaluations by GE in support of the Vermont Yankee operation presented in the GE report NEDO-30060.

For single and dual loop operation, the additional surveillance requirements and remedial actions required of the operator for detection of and response to thermal-hydraulic instability will increase the present margin of safety.

The editorial changes and typographical correction entail administrative changes and clearly satisfy the Commission standards for a "no significant hazards involved" finding.

Based on the above considerations the staff concludes that the proposed amendment meets the Commission's standards 10 CFR 50.92(c).

Therefore, the staff has made a proposed determination that the application involves no significant hazards consideration.

Local Public Document Room location: Brooks Memorial Library, 224 Main Street, Brattleboro, Vermont 05301.

Attoney for licensee: John A. Ritscher, Esquire, Ropes and Gray, 225 Franklin Street, Boston, Massachusetts 02110.

NRC Project Director: Daniel R. Muller.

Wisconsin Electric Power Company, Docket Nos. 50-266 and 50-301 Point Beach Nuclear Plants, Unit Nos. 1 and 2, Town of Two Creeks, Manitowoc County, Wisconsin

Date of amendments request: March 5, 1986.

Description of amendments request: The proposed amendments revise the Technical Specifications to change the reporting requirements for primary coolant iodine spikes from a short-term report (Special Report) to an item to be included in the Annual Results and Data Report. The proposed amendments would also delete the requirement to shut down the reactor immediately in reactor coolant activity exceeds 1.0 microcuries per gram Dose Equivalent I-131 (but is within the allowable limits of figure 15.3.1-5) and has exceeded 800 hours cumulative operating time in this condition during any consecutive 12 month period. The requirement to shut down the reactor after primary coolant activity exceeds 1.0 microcuries per gram Dose Equivalent I-131 (but is within the allowable limit) for greater than 48 hours and the requirement to shut down the reactor if primary coolant activity exceeds the allowable limit of figure 15.3.1-5 are still retained.

Basis for proposed no significant hazards consideration determination: The proposed amendments involve no significant hazards consideration if operation of the facility in accordance with the amendments would not: (1) Involve a significant increase in the probability or consequence of an accident previously evaluated, (2) create the possibility of a new or different kind of accident from any accident previously evaluated, or (3) involve a significant reduction in a margin of safety. These amendments involve: (1) a change in reporting requirements and (2) a deletion of a requirement to shut down a plant when iodine limits are exceeded over a long term. The first change is purely administrative and does not meet the criteria of 10 50.92 as posing a significant hazards consideration. The second change involving deletion of the 800-hour shutdown requirement was previously evaluated on a generic basis by the NRC and the results were published on September 27, 1985 in Generic Letter 85-19 to all licensees. The staff determined that the 800-hour limit was no longer necessary because the improved quality of nuclear fuel coupled with existing reporting requirements should preclude licensees ever approaching the limit. Short term shutdown requirements for iodine coolant activity levels remain unaffected by the staff's determination. The deletion of the 800-hour cumulative shutdown limit would not involve a significant increase in the probability or consequences of an accident previously evaluated nor create the possibility of a new or different kind of accident from any accident previously evaluated nor would it involve a significant reduction in a margin of safety. Therefore, the staff proposes to determine that the amendments do not involve a significant hazards consideration.

Local Public Document Room location: Joseph P. Mann Library, 1516 Sixteenth Street, Two Rivers, Wisconsin.

Attorney for licensee: Gerald Charnoff, Esq., Shaw, Pittman, Potts and Trowbridge, 1800 M Street, N.W., Washington, DC 20036.

NRC Project Director: George E. Lear.

Wisconsin Electric Power Company, Docket Nos. 50-266 and 50-301 Point Beach Nuclear Plants, Unit Nos. 1 and 2, Town of Two Creeks, Manitowoc County, Wisconsin

Date of amendments request: April 10, 1986.

Description of amendments request: The amendments revise the Technical Specifications concerning retention periods of plant operating records. They also revise plant organization charts to reflect changes in personnel, correct administrative and spelling errors or otherwise provide clarification for existing Technical Specifications and add two recordkeeping requirements.

Basis for proposed no significant hazards consideration determination: The Commission has provided standards for determining whether actions involve significant hazards consideration by providing certain examples (48 FR 14870). One of the examples of actions not likely to involve a significant hazards consideration is example (i) a purely administrative change to the technical specifications: for example a change to achieve consistency throughout the technical specifications, correction of an error, or a change in nomenclature. The staff has reviewed the proposed Technical Specifications and determined that they are all purely administrative changes.

Therefore, the staff proposes to determine that the amendments involve no significant hazards consideration.

Local Public Document Room location: Joseph P. Mann Library, 1516 Sixteenth Street, Two Rivers, Wisconsin.

Attorney for licensee: Gerald Charnoff, Esquire, Shaw, Pittman, Potts and Trowbridge, 1800 M Street, N.W., Washington, DC 20036.

NRC Project Director: George E. Lear.

Wisconsin Electric Power Company, Docket Nos. 50-266 and 50-301 Point Beach Nuclear Plants, Unit Nos. 1 and 2, Town of Two Creeks, Manitowoc County, Wisconsin

Date of amendments request: May 8, 1986.

Description of amendments request: The proposed amendments revise the Technical Specifications to allow a component cooling water (CCW) heat exchanger to be out-of-service for up to five days while installing an additional CCW heat exchanger during the period from July to September 1986.

Basis for proposed no significant hazards consideration determination: 10 CFR 50.92 states that a proposed amendment to an operating license for a facility involves no significant hazards consideration if operation of the facility in accordance with the proposed amendment would not: (1) involve a significant increase in the probability or consequences of an accident previously evaluated, or (2) create the possibility of a new or different kind of accident from any accident previously evaluated, or (3) involve a significant reduction in a margin of safety.

The proposed amendments permit a temporary extension of an out-of-service condition already permitted by the existing Technical Specifications. Accordingly, this action does not create the possibility of a new or different kind of accident from any accident previously evaluated, nor does it involve a reduction in the margin of safety already provided by the system. The CCW system for both units will remain in service at all times. It is only the capability to utilize the swing heat exchanger which will be temporarily unavailable. This condition is already permitted by the limiting conditions for operation. This change will extend this time period from a maximum of forty-eight hours, or two days, to five days.

The third criteria of 10 CFR 50.92 concerns the potential that the change involves a significant increase in the probability or consequences of an accident previously analyzed. Removing a standby component from service does not increase the probability of an accident. This probability remains a function of the collective failure frequencies of the system components and is not influenced by the probability of availability of standby component. This premise is recognized in the existing limiting condition for operation in several specifications which permits standby components to be removed from service temporarily for inspection or maintenance. The consequences of an accident could potentially be influenced by the amount of time a standby component is permitted to be out of service. In this situation, a failure of the in-service CCW heat exchanger at the same time the standby heat exchanger is removed from service precludes the ability to switch to the standby heat exchanger. This means that the affected unity would have to be shut down and placed in hot standby. Continued availability of the CCW system for that unit would not be needed since decay heat could be removed by means of the steam generators. There would, therefore, be no significant increase in potential off-site or on-site radiological consequences.

Based on the above, that staff proposes to determine that the amendments do not involve a significant hazards consideration. *Local Public Document Room location:* Joseph P. Mann Library, 1516 Sixteenth Street, Two Rivers, Wisconsin.

Attorney for licensee: Gerald Charnoff, Esq., Shaw, Pittman, Potts and Trowbridge, 1800 M Street, N.W., Washington, DC 20036.

NRC Project Director: George E. Lear.

Wisconsin Public Service Corporation, Docket No. 50-305, Kewaunee Nuclear Power Plant, Kewaunee County, Wisconsin

Date of amendment request: April 18, 1986.

Description of amendment request: The NRC Generic Letter 85-09 dated May 23, 1985, requested licensees to submit Technical Specifications (TS) to explicitly require independent testing of the reactor trip breaker undervoltage and shunt trip attachments during power operation and independent testing of the control room manual reactor trip switch contacts during each refueling outage. The licensee's submittal meets the intent of our Generic Letter 85-09.

Basis for proposed no significant hazards consideration determination: This change does not involve a significant hazards consideration because operation of the Kewaunee Nuclear Plant in accordance with this change would not:

1. Involve a significant increase in the probability or consequences of an accident previously evaluated. This change provides for a more stringent shutdown requirement than currently in the KNPP Technical Specification. That is, if a reactor trip breaker cannot be replaced or restored to an operable status after 72 hours, the plant would be required to preceed to the hot shutdown condition. The KNPP Technical Specification currently allows a significantly longer time period. Therefore, this change does not increase the probability or consequences of an accident.

2. Create the possibility of a new or different kind of accident from previously analyzed. This request is more restrictive than current requirements. Therefore, this change is bounded by current analysis and does not create the possibility of a new or different kind of accident.

3. Involve a significant reduction in a margin of safety. Existing technical specifications for a reactor trip breaker being out of service were not explicit; however, a 37-day maximum was implicit. This submittal provides technical specifications as requested in Generic Letter 85-09. They are more restrictive and explicit than the current technical specifications and hence do not cause a reduction in the margin of safety.

This change is also similar to an example from the supplementary information of 10 CFR Part 2 section C.2.E. item (ii) as stated below:

(ii) A change that constitutes an additional limitation, restriction, or control not presently included in the technical specifications, e.g., a more stringent surveillance requirement.

Therefore, based on the above, we conclude that the proposed changes are consistent with the Commission's criteria for determining whether a proposed amendment to an operating license involves no significant hazards consideration, 10 CFR 50.92 (48 FR 14871). The proposed revisions to the Technical Specifications will not involve a significant increase in the probability or consequences of an accident previously evaluated; or create the possibility of a new or different kind of accident previously evaluated; or involve a significant reduction in margin of safety. In addition, the application for amendment involves a proposed change that is similar to an example for which a no significant hazards consideration exists. The Commission proposes to determine that the proposed amendment involves no significant hazards consideration.

Local Public Document Room location: University of Wisconsin Library Learning Center, 2420 Nicollet Drive, Green Bay, Wisconsin 54301.

Attorney for licensee: Steven E. Keane, Esquire, Foley and Lardner, 777 E. Wisconsin Avenue Milwaukee, Wisconsin 53202.

NRC Project Directorate: George E. Lear.

PREVIOUSLY PUBLISHED NOTICES OF CONSIDERATION OF ISSUANCE OF AMENDMENTS TO OPERATING LICENSES AND PROPOSED NO SIGNIFICANT HAZARDS CONSIDERATION DETERMINATION, AND OPPORTUNITY FOR HEARING

The following notice were previously published as separate individual notices. The notice content was the same as above. They were published as individual notices because time did not allow the Commission to wait for this bi-weekly notice. They are repeated here because the bi-weekly notice lists all amendments proposed to be issue involving no significant hazards consideration.

For details, see the individual notice in the **Federal Register** on the day and page cited. This notice does not extend the notice period of the original notice.

Pacific Gas and Electric Company, Docket Nos. 50-275 and 50-323, Diablo Canyon Nuclear Power Plant, Unit Nos. 1 and 2, San Luis Obispo County, California

Date of amendments request: October 30, 1985.

Brief description of amendments: The requested amendments proposed to change the combined Technical Specification for both Units (1) to increase the fuel storage capacity in each of the two spent fuel pools from the current 270 fuel assemblies to 1324 assemblies by installing high density fuel racks, (2) to specify the combination of initial enrichment and cumulative burnup for fuel assemblies stored in the pool, (3) to require a boron concentration of 2000 ppm in the pool, and (4) to limit the movement of a spent fuel cask in the fuel handling building.

Date of publication of individual notice in Federal Register: January 13, 1986 (51 FR 1451).

Expiration date of individual notice: February 12, 1986.

Local Public Document Room location: California Polytechnic State University Library, Document and Maps Departments, San Luis Obispo, California 93407.

NOTICE OF ISSUANCE OF AMENDMENT TO FACILITY OPERATING LICENSE

During the period since publication of the last bi-weekly notice, the Commission has issued the following amendments. The Commission has determined for each of these amendments that the application complies with the standards and requirements of the Atomic Energy Act of 1954, as amended (the Act), and the Commission's rules and regulations. The Commission has made appropriate findings as required by the Act and the Commission's rules and regulations in 10 CFR Chapter I, which are set forth in the license amendment.

Notice of Consideration of Issuance of Amendment to Facility Operating License and Proposed No Significant Hazards Consideration Determination and Opportunity for Hearing in connection with these actions was published in the **Federal Register** as indicated. No request for a hearing or petition for leave to intervene was filed following this notice.

Unless otherwise indicated, the Commission has determined that these amendments satisfy the criteria for categorical exclusion in accordance with 10 CFR 51.22. Therefore, pursuant to 10 CFR 51.22(b), no environmental impact statement or environmental assessment need be prepared for these amendments. If the Commission has prepared an environmental assessment under the special circumstances provision in 10 CFR 51.12(b) and has made a determination based on that assessment, it is so indicated

For further details with respect to the action see (1) the applications for amendments, (2) the amendments, and

(3) the Commission's related letters, Safety Evaluations and/or Environmental Assessments as indicated. All of these items are available for public inspection at the Commission's Public Document Room, 1717 H Street NW., Washington, D.C., and at the local public document rooms for the particular facilities involved. A copy of items (2) and (3) may be obtained upon request addressed to the U.S. Nuclear Regulatory Commission, Washington, D. C. 20555, Attention: Director, Division of Licensing.

Arkansas Power & Light Company, Docket No. 50-368, Arkansas Nuclear One, Unit 2, Pope County, Arkansas

Date of application for amendment: January 24, 1986.

Brief description of amendment: The amendment revised the Technical Specifications of delete the tubular listing of snubbers in accordance with the NRC staff guidance contained in Generic Letter 84-13.

Date of Issuance: May 5, 1986.

Effective Date: May 5, 1986.

Amendment No.: 72

Facility Operating License No. NPF-6: Amendment revised the Technical Specifications.

Date of Initial Notice in Federal Register: March 12, 1986 (51 FR 8586). The Commission's related evaluation of the amendment is contained in a Safety Evaluation dated May 5, 1986.

No significant hazards consideration comments received: No.

Local Public Document Room Location: Tomlinson Library, Arkansas Tech University, Russellville, Arkansas 72801.

Carolina Power & Light Company, Docket No. 50-324, Brunswick Steam Electric Plant, Unit, 2, Brunswick County, North Carolina

Date of application for amendment: December 20, 1985, as supplemented March 28, 1986.

Brief description of amendment: The amendment changes Technical Specifications (TS) by modifying the minimum critical power ration (MCPR) values and deleting references to 8x8 fuel type to support operation of Unit 2 in Fuel Cycle 7.

Date of issuance: April 30, 1986.

Effective date: April 30, 1986.

Amendment No.: 123.

Facility Operating License No. DPR-62. Amendment revised the Technical Specifications.

Date initial notice in Federal Register: March 26, 1986 (51 FR 10453).

The subsequent submittal dated March 28, 1986, provided clarifying information, which is no way affects the content of the initial notice. The Commission's related evaluation of the amendment is contained in a Safety Evaluation dated April 30, 1986.

No significant hazards consideration comments received: No.

Local Public Document Room location: Southport, Brunswick County Library, 109 W. Moore Street, Southport, North Carolina 28461.

Carolina Power & Light Company, Docket No. 50-324, Brunswick Steam Electric Plant, Unit 2, Brunswick County, North Carolina

Date of application for amendment: December 20, 1985.

Brief description of amendment: The amendment changes Technical Specification Tables 3.3.3-1, 3.3.3-2, and 4.3.3-1 to reflect modifications to the Automatic Depressurization System (ADS) by removing the high pressure trip from the logic sequence and adding a manual inhibit switch thus eliminating the need for manual actuation to ensure core coverage.

Date of issuance: April 30, 1986.

Effective date: April 30, 1986.

Amendment No.: 124

Facility Operating License No. DPR-62. Amendment revised the Technical Specifications.

Date of initial notice in Federal Register: February 12, 1986 (51 FR 5272).

The Commission's related evaluation of the amendment is contained in a Safety Evaluation dated April 30, 1986.

No significant hazards consideration comments received: No.

Local Public Document Room location: Southport, Brunswick County Library, 109 W. Moore Street, Southport, North Carolina 28461.

Carolina Power & Light Company, Docket No. 50-324, Brunswick Steam Electric Plant, Unit 2, Brunswick County, North Carolina

Date of application for amendment: January 27, 1986.

Brief description of amendment: The amendment changes Technical Specifications (TS) to revise the TS Table 3.6.3-1 to reflect modifications being made during the current refueling outage to provide a dedicated purge system for post-accident combustible gas control.

Date of issuance: May 5, 1986.

Effective date: May 5, 1986.

Amendment No.: 125

Facility Operating License No. DPR-62. Amendment revised the Technical Specifications.

Date of initial notice in Federal Register: March 26, 1986 (51 FR 10454).

The Commission's related evaluation of the amendment is contained in a Safety Evaluation dated May 5, 1986.

No significant hazards consideration comments received: No.

Local Public Document Room location: Southport, Brunswick County Library, 109 W. Moore Street, Southport, North Carolina 28461.

Carolina Power & Light Company, Docket No. 50-261, H. B. Robinson Steam Electric Plant, Unit No. 2, Darlington County, South Carolina

Date of application for amendment: August 28, 1985, as supplemented November 11, 1985.

Brief description of amendment: The amendment would add minimum RCS flow to Section 2.1 Bases and Figures 2.1-1 of the Technical Specifications.

Date of issuance: May 6, 1986.

Effective date: May 6, 1986.

Amendment No.: 98

Facility Operating License No. DPR-23. Amendment revised the Technical Specifications.

Date of initial notice in Federal Register: January 15, 1986 (51 FR 1873) The Commission's related evaluation of the amendment is contained in a Safety Evaluation dated May 6, 1986.

No significant hazards consideration comment received: No.

Local Public Document Room location: Hartsville Memorial Library, Home and Fifth Avenues, Hartsville, South Carolina 29535.

Commonwealth Edison Company, Docket Nos. 50-373, and 50-374, La Salle County Station, Units 1 and 2, La Salle County, Illinois

Dates of application for amendment: August 27, 1985, and April 4, 1985.

Brief description of amendment: The proposed amendment to Operating License NPF-11 and Operating License NPF-18 revise the La Salle Units 1 and 2 Technical Specifications to remove the upper limit on the accumulator setpoint from 940 psig+30,−0 psig to greater than or equal to 940 psig. The licensee withdrew its request to amend Technical Specification 3.1.3.5 to address inoperable pressure and level detectors associated with scram accumulators in its letter of April 4, 1986.

Date of issuance: May 6, 1986.

Effective date: May 6, 1986.

Amendment Nos: 39 and 21.

Facility Operating License No. NPF-11 and NPF-18. Amendment revised the Technical Specifications.

Date of initial notice in Federal Register: October 9, 1985 (50 FR 41245).

The Commission's related evaluation of the amendments is contained in a Safety Evaluation dated May 6, 1986.

No significant hazards consideration comments received: No.

Local Public Document Room location: Public Library of Illinois Valley Community College, Rural Route No. 1, Oglesby, Illinois 61348.

Commonwealth Edison Company, Docket No. 50-373, La Salle County Station, Unit 1, La Salle County, Illinois

Date of application for amendment: October 22, 1985, as supplemented on March 21, 1986.

Brief description of amendment: The amendment revises the La Salle Unit 1 Technical Specifications to support the operation of La Salle County Station, Unit 1 at full rated power during the upcoming Cycle 2 operation. The amendment to support this reload changes the Technical Specifications in the following areas: (1) Establishes operating limits for all fuel types for the upcoming Cycle 2 operation; (2) establishes new safety limit minimum critical power ratio value; (3) establishes a new maximum average planar linear heat generation rate curve for the new fuel; (4) reflects the placement of approximately 30 percent of the core with new General Electric (GE) prepressurized barrier assemblies for the upcoming Cycle 2 operation; (5) modifies the bases to account for the use of the new GE fuel assemblies; and (6) addresses the area of thermal hydraulic stability for single loop operations.

This reload will consist of 764 fuel assemblies, 532 of which are once burned non-pressurized GE fuel assemblies and 232 of which are new GE prepressurized barrier fuel assemblies. This new fuel bundle design has been approved by the staff; however, a new enrichment is being used in the fuel assemblies for the La Salle Unit 1 reload. This new enrichment has been recently addressed in Amendment 13 in the GE Report, NEDE-24011-A-7, August 1985, "General Electric Standard Application for Reactor Fuel," (GESTAR II). This amendment is in the final processing of review, and the conclusion is that this new fuel enrichment is acceptable.

Thus, this core reload involves the use of fuel assemblies that are not significantly different from those found acceptable to the Commission. The proposed changes to the Technical Specifications reflect new operating limits associated with new fuel to be inserted into the core, are based on new core physics analyses, address the stability of single-loop operation and are within the acceptance criteria.

Date of issuance: May 9, 1986.

Effective date: Upon startup following the first refueling outage.

Amendment No: 40.

Facility Operating License No. NPF-11. Amendment revised the Technical Specifications.

Date of initial notice in Federal Register: November 20, 1985 (50 FR 47859) and April 9, 1986 (51 FR 12225).

The Commission's related evaluation of the amendment is contained in a Safety Evaluation dated May 9, 1986.

No significant hazards consideration comments received: No.

Local Public Document Room location: Public Library of Illinois Valley Community College, Rural Route No. 1, Oglesby, Illinois 61348.

Commonwealth Edison Company, Docket Nos. 50-373 and 50-374, La Salle County Station, Units 1 and 2, La Salle County, Illinois

Dates of amendment requests: November 13, 1985, as supplemented by letters dated January 3 and March 10, 1986.

Brief description of amendments: The amendments to Operating License NPF-11 and Operating License NPF-18 reflect a low and/or degraded grid voltage modification as required by License Condition 2.C.(20) for Unit 1 and License Condition 2.C.(11) for Unit 2. Modifications to all three electrical divisions of Unit 1 will be completed during the present first refueling outage, and modifications to two out of the three divisions have been completed for Unit 2. The third division will be modified prior to startup after the first Unit 2 refueling as required by License Condition 2.C.(11). The amendments incorporate changes to the La Salle Units 1 and 2 Technical Specifications to reflect the low and/or degreded grid voltage modifications. An action statement, Action 39, requested by the licensee to allow seven days of plant operation without automatic degraded voltage protection on an engineered safety feature bus was withdrawn by letter dated March 10, 1986, and changed to Action 37 which requires the inoperable instrument to be placed in the tripped condition within 1 hour or the associated emergency diesel generator to be declared inoperable and actions required by Technical Specifications 3.8.1.1 or 3.8.1.2 to be undertaken.

Date of issuance: May 9, 1986.

Effective date: For Unit 1 upon startup following the first Unit 1 refueling outage and for Unit 2 upon date of issuance.

Amendment Nos: 41 and 22.

Facility Operating License Nos. NPF-11 AND NPF-18. Amendments revised the Technical Specifications.

Date of initial notices in Federal Register: December 4, 1985 (50 FR 49784) and April 9, 1986 (51 FR 12226).

The Commission's related evaluation of the amendment is contained in a Safety Evaluation dated May 9, 1986.

No significant hazards consideration comments received: No.

Local Public Document Room location: Public Library of Illinois Valley Community College, Rural Route No. 1, Oglesby, Illinois 61346.

Commonwealth Edison Company, Docket Nos. 50-373 and 50-374, La Salle County Station, Units 1 and 2, La Salle County, Illinois

Date of amendments request: March 21, 1986.

Brief description of amendments: The amendments to Operating License NPF.11 and Operating License NPF-18 revise the La Salle Units 1 and 2 Technical Specifications to reflect the addition of backup overload protection devices required to satisfy License Condition 2.C.(23) for Unit 1. For Unit 2, these devices are installed and are being added to the Techncial Specifications.

Date of issuance: May 9, 1986.

Effective date: For Unit 1, upon startup following the first refueling; and for Unit 2, upon date of issuance.

Amendment Nos.: 42 and 23.

Facility Operating License Nos. NPF-11 and NPF-18. Amendments revised the Technical Specifications.

Date of initial notice in Federal Register: April 9, 1986 (51 FR 12227) The Commission's related evaluation of the amendments is contained in a Safety Evaluation dated May 9, 1986.

No significant hazards consideration comments received: No.

Local Public Document Room location: Public Library of Illinois Valley Community College, Rural Route No. 1, Oglesby, Illinois 6348.

Connecticut Yankee Atomic Power Company, Docket No. 50-213, Haddam Neck Plant, Middlesex county, Connecticut

Date of appliction for amendment: February 21, 1986.

Brief description of amendment: The license amendment incorporates into the Haddam Neck Plant technical specifications three new fire protection systems, which are required to protect safe shut down equipment. These fire protection systems include the directional spray water suppression system in the cable-spreading area hallway, the water curtain-type spray

system in the area of the service water pumps and two early warning fire detectors in the auxiliary feedwater pump room.

Date of issuance: April 29, 1986.

Effective date: April 29, 1968.

Amendment No. 75.

Facility Operating License No. DPR-61. Amendment revised the technical specifications.

Date of initial notice in Federal Register: March 26, 1986 (51 FR 10455).

The Commission's related evaluation of the amendment is contained in a Safety Evaluation dated April 29, 1986.

No significant hazards consideration comments received: No.

Local Public Document Room location: Russell Library, 1214 Broad Street, Middletown, Connecticut 06457.

Consumers Power Company, Docket No. 50-155, Big Rock Point Plant, Charlevoix County, Michigan

Date of application for amendment: April 15, 1985.

Brief description of amendment: The amendment adds a new condition to the Control Rod Drive surveillance testing to require all testing prior to startup following an outage greater than 120 days.

Date of issuance: May 6, 1986.

Effective date: May 6, 1986.

Amendment No. 84.

Facility Operating License No. DPR-6. This amendment revised the Technical Specifications.

Date of initial notice in Federal Register: May 21, 1985 (50 FR 20974).

The Commission's related evaluation of the amendment is contained in Safety Evaluation dated May, 6, 1986.

No significant hazards consideration comments received: No.

Local Public Document Room location: North Central Michigan College, 1515 Howard Street, Petoskey, Michigan 49770.

Duke Power Company, et al., Docket No. 50-413, Catawba Nuclear Station, Unit 1, York County, South Carolina

Date of application for amendment: February 12, 1986, as supplemented March 3, 4, 11, and 26, and April 9, 1986.

Brief description of amendment: The amendment changes the Technical Specifications to extend, on a one-time basis, by a maximum of five months those 18-month surveillances associated with the Engineered Safety Features which can only be conducted with Unit 1 in cold shutdown or refueling.

Date of issuance: April 24, 1986.

Effective date: April 24, 1986.

Amendment No.: 7.

Facility Operating License No. NPF-35: Amendment revised the Technical Specifications.

Date of initial notice in Federal Register: March 21, 1986 (51 FR 9905)

The Commission's related evaluation of the amendments is contained in a Safety Evaluation dated April 24, 1986.

No significant hazards consideration comments received: No.

Local Public Document Room location: York County Library, 138 East Black Street, Rock Hill, South Carolina 29730.

Duke Power Company, Docket Nos. 50-369 and 50-370, McGuire Nuclear Station, Units 1 and 2, Mecklingburg County, North Carolina

Dates of applications for amendments: January 10, 1986, and September 6, 1985.

Brief description of amendments: The amendments change the Technical Specifications to increase by one the number of operable and operating reactor coolant loops for operation in the hot standby mode, correct the Containment Pressure Control System (CPS) logic, and clarify the CPCS setpoints and allowable values and applicable Table headings.

Date of issuance: April 28, 1986

Effective date: April 28, 1986.

Amendment Nos. 56 and 37.

Facility Operating License Nos. NPF-9 and NPF-17. Amendments revised the Techncial Specifications.

Dates of initial notices in Federal Register: February 26, 1986 (51 FR 6822) and March 26, 1986 (51 FR 10457).

The Commission's related evaluation of the amendment is contained in Safety Evaluation dated April 8, 1986.

No significant hazards consideration comments received: No

Local Public Document Room location: Atkins Library, University of North Carolina, Charlotte (UNCC Station), North Carolina, 28223.

Florida Power Corporation, et al., Docket No. 50-302, Crystal River Unit No. 3 Nuclear Generating Plant, Citrus County, Florida

Date of application for amendment: January 16, 1986.

Brief description of amendment: Removes the tabular list of hydraulic snubbers from the Technical Specifications.

Date of issuance: May 1, 1986.

Effective date: May 1, 1986.

Amendment No.: 88.

Facility Operating License No. DPR-72. Amendment revised the Technical Specifications.

Date of initial notice in Federal Register: February 26, 1986 (51 FR 6822), as corrected March 6, 1986 (51 FR 7861).

The Commission's related evaluation of the amendment is contained in a Safety Evaluation dated May 1, 1986.

No significant hazards consideration comments received: No.

Local Public Document Room Location: Crystal River Public Library, 668 N.W. First Avenue, Crystal River, Florida 32629.

Florida Power and Light Company, et al., Docket No. 50-389, St. Lucie Plant, Unit No. 2, St. Lucie County, Florida

Date of application for amendment: December 30, 1985 as supplemented March 17, 1986.

Brief description of amendment: This amendment changes the Moderator Temperature Coefficient from 0.0×10^{-4} delta p/°F to $+0.3 \times 10^{-4}$ delta p/°F above 70% power to provide more operating flexibility and remove restrictive operational requirements.

Date of issuance: April 29, 1986.

Effective date: April 29, 1986.

Amendment No.: 14.

Facility Operating License No. NPF-16: Amendment revised the Technical Specifications.

Date of initial notice in Federal Register: March 26, 1986 (51 FR 10451 at 10459).

The Commission's related evaluation of the amendment is contained in a Safety Evaluation dated April 29, 1986.

No significant hazards consideration comments received: No.

Local Public Document Room Location: Indian River Junior College Library, 3209 Virginia Avenue, Ft. Pierce, Florida 33450.

Florida Power and Light Company, Docket Nos. 50-250 and 50-241, Turkey Point Plant Units 3 and 4, Dade County, Florida

Date of application for amendments: November 21, 1985.

Brief description of amendments: These amendments revise the Technical Specification (TS) relating to snubbers. The list of snubbers has been deleted in accordance with the guidance provided in Generic Letter 84-13, "Technical Specifications for Snubbers." The TS has also been changed to modify the existing testing requirements for safety-related snubbers to define the snubber type, delete the test acceptance criteria regarding a 50% drag force increase, and add additional acceptance criteria for visual inspection and additional requirements for an engineering evaluation of functional test failures.

Date of issuance: May 6, 1986.

Effective date: May 6, 1986.
Amendment Nos.: 116 and 110.
Facility Operating License No. DPR-31 and DPR-41: Amendments revised the Technical Specifications.
Date of initial notice in Federal Register: March 12, 1986 (51 FR 8590).
The Commission's related evaluation of the amendments is contained in a Safety Evaluation dated May 6, 1986.
No significant hazards consideration comments received: No.
Local Public Document Room Location: Environmental and Urban Affairs Library, Florida International University, Miami, Florida 33199.

GPU Nuclear Corporation, et al., Docket No. 50-289, Three Mile Island Nuclear Station, Unit No. 1, Dauphin County, Pennsylvania

Date of application for amendment: January 3, 1986, as supplemented January 31, 1986.
Brief description of amendment: This amendment replaces the requirement to submit a Special Report when Dose Equivalent I-131 is above a specified limit with a requirement to provide more detail in an Annual Report. It also deletes the requirement to immediately shut down the plant if Dose Equivalent I-131 exceeds a specified limit for more than 800 hours in a 12-month period.
Date of issuance: May 6, 1986.
Effective date: May 6, 1986.
Amendment No.: 117.
Facility Operating License No. DPR-50: Amendment revised the Technical Specifications.
Date of initial notice in Federal Register: March 12, 1986 (51 FR 8592).
The Commission's related evaluation of the amendment is contained in a Safety Evaluation dated May 6, 1986.
No significant hazards consideration comments received: No.
Local Public Document Room Location: Government Publications Section, State Library of Pennsylvania, Education Building, Commonwealth and Walnut Streets, Harrisburg, Pennsylvania 17126.

Mississippi Power & Light Company, Middle South Energy, Inc., and South Mississippi Electric Power Association, Docket No. 50-416, Grand Gulf Nuclear Station, Unit 1, Claiborne County, Mississippi

Date of application for amendment: November 1, 1985, as supplemented December 10 and 27, 1985, and January 24, and February 23, 1986.
Brief description of amendment: The amendment changes License Condition 2.C.(26) by increasing the interval for inspection of the low pressure turbine discs.
Date of issuance: April 29, 1986.
Effective date: April 29, 1986.
Amendment No.: 12.
Facility Operating License No. NPF-29. Amendment revised the license.
Date of initial notice in Federal Register: February 26, 1986, (51 FR 6826) The Commission's related evaluation of the amendment is contained in a Safety Evaluation dated April 29, 1986.
No significant hazards consideration comments received: No.
Local Public Document Room Location: Hinds Junior College, McLendon Library, Raymond, Mississippi 39154.

Niagara Mohawk Power Corporation, Docket No. 50-220, Nine Mile Point Nuclear Station, Unit No. 1, Oswego County, New York

Date of amendment request: December 6, 1985, as supplemented January 13, 1986.
Brief description of amendment: The amendment modifies Technical Specification Section 3.1.7 to reflect the addition of Maximum Average Planar Linear Heat Generation Rate Limits for the General Electric fuel bundle, type P8DRB299.
Date of issuance: April 30, 1986.
Effective date: April 30, 1986.
Amendment No.: 81.
Facility Operating License No. DPR-63. Amendment revised the Technical Specifications.
Date of initial notice in Federal Register: February 12, 1986 (51 FR 5276).
The Commission's related evaluation of the amendment is contained in a Safety Evaluation dated April 30, 1986.
No significant hazards consideration comments received: No.
Local Public Document Room location: State University College at Oswego, Penfield Library—Documents, Oswego, New York 13126.

Power Authority of the State of New York, Docket No. 50-333, James A. FitzPatrick Nuclear Power Plant, Oswego County, New York

Date of application for amendment: October 11, 1985.
Brief description of amendment: The amendment revises the Technical Specifications to (1) permit reactor operation with one recirculation loop out of service and (2) to include General Electric Company's Service Information Letter (SIL) 380, Revision 1 recommendations regarding thermal-hydraulic stability for dual loop and single loop operation.
Date of issuance: May 6, 1986.
Effective date: May 6, 1986.
Amendment No.: 98.
Facility Operating License No. DPR-59. Amendment revised the Technical Specifications.
Date of initial notice in Federal Register: December 4, 1985 (50 FR 49790).
The Commission's related evaluation of the amendment is contained in a Safety Evaluation dated May 6, 1986.
No significant hazards consideration comments received: No.
Local Public Document Room location: Penfield Library, State University College of Oswego, Oswego, New York.

Rochester Gas and Electric Corporation, Docket No. 50-244, R. E. Ginna Nuclear Power Plant, Wayne County, New York

Date of application for amendment: August 1, 1983, supplemented October 26, 1983.
Brief description of amendment: The amendment approves changes to the Technical Specifications which add the requirement to perform a periodic battery discharge test.
Date of issuance: May 8, 1986.
Effective date: May 8, 1986.
Amendment No.: 14.
Facility Operating License No. DPR-18: Amendment revised the Technical Specifications.
Date of initial notice in Federal Register: October 23, 1985 (50 FR 3034).
The Commission's related evaluation of the amendment is contained in a Safety Evaluation dated May 8, 1986.
No significant hazards consideration comments received: No.
Local Public Document Room location: Rochester Public Library, 115 South Avenue, Rochester, New York 14610.

Virginia Electric and Power Company, et al., Docket Nos. 50-338 and 50-339, North Anna Power Station, Units No. 1 and No. 2, Louisa County, Virginia

Date of application for amendments: November 11, 1985.
Brief description of amendments: The amendments modify License Condition 2.E for NA-1&2 by incorporating the latest revisions to the security, contingency, and guard training and qualification plans. The changes clarify License Condition 2.E and thereby avoid confusion by the licensee's personnel and NRC staff as to the plan versions currently in effect. The current revision of the NA Security Plan is revision No. 14 dated September 5, 1985. The current revision of the Guard Training and Qualification Plan is revision No. 9 dated August 30, 1985. The current revision of the Safeguards Contingency

Plan is Revision No. 14 (Chapter 8 of Security Plan) dated September 5, 1985.

Date of issuance: April 30, 1986.

Effective date: April 30, 1986.

Amendment Nos.: 77 and 66.

Facility Operating License Nos. NPF-4 and NPF-7: Amendments revised the Technical Specifications.

Date of initial notice in Federal Register: March 26, 1986 (51 FR 10471) The Commission's related evaluation of the amendments is contained in a Safety Evaluation dated April 30, 1986.

No significant hazards consideration comments received: No.

Local Public Document Room locations: Board of Supervisors Office, Louisa County Courthouse, Louisa, Virginia 23093, and the Alderman Library, Manuscripts Department, University of Virginia, Charlottesville, Virginia 22901.

Virginia Electric and Power Company, et al., Docket Nos. 50-338 and 50-339, North Anna Power Station, Units No. 1 and No. 2, Louisa County, Virginia

Date of application for amendments: November 2, 1984.

Brief description of amendments: The amendments revise the NA-1&2 TS to reflect changes in the current organization within the Nuclear Operation Department, Quality Assurance Department, Maintenance and Performance Services Department and Security Department. In addition, the changes reflect title changes to corporate officials and responsibilities and reporting requirements. The most significant change involved the creation of the Manager, Nuclear Programs and Licensing, and the Assistant Station Manager (Nuclear Safety and Licensing).

Date of issuance: May 8, 1986.

Effective date: May 8, 1986.

Amendment Nos.: 78 and 67.

Facility Operating License Nos. NPF-4 and NPF-7. Amendments revised the Technical Specifications.

Date of initial notice in Federal Register: December 31, 1984 (49 FR 50828).

The Commission's related evaluation of the amendments is contained in a Safety Evaluation dated May 8, 1986.

No significant hazards consideration comments received: No.

Local Public Document Room locations: Board of Supervisors Office, Louisa County Courthouse, Louisa, Virginia 23093, and the Alderman Library, Manuscripts Department, University of Virginia, Charlottesville, Virginia 22901.

Washington Public Power Supply System, Docket No. 50-397, WNP-2, Richland, Washington

Date of application for amendment: April 25, 1985.

Brief description of amendment: This amendment revises the Technical Specifications of the WNP-2 Operating License NPF-21 to change the Surveillance Requirement 4.6.1.1. The change allows certain containment isolation valves to be excluded from routine surveillance requirements while the plant is at power. The purpose of the proposed change is to avoid unnecessary personnel hazards from both a safety and ALARA standpoint.

Date of issuance: May 2, 1986.

Amendment No.: 22.

Effective date: May 2, 1986.

Facility Operating License No. NPF-21: Amendment revised the Technical Specifications.

Date of initial notice in Federal Register: July 17, 1985 (50 FR 29021).

The Commission's related evaluation of the amendment is contained in a Safety Evaluation dated May 2, 1986.

No significant hazards consideration comments received: No.

Local Public Document Room location: Richland Public Library, Swift and Northgate Streets, Richland, Washington 99352.

Washington Public Power Supply System, Docket No. 50-397, WNP-2, Richland, Washington

Date of application for amendment: October 14, 1985.

Brief description of amendment: This action amends the License Condition 2.C.(16), Attachment 2, item 3(b) to extend the deadline to the second refueling outage for implementing the requirements of Regulatory Guide 1.97, Revision 2, for flux monitoring.

Date of Issuance: May 5, 1986.

Effective Date: May 5, 1986.

Amendment No: 23.

Facility Operating License No. NPF-21: Amendment revised a License Condition.

Date of Initial Notice in the Federal Register: January 29, 1986 (51 FR 3721).

The Commission's related evaluation of the amendment is contained in a Safety Evaluation dated May 5, 1986.

No significant hazards consideration comments received: No.

Local Public Document Room location: Richland Public Library, Swift and Northgate Streets, Richland, Washington 99352.

NOTICE OF ISSUANCE OF AMENDMENT TO FACILITY OPERATING LICENSE AND FINAL DETERMINATION OF NO SIGNIFICANT HAZARDS CONSIDERATION

During the period since publication of the last bi-weekly notice, individual notices of issuance of amendments have been issued for the facilities listed below. These notices were previously published as separate individual notices. They are repeated here because this bi-weekly notice lists all amendments that have been issued for which the Commission has made a final determination that an amendment involves no significant hazards consideration.

In this case, a prior Notice of Consideration of Issuance of Amendment and Proposed No Significant Hazards Consideration Determination and Opportunity for Hearing was issued, a hearing was requested, and the amendment was issued before any hearing because the Commission made a final determination that the amendment involves no significant hazards consideration.

Details are contained in the individual notice as cited.

GPU Nuclear Corporation, et al., Docket No. 50-289, Three Mile Island Nuclear Station, Unit No. 1, Dauphin County, Pennsylvania

Date of application for amendment: February 4, 1986.

Brief description of amendment: This amendment revises the repair limits for the steam generator tubes under a very restrictive set of circumstances as described in the request. Basically, for certain defects located on the primary side of the tubes, the amendment changes the mandatory repair limit from 40% to 50% throughwall penetration providing the defect is less than 0.55 inches long. The amendment is also only effective until the next refueling outage at which time the steam generator tube repair criteria will be re-evaluated.

Date of issuance: April 18, 1986.

Effective date: April 18, 1986.

Amendment No. 116.

Facility Operating License No. DPR-50.

Date of individual notice in Federal Register: May 2, 1986 (51 FR 16411).

Dated at Bethesda, Maryland this 15th day of May 1986.

For the Nuclear Regulatory Commission.
Frank Schroeder,
Acting Director, Division of PWR Licensing-B.
FR Doc. 86-11377 Filed 5-20-86; 8:45 am]
BILLING CODE 7590-01-M

[Docket Nos. 50-413 and 50-414]

Duke Power Co. et al. Consideration of Issuance of Amendments to Facility Operating Licenses and Proposed No Significant Hazards Consideration Determination and Opportunity for Hearing

The U.S. Nuclear Regulatory Commission (the Commission) is considering issuance of amendments to Facility Operating License Nos. NPF-35 and NPF-52, issued to Duke Power Company, et al. (the licensee), for operation of the Catawba Nuclear Station, Units 1 and 2, located in York County, South Carolina.

Although amendments will be issued for both Units 1 and 2, changes are proposed for Unit 1 only. Unit 2 is included in this notice only because the Technical Specifications are combined in one document for both units.

The amendments would extend, on a one-time basis and until the first refueling outage, the 18-month or 24-month technical specification (TS) surveillances for the following items which can only be conducted when Unit 1 is shut down:

1. Position Indicators for the Power-Operated Relief Valves (PORVs) and Associated Block Valves—TS Table 4.3-7, Items 11 and 12. Channel calibratiion would be extended from July 24, 1986, and would be performed prior to entering HOT STANDBY following first refueling.

2. High Range Radiation Monitor (EMF-53 A&B) for the Containment Area—TS Table 4.3-7, Item 18. Channel calibration would be extended from August 25, 1986, and would be performed prior to entering HOT STANDBY following first refueling.

3. Loose-Parts Detection Systems—TS 4.3.3.9C. Channel calibration would be extended from August 14, 1986, and would be performed prior to entering STARTUP following first refueling.

4. Turbine Overspeed Protection Instrumentation—TS 4.3.4.2C. Channel calibration would be extended from 8/19/86 and would be performed prior to entering HOT STANDBY following first refueling.

5. Reactor Coolant Leakage Detection Systems—TS 4.4.6.1b. Channel calibration of the containment floor and equipment pump level and flow monitoring subsystem would be extended from 8/9/86 and would be performed prior to entering HOT SHUTDOWN following first refueling.

6. Type C Tests for Containment Leakage—TS 4.6.1.2d. Local (Type C) leak testing of those penetrations identified in a new Table 3.6-1a would be extended from the present range of 8/19/86 through 8/22/86 and would be performed prior to entering HOT SHUTDOWN following first refueling. The penetration designations (and their associated services) identified in new Table 3.6-1a would be: M230 (nuclear service water from reactor coolant pump and lower containment ventilation units), M215 (breathing air), M219 (station air), M358 (refueling water pump suction), M356 (equipment decontamination line), M345 (recycle holdup tank from reactor coolant drain tank—valve 1 WL806 only), M204 (containment air addition), M259 (reactor makeup water flush header), E101 through 450 (electrical penetrations for various equipment), and M374 (containment floor sump and incore instrumentation sump pumps discharge). This extension would also be subject to the granting of a partial exemption from 10 CFR 50, Appendix J, pursuant to 10 CFR 50.12(a) (50 FR 50764).

7. Steam Generator Level Transmitter 1 CFLT 5632, TS 4.7.13.6. Channel calibration of this transmitter would be extended from 7/2/86 and would be performed prior to entering HOT STANDBY following first refueling.

8. Diesel Generator (DG), TS 4.8.1.1.2g.1. The inspection to procedures based upon the DG manufacturer's recommendations would be extended from 7/3/86 (for DG 1A) and 8/15/86 (for DG 1B) and would be performed prior to entering HOT SHUTDOWN following first refueling.

9. Containment Penetration Conductor Overcurrent Protective Devices, TS 4.8.4a. Channel calibration and various functional tests for the devices identified in TS table 3.8-1A would be extended from 8/2/86 and would be performed prior to entering HOT SHUTDOWN following first refueling.

Normally, since refueling outages occur about every 18 months, extension beyond the 18-month or 24-month surveillance interval required by the Technical Specifications for such calibrations and testing as in the above nine items is usually not necessary. However, due to the extended length of the Unit 1 startup program and cycle 1, the licensee must either request and receive an extension or shut down prior to the first scheduled refueling outage. Unit 1 is currently scheduled to enter its first refueling outage in late August 1986, but no later than September 28, 1986. Therefore, with the exception of the DG surveillance which involves an extension of about 4 months, the requested extensions entail a period of about 3 month or less.

The proposed amendments are in accordance with the licensee's request dated May 5, 1986. The changes would be accomplished by adding a footnote usually stating that this surveillance need not be performed until prior to entering HOT SHUTDOWN, HOT STANDBY or STARTUP, as applicable, following the Unit 1 first refueling outage, and clarifying that the footnote (i.e., the extension) applies to Unit 1 only.

Before issuance of the proposed license amendments, the Commission will have made findings required by the Atomic Energy Act of 1954, as amended (the Act) and the Commission's regulations.

The Commission has provided certain examples (48 FR 14870) of actions likely to involve no significant hazards considerations. The request involved in this case does not match any of those examples. However, the licensee has concluded and the Commission agrees that each technical specification change in the requested amendments does not involve a significant hazards consideration for the reasons set forth below:

1. Position Indicators for PORVs and Associate Block Valves. The extension to the surveillance interval for channel calibration would be for a relatively brief period (about 2 months). These indicators are designed, installed and maintained to standards which assure high reliability and operating experience to date has been most favorable. Other surveillances not changed by the proposed amendments require periodic operation of the PORV (TS 4.4.4.1b) and their block values (TS 4.4.4.2) through one complete cycle of full travel, and thus ensure continued operability of these values. The changes do not alter any design basis, safety limits, limiting safety system settings, or limiting conditions for operation. Therefore, operation of the facility in accordance with this portion of the proposed amendments would not (1) involve a significant increase in the probability of consequences of an accident previously evaluated, or (2) involve a significant reduction in a margin of safety. Because this portion of the proposed amendments involves no design change and no change in the method and manner of plant operations, it would not (3) create the possibility of a new or

different kind of accident from any accident previously evaluated.

2. High Range Radiation Monitor (EMF-53A and B) for the Containment Area. EMF-53A and B is a reliable radiation monitor whose purpose is to detect high levels of radiation which might be released during an accident. The extension to the surveillance interval for channel calibration would be brief (about one month). Monthly channel checks for EMF-53A and B required by TS Table 4.3-7 would not be altered by the proposed amendments and these checks ensure continued operability. The proposed amendments for EMP-53A and B would not change any design bases, safety limit, limiting safety system setpoints or limiting condition for operation. Therefore, operation of the facility in accordance with this portion of the proposed amendments would not: (1) Involve a significant increase in the probability or consequences of an accident previously evaluated, or (2) involve a significant reduction in a margin of safety. Because this portion of the proposed amendment would not change the design or operation of the plant, it would not (3) create the possibility of a new or different kind of accident from any accident previously evaluated.

3. Loose-Parts Detection System. The extension in surveillance interval for channel calibration would be brief (about 1½ months). Other TS surveillance requirements for daily channel checks and monthly analog channel operational tests, plus system capability of overlap testing of the circuits, would not be changed by the proposed amendments and ensure continued operability of the system. The proposed amendments with respect to this system would not change any design bases, safety limits, limiting safety system setpoints or limiting conditions for operation. Therefore, operation of the facility in accordance with this portion of the proposed amendments would not (1) involve a significant increase in the probability or consequences of an accident previously evaluated, or (2) involve a significant reduction in a margin of safety. Because this portion of the proposed amendments would not change the design or operation of the plant, it would not (3) create the possibility of a new or different kind of accident from any accident previously evaluated.

4. Turbine Overspeed Protection Instrumentation. The extension in surveillance interval for channel calibration of this instrumentation is brief (about 1½ months). Other TS surveillance requirements for weekly cycling of the high pressure turbine intermediate stop valves and low pressure turbine intercept valves, and for monthly cycling of the high pressure turbine control valves, would not be changed by the proposed amendments and will ensure continued operability of the system. The proposed amendments with respect to this instrumentation would not change any design bases, safety limits, limiting safety system setpoints or limiting conditions for operation. Therefore, operation of the facility in accordance with this portion of the proposed amendments would not: (1) Involve a significant increase in the probability or consequences of an accident previously evaluated, or (2) involve a significant reduction in a margin of safety. Because this portion of the proposed amendments would not change the design or operation of the plant, it would not (3) create the possibility of a new or different kind of accident from any accident previously evaluated.

5. Reactor Coolant Leakage Detection Systems. The extension in surveillance interval for channel calibration of the containment floor and equipment sump level and flow monitoring subsystem would be brief (less than 2 months). Other TS surveillance requirements with respect to the containment atmosphere gaseous and particulate monitoring system and the containment ventilation unit condensate drain tank level monitoring subsystem would not be changed by the proposed amendments and assure adequate capability to monitor reactor coolant system leakage. The proposed amendments with respect to this system would not change any design bases, safety limits, limiting safety system setpoints or limiting conditions for operation. Therefore, operation of the facility in accordance with this portion of the proposed amendments would not: (1) Involve a significant increase in the probability or consequences of an accident previously evaluated, or (2) involve a significant reduction in a margin of safety. Because this portion of the proposed amendments would not change the design or operation of the plant, it would not (3) create the possibility of a new or different kind of accident from any accident previously evaluated.

6. Type C Leak Rate Tests. The extension of the 24 month surveillance interval associated with leak rate testing of the several containment penetrations identified for the proposed amendments would be brief (about 1½ months). The previous leak rate test results for each of these penetrations were quite good, and there is no reason to suspect significant degradation would have occurred since the previous tests. The proposed amendments with respect to these tests would not change any design bases, safety limits, limiting safety system setpoints or limiting conditions for operation. Therefore, operation of the facility in accordance with this portion of the proposed amendments would not (1) involve a significant increase in the probability or consequences of an accident previously evaluated, or (2) involve a significant reduction in a margin of safety. Because this portion of the propsoed amendments would not change the design or operation of the plant, it would not (3) create the possibility of a new different kind of accident from any accident previously evaluated. This extension request also requires a partial, one-time exemption from section III.D.3 of Appendix J to 10 CFR 50. Such exemption is currently being considered by the Commission based upon licensee's exemption request of May 9, 1986.

7. Steam Generator Level Transmitter 1 CFLT 5632. This transmitter provides indication within the Standby Shutdown Facility of the Steam Generator "C" wide range level. This is a non-safety related transmitter which provides Control Room indication but has no actuation capability. The extension of the surveillance interval for channel calibration would apply only to this single transmitter; the other three level transmitters (one per steam generator) would continue to be calibrated as presently required. The surveillance interval extension for transmitter 1 CFLT 5632 would be relativiely brief (about 3 months). The proposed amendments would not change existing TS requirements for monthly channel checks for all four level transmitters. The proposed amendments with respect to this transmitter would not change any design bases, safety limits, limiting safety system setpoints or limiting conditions for operation. Therefore, operation of the facility in accordance with this portion of the proposed amendments would not (1) involve a significant increase in the probability or consequences of an accident previously evaluated, or (2) involve a significant reduction in a margin of safety. Because this portion of the proposed amemdents would not change the design or operation of the plant, it would not (3) create the possibility of a new or different kind of accident from any accident previously evaluated.

8. DG Inspection—An extension of about 4 months (i.e., from July 3, 1986, to about October 28, 1986) would be provided by the proposed amendments

to complete the inspection of the first of the two diesel generators. The inspection to procedures prepared to the manufacturer's recommendations involves the dessembly of the diesel and normally reuires up to 30 days to perform. (Since one DG is required to be operable in COLD SHUTDOWM and REFUELING, the inspections must be performed one at a time, and the 30 days is included in the extension period to complete inspection of the first diesel starting September 28, 1986). During this time period, one diesel would remain operable and the appropriate surveillances would be conducted to assure its operability. Extensive inspections were performed on each diesel prior to Unit 1 startup (see SSER 4). All other required surveillances would continue to be performed (with the exception of those related to the ESF actuation surveillance interval extension previously granted by Amendment 7) and will provide assurance of continued diesel generator operability. The proposed amendments to extend this DG inspection interval would not change any design bases, safety limits, limiting safety system setpoints or limiting conditions for operation. Therefore, operation of the facility in accorance with this portion of the proposed amendments would not (1) involve a significant increase in the probability or consequences of an accident previously evaluated, or (2) involve a significant reduction in a margin of safety. Because this portion of the proposed amendments would not change the design or operation of the plant, it would not (3) create the possibility of a new or different kind of accident from any accident previously evaluated.

9. Containment Penetration Conductor Overcurrent Protective Devices. The proposed amendments would provide for a relatively beief extention (about 2 months) of the surveillance interval associated with channel calibration of certain protective relays and functional testing of a 10% sample of circuit breakers and fuses listed in TS Table 3.8–1A. The licensee reports that the breakers and fuses have been highly reliable with no failures or actuations recorded to date. The proposed amendments with respect to these devices would not change any design bases; safety limits, limiting safety systems setpoints or limiting conditions for operation. Therefore, operation of the facility in accordance with this portion of the proposed amendments would not (1) involve a significant increase in the probability or consequences of an accident previously evaluated, or (2) involve a significant reduction in a margin of safety. Because this portion of the proposed amendment would not change the design or operation of the plant, it would not (3) create the possibility of a new or different kind of accident from any accident previously evaluated.

Accordingly, the commission proposes to determine that these changes do not involve a significant hazards consideration.

The Commission is seeking public comments on this proposed determination. Any comments received within 30 days after the date of publication of this notice will be considered in making any final determination. The Commission will not normally make a final determination unless it receives a request for a hearing.

Written comments may be submitted to the Rules and Procedures Branch, Division of Rules and Records, Office of Administration, U.S. Nuclear Regulatory Commission, Washington, DC 20555 and should cite the publication date and page number of this **Federal Register** notice. Comments may also be delivered to Room 4000, Maryland National Bank Building, Bethesda, Maryland from 8:15 a.m. to 5:00 p.m. Monday through Friday. Copies of comments received may be examined at the NRC Public Document Room, 1717 H Street NW., Washington, DC.

By June 19, 1986, the licensee may file a request for a hearing with respect to issuance of the amendments to the subject facility operating licenses and any person who interest may be affected by this proceeding and who wishes to participate as a party in the proceeding must file a written petition for leave to intervene. Request for a hearhing and petitions for leave to intervene shall be filed in accordance with the Commission's "Rules of Practice for Demostic Licensing Proceedings" in 10 CFR Part 2. If a request for a hearing or petition for leave to intervene is filed by the above date, the Commission or an Atomic Safety and Licensing Board, designated by the Commission or by the Chairman of the Atomic Safety and Licensing Board Panel, will rule on the request and/or petition and the Secretary or the designated Atomic Safety and Licensing Board will issue a notice of hearing or an appropriate order.

As required by 10 CFR 2.714, a petition for leave to intervene shall set forth with particularity the interest of the petitioner in the proceeding, and how that interest may be affected by the results of the proceeding. The petition should specifically explain the reasons why intervention should be permitted with particular reference to the following factors: (1) The nature of the petitioner's right under the Act to be made a party to the proceeding; (2) the nature and extent of the petitioner's property, financial, or other interestin the proceeding; and (3) the possible effect of any order which may be entered in the proceeding on the petitioner's interest. The petition should also identify the specific aspects(s) of the subject matterof the proceeding as to which petitioner wishes to intervene. Any person who has filed a petition for leave to intervene or who has been admitted as a party may amend the petition without requesting leave of the Board up to fifteen (15) days prior to the first prehearing conference scheduled in the proceeding, but such an amended petition must satisfy the specificity requirements described above.

Not later than fifteen (15) days prior to the first rehearing conference scheduled in the proceeding, a petitioner shal file a supplement to the petition to intervene which must include a list of the contentions which are sought to be litigated in the matter, and the bases for each contention set forth with reasonable specificity. Contentions shall be limited to matters within the scope of the amendment under consideration. A petitioner who fails to file such a supplement which satisfies these requirements with respect to at least one contention will not be permitted to participate as a party.

Those permitted to intervene become parties to the proceeding, subject to any limitation in the order granting leave to intervene, and have the opportunity to participate fully in the conduct of the hearing, including the opportunity to present evidence and cross-examine witnesses.

If a hearing is requested, the Commission will make a final determination of the issue of no significant hazards consideration. The final determination will serve to decide when the hearing is held.

If the final determination is that the amendment request involves no significant hazards consideration, the Commission may issue the amendment and make it effective, notwithstanding the request for a hearing. Any hearing held would take place after issuance of the amendment.

If the final determination is that the amendment involves a significant hazards consideration, any hearing held would take place before the issuance of any amendment.

Normally, the Commission will not issue the amendment until the expiration of the 30-day notice period. However, should circumstances change during the notice period such that failure to act in a timely way would result, for example, in derating or shutdown of the facility, the Commission may issue the license amendment before the expiration of the of the 30-day notice period, provided that its final determination is that the amendment involves no significant hazards consideration. The final determination will consider all public and State comments received. Should the Commission take this action, it will publish a notice of issuance and provide for opportunity for a hearing after issuance. The Commission expects that the need to take this action will occur very infrequently.

A request for a hearing or a petition for leave to intervene must be filed with the Secretary of the Commission, U.S. Nuclear Regulatory Commission, Washington, DC 20555, Attention: Docketing and Service Branch, or may be delivered to the Commission's Public Document Room 1717 H Street NW, Washington, DC, by the above date. Where petitions are filed during the last ten (10) days of the notice period, it is requested that the petitioner promptly so inform the Commission by a toll-free telephone call to Western Union at (800) 325-6000 (in Missouri (800) 342-6700). The Western Union operator should be given Datagram Identification Number 3737 and the following message addressed to B.J. Youngblood: petitioner's name and telephone number; date petition was mailed; plant name; and publication date and page number of this **Federal Register** notice. A copy of the petition should also be sent to the Executive Legal Director, U.S. Nuclear Regulatory Commission, Washington, DC 20555, and to Mr. William Porter, Duke Power Company, 422 South Church Street, Charlotte, North Carolina 28242, attorney for the licensee.

Nontimely filings of petitions for leave to intervene, amended petitions, supplemental petitions and/or requests for hearing will not be entertained absent a determination by the Commission, the presiding officer or the presiding Atomic Safety and Licensing Board that the petition and/or request should be granted based upon a balancing of the factors specified in 10 CFR 2.714(a)(1)(i)-(v) and 2.714(d).

For further details with respect to this action, see the application for amendments which is available for public inspection at the Commission's Public Document Room, 1717 H Street NW, Washington, DC, and at the York County Library, 138 East Black Street, Rock Hill, South Carolina 29730.

Dated at Bethesda, Maryland, this 15th day of May 1986.

For the Nuclear Regulatory Commission.

P. O'Connor,

Acting Director, PWR Project Directorate #4, Division of PWR Licensing-A, NRR.

[FR Doc. 86-11386 Filed 5-20-86; 8:45 am]

BILLING CODE 7590-01-M

[Docket No. 50-414]

Catawba Nuclear Station, Unit 2; Issuance of Facility Operating License

Notice is hereby given that the U.S. Nuclear Regulatory Commission (the Commission) has issued Facility Operating License No. NPF-52 to Duke Power Company, North Carolina Municipal Power Agency No. 1 and Piedmont Municipal Power Agency (the licensees) which authorizes operation of the Catawba Nuclear Station, Unit 2, at reactor core power levels not in excess of 3411 megawatts thermal in accordance with the provisions of the license, the Technical Specifications, and the Environmental Protection Plan.

On February 24, 1986, the Commission issued Facility Operating License No. NPF-48 to the licensees which authorized operation of Catawba Nuclear Station, Unit 2, to five percent of full power (170 megawatts thermal).

License No. NPF-52 supersedes NPF-48. NUREG-1191, Technical Specifications, issued in connection with NPF-52 supersedes NUREG-1182. However, the new Technical Specifications are identical to those issued with the previous license except as modified by license amendment number 7 issued on April 24, 1986, for Catawba Unit 1.

The Catawba Nuclear Station, Unit 2, is a pressurized water reactor located in York County, South Carolina, approximately 6 miles north of Rock Hill, South Carolina.

The application for the license complies with the standards and requirements of the Atomic Energy Act of 1954, as amended (the Act) and the Commission's regulations. The Commission has made appropriate findings as required by the Act and the Commission's regulations in 10 CFR Chapter 1, which are set forth in the license. Prior public notice of the overall action involving the proposed issuance of an operating license was published in the **Federal Register** on June 25, 1981 (46 FR 32974). The power level authorized by this license and the conditions contained therein are encompassed by that prior notice.

The Commission has determined that the issuance of this license will not result in any environmental impacts other than those evaluated in the Final Environmental Statement since the activity authorized by the license is encompassed by the overall action evaluated in the Final Environmental Statement.

Pursuant to 10 CFR 51.32, the Commission has determined that the issuance of exemptions included in this license will have no significant impact on the environment (51 FR 5619).

For further details with respect to this action, see (1) Facility Operating License NPF-52; (2) Facility Operating License No. NPF-48; (3) the Commission's Safety Evaluation Report, dated February 1983 (NUREG-0954), and Supplements 1 through 6; (5) the final Safety Analysis Report and Amendments thereto; (6) the Environmental Report and supplements thereto; (7) the Final Environmental Statement, dated January 1983 (NUREG-0921); (8) the Partial Initial Decision of the Atomic Safety and Licensing Board, dated June 22, 1984; (9) the Supplemental Partial Decision on Emergency Planning dated September 18, 1984; and (10) the Partial Initial Decision Resolving Foreman Override Concerns and Authorizing Issuance of Operating Licenses dated November 27, 1984.

These items are available at the Commission's Public Document Room 1717 H Street, NW., Washington, DC 20555, and at the York County Library, 138 East Black Street, Rock Hill, South Carolina 29730. A copy of the Facility Operating License NPF-52 may be obtained upon request addressed to the U.S. Nuclear Regulatory Commission, Washington, DC 20555, Attention: Director, Division of PWR Licensing-A. Copies of the Safety Evaluation Report and its supplements (NUREG-0954) and the Final Environmental Statement (NUREG-0921) may be purchased through the U.S. Government Printing Office by calling (202) 275-2060 or by writing to the U.S. Government Printing Office, P.O. Box 37082, Washington, DC 20013-7082. Copies may also be purchased from the National Technical Information Service, U.S. Department of Commerce, 5285 Port Royal Road, Springfield, Virginia 22161.

Dated at Bethesda, Maryland, this 15th day of May 1986.

For the Nuclear Regulatory Commission

Paul O'Connor,

Acting Director, PWR Project Directorate #4, Division of PWR Licensing-A, NRR

[FR Doc. 86-11447 Filed 5-20-86; 8:45 am]

BILLING CODE 7590-01-M

[Docket No. 40-8027]

Sequoyah Fuels Corp; Receipt of Request for Action

Notice is hereby given that by Petition dated March 21, 1986, Thomas Carpenter of the Government Accountability Project, on behalf on Native Americans for a Clean Environment Council, Carlisle Citizens Association National Water Center, Arkansas Peace Center, and Fayetteville Peace and Justice Center has requested that the Commission immediately impose an indefinite suspension of the operating license for the Sequoyah Fuel Corporation's facility in Gore, OK. The Petition requests that the Commission take this action pending compliance of the facility with all licensing requirements, completion of an Interagency Task Force review of the accident which occurred at the facility on January 4, 1986, completion of all ongoing staff inspections and investigations, an independent inspection and review of the causes of the January 4 accident by a third party, and a management study to determine the cause of alleged noncompliance by the licensee with regulatory requirements. Additionally, the Petition requests that the Office of Inspector and Auditor (OIA) undertake a review of applicable NRC regulations to determine whether sufficient regulatory controls exist at the Gore facility and whether NRC regulations are adequate to prevent occurrences such as that of January 4. The Petition is being treated as a request for action under 10 CFR 2.206 and, accordingly, the staff will take appropriate action on the request within a reasonable time.

A copy of the Petition is available for public inspection in the Commission's public document room at 1717 H Street, NW, Washington, D.C. 20555 and in the local public document for the facility located at Sallisaw City Library, 101 East Cherokee, Sallisaw, OK, 74955.

Dated at Bethesda, Maryland this 13th day of May, 1986.

For the Nuclear Regulatory Commission.

James M. Taylor,

Director, Office of Inspection and Enforcement.

[FR Doc. 86-11445 Filed 5-20-86 8:45 am]

BILLING CODE 7590-01-M

[Docket No. 50-029]

Yankee Atomic Electric Co.; Denial of Amendment to Facility Operating License and Opportunity for Hearing

The U.S. Nuclear Regulatory Commission (the Commission) has denied in part a request by the licensee for amendment to Facility Operating License No. DPR-3, issued to the Yankee Atomic Electric Company (the licensee), for operation of the Yankee Nuclear Power Station (the facility), located in Franklin County, Massachusetts.

The amendment, as proposed by the licensee, modified the facility Technical Specifications (TS) for the Safety Injection Tank Temperature, Steam Generator Blowdown Monitors, Containment Isolation Boundaries, ECCS Surveillance requirements, Reactor Vessel Fluence, the Carbon Dioxide fire suppression system, the plant on-site review committee composition, and the Radioactive Effluent monitoring system. The licensee's application for amendment was dated May 26, 1981, as revised January 23, 1984 and February 26, 1985. The requested changes were granted except for proposed changes dealing with a change to allow isolated loop charging, a request to delete a reference to TS 4.0.5, changes to the control room ventilation TS, a change to allow use of a temporary door in the Vapor Container Airlock, and a change that would have removed the requirement to sample for tritium after a core power change.

Notice of issuance of Amendment No. 92 will be published in the Commission's next regular **Federal Register** notice.

The portions of the application that were denied were:

(1) A request to allow isolated loop charging. The facility is currently not allowed to operate, according to their current TS, with an isolated loop under the conditions specified, i.e., above 1000 PSIG.

(2) A request to delete a reference to TS 4.0.5 since at the time of the request, TS 4.0.5 did not exist. TS 4.0.5 was subsequently issued in Amendment No. 81, and the reference to TS 4.0.5 should be kept in the TS.

(3) Changes to the control room ventilation TS. The request reflected operation that was susceptible to single failure and needed to be reevaluated by the licensee.

(4) A change to allow use of a temporary door in the Vapor Container Airlock. The proposed change was not sufficiently prescriptive in defining what constituted a temporary door, such that the consequences of a fuel handling accident would be adequately reduced by the temporary door.

(5) A request to remove the requirement to sample for tritium after a step change in reactor thermal power. Since tritium levels may change with power, the justification for this item is incorrect.

The licensee was notified of the Commission's denial of this request by letter dated May 14, 1986.

The licensee may demand a hearing with respect to the denial described above and any person whose interest may be affected by this proceeding may file a written petition for leave to intervene. Such requests for hearing and leave to intervene must be received by June 24, 1986.

A request for a hearing or petition for leave to intervene must be filed with the Secretary of the Commission, U.S. Nuclear Regulatory Commission, Washington, D.C., 20555, Attention: Docketing and Service Branch, or may be delivered to the Commission's Public Document Room, 1717 H Street, N.W., Washington, D.C., by the above date.

A copy of the petition should also be sent to the Executive Legal Director, U.S. Nuclear Regulatory Commission, Washington, D.C., 20555, and to Thomas Dignan, Esquire, Ropes and Gray, 225 Franklin Street, Boston, Massachusetts 02110, attorney for the licensee.

For further details with respect to this action, see (1) the application for amendment dated May 26, 1981, as revised January 23, 1984 and February 26, 1985, and (2) the Commission's letter to the licensee dated May 14, 1986, which are available for public inspection at the Commission's Public Document Room, 1717 H Street, N.W., Washington, D.C., and at the Greenfield Community College, 1 College Drive, Greenfield, Massachusetts. A copy of item (2) may be obtained upon request addressed to the U.S. Nuclear Regulatory Commission, Washington, D.C., 20555, Attention: Director, Division of PWR Licensing-A.

Dated at Bethesda, Maryland, this 14th day of May 1986.

For the Nuclear Regulatory Commission.

George E. Lear,

Director Project Directorate #1 Division of PWR Licensing-A.

[FR Doc. 86-11446 Filed 5-20-86; 8:45 am]

BILLING CODE 7590-01-M

SECURITIES AND EXCHANGE COMMISSION

[File No. 1-3534]

Application To Withdraw From Listing and Registration; American Broadcasting Companies, Inc. ("ABC"); 9.35% Sinking Fund Debentures due July 15, 2000

May 14, 1986.

The above named issuer has filed an application with the Securities and Exchange Commission pursuant to Section 12(d) of the Securities Exchange Act of 1934 and Rule 12d-2(d) promulgated thereunder, to withdraw the specified security from listing and registration on the New York Stock Exchange, Inc. ("Exchange").

The reasons alleged in the application for withdrawing this security from listing and registration include the following:

On January 3, 1986, as a result of a merger, Capital Cities/ABC, Inc. ("Capital Cities"), through indirect wholly owned subsidiaries, acquired all of the issued and outstanding common stock of ABC. Prior thereto the common stock of ABC was listed for trading on the Exchange. A Report on Form 25 notifying the Commission of the removal of the ABC common stock from listing and registration on the Exchange was filed with the Commission by the Exchange on or about January 8, 1986. On February 3, 1986, ABC filed a request with the Commission for termination with respect to the ABC common stock.

The Debentures are not widely held and are owned principally by large institutional investors. Transfer records of ABC indicated that there are less than 50 holders of record. Based upon inquiries made by ABC's investment banking firm, ABC has learned that over $51,000 in principal amount of Debentures is held or controlled by Security Pacific National Bank. Further, the information available to ABC suggests that virtually all the Debentures are held by large institutions or by pension funds controlled by common trustees and that the number of beneficial holders of Debentures is not substantial.

During 1985, trading of Debentures on the Exchange was virtually non-existent. There was an aggregate of $357,000 in face amount of Debentures traded on the Exchange during 1985 in only 12 transactions.

Since ABC is no longer required to comply with the reporting requirements under the Exchange Act with respect to the ABC common stock and Capital Cities will not be required to separately report with respect to ABC, the continued requirement to maintain the listing and registration of the Debentures on the Exchange and with the Commission will constitute an unnecessary hardship on ABC and Capital Cities.

Any interested person may, on or before June 4, 1986, submit by letter to the Secretary of the Securities and Exchange Commission, Washington, DC 20549, facts bearing upon whether the application has been made in accordance with the rules of the Exchange and what terms, if any, should be imposed by the Commission for the protection of investors. The Commission, based on the information submitted to it, will issue an order granting the application after the date mentioned above, unless the Commission determines to order a hearing on the matter.

For the Commission, by the Division of Market Regulation, pursuant to delegated authority.

John Wheeler,

Secretary.

[FR Doc. 86-11408 Filed 5-20-86; 8:45 am]

BILLING CODE 8010-01-M

[File No. 81-725]

Application and Opportunity for Hearing; Bellevue Corp.

Notice is hereby given that Bellevue Corporation ("Applicant") has filed an application pursuant to Section 12(h) of the Securities Exchange Act of 1934, as amended, (the "1934 Act") for an order exempting Applicant from certain reporting requirements under Section 15(d) of the 1934 Act.

For a detailed statement of the information presented all persons are referred to the application which is on file at the offices of the Commission in the Public Reference Room, 450 Fifth Street NW., Washington, DC 20549.

Notice is further given that any interested persons not later than June 9, 1986 may submit to the Commission in writing his views or any substantial facts bearing on the application or the desirability of a hearing thereon. Any such communication or request should be addressed: Secretary, Securities and Exchange Commission, 450 Fifth Street NW., Washington, DC 20549, and should state briefly the nature of the interest of the person submitting such information or requesting the hearing, the reasons for such request, and the issues of fact and law raised by the application which he desires to controvert. Persons who request a hearing or advice as to whether a hearing is ordered will receive any notices and orders issued in this matter, including the date of the hearing (if ordered) and any postponements thereof. At any time after that date, an order granting the application may be issued upon request or upon the Commission's own motion.

For the Commission, by the Division of Corporation Finance, pursuant to delegated authority.

John Wheeler,

Secretary.

[FR Doc. 86-11409 Filed 5-20-86; 8:45 am]

BILLING CODE 8010-01-M

[Release No. IC-15097; File No. 812-6313]

Application and Opportunity for a Hearing; Mutual of America Life Insurance Co., et al.

May 14, 1986.

Notice is hereby given that Mutual of America Life Insurance Company (the "Company"), Mutual of America Separate Account No. 2 ("Account No. 2") and Mutual of America Investment Corporation (the "Fund"), (together, "Applicants") filed an application on February 28, 1986, and an amendment thereto on April 28, 1986, for an order pursuant to Section 17(b) of the Investment Company Act of 1940 (the "Act"), exempting Applicants from the provisions of Section 17(a) of the Act, and for an order pursuant to Section 17(d) of the Act and Rule 17d-1 thereunder, approving certain transactions, to the extent necessary to permit each of the portfolios of Account No. 2 to transfer its assets to the Fund and the simultaneous reorganization of Account No. 2 into a unit investment trust; and for an order pursuant to Section 6(c) of the Act granting exemptions from Sections 26(a)(2)(C) and 27(c)(2) of the Act to permit the deduction of distribution and mortality risk charges. All interested persons are referred to the application on file with the Commission for a statement of the representations contained therein, which are summarized below, and to the Act and rules thereunder for the text of the applicable provisions.

According to the application, the Company is a mutual life insurance company authorized to transact business in New York and in certain other jurisdictions. Applicants state that Account No. 2, a separate investment account of the Company, is divided into four distinct portfolios: the Account Money Market Portfolio, the Account Stock Portfolio, the Account Bond Portfolio and the Account Composite Portfolio. Account No. 2 is registered

with the Commission as an open-end diversified management investment company and is the funding vehicle for variable annutiy contracts issued by Account No. 2 and the Company. The application states that the Fund is an open-end diversified management investment company. Applicants state that the Fund will offer its shares to separate accounts of the Company to fund benefits under contracts being offered by the Company. Applicants state that in the future, the Fund may offer shares of its existing and any future portfolios to other separate accounts of the Company in order to fund pension plan contracts, thrift plan contracts and other funding agreements offered to its clients. Applicants state that it is expected the Company and the Fund will enter into an investment advisory agreement with the same terms and fees as the corresponding agreement currently in use by Account No. 2, subject to appropriate modifications to reflect the different parties and such other modifications as the Fund and the Company may reasonably deem appropriate. Applicants state that the advisory agreement will be subject to approval by Account No. 2's participants.

Applicants propose that, subject to approval by Account No. 2's participants, Account No. 2 will be reorganized as a unit investment trust ("UIT") each subaccount of which will invest exclusively in shares of the corresponding portfolio of the Fund. Applicants state that the Committee of Account No. 2 and the Company have entered into an Agreement and Plan of Reorganization (the "Plan"), subject to the consideration of and approval by the participants. Applicants state that pursuant to the Plan, on the proposed effective date of the reorganization, the Company, on behalf of Account No. 2, will transfer the portfolio assets and related liabilities of each of the portfolios of Account No. 2 to the Fund in return for shares of a corresponding portfolio of the Fund. Applicants state that the shares to be issued by the Fund to each portfolio of Account No. 2 in exchange for the assets of each such portfolio of Account No. 2, shall be registered with the Commission under the Securities Act of 1933 on Form N-14.*

*Applicants also state that the Company and Account No. 2 will file a post-effective amendment, on From S-6, to the Form N-2 registration statement, and will file a registration statement on Form N-8B-2, to reflect the reorganization to unit investment trust form.

I. Request for Exemption Pursuant to Section 17(b)

Applicants note that each Applicant may be deemed an affiliated person or an affiliated person of an affiliated person under Section 2(a)(3) of the Act, and the reorganization may be deemed to entail one or more purchases or sales of securities or other property between and among certain Applicants. Therefore, Applicants state, the Plan and the reorganization may require an exemption from Section 17(a) of the Act, pursuant to Section 17(b) of the Act. In this regard, Applicants assert that the terms of the proposed transactions, as described in the application and the Plan, are reasonable and fair (including the consideration to be paid and received), do not involve overreaching, are consistent with the investment policies of each of the portfolios of Account No. 2, and are consistent with the general purposes of the Act.

Applicants argue that the proposed reorganization will benefit existing and future participants in the Company's contracts by facilitating the future expansion of investment alternatives, and should result in economices of scale and administration. Applicants represent that this benefit is created at no cost to existing interests under the Contracts because the Company has undertaken to assume all costs relating to the reorganization and the establishment of the Fund, and to make a daily adjustment in policy values to fully offset the effect of any and all expenses of a type or in an amount which would not have been borne by Account No. 2 had the reorganization not occurred. Applicants state that the interests of the participants will be the same as their interests, respectively, in the portfolios of Account No. 2 immediately prior to the reorganization. Applicants represent that the transactions effecting transfer of the portfolio assets of Account No. 2 in return for shares of the Fund will be effected in conformity with Section 22(c) of the Act and Rule 22c-1 thereunder. Applicants also note that the investment objectives and policies of the portfolios of Account No. 2 and with the corresponding portfolios of the Fund will be identical.

Applicants state that the reorganization will not require liquidation of any assets of Account No. 2 or the Fund; the only sales of Account No. 2's assets following the reorganization will be those arising in the ordinary course of business. Therefore, Applicants believe that neither Account No. 2 nor the Fund will incur any extraordinary costs, such as brokerage commissions, in effecting the transfer of assets. Applicants also believe that the transfer of assets and the collective registration of the accounts will be tax-free events.

II. Request for an Order Pursuant to Section 17(d) and Rule 17d-1

The application notes that the reorganization may be deemed to be a transaction that is prohibited under Section 17(d). Thus, Applicants request an order pursuant to Rule 17d-1 of the Act approving the Plan and transactions to be effected in connection with the reorganization.

Applicants assert that the participation of each of the portfolios of Account No. 2 in the proposed Plan will be on an equal basis and will not result in advantages to any one of the portfolios of Account No. 2 to the detriment of any other portfolio. Each of the portfolios of Account No. 2 will have its assets transferred to a corresponding Fund portfolio with identical policies and restrictions. That fact should preclude any liquidation of assets of the portfolios of Account No. 2 or the Fund. Applicants therefore represent that none of the portfolios of Account No. 2 or the Fund will incur any extraordinary costs, such as brokerage commissions, in effecting the transfer of assets. Further, Applicants note that none of the porfolios of Account No. 2 or the Fund bear any reorganization costs, and, therefore, there are no disparate results created by reorganization expenses.

Applicant state that the exchange of portfolio securities of each of the portfolios of Account No. 2 for corresponding Fund shares will be effected on the same basis, in conformity with Section 22(c) of the Act and Rule 22c-1 thereunder. Thus, Applicants assert there will be no dilution of value for any of the portfolios of Account No. 2 or for the Fund. In addition, Applicants state that although the voting rights under the new structure will be different from the voting rights under the separate account structure, they believe these rights, in all fundamental respects, will be unaffected. Applicants assert that, for all practical purposes, participants will have the same voting power regardless of which structure is utilized.

III. Request for an Order Pursuant to Section 6(c) from Sections 26(a)(2) and 27(c)(2)

Applicants request an order pursuant to Section 6(c) of the 1940 Act, granting exemptions from Sections 26(a)(2)(C) and 27(c)(2) of the 1940 Act to the extent necessary to permit the Company to

continue to deduct, from the net assets of each sub-account of the UIT, following the reorganization, the mortality risk charge and the distribution expense charge currently deducted from Account No. 2 in connection with its variable annuity contracts ("Contracts").

Applicants state that the Company assumes mortality risks under the Contracts by virtue of guaranteed annuity rates incorporated into the Contracts. To compensate for these risks, the Company has made a deduction each day at an anuual rate of 0.35% of the net assets of each portfolio in Account No. 2. The Application states that, similarly, the Company wishes to make a daily charge to the value of the net assets of each subaccount of the UIT at an annual rate of 0.35%.

Applicants state that the Company does not impose a sales charge at the time of purchase of a Contract or upon surrender of or withdrawals from the Contract. The Company, however, makes a deduction each day from the net assets of each portfolio in Account No. 2 for expenses associated with the distribution of the Contracts at an annual rate of 0.35%.

Applicants assert that the mortality risk charge is reasonable in amount as determined by industry practice with respect to comparable annuity products. The Company states that this representation is based upon an analysis made by the Company of publicly available information about selected similar industry products, taking into consideration such factors as current charges for the mortality risks, the existence of charge guarantees, and guaranteed annuity purchase rates. The Company represents that, as a condition for this relief, it will maintain at its principal office and make available to the Commission the memorandum and other documents used to support this representation. Applicants also represent that as a condition of this relief, Account No. 2 will invest only in an underlying mutual fund which undertakes to have a board of directors with a disinterested majority formulate and approve any plan under Rule 12b-1 of the Act to finance distribution expenses. Finally, Applicants state that the Company had concluded that its distribution financing arrangements will benefit Account No. 2 and its participants, and that the basis for this conclusion is set forth in a memorandum which will be maintained by the Company at its principal office and which will be available to the Commission.

With respect to the distribution expense charge, Applicants submit that the deduction of such charge at a rate which is a very small fraction of the permitted front-end sales load charge (no such charge is being imposed on the Contracts) is much more favorable to the participants than imposition of a sales load of the permitted amount. Applicants state that the absolute aggregate amounts of the deductions from participants' accounts should be less under the distribution expense charge format than the aggregate amount of premium deductions which would be made under a sales load format; and, because of the small amounts which will be deducted during the lives of the Contracts for distribution expenses, more money will be made available for investment for the benefit of participants. Applicants state that the Company will monitor the Account to ensure that, with respect to any Participant, the accumulated charges of the .35% distribution fee will not exceed 9% of total contributions.

Notice is further given that any interested person wishing to request a hearing on the application may not later than June 9, 1986, at 5:30 p.m., do so by submitting a written request of the specific issues, if any, of fact or law that are disputed, to the Secretary, Securities and Exchange Commission, Washington, DC 20549. A copy of the request should be served personally or by mail upon Applicants at the address stated above. Proof of service (by affidavit, or in the case of an attorney-at-law, by certificate) shall be filed with the request. After said date, an order disposing of the application will be issued unless the Commission orders a hearing upon request or upon its own motion.

For the Commission, by the Division of Investment Management, pursuant to delegated authority.

John Wheeler,

Secretary.

[FR Doc. 86-11410 Filed 5-20-86; 8:45 am]

BILLING CODE 8010-01-M

[Release No. IC-15098 (811-1628)]

Application for an Order Declaring That Applicant Has Ceased To Be an Investment Company; New America Fund, Inc.

May 15, 1986.

Notice is hereby given that New America Fund, Inc. ("Applicant"), Suite 635, 612 South Flower Street, Los Angeles, California 90017-2885, registered under the Investment Company Act of 1940 ("Act") as a closed-end, non-diversified management investment company, filed an application on February 10, 1986, for an order of the Commission, pursuant to Section 8(f) of the Act, declaring that Applicant has ceased to be an investment company. All interested persons are referred to the application on file with the Commission for a statement of the representations contained therein, which are summarized below, and to the Act for the applicable provisions thereof.

Applicant states that it was organized as a Delaware corporation and that it filed a registration statement pursuant to Section 8(f) of the Act (under its former name, Fund of Letters, Inc.) on March 25, 1968, which became effective on September 20, 1968. Applicant represents that its Board of Directors adopted a Plan of Complete Liquidation and Dissolution ("Plan") which was approved by its stockholders on February 12, 1985. Applicant states that prior to its first distribution in partial liquidation on March 28, 1985, there were 1,805,053 shares outstanding with an aggregate net asset value of $80,539,641. Applicant represents that it had made a total of four liquidating distributions as of February 3, 1986, when it contributed all of its remaining net assets (less than $4 million) to the NAF Liquidating Trust ("Trust") as provided for by the Plan. Any cash not used to meet expenses or liabilities will be distributed to Beneficiaries of the Trust which are the shareholders of record as of January 20, 1986. Applicant states that the Trust will distribute all of its assets to or for the benefit of its shareholders and terminate no later than February 3, 1989. On February 6, 1986, Applicant filed a Certificate of Distribution with Delaware, its state of incorporation.

Applicant states that it now has no assets, debts or outstanding liabilities remaining and that it is not a party to any litigation. Applicant is engaged in an administrative dispute with the California Tax Board involving a past tax liability in the amount of $20,240 plus accrued interest. If Applicant prevails in this proceeding, the cash reserved to meet the claim will be distributed to Beneficiaries of the Trust. Further, Applicant states that it is not engaged, and does not intend to engage, in any activities other than those necessary for the winding-up of its affairs.

Notice is further given that any interested party wishing to request a hearing on the application may, not later than June 9, 1986, at 5:30 p.m., do so by submitting a written request setting forth the nature of his/her interest, the reasons for the request, and the specific issues, if any, of fact or law that are disputed, to the Secretary, Securities and Exchange Commission, Washington, DC 20549. A copy of the request should be served personally or by mail upon the Applicant at the address stated above. Proof of service (by affidavit or, in the case of an attorney-at-law, by certificate) shall be filed with the request. After said date, an order disposing of the application will be issued unless the Commission orders a hearing upon request or upon its own motion.

For the Commission, by the Division of Investment Management, pursuant to delegated authority.

John Wheeler.

Secretary.

[FR Doc. 86-11411 Filed 5-20-86; 8:45 am]

BILLING CODE 8010-01-M

Forms Under Review by Office of Management and Budget

Agency Clearance Officer: Kenneth A. Fogash, (202) 272-2142.

Upon Written Request, Copies Available From: Securities and Exchange Commission, Office of Consumer Affairs and Information Services, 450 Fifth Street NW., Washington, DC 20549.

New

One-Time Mutual Fund Organization Survey; File No. 270-301 One-Time Foreign Bank Broker-Dealer Subsidiaries Survey; File No. 270-301

Notice is hereby given that pursuant to the Paperwork Reduction Act of 1980 (44 U.S.C. 3501 *et seq.*), the Securities and Exchange Commission has submitted for clearance the Commission's one-time surveys of certain mutual fund organizations and certain foreign bank broker-dealer subsidiaries.

Submit comments to OMB Desk Officer: Sheri Fox, Office of Information and Regulatory Affairs, Office of Management and Budget, Room 3235 NEOB, Washington, DC 20503.

Dated: May 15, 1986.

John Wheeler,

Secretary.

[FR Doc. 86-11405 Filed 5-20-86; 8:45 am]

BILLING CODE 8010-01-M

[Release No. 34-23242; File No. SR-Amex-86-13]

Self-Regulatory Organizations; Proposed Rule Change by American Stock Exchange, Inc. Relating To Revision of Its Original Listing Fee Schedule

Pursuant to section 19(b)(1) of the Securities Exchange Act of 1934, 15 U.S.C. 78s(b)(1), notice is hereby given that on May 9, 1986, the American Stock Exchange, Inc. filed with the Securities and Exchange Commission the proposed rule change as described in Items I, II, and III below, which Items have been prepared by the self-regulatory organization. The Commission is publishing this notice to solicit comments on the proposed rule change from interested persons.

I. Self-Regulatory Organization's Statement of the Terms of Substance of the Proposed Rule Change

The American Stock Exchange is proposing to revise its original listing fee schedule (Section 140 of the Company Guide), to reduce the intitial fee charged companies listing on the Exchange. The text of the proposed rule change is available at the Office of the Secretary, American Stock Exchange, Inc., and at the Commission.

II. Self-Regulatory Organization's Statement of the Purpose of, and Statutory Basis for, the Proposed Rule Change

In its filing with the Commission, the self-regulatory organization included statements concerning the purpose of any basis for the proposed rule change and discussed any comments it received on the proposed rule change. The text of these statements may be examined at the places specified in Item IV below. The self-regulatory organization has prepared summaries, set forth in sections A, B, and C below, of the most significant aspects of such statements.

A. Self-Regulatory Organization's Statement of the Purpose of, and the Stautory Basis for, the Proposed Rule Change

(1) Purpose

New listings are the life blood of all markets since a certain percentage of companies will inevitably be lost due to mergers or otherwise go out of existence. While measuring price sensitivity to the listing decision is extremely difficult as fees are only one aspect of the equation, there is reason to believe that the Exchange's existing original listing fee schedule (Section 140 of the Company Guide) is set at an inappropriately high level. The Exchange is proposing to revise its original listing fee schedule to aid its ability to attract listed companies.

The revised fee schedule reduces the initial fee for listing by approximately 35% on average. It also simplifies the method of calculating fees by basing the cost of listing on the number of shares outstanding within set categories up to 100 million shares, thereby eliminating the need to calculate a particular fee using different per share amounts based on the total number of shares to be listed. The schedule is designed to achieve a reasonable balance between the Exchange's need to be competitive, while maintaining a reasonable level of listing revenue.

(2) Basis

The proposed rule change is consistent with section 6(b) in general and furthers the objectives of section 6(b)(4) in particular in that it achieves a reasonable balance between the Exchanges objective of attracting an adequate number of listed companies and its need for a reasonable level of listing revenue. This assures the equitable allocation of reasonable dues, fees, and other charges among Amex members and issuers.

B. Self-Regulatory Organization's Statement on Burden on Competition

The proposed rule change will have no adverse impact on competition. On the contrary, it is intended to enhance competition between markets.

C. Self-Regulatory Organization's Statement on Comments on the Proposed Rule Change Received from Members, Participants or Others

No written comments were solicited or received with respect to the proposed rule change.

III. Date of Effectiveness of the Proposed Rule Change and Timing for Commission Action

The foregoing rule change has become effective pursuant to section 19(b)(3) of the Securities Exchange Act of 1934 and subparagraph (e) of Securities Exchange Act Rule 19b-4. At any time within 60 days of the filing of such proposed rule change, the Commission may summarily abrogate such rule change if it appears to the Commission that such action is necessary or appropriate in the public interest, for the protection of investors, or otherwise in furtherance of the purposes of the Securities Exchange Act of 1934.

IV. Solicitation of Comments

Interested persons are invited to submit written data, views and arguments concerning the foregoing. Persons making written submissions should file six copies thereof with the Secretary, Securities and Exchange Commission, 450 Fifth Street, NW., Washington, DC 20549. Copies of the submission, all subsequent amendments, all written statements with respect to the proposed rule change that are filed with the Commission, and all written communications relating to the proposed rule change between the Commission and any person, other than those that may be withheld from the public in accordance with the provision of 5 U.S.C. 552, will be available for inspection and copying in the Commission's Public Reference Section, 450 Fifth Street, NW., Washington, DC 20549. Copies of such filing will also be available for inspection and copying at the principal office of the above-mentioned self-regulatory organization. All submissions should refer to the file number in the caption above and should be submitted by June 11, 1986.

Dated: May 15, 1986.

Shirley E. Hollis,

Assistant Secretary.

[FR Doc. 86-11459 Filed 5-20-86; 8:45 am]

BILLING CODE 8010-01-M

Self-Regulatory Organizations; Applications for Unlisted Trading Privileges and of Opportunity for Hearing; Midwest Stock Exchange, Incorporated

May 14, 1986.

The above named national securities exchange has filed applications with the Securities and Exchange Commission pursuant to section 12(f)(1)(B) of the Securities Exchange Act of 1934 and Rule 12f-1 thereunder, for unlisted trading privileges in the following stocks:

Gottschalks Inc.
  Common Stock, $.01 Par Value ((File No. 7-8958)
Lionel Corporation
  Common Stock, $.10 Par Value (File No. 7-8959)
Pacific Tin Consolidated Corporation (Delware)
  Common Stock, $1.00 Par Value (File No. 7-8960)
DLP Inc. (Holding Company)
  Common Stock, $7.00 Par Value (File No. 7-8961)
Alberto-Culver Co.
  Class B Common Stock, $.22 Par Value (File No. 7-8962)
Warnaco Inc.
  Class A Common Stock, $.10 Par Value (File No. 7-8963)
American Business Products, Inc. (Georgia)
  Common Stock, $2.00 Par Value (File No. 7-8964)

These securities are listed and registered on one or more other national securities exchange and are reported in the consolidated transaction reporting system.

Interested persons are invited to submit on or before June 4, 1986, written data, views and arguments concerning the above-referenced applications. Persons desiring to make written comments should file three copies thereof with the Secretary of the Securities and Exchange Commission, Washington, DC 20549. Following this opportunity for hearing, the Commission will approve the applications if it finds, based upon all the information available to it, that the extensions of unlisted trading privileges pursuant to such applications are consistent with the maintenance of fair and orderly markets and the protection of investors.

For the Commission, by the Division of Market Regulation, pursuant to delegated authority.

John Wheeler,

Secretary.

[FR Doc. 86-11407 Filed 5-20-86; 8:45 am]

BILLING CODE 8010-01-M

[Release No. 34-23234; File No. SR-NASD-86-8]

Self-Regulatory Organizations; Order Approving Rule Change by National Association of Securities Dealers, Inc.

The National Association of Securities Dealers, Inc. ("NASD") on April 1, 1986 submitted a proposed rule change pursuant to section 19(b)(1) of the Securities Exchange Act of 1934 ("Act") to amend the Rules of Practice and Procedures for the Small Order Execution System ("SOES") and to modify the SOES facilities description in order to improve the efficiency of transactions in NASDAQ securities.

As modified, the SOES facilities description provides that unpreferenced orders entered in SOES will be executed in rotation against a SOES Market Maker only if its current quotation is best in SOES, that is, at or nearest to the best bid or offer currently displayed in the NASDAQ system. Previously, unpreferenced orders entered in SOES were executed in rotation against all active SOES Market Makers at the best price displayed in NASDAQ without regard to the market maker's current quotation in NASDAQ.

As amended, paragraph (c)(1)(B) of the SOES Rules of Practice and Procedures permit a SOES Order Entry Firm that is also a SOES Market Maker to enter in SOES self-preferenced orders. Previously, this conduct was prohibited.

Notice of the proposed rule change was given in Securities Exchange Act Release No. 23099 (51 FR 12430; Aprill 10, 1986). No comments on the proposed rule change were received.

The Commission finds that the proposed rule change is consistent with the requirements of the Act and rules and regulations thereunder applicable to the NASD and, in particular, sections 11Aa(1)(B), 11A(a)(1)(C)(i), 15A(b)(6), and 17A(a)(1)(B) and (C) of the Act and the rules and regulations thereunder. The rule change encourages the dissemination of competitive quotes in NASDAQ, while continuing to assure the execution of customer orders at the inside market. In addition, it enables smaller member firms that do not operate internal automated order routing and execution systems to take advantage of the processing and transaction reporting efficiencies of SOES by entering self-preferenced orders.

It is therefore ordered, pursuant to section 19(b)(2), that the above-mentioned proposed rule change be, and it hereby is, approved.

For the Commission, the the Division of Market Regulation, pursuant to delegated authority, 17 CFR 200.30-3(a)(12).

Dated: May 14, 1986.

Shirley E. Hollis,

Assistant Secretary.

[FR Doc. 86-11460 Filed 5-20-86; 8:45 am]

BILLING CODE 8010-01-M

[Release No. IC-15104; File No. 812-6264]

Central Securities Corporation; Application

May 15, 1986.

Notice is hereby given that Central Securities Corporation ("Applicant"), 375 Park Avenue, New York, New York 10022, a closed-end management investment company registered under the Investment Company Act of 1940 ("Act"), filed an application on December 19, 1985, for an order of the Commission pursuant to section 6(c) of the Act exempting Applicant from the provisions of section 2(a)(3)(D) of the Act in connection with Applicant's proposed purchases of limited partnership interests in various limited partnerships. All interested persons are referred to the application of file with

the Commission for a statement of the representations contained therein, which are summarized below, and to the Act and rules thereunder for the text of the applicable provisions thereof.

Applicant states that as of June 20, 1985, it had total investments of approximately $100 million, with $82 million invested in portfolio securities of unaffiliated issuers, $3.5 million invested in a controlled affiliate, $.8 million invested in other affiliates and $13.7 million invested in short-term obligations. Although Applicant has historically invested nearly all of its assets in common stocks issued by corporations, the application states that Applicant also seeks opportunities to invest from time to time in limited partnerships as a limited partner.

Applicant contends that if it were to become a limited partner of a limited partnership, the partnership and any partner of the partnership, and their respective affiliated persons could be deemed to be affiliated persons of Applicant (or affiliated persons of such persons) by virtue of section 2(a)(3)(D) of the Act, which defines an "affiliated person" of another person as "any officer, director, *partner, co-partner*, or employee of such other person." (Emphasis added.)

Applicant believes that if the limited partnership and its partners (other than Applicant) and their respective affiliated persons were affiliated persons of the Applicant (or affiliated persons of such persons) they would be subject to the provisions of section 17(a) and 17(d) of the Act and Rule 17d-1 thereunder, which would prohibit or severely restrict certain affiliated and joint transactions. Accordingly, absent exemptive relief, the partnership, its partners (other than Applicant) and their respective affiliates could not make investments, except in certain limited situations, in any enterprise in which Applicant or a company affiliated with Applicant was also an investor. Moreover, the partnership and each partner and their respective affiliates would need to check every party to every investment or other transaction they planned to make regardless of its nature, in order to ensure that Applicant or an affiliated company was not a party to such investment or transaction.

Applicant states that if it were to acquire a limited partnership interest any such investment would be limited to less than 5% of the equity of the partnership and would be made solely for investment purposes. Applicant will also limit its investment in limited partnerships to those in which (a) the management is vested exclusively in the general partner(s) and (b) it will have no power to control the affairs of the partnership or of the general partner(s).

According to the application, the relief sought relates solely to the terms "partner" and "copartner" appearing in section 2(a)(3)(D) of the Act. Furthermore, Applicant recognize that any transaction involving affiliated persons of Applicant (other than a limited partnership or its partners solely by reason of their status as such) or affiliated persons of such persons on the one hand, and Applicant or its affiliates, on the other hand, will continue to be subject to the limitations contained in sections 17 (a) and (d) of the Act and the rules and regulations thereunder notwithstanding issuance of the order requested. The exemptive relief sought is not directed to, nor limited to, any specific transaction but is general and prospective in character.

Notice is further given that any interested person wishing to request a hearing on the application may, not later than June 9, 1986, at 5:30 p.m. do so by submitting a written request setting forth the nature of his/her interest, the reasons for his request, and the specific issues, if any, of fact or law that are disputed, to the Secretary, Securities and Exchange Commission, Washington, DC 20549. A copy of the request should be served personally or by mail upon Applicant at the address stated above. Proof of service (by affidavit or, in the case of an attorney-at-law, by certificate) shall be filed with the request. After said date on order disposing of the application will be issued unless the Commission orders a hearing upon request or upon its own motion.

For the Commission, by the Division of Investment Management, pursuant to delegated authority.

Shirley E. Hollis,

Assistant Secretary.

[FR Doc. 86-11461 Filed 5-20-86; 8:45 am]

BILLING CODE 8010-01-M

[Release No. IC-15105; File No. 813-62]

First Boston Investment Limited Partnership No. 3, et al.; Application and Opportunity for Hearing

May 15, 1986.

Notice is hereby given that First Boston Investment Limited Partnership No. 3, a New York limited partnership (the "Partnership"), and FBGP, Inc., its general partner ("General Partner", collectively "Applicants"), Park Avenue Plaza, New York, New York 10055, filed an application on November 26, 1985, and an amendment thereto on March 14, 1986,[1] for an order of the Commission pursuant to sections 6(b) and 17(d) of the Act and Rule 17d-1 thereunder exempting the Partnership from the provisions of section 17(d) of the Act and Rule 17d-1 thereunder to the extent necessary to permit an arrangement whereby the Partnership, an "employees' securities company" as defined in the Act, and all similar partnerships offered to the same class of limited partner investors (such partnerships together with the Partnership, "Partnerships") would invest concurrently in the common stock of leveraged buy-out entities with a leveraged buy-out partnership organized by First Boston, Inc. ("FBI").

Applicants state that the Partnerships have been and will be formed to invest in risk capital opportunities, and have previously been granted an order (the "Prior Order") exempting them from all Sections of the Act other than certain sections, including section 17(d) (with certain exceptions) (Investment Company Act Release No. 14567, August 15, 1985). All interested persons are referred to the application on file with the Commission for a statement of the representations contained therein, which are summarized below, and to the Act and the rules thereunder for the text of all applicable provisions thereof.

According to the application, FBI has recently formed a New York general partnership with a major United States insurance company, in which the insurance company owns a 99% interest and FBI, through a wholly-owned subsidiary ("FBLBO"), owns a nominal 1% interest (the "LBO Partnership"). Applicants state that the LBO Partnership was formed for the limited purpose of providing the "mezzanine" level financing at attractive rates for leveraged buy-out transactions arranged or sponsored by FBI and its affiliates (collectively, "First Boston") and to provide the insurance company partner the opportunity to participate in both the equity and debt portions of every leveraged buy-out arranged or sponsored by First Boston. Applicants further state that the LBO Partnership's committed capital is substantially in excess of $100,000,000 and that the capital will be contributed by the two partners in accordance with their respective partnership interests (99-1), and net gains or losses will be allocated to the partners in accordance with their partnership interests.

[1] By letter dated May 1, 1986, counsel for Applicants modified certain language in the application for purposes of classification. The language of the notice reflects these changes.

Applicants state that the principal investments of the LBO Partnership will be long-term debt and perferred stock, as well as a portion of the common stock purchased in each such leveraged buy-out acquisition. Applicants propose that in each instance where the LBO Partnership invests in common stock of a leveraged buy-out sponsored by First Boston, the then current Partnership or Partnerships will generally be offered the opportunity to purchase from the leveraged buy-out entity 50% of the amount of common stock purchased by the LBO Partnership, in each case on the same terms and at the same share price as so purchased by the LBO Partnership.

Applicants request an exemption from section 17(d) of the Act and Rule 17d-1 thereunder to permit the Partnerships to co-invest with the LBO Partnership in the situations described above. Applicants state that this exemption is requested because, due to the LBO Partnership's substantial capital (of which FBI is only contributing a nominal one percent), it is likely that the Partnerships will be offered opportunities to co-invest in such leveraged buy-outs in amounts exceeding 40% of their total assets, the co-investment amounts currently permitted in the Prior Order for situations of this type (the "40% of Assets Limitation"). Thus, Applicants request an exception from the 40% of Assets Limitation with request to co-investments made with the LBO Partnership in the common stock of leverage buy-out entities sponsored, structured or arranged by First Boston, to permit the Partnerships to co-invest up to 80% of their total assets in these leveraged buy-out opportunities. Applicants state that this exemption is requested subject to the proviso that the additional 40% of assets which would then be available for co-investment would only be co-invested in leveraged buy-out opportunities with the LBO Partnership and, in each such leveraged buy-out co-investment, the affiliated parties (i.e., a Partnership or Partnerships and the LBO Partnership) will purchase their respective shares of common stock at the same per share price and on the same terms.

Applicants state that management of the LBO Partnership is vested in FBLBO, which is responsible for managing the day-to-day affairs of the LBO Partnership, as well as all recordkeeping and other operational functions. According to the application, there is a five member LBO Partnership Committee, however, which oversees the approval of all acquisitions and dispositions of securities by the LBO Partnership. Three of its members are appointed by FBLBO, and two are appointed by the insurance company partner. Applicants state that unless a greater vote is required, all actions by the LBO Partnership Committee selecting investments require a majority vote.

In support of their request for exemption, Applicants represent that the General Partner, a wholly-owned subsidiary of FBI, must own at least 70% of the capital of each Partnership. Thus, in all instances where there would be a co-investment by virtue of FBI's nominal interest in the LBO Partnership, FBI would also be investing substantial amounts through the Partnerships by virtue of its minimum 70% interest. Applicants further represent that the investment committee of the board of directors of the General Partner of the purchasing Partnerships will make a determination at the time of such investment, to be recorded in the minutes of the meeting, that the terms of such investment by the investing Partnerships do not involve overreaching of those Partnerships on the part of any person concerned, including the LBO Partnership. Applicants state that the General Partner also undertakes to obtain in each such co-investment situation a commitment from the LBO Partnership not to dispose of its common stock interest in the LBO entity without giving sufficient, but not less than one day's, notice to the General Partner so that the Partnerships have the opportunity to dispose of their common stock interest in the LBO entity concurrently. Applicants further state that all such shares of common stock purchased by a Partnership will be consistent with the investment policies of that Partnership.

Applicants represent that the proposed arrangement, subject to the aforementioned conditions, is consistent with the provisions, policies and purposes of the Act and is designed to insure that participation by the Partnerships with the LBO Partnership in the acquisition of common stock will be on the same basis, and on terms not less advantageous than that offered to other participants in any leveraged buy-out acquisition where such co-investment may occur.

Notice is further given that any interested person wishing to request a hearing on the application may, not later than June 6, 1986, at 5:30 p.m., do so by submitting a written request setting forth the nature of his interest, the reasons for his request, and the specific issues, if any, of fact or law that are disputed, to the Secretary, Securities and Exchange Commission, Washington, DC 20549. A copy of the request should be served personally or by mail upon Applicants at the address stated above. Proof of service (by affidavit or, in the case of an attorney-at-law, by certificate) shall be filed with the request. After said date an order disposing of the application will be issued unless the Commission orders a hearing upon request or upon its own motion.

For the Commission, by the Division of Investment Management, pursuant to delegated authority.

Shirley E. Hollis,

Assistant Secretary.

[FR Doc. 86-11462 Filed 5-20-86; 8:45 am]

BILLING CODE 8010-01-M

[Release No. 15102; (812-6356)]

Sequoyah-XI Limited Partnership et al.; Application for Exemption of Three-Tier Real Estate Limited Partnership

May 15, 1986.

Notice is hereby given that Sequoyah-XI Limited Partnership ("Partnership"), Sequoyah-Sumter Limited Partnership and Sequoyah-Hilton Head Limited Partnership ("Middle-Tier Partnerships"), Sequoyah Financial Corporation, ("SFC") and Charles T. Carlisle, Jr. ("Carlisle") (Partnership, Middle-Tier Partnerships, SFC and Carlisle, collectively, "Applicants"), 1200 Plaza Tower, Knoxville, TN 37929, filed an application on April 24, 1986, for an order pursuant to section 6(c) of the Investment Company Act of 1940 ("Act"), exempting Applicants from all provisions of the Act. All interested persons are referred to the application on file with the Commission for a statement of the representations contained herein, which are summarized below, and to the Act for the applicable provisions thereof.

According to the application, the Partnership was formed on January 1, 1986, under the District of Columbia Uniform Limited Partnership Act ("Partnership Act") as a vehicle for equity investment in government-assisted rental housing pursuant to a "three-tier" arrangement. The Middle-Tier Partnerships, which will serve as conduits for the Partnership's investments, are also District of Columbia limited partnerships and were formed on October 1, 1985. Sumter Villas Limited Partnership and the Hilton Head Garden Limited Partnership ("Local Limited Partnership"), both Georgia limited partnerships, were formed on October 31, 1985, and will

invest directly in the rental housing. Applicants represent that the Partnership is organized pursuant to an arrangement whereby a 1% general partner interest in the limited partnership is held by SFC (.01%), Carlisle (.215%) and Sequoyah General Corporation (.775%) ("General Partners"), and a 99% limited partnership interest will be held by the anticipated investors (98.25%) and Prudential Bache Properties, Inc. (.75%). SFC will act as managing general partner to the Partnership and each Middle-Tier Partnership. Applicants further represent that the Partnership has a 99% limited partner interest and a .99% general partner interest in the Middle-Tier Partnership, and each Middle-Tier Partnership has, in turn, a 98.99% limited partner interest in one Local Limited Partnership. Thus, Applicants submit that for purposes of control and other rights, as well as for purposes of beneficial ownership of the Local Limited Partnerships, the Partnerships investment in each Local Limited Partnership through the applicable Middle-Tier Partnership is tantamount to direct investment by the Partnership in each Local Limited Partnership. Applicants state that the Partnership, the Middle-Tier Partnerships and the Local Limited Partnerships are organized as limited partnerships in order to provide investors with both liability limited to their capital investments and the ability to claim on their tax returns the deductions, losses, credits, and other tax items that originate from the Partnership's interest in the Local Limited Partnerships.

According to the application, the Partnership has invested, through the applicable Middle-Tier Partnership, in the Local Limited Partnerships, each of which is the beneficial owner of one government assisted apartment complex acquired by the Local Limited Partnerships on December 30, 1985 ("Developments"). The Developments are operated for low or moderate income families and individuals. Through its investment in the Local Limited Partnerships, the Partnership intends to realize (i) a potential increase in its equity in the Developments through amortization of the Developments' mortgage indebtedness, (ii) cash flow from operations, (iii) potential appreciation in the value of the Developments, (iv) cash distributions from sale or refinancing of the Developments and (v) certain tax benefits.

In reliance upon Regulation D and Rule 506 under section 4(2) of the Securities Act of 1933, the Partnership plans to offer 104 units of limited partnership interest ("Units") at $50,000 per Unit. Purchasers of Units will become limited partners of the Partnership ("Limited Partners"). Prudential-Bache Securities Inc. will act as selling agent for the offering of Units and subscriptions for half Units may be accepted at the sole discretion of the Partnership's General Partners.

Applicants state that the form of subscription agreement for Units provides that each subscriber must represent, among other things, either that (1) for each Unit purchased the purchaser has either a net worth (exclusive of home, home furnishings and automobiles) in excess of $175,000 for each Unit purchased and anticipates that some part of the purchaser's income (without regard to the investment) through 1990 would be subject to federal income tax, under current law, at the rate of 42% or more, or (2) the subscriber has either (a) a net worth, or joint net worth with his or her spouse, in excess of $1,000,000 as of the date of the subscription agreement, or (b) had individual gross income (exclusive of gross income of his or her spouse) in excess of $200,000 in 1984 and 1985, and reasonably expects to have individual gross income (exclusive of gross income of his or her spouse) in excess of $200,000 in 1986, or (c) will purchase at least $150,000 of the security being offered, where the total purchase price does not exceed 20% of his or her net worth at the time of the sale, or joint net worth with his or her spouse. According to the application, any prospective transferee of a Unit will be required to make substantially similar representations in writing to the Partnership as to investment suitability.

Applicants assert that the three-tier arrangement described above is desirable and appropriate to secure potential tax advantages which result from the acquisition of the Developments having occurred in 1985, while facilitating marketing of the Middle-Tier Partnerships' investments in both Local Limited Partnerships. Applicants state that subsequent to the acquisition of the Developments by the Local Limited Partnerships, it was determined that interests in both Local Limited Partnerships should be sold in a single offering. Applicants further state that it was not deemed feasible for the Partnership to replace the Middle-Tier Partnerships directly as the limited partner in each of the Local Limited Partnerships as a means to achieve this result. According to the application, such a change of the limited partner holding a 98.99% interest in each Local Limited Partnership would have resulted in the termination, for federal tax purposes, of each of the Local Limited Partnerships after January 1, 1986. Such tax terminations after January 1, 1986, would have potentially forfeited certain tax benefits available under current law as a result of the acquisition of the Developments having occurred in 1985. Forfeiture of these tax benefits would result if tax reform legislation passed by the U.S. House of Representatives were to be enacted into law. Applicants assert that the use of such three-tier arrangement is able to achieve the result of offering investments in both Developments in a single offering without this potentially adverse tax result because the charge made in the partners of the Middle-Tier Partnerships to include the Partnership does not result in the tax termination of the Local Limited Partnerships.

Applicants represent that the Partnership's Agreement of Limited Partnership ("Partnership Agreement") and its Private Placement Memorandum ("Memorandum") will contain numerous provisions designed to ensure fair dealing by the General Partners with the Partnership's Limited Partners. Applicants state that all potential conflicts of interest between the General Partners and the Limited Partners will be disclosed in the Memorandum, including the receipt of commissions, fees, and other compensation by the General Partners and their affiliates. Applicants believe that all such compensation is fair and on terms no less favorable to the Partnership than would be the case if such arrangements had been made with independent third parties. Applicants further state that the Memorandum, the Partnership Agreement and the partnership agreements of the Middle-Tier Partnerships will contain various provisions designed to eliminate or significantly reduce potential conflicts of interest. According to the application, the Partnership Agreement will provide that a majority in interest of the Limited Partners may, without the concurrence of the General Partners: (1) Amend the Partnership Agreement (with certain restrictions); (2) remove any General Partner and elect a replacement (unless the removed General Partner was the sole remaining General Partner); and (3) dissolve the Partnership; provided that such actions shall not be effective until the Partnership has received an opinion of counsel that such action is permitted by the Partnership Act and will not impair the limited liability of the Limited Partners or adversely affect the

classification of the Partnership as a partnership for federal income tax purposes.

Without conceding that the Partnership is an investment company as defined in the Act, Applicants request exemption from all provisions thereof. Applicants submit that the contemplated arrangement is not susceptible to abuses of the sort the Act was designed to remedy. Applicants state that the investment suitability standards, the requirements for fair dealing provided by the Partnership's and the Middle-Tier Partnerships' governing instruments, and pertinent governmental regulations imposed on the Local Limited Partnerships by the federal government, provide protection to investors in Units comparable to and perhaps greater than that provided by the Act. Applicants further submit that the Partnership, by investing in government assisted housing owned by the Local Limited Partnerships, furthers the congressionally declared national housing goal of providing a decent home and a suitable environment for every American family.

Notice is further given that any interested person wishing to request a hearing on the application may, not later than June 9, 1986, at 5:30 p.m., do so by submitting a written request setting forth the nature of his interest, the reasons for his request, and the specific issues, if any, of fact or law that are disputed, to the Secretary, Securities and Exchanged Commission, Washington, DC 20549. A copy of the request should be served personally or by mail upon Applicant(s) at the address stated above. Proof of service (by affidavit or, in the case of an attorney-at-law, by certificate) shall be filed with the request. After said date, an order disposing of the application will be issued unless the Commission orders a hearing upon request or upon its own motion.

For the Commission, by Division of Investment Managemnent, pursuant to delegated authority.

Shirley E. Hollis

Assistant Secretary.

[FR Doc. 86-11463 Filed 5-20-86; 8:45 am]

BILLING CODE 8010-01-M

[Release No. IC-15103; File No. 812-6295]

National Bank of Canada; Application

May 15, 1986.

Notice is hereby given that National Bank of Canada ("Applicant") filed an application on January 31, 1986, c/o Abraham L. Zylberberg, Esq., Sage Gray Todd & Simms, Two World Trade Center—100th Floor, New York, New York 10048, pursuant to section 6(c) of the Investment Company Act of 1940 ("Act"), for an order of the Commission exempting Applicant and a proposed Delaware finance corporation to be wholly owned by Applicant ("Proposed Subsidiary") from all provisions of the Act. All interested persons are referred to the application on file with the Commission for a statement of the representations made therein, which are summarized below, and to the Act for a statement of the relevant provisions thereof.

Applicant is a Canadian chartered bank which directly and through subsidiary and affiliated companies operates a network of offices in Canada and around the world. Applicant states that its principal activities are substantially similar to those conducted by a large American bank. The applications states that the business of banking in Canada is a matter of federal jurisdiction and is extensively regulated by the Bank Act of 1980 ("Bank Act") which governs in detail the organization, powers, and activities of each Canadian chartered bank.

According to the application, the Proposed Subsidiary will be a corporation organized under the laws of the State of Delaware. All of the issued and outstanding shares of capital stock of the Proposed Subsidiary will be owned by Applicant. It is intended that the principal business of the Proposed Subsidiary will be the raising of funds for Applicant and wholly-owned subsidiaries of Applicant. Accordingly, substantially all of the Proposed Subsidiary's assets will consist of accounts receivable from Applicant and its wholly-owned subsidiaries.

Applicant proposes to issue U.S. dollar denominated short term promissory notes commonly known as commercial paper ("Notes"). The Notes would either be issued directly by the Applicant or would be issued by the Proposed Sudsidiary. Notes issues by the Applicant will be direct and unconditional obligations of Applicant, and Notes issued by the Proposed Subsidiary will be direct and unconditional obligations of the Proposed Subsidiary and will be unconditionally guaranteed by Applicant. The Notes will have those characteristics, including maturity and minimum denomination, which will enable them to qualify for the exemption from registration under section 3(a)(3) of the Securities Act of 1933 ("1933 Act"). Applicant does not propose to register the Notes or cause the Proposed Subsidiary to register the Notes of any guarantees thereof under the 1933 Act. However, neither Applicant nor the Proposed Subsidiary will offer or sell any Notes in the United States until Applicant has received a written opinion of its U.S. legal counsel to the effect that the Notes and any guarantee thereof are entitled to the section 3(a)(3) exemption. Applicant does not request the Commissions' review or approval of such opinion.

Applicant states that the Notes, and any future issue by it or the Proposed Subsidiary of securities in the United States, will have received, prior to issuance, one of the three highest short-term investment grade ratings from at least one nationally-recognized statistical rating organization, and Applicant's U.S. legal counsel shall have certified in writing that such rating has been received. No such rating will be obtained, however, if, in the opinion of Applicant's legal counsel, an exemption from registration is available under section 4(2) of the 1933 Act after due consideration of the doctrine of "integration".

Notes issued by Applicant will be direct liabilities of Applicant and will park *pari passu* among themselves and equally with all other unsecured, unsubordinated indebtedness of Applicant, including deposit liabililties other then indebtedness to the United States, Canada or any province of Canada. The Notes issued by Applicant will rank prior to any subordinated indebtedness of Applicant and to the rights of shareholders.

Notes issued by the Proposed Subsidiary will be direct liabilities of the Proposed Subsidiary and will rank *pari passu* among themselves and equally with all other unsecured, unsubordinated indebtednes of the Proposed Subsidiary other than indebtedness to the United States. The Notes will rank prior to any subordinated indebtedness of the Proposed Subsidiary and to the rights of shareholder. The guarantees by Applicant of notes issued by the Proposed Subsidiary will rank *pari passu* among themselves and equally with all other unsecured, unsubordinated indebtedness of Applicant, including deposit liabilities other than indebtedness to the United States, Canada or any province of Canada. The guarantees will rank prior to any subordinated indebtedness of Applicant and to the rights of shareholders.

The Notes will be sold through one or more of the major registered securities dealers experienced in the marketing of commercial paper to the types of institutional and other sophisticated

investors that ordinarily participate in the United States commercial paper market, and the Notes will not be advertised or otherwise offered for sale to the general public. Applicant undertakes on behalf of itself and the Proposed Subsidiary to ensure that each dealer in the United States through which the Notes are sold will provide to each offeree who has indicated an interest in the Notes, and prior to any sale of the Notes to such offeree, a memorandum which describes Applicant's business and, where appropriate, the Proposed Subsidiary's business and contains a balance sheet and income statement of Applicant and, where appropriate, the Proposed Subsidiary for the most recent fiscal year and, as publicly available, for the most recent fiscal quarter. The memorandum and financial statements will be as comprehensive as those customarily used in commercial paper offerings in the United States, will describe any material applicable to chartered banks and generally accepted U.S. accounting principles applicable to commercial banks and will be updated periodically to reflect material changes in the financial status of Applicant and, where appropriate the Proposed Subsidiary.

While it has no present intention of doing so, Applicant may in the future offer, or cause the Proposed Subsidiary to offer, other debt securities for sale in the United States. Any such future offering will be made only pursuant to a registration statement under the 1933 Act or pursuant to an applicable exemption from registration, and will be made on the basis of a disclosure document appropriate and customary for such registration or exemption, and in any event as comprehensive as those used in offerings of similar debt secutiries by U.S. issuers in the United States. Applicant undertakes on behalf of itself and, where appropriate, on behalf of the Proposed Subsidiary, such a disclosure document will be provided to each offeree who has indicated an interest in such securities prior to any sale of such securities to such offeree.

In connection with the issuance and sale of the Notes, Applicant and the Proposed Subsidiary will appoint a bank or trust company having an office in New York City as issuing agent. Applicant and the Proposed Subsidiary will expressly submit to the jurisdiction of those New York State and Federal courts which sit in the City and County of New York for the purpose of any suit, action or proceeding brought on the Notes or with respect to the offer or sale of the Notes or the guarantees of the Notes issued by the Proposed Subsidiary and, in that connection, will appoint an agent to accept service of process in any such suit, action or proceeding, and an agent to accept service of process will be continuously maintained, until all amounts due and to become due in respect of the Notes or the guarantees have been paid or set aside. However, the foregoing will not restrict the right of any holder of a Note to bring suit in any court having jurisdiction over Applicant or the Proposed Subsidiary by virtue of the offer and sale of the Notes, the guarantees or otherwise. Applicant on behalf of itself and the Proposed Subsidiary represents that each will be subject to suit in any other court in the United States which shall have jurisdiction over Applicant or the Proposed Subsidiary by virtue of the manner of the offering of the Notes or the guarantees of the Notes issued by the Proposed Subsidiary, any future offerings or the guarantees in connection therewith or otherwise. Applicant and the Proposed Subsidiary will also, in connection with any future offering of their debt securities in the United States, appoint and maintain an agent for service of process and submit to the jurisdiction of New York State and Federal courts to the same extent as with respect to the Notes.

Applicant consents on behalf of itself and the Proposed Subsidiary to any order of exemption requested pursuant to section 6(c) being expressly conditioned upon Applicant's and the Proposed Subsidiary's compliance with the foregoing undertakings. Applicant believes that the exemption requested is necessary and appropriate in the public interest and consistent with the protection of investors and with the purposes fairly intended by the policy provisions of the Act.

Notice is further given that any interested person wishing to request a hearing on the application may, not later than June 9, 1986, at 5:30 p.m., do so by submitting a written request setting forth the nature of his interest, the reasons for his request, and the specific issues, if any, of fact or law that are disputed, to the Secretary, Securities and Exchange Commission, Washington, DC 20549. A copy of the request should be served personally or by mail upon Applicant at the address stated above. Proof of service (by affidavit or, in the case of an attorney-at-law, by certificate) shall be filed with the request. After said date an order disposing of the application will be issued unless the Commission orders a hearing upon request or upon its own motion.

For the Commission, by the Division of Investment Management, pursuant to delegated authority.

Shirley E. Hollis,

Assistant Secretary.

[FR Doc. 86-11464 Filed 5-20-86; 8:45 am]

BILLING CODE 8010-01-M

[Release No. 35-24095]

Filings Under the Public Utility Holding Company Act of 1935 ("Act")

May 15, 1986.

Notice is hereby given that the following filing(s) has/have been made with the Commission pursuant to provisions of the Act and rules promulgated thereunder. All interested persons are referred to the application(s) and/or declaration(s) for complete statements of the proposed transaction(s) summarized below. The application(s) and/or declaration(s) and any amendment(s) thereto is/are available for public inspection through the Commission's Office of Public Reference.

Interested persons wishing to comment or request a hearing on the application(s) and/or declaration(s) should submit their views in writing by June 9, 1986 to the Secretary, Securities and Exchange Commission, Washington, DC 20549, and serve a copy on the relevant applicant(s) and/or declarant(s) at the addresses specified below. Proof of service (by affidavit, or in case of an attorney at law, by certificate) should be filed with the request. Any request for hearing shall identify specifically the issues of fact or law that are disputed. A person who so requests will be notified of any hearing, if ordered, and will receive a copy of any notice or order issued in the matter. After said date, the application(s) and/or declaration(s), as filed or as amended, may be granted and/or permitted to become effective.

Kentucky Power Company (70-6921)

Kentucky Power Company ("Kentucky"), a subsidiary of American Electric Power Company, Inc., a registered holding company, has filed a post-effective amendment with his Commission pursuant to sections 6 (a), (b) and 7 of the Act and Rules 50(a)(2) and 50(a)(5) thereunder.

By order dated February 26, 1986, HCAR No. 24032, Kentucky was authorized to issue notes to banks of up to $40 million at any one time outstanding through January 1, 1987.

Kentucky now proposes that it be authorized tc issue and sell a combination of commercial paper and notes in the same aggregate principal amount of $40 million for the same period.

American Electric Power Company, Inc., et al. (70-7183)

American Electric Power Company, Inc. ("AEP"), a registered holding company, and its wholly owned service company, American Electric Power Services Corporation ("AEPSC"), 1 Riverside Plaza, Columbus, Ohio 43215, have filed a post-effective amendment, pursuant to sections 6(a), 7 and 12(b) of the Act and Rule 45 thereunder, to the previously filed joint application-declaration.

AEPSC procures virtually all required insurance protection for the AEP system companies. AEPSC is required to provide Insurance Company of North America ("INA") with an irrevocable letter of credit in favor of INA in order to secure certain unfunded liabilities of AEPSC covered by a general and automobile INA insurance program. By order dated December 13, 1985 (HCAR No. 23948), AEPSC was authorized to obtain such letter of credit, and AEP was authorized to guarantee AEP's obligations, up to a maximum amount of $21 million.

INA subsequently informed AEPSC that certain unfunded liabilities totalling $13,776,506, secured in prior years by surety bonds, would now have to be collateralized by letter of credit. It is therefore requested that the $21 million limitation previously authorized be increased to $35 million to reflect these additional unfunded liabilities.

Alabama Power Company (70-7212)

Alabama Power Company ("Alabama"), 600 North 18th Street, Birmingham, Alabama 35291, an electric utility subsidiary of The Southern Company, a registered holding company, has filed an application pursuant to section 6(b) of the Act and Rule 50(a)(5) thereunder.

Alabama has entered into a Firm Power Purchase Contract ("Power Contract") with Alabama Municipal Electric Authority ("AMEA") which obligates Alabama to supply specified amounts of capacity to AMEA for a term of fifteen years and AMEA to pay to Alabama a one-time capacity payment in the amount of $100,000,000. The power contract also provides that in the event Alabama breaches its obligation to provide such capacity, AMEA is entitled to liquidated damages from Alabama. In order to secure the payment of such liquidated damages, Alabama proposes to issue its Liquidated Damages Note. The amount of liquidated damages payable thereunder is set forth in a schedule to the note, with a maximum principal amount of $113,300,000 and descending amounts thereafter. In order to secure its performance under the note, Alabama proposes to issue $113,300,000 principal amount of its first mortgage bonds which Alabama will deposit with an escrow agent. Neither the note nor the bonds will bear any interest unless and until a default occurs under the Power Contract. In such event, the note and the bonds will bear interest at a rate equal to the highest rate borne by AMEA's bonds issued by it to finance the purchase of capacity under the Power Contract. Based upon current market conditions, such a rate is expected to be approximately 8%. Upon Alabama's performance of its obligations under the power contract and the decline of the balance payable under the note, the escrow agent will deliver annually to Alabama to commensurate amount of the bonds for cancellation.

Consolidated Natural Gas Company, et al. (70-7258)

Consolidated Natural Gas Company ("Consolidated"), a registered holding company, and its subsidiaries, Consolidated Natural Gas Service Company, Inc., CNG Coal Company, CNG Energy Company, CNG Research Company, Four Gateway Center, Pittsburgh, Pennsylvania 15222; The Peoples Natural Gas Company, Two Gateway Center, Pittsburgh, Pennsylvania 15222; Consolidated Gas Transmission Corporation, Consolidated System LNG Company, 445 West Main Street, Clarksburg, West Virginia 26301; CNG Producing Company, One Canal Place, Suite 3100, New Orleans, Louisiana 70130; West Ohio Gas Company, 504 Colonial Building, Lima, Ohio 45802; CNG Development Company, One Park Ridge Center, P.O. Box 15746, Pittsburgh, Pennsylvania 15244; The East Ohio Gas Company, The River Gas Company, 1717 East Ninth Street, Cleveland, Ohio 44114; Hope Gas, Inc., and Union National Center West, Clarksburg, West Virginia 26301 ("subsidiary companies"), have filed an application-declaration subject to sections 6, 7, 9(a), 9(c), 10, and 12 of the Act and Rules 43, 45(a), 45(b)(1) and 50(a)(3) thereunder.

The applicants-declarants propose to establish a System Money Pool ("Pool") to be administered by Consolidated Natural Gas Service Company, Inc. The Pool will consist of funds that may be loaned on a short-term basis to those subsidiary companies which have a need for short-term funds, other than Consolidated.

Consolidated will be a participant not a borrower. After satisfaction of the borrowing needs of the subsidiary companies and after any possible prepayments of outstanding indebtedness, Consolidated Natural Gas Service Company, Inc., as agent of the Pool, will invest excess funds and allocate the earnings among those applicants-declarants providing such excess funds.

Potomac Edison Company (70-7259)

The Potomac Edison Company ("PE"), Downsville Pike, Hagerstown, Maryland 21740, an electric utility subsidiary of Allegheny Power System, Inc., a registered holding company, has filed a declaration with this Commission pursuant to sections 6, 7 and 12(c) of the Act and Rules 42 and 50 thereunder.

PE proposes, on or prior to December 31, 1986, to issue and sell up to $30 million of new preferred stock, by competitive bidding, in one or more series. In the event that competitive bidding is impractical or undersirable due to market conditions, the size of any series or other conditions, PE, proposes, subject to authorization by the Commission by further order, either to privately place the stock with institutional investors or to negotiate with underwriters for the sale of the stock.

Consolidated Natural Gas Company, et al. (70-7260)

Consolidated Natural Gas Company ("Consolidated"), a registered holding company, and its subsidiaries, Consolidated Natural Gas Service Company, Inc., CNG Coal Company, CNG Energy Company, CNG Research Company, The Peoples Natural Gas Company, Four Gateway Center, Pittsburgh, Pennsylvania 15222, Consolidated Gas Transmission Corporation, Consolidated System LNG Company, 445 West Main Street, Clarksburg, West Virginia 26301, CNG Producing Company, One Canal Place, Suite 3100, New Orleans, Louisiana 70130, West Ohio Gas Company, 504 Colonial Building, Lima, Ohio 45802, CNG Development Company, One Park Ridge Center, P.O. Box 15746, Pittsburgh, Pennsylvania 15244, The East Ohio Gas Company, The River Gas Company, 1717 East Ninth Street, Cleveland, Ohio 44114, Hope Gas, Inc. and Union Natural Gas Center West, Clarksburg, West Virginia 26301, have filed an application-declaration subject to sections 6(a), 7, 9(a), 10 and 12(b) of the Act and Rules 43, 45 and 50 thereunder.

Consolidated proposes to finance its subsidiary companies as follows:

(a) Consolidated, in order to meet inventory gas financing and working capital requirements, proposes to issue and sell from time to time through June 15, 1987, short-term bearer notes to Merrill Lynch Money Market, Inc., a dealer in commercial paper, in a maximum principal amount of $300 million outstanding at any one time.

(b) If it becomes impractical to issue commercial paper, Consolidated proposes to make short-term bank borrowings from time to time through June 15, 1987. Consolidated would borrow (i) from Chase Manhattan Bank, N.A. ("Chase") up to an aggregate principal amount of $75 million at any one time outstanding, and (ii) from Citibank, N.A. ("Citibank") up to an aggregate principal amount of $50 million at any one time outstanding.

(c) Consolidated also proposes to borrow from time to time through June 15, 1987, up to $175 million from banks on its unsecured promissory notes.

(d) In addition, Consolidated proposes to make, from time to time, through June 15, 1987, open account advances not exceeding $570 million at any one time outstanding to the subsidiary companies set forth below up to the following principal amounts:

Company	Amount
CNG Development Co.	$50,000,000
CNG Energy Co.	5,000,000
CNG Producing Co.	135,000,000
Consolidated Gas Transmission Corp.	100,000,000
Consolidated Natural Gas Service Co.	7,000,000
Hope Gas, Inc.	20,000,000
The East Ohio Gas Co.	190,000,000
The Peoples Natural Gas Co.	55,000,000
The River Gas Co.	2,000,000
West Ohio Gas Co.	6,000,000
Total	$570,000,000

In order to have outstanding at any one time up to $300 million aggregate principal amount of short-term notes, Consolidated seeks to have the 5% limitation under section 6(b) of the Act raised to 32% from the order date through June 15, 1987.

(e) Consolidated further proposes, to make long-term loans from time to time through June 15, 1987, of up to $93,750,000 to the subsidiary companies set forth below up to the following principal amounts:

Company	Amount
CNG Producing Co	$31,875,000
Consolidated Gas Transmission	38,080,000
Hope Gas, Inc.	4,107,500
The East Ohio Gas Co	9,375,000
The Peoples Natural Gas Co.	9,375,000
West Ohio Gas Co	937,500
Total	93,750,000

(f) Consolidated also proposes to make through June 15, 1987 revolving credit allowances not exceeding $214,500,000 at any one time outstanding to the subsidiary companies set forth below up to the following principal amounts:

Company	Amount
CNG Development Co	$16,000,000
CNG Producing Co	98,000,000
Consolidated Gas Transmission Corp	30,000,000
The East Ohio Gas Co	50,000,000
The Peoples Natural Gas Co	20,000,000
The River Gas Co.	500,000
Total	214,500,000

The Columbia Gas System, Inc. (70-7261)

The Columbia Gas System, Inc. ("Columbia"), a registered holding company, 20 Montchanin Road, Wilmington, Delaware 19807, has filed an application pursuant to sections 9(a)(1) and 10 of the Act.

Colombia proposes to acquire 13,333 shares of common stock of ACE Limited ("Limited") a Cayman Islands corporation, for an anticipated purchase price of $150 per share, or an aggregate purchase price not exceeding $2 million. Limited owns all of the common stock of Ace Insurance Company, Ltd. ("ACE"), a Cayman Islands insurance company organized to underwrite general liability and directors' and officers' liability insurance. Columbia requests authorization to subscribe to shares in Limited in order to replace amounts of liability insuracne no longer available to the Columbia system. In order to obtain insurance from ACE, which will not be a licensed insurer in the United States, nonsponsor policyholders must subscribe for shares of Limited's common stock in an amount equal to a percentage of the policyholder's gross first-year premium. Columbia states that its proposed ownership interest in Limited will be less than 1%. As a participant in ACE, Columbia's liability would be limited to its capital investment in Limited in the event that ACE incurs underwriting losses in excess of accumulated capital and surplus.

For the Commission, by the Division of Investment Management, pursuant to delegated authority.

Shirley E. Hollis,

Assistant Secretary.

[FR Doc. 86-11465 Filed 5-20-86; 8:45 am]

BILLING CODE 8010-01-M

SMALL BUSINESS ADMINISTRATION

Reporting and Recordkeeping Requirements Under OMB Review

ACTION: Notice of reporting requirements submitted for review.

SUMMARY: Under the provisions of the Paperwork Reduction Act (44 U.S.C. Chapter 35), agencies are required to submit proposed reporting and recordkeeping requirements to OMB for review and approval, and to publish a notice in the **Federal Register** notifying the public that the agency has made such a submission.

DATE: Comments should be submitted within 21 days of this publication in the **Federal Register.** If you intend to comment but cannot prepare comments promptly, please advise the OMB Reviewer and the Agency Clearance Officer before the deadline.

Copies: Copies of forms, request for clearance (S.F. 83), supporting statements, instructions, and other documents submitted to OMB for review, may be obtained from the Agency Clearance Officer. Submit comments to the Agency Clearance Officer and the OMB Reviewer.

FOR FURTHER INFORMATION CONTACT:

Agency Clearance Officer: Richard Vizachero, Small Business Administration, 1441 L Street NW., Room 200, Washington, D.C. 20416, Telephone: (202) 653-8538.

OMB Reviewer: Patricia Aronsson, Office of Information and Regulatory Affairs, Office of Management and Budget, New Executive Office Building, Washington, D.C. 20503, Telephone: (202) 395-7231.

Title: Health Benefits Survey

Frequency: Non recurring

Description of Respondents: Data on the relative costs of health benefits in small and large firms are needed to evaluate the effect of current and proposed federal programs.

Annual Responses: 1,000

Annual Burden Hours: 400

Type of Request: New collection

Title: Liability Certificate

Form No.: SBA 856

Frequency: Extension

Description of Respondents: This form is prepared by the licensee and is used during the course of SBIC examinations by audit personnel.

Annual Responses: 500

Annual Burden Hours: 500

Type of Request: Extension

Dated: May 15, 1986.

Richard Vizachero,

Chief, Administrative Procedures and Documentation Section, Small Business Administration.

[FR Doc. 86-11414 Filed 5-20-86; 8:45 am]

BILLING CODE 8025-01-M

[License No. 04/04-0118]

Affiliated Investment Fund, Ltd.; License Surrender

Notice is hereby given that Affiliated Investment Fund, Ltd., 225 Shurfine Drive, College Park, Georgia 30337, has surrendered its license to operate as a small business investment company under the Small Business Investment Act of 1958, as amended (the Act). Affiliated Investment Fund, Ltd. was licensed by the Small Business Administration on September 24, 1975. Under the authority vested by the Act and pursuant to the regulations promulgated thereunder, the surrender of the license was accepted on May 2, 1986, and accordingly, all rights, privileges, and franchises derived therefrom have been terminated.

(Catalog of Federal Domestic Assistance Program No. 59.011, Small Business Investment Companies)

Dated: May 14, 1986.

Robert G. Lineberry,

Deputy Associate Administrator for Investment.

[FR Doc. 86-11415 Filed 5-20-86; 8:45 am]

BILLING CODE 8025-01-M

[License No. 01/01-0302]

Transatlantic Capital Corp.; License Surrender

Notice is hereby given that Transatlantic Capital Corporation, 185 Devonshire Street, Boston, Massachusetts 02110 has surrendered its license to operate as a small business investment company under the Small Business Investment Act of 1958, as amended (the Act). Transatlantic Capital Corporation, was licensed by the Small Business Administration on October 24, 1979.

Under the authority vested by the Act and pursuant to the Regulations promulgated thereunder, the surrender was accepted on May 7, 1986, and accordingly, all rights, privileges, and franchises derived therefrom have been terminated.

(Catalog of Federal Domestic Assistance Program No. 59.011, Small Business Investment Companies)

Robert G. Lineberry,

Deputy Associate Administrator for Investment.

[FR Doc. 86-11416 Filed 5-20-86; 8:45 am]

BILLING CODE 8025-01-M

DEPARTMENT OF TRANSPORTATION

Office of the Secretary

Proposed Revocation of Certificates of United Air Carriers, Inc., d.b.a. National Airlines, Inc., or Overseas National Airways

AGENCY: Department of Transportation, Office of the Secretary.

ACTION: Notice of order to show cause, (Order 86-5-59), Dockets 36840, 41336, and 41627.

SUMMARY: The Department of Transportation is directing all interested persons to show cause why it should not issue an order revoking the certificates of United Air Carriers, Inc. d/b/a National Airlines, Inc., or Overseas National Airways, issued under sections 401 and 418 of the Federal Aviation Act.

DATES: Persons wishing to file objections should do so no later than June 5, 1986.

ADDRESSES: Responses should be filed in Dockets 36840, 41336, and 41627 and addressed to the Documentary Services Division, Department of Transportation, 400 7th Street SW., Room 4107, Washington, DC 20590 and should be served on the parties listed in Attachment A to the order.

FOR FURTHER INFORMATION CONTACT: Carol A. Szekely, Special Authorities Division, P-47, U.S. Department of Transportation, 400 7th Street SW., Washington, DC 20590, (202) 755-3812.

Dated: May 15, 1986.

Matthew V. Scocozza,

Assistant Secretary for Policy and International Affairs.

[FR Doc. 86-11413 Filed 5-20-86; 8:45 am]

BILLING CODE 4910-62-M

DEPARTMENT OF THE TREASURY

[Department Circular—Public Debt Series—No. 19-86]

Treasury Notes of May 31, 1988, Series Z-1988

Washington, May 15, 1986.

1. Invitation for Tenders

1.1. The Secretary of the Treasury, under the authority of Chapter 31 of Title 31, United States Code, invites tenders for approximately $9,750,000,000 of United States securities, designated Treasury Notes of May 31, 1988, Series Z-1988 (CUSIP No. 912827 TR 3), hereafter referred to as Notes. The Notes will be sold at auction, with bidding on the basis of yield. Payment will be required at the price equivalent of the yield of each accepted bid. The interest rate on the Notes and the price equivalent of each accepted bid will be determined in the manner described below. Additional amounts of the Notes may be issued to Government accounts and Federal Reserve Banks for their own account in exchange for maturing Treasury securities.

2. Description of Securities

2.1. The Notes will be dated June 2, 1986, and will accrue interest from that date, payable on a semiannual basis on November 30, 1986, and each subsequent 6 months on May 31 and November 30 through the date that the principal becomes payable. They will mature May 31, 1988, and will not be subject to call for redemption prior to maturity. In the event any payment date is a Saturday, Sunday, or other nonbusiness day, the amount due will be payable (without additional interest) on the next-succeeding business day.

2.2 The Notes are subject to all taxes imposed under the Internal Revenue Code of 1954. The Notes are exempt from all taxation now or hereafter imposed on the obligation or interest thereof by any State, any possession of the United States, or any local taxing authority, except as provided in 31 U.S.C. 3124.

2.3. The Notes will be acceptable to secure deposits of Federal public monies. They will not be acceptable in payment of Federal taxes.

2.4. Notes in registered definitive form will be issued in denominations of $5,000, $10,000, $100,000, and $1,000,000. Notes in book-entry form will be issued in multiples of those amounts. Notes will not be issued in bearer form.

2.5. Denominational exchanges of registered definitive Notes, exchanges of Notes between registered definitive and book-entry forms, and transfers will be permitted.

2.6. The Department of the Treasury's general regulations governing United States securities apply to the Notes offered in this circular. These general regulations include those currently in effect, as well as those that may be issued at a later date.

3. Sale Procedures

3.1. Tenders will be received at Federal Reserve Banks and Branches and at the Bureau of the Public Debt, Washington, DC 20239, prior to 1:00 p.m., Eastern Daylight Saving time, Wednesday, May 21, 1986. Non competitive tenders as defined below will be considered timely if postmarked no later than Tuesday, May 20, 1986, and received no later than Monday, June 2, 1986.

3.2. The par amount of Notes bid for must be stated on each tender. The minimum bid is $5,000, and larger bids must be in multiples of that amount. Competitive tenders must also show the yield desired, expressed in terms of an annual yield with two decimals, e.g., 7.10%. Fractions may not be used. Noncompetitive tenders must show the term "noncompetitive" on the tender form in lieu of a specified yield.

3.3. A single bidder, as defined in Treasury's single bidder guidelines, shall not submit noncompetitive tenders totaling more than $1,000,000. A noncompetitive bidder may not have entered into an agreement, nor make an agreement to purchase or sell or otherwise dispose of any noncompetitive awards of this issue prior to the deadline for receipt of tenders.

3.4. Commercial banks, which for this purpose are defined as banks accepting demand deposits, and primary dealers, which for this purpose are defined as dealers who make primary markets in Government securities and are on the list of reporting dealers published by the Federal Reserve Bank of New York, may submit tenders for accounts of customers if the names of the customers and the amount for each customer are furnished. Others are permitted to submit tenders only for their own account.

3.5. Tenders for their own account will be received without deposit from commercial banks or other banking institutions; primary dealers, as defined above; Federally-insured savings and loan associations; States, and their political subdivisions or instrumentalities; public pension and retirement and other public funds; international organizations in which the United States holds membership; foreign central banks and foreign states; Federal Reserve Banks; and Gvernment accounts. Tenders from all others must be accompanied by full payment for the amount of Notes applied for, or by a guarantee from a commercial bank of a primary dealer of 5 percent of the par amount applied for.

3.6. Immediately after the deadline for receipt of tenders, tenders will be opened, followed by a public announcement of the amount and yield range of accepted bids. Subject to the reservations expressed in section 4, noncompetitive tenders will be accepted in full, and them competitive tenders will be accepted, starting with those at the lowest yields, through successively higher yields to the extent required to attain the amount offered. Tenders at the highest accepted yield will be prorated if necessary. After the determination is made as to which tenders are accepted, an interest rate will be established, at a ⅛ of one percent increment, which results in an equivalent average accepted price close to 100.000 and a lowest accepted price above the original issue discount limit of 99.750. That stated rate of interest will be paid on all of the Notes. Based on such interest rate, the price on each competitive tender allotted will be determined and each successful bidder will be required to pay the price equivalent to the yield bid. Those submitting noncompetitive tenders will pay the price equivalent to the weighted average yield of accepted competitive tenders. Price calculations will be carried to three decimal places on the basis of price per hundred, e.g., 99.923, and the determinations of the Secretary of the Treasury shall be final. If the amount of noncompetitive tenders received would absorb all or most of the offering, competitive tenders will be accepted in an amount sufficient to provide a fair determination of the yield. Tenders received from Government accounts and Federal Reserve Banks will be accepted at the price equivalent to the weighted average yield of accepted competitive tenders.

3.7. Competitive bidders will be advised of the acceptance of their bids. Those submitting noncompetitive tenders will be notified only if the tender is not accepted in full, or when the price at the average yield is over par.

4. Reservations

4.1. The Secretary of the Treasury expressly reserves the right to accpet or reject any or all tenders in whole or in part, to allot more or less than the amount of Notes specified in section 1, and to make different percentage allotments to various classes of applicants when the Secretary considers it in the public interest. The Secretary's action under this Section is final.

5. Payment and Delivery

5.1. Settlement for the Notes allotted must be made at the Federal Reserve Bank or Branch or at the Bureau of the Public Debt, wherever the tender was submitted. Settlement on Notes allotted to institutional investors and to others whose tenders are accompanied by a guarantee as provided in section 3.5. must be made or completed on or before Monday, June 2, 1986. Payment in full must accompany tenders submitted by all other investors. Payment must be in cash; in other funds immediately available to the Treasury; in Treasury bill, notes, or bonds maturing on or before the settlement date but which are not overdue as defined in the general regulations governing United States securities; or by check drawn to the order of the institution to which the tender was submitted, which must be received from institutional investors no later than Thursday, May 29, 1986. In addition, Treasury Tax and Loan Note Otion Depositaries may make payment for the Notes allotted for their own accounts and for accounts of customers by credit to their Treasury Tax or Loan Note Accounts on of before Monday, June 2, 1986. When payment has been submitted with the tender and the purchase price of the Notes allotted is over par, settlement for the premium must be completed timely, as specified above. When payment has been submitted with the tender and the purchase price is under pay, the discount will be remitted to the bidder.

5.2. In every case where full payment has not been completed on time, an amount of up to 5 percent of the par amount of Notes allotted shall, at the discretion of the Secretary of the Treasury, be forfeited to the United States.

5.3. Registered definitive securities tendered in payment for the Notes allotted are not required to be assigned if the new Notes are to be registered in the same names and forms as appear in the registrations or assignments of the securities surrendered. When the new Notes are to be registered in names and forms different from those in the inscriptions or assignments of the securities presented, the assignment should be to "The Secretary of the Treasury for (Notes offered by this circular) in the name of (name and taxpayer identifying number)". Specific instructions for the issuance and delivery of the new Notes, signed by the owner or authorized representatives, must accompany the securities presented. Securities tendered in payment must be delivered at the expense and risk of the holder.

5.4. Registered definitive Notes will not be issued if the appropriate identifying number as required on tax

returns and other documents submitted to the Internal Revenue Service (e.g., an individual's social security number or an employer identification number) is not furnished. Delivery of the Notes in registered definitive form will be made after the requested form or registration has been validated, the registered interest account has been established, and the Notes have been inscribed.

6. General Provisions

6.1. As fiscal agents of the United States, Federal Reserve Banks are authorized, as directed by the Secretary of the Treasury, to receive tenders, to make allotments, to issue such notices as may be necessary, to receive payment for, to issue and deliver the Notes on full-paid allotments, and to maintain, service, and make payment on the Notes.

6.2. The Secretary of the Treasury may at any time supplement or amend provisions of this circular if such supplements or amendments do not adversely affect existing rights of holders of the Notes. Public announcement of such changes will be promptly provided.

6.3. The Notes issued under this circular shall be obligations of the United States, and, therefore, the faith of the United States Government is pledged to pay, in legal tender, principal and interest on the Notes.

Gerald Murphy,

Fiscal Assistant Secretary.

[FR Doc. 86-11543 Filed 5-19-86; 3:10 p.m.]

BILLING CODE 4810-40-M

UNITED STATES INFORMATION AGENCY

Reporting and Information Collection Requirement Under OMB Review

SUMMARY: Under the provisions of the Paperwork Reduction Act (44 U.S.C. Chapter 35), agencies are required to submit proposed or established reporting and recordkeeping requirements to OMB for review and approval and to publish a notice in the **Federal Register** notifying the public that such a submission has been made. USIA is requesting approval of information collection activities in support of the internal monitoring of the Central American Program of Undergraduate Scholarships (CAMPUS).

DATE: Comments must be received by May 31, 1986. If you intend to comment but cannot prepare comments before the deadline, please advise the OMB reviewer and the Agency Clearance Officer promptly.

Copies: Copies of the request for clearance (SF-83), supporting statement, instructions, transmittal letter and other documents submitted to OMB for review may be obtained from the USIA Clearance Officer. Comments on the items listed should be submitted to the Office of Information and Regulatory Affairs of OMB. Attention: Desk Officer for USIA.

FOR FURTHER INFORMATION CONTACT: Agency Clearance Officer, Charles N. Canestro, United States Information Agency, M/M, 301 Fourth Street S.W., Washington, D.C. 20547, telephone (202) 485-8676. OMB Review: Bruce McConnell, Office of Information and Regulatory Affairs, Office of Management and Budget, New Executive Office Building, Washington, D.C. 20503, telephone (202) 395-3785.

SUPPLEMENTARY INFORMATION: Title: Progress Reports of CAMPUS Program. In the interest of sound program administration, USIA is monitoring the CAMPUS Program with the assistance of project directors. Toward this end, project directors will provide the Agency with quarterly student progress reports on all CAMPUS students at the twelve participating colleges and universities.

Dated: May 16, 1986.

Charles N. Canestro,

Federal Register Liaison.

[FR Doc. 86-11468 Filed 5-20-86; 8:45 am]

BILLING CODE 8230-01-M

Sunshine Act Meetings

Federal Register
Vol. 51, No. 98
Wednesday, May 21, 1986

This section of the FEDERAL REGISTER contains notices of meetings published under the "Government in the Sunshine Act" (Pub. L. 94-409) 5 U.S.C. 552b(e)(3).

CONTENTS

	Item
Federal Deposit Insurance Corporation	1
International Trade Commission	2
National Credit Union Administration	3
United States Institute of Peace	4

1

FEDERAL DEPOSIT INSURANCE CORPORATION

Agency Meeting

Pursuant to the provisions of the "Government in the Sunshine Act" (5 U.S.C. 552b), notice is hereby given that at 2:03 p.m. on Thursday, May 15, 1986, the Board of Directors of the Federal Deposit Insurance Corporation met in closed session, by telephone conference call, to: (1) Receive bids for the purchase of certain assets of and the assumption of the liability to pay deposits made in The Citizens State Bank of St. Francis, St. Francis, Kansas, which was closed by the State Bank Commissioner for the State of Kansas on Thursday, May 15, 1986; (2) accept the bid for the transaction submitted by St. Francis State Bank and Trust Company, St. Francis, Kansas, a newly-chartered State nonmember bank; (3) approve the applications of St. Francis State Bank and Trust Company, St. Francis, Kansas, for Federal deposit insurance, for consent to purchase certain assets of and assume the liability to pay deposits made in The Citizens State Bank of St. Francis, St. Francis, Kansas, and for consent to exercise full trust powers; and (4) provide such financial assistance, pursuant to section 13(c)(2) of the Federal Deposit Insurance Act (12 U.S.C. 1823(c)(2)), as was necessary to facilitate the purchase and assumption transaction.

In calling the meeting, the Board determined, on motion of Director C.C. Hope, Jr. (Appointive), seconded by Director Robert L. Clarke (Comptroller of the Currency), that Corporation business required its consideration of the matters on less than seven days' notice to the public; that no earlier notice of the meeting was practicable; that the public interest did not require consideration of the matters in a meeting open to public observation; and that the matters could be considered in a closed meeting pursuant to subsections (c)(6), (c)(8), (c)(9)(A)(ii), and (c)(9)(B) of the "Government in the Sunshine Act" (5 U.S.C. 552b(c)(6), (c)(8), (c)(9)(A)(ii), and (c)(9)(B)).

The meeting was recessed at 2:08 p.m., and at 7:45 p.m. that same day the meeting was reconvened, by telephone conference call, at which time the Board of Directors adopted: (1) A resolution (a) making funds available for the payment of insured deposits made in Saddleback National Bank, Laguna Hills, California, which was closed by the Deputy Comptroller of the Currency, Office of the Comptroller of the Currency, on Thursday, May 15, 1986; (b) accepting the bid of Landmark Bank, La Habra, California, an insured State nonmember bank, for the transfer of the insured and fully secured or preferred deposits of the closed bank; (c) designating Landmark Bank as the agent for the Corporation for the payment of the insured and fully secured or preferred deposits of the closed bank; (d) making funds available for an advance payment to uninsured depositors and other general creditors of the closed bank equal to 65 percent of their uninsured claims; and (2) an Order approving the application of Landmark Bank, La Habra, California, for consent to purchase certain assets of and to assume the liability to pay certain deposits made in Saddleback National Bank, Laguna Hills, California, and for consent to establish the sole office of Saddleback National Bank as a branch of Landmark Bank.

In reconvening the meeting, the Board determined, on motion of Director C.C. Hope, Jr. (Appointive), seconded by Mr. Robert J. Herrmann, acting in the place and stead of Director Robert L. Clarke (Comptroller of the Currency), that Corporation business required its consideration of the matters on less than seven days' notice to the public; that no earlier notice of the meeting was practicable; that the public interest did not require consideration of the matters in a meeting open to public observation; and that the matters could be considered in a closed meeting pursuant to subsections (c)(8), (c)(9)(A)(ii), and (c)(9)(B) of the "Government in the Sunshine Act" (5 U.S.C. 552b(c)(8), (c)(9)(A)(ii), and (c)(9)(B)).

Dated: May 19, 1986.

Federal Deposit Insurance Corporation.

Hoyle L. Robinson,

Executive Secretary.

[FR Doc. 86-11544 Filed 5-19-86; 2:44 pm]

BILLING CODE 6714-01-M

2

INTERNATIONAL TRADE COMMISSION

[USITC SE-86-21]

TIME AND DATE: Tuesday, May 27, 1986, at 10:00 a.m.

PLACE: ROOM 117, 701 E. STREET, NW., WASHINGTON, DC. 20436.

STATUS: OPEN TO THE PUBLIC.

MATTERS TO BE CONSIDERED:

1. Agenda.
2. Minutes.
3. Ratification List.
4. Petitions and Complaints:
   a. Certain Non-Contract Laser Precision Dimensional Measuring Devies and Components Thereof (Docket Number 1312).
5. Investigation 731-TA-270 [Final] (64K Dynamic random access memory components from Japan)—briefing and vote.
6. Investigation 701-TA-255 [Final] and 731-TA-275/277 [Final] (Oil country tubular goods from Argentina, Canada, and Taiwan)—briefing and vote
7. Items left over from previous agenda.

CONTACT PERSON FOR MORE INFORMATION: Kenneth R. Mason, (202) 523-0161.

Kenneth R. Mason,

Secretary.

May 16, 1986.

[FR Doc. 86-11472 Filed 5-19-86; 8:45am]

BILLING CODE 7020-02-M

3

NATIONAL CREDIT UNION ADMINISTRATION

Previously Held Emergency Meeting

TIME AND DATE: 2:15 p.m., Thursday, May 15, 1986.

PLACE: 1776 G Street, NW., Washington, DC 6th Floor.

STATUS: Closed.

MATTER CONSIDERED:

1. Delegation of Authority.

The Board unanimously voted that the Agency business required that a meeting be held with less than the usual seven days advance notice.

The Board unanimously voted to close the meeting under exemptions (8) and (9)(A)(ii). The General Counsel certified that the meeting could be closed under those exemptions.

FOR MORE INFORMATION CONTACT: Rosemary Brady, Secretary of the Board, Telephone (202) 357-1100.

Rosemary Brady

Secretary of the Board.

[FR Doc. 86-11524 Filed 5-19-86; 8:45 am]

BILLING CODE 1535-01-M

4

UNITED STATES INSTITUTE OF PEACE

TIME AND DATE: 9:00 a.m.-5:00 p.m., Tuesday, June 3, 1986.

PLACE: National Courts Building, Room 309 (Courtroom 9), 717 Madison Place NW., Washington, DC 20005.

STATUS: Open (portions may be closed pursuant to subsection (c) of section 552(b) of title 5, United States Coce).

AGENDA (TENTATIVE): Meeting of Board of Directors convened. Matters to be considered: (1) Report on Irish Peace Institute conference; (2) personnel matters; (3) preliminary procedures for the submission, selection, and management of proposals for funding; and (4) essay contest.

CONTACT: Mrs. Olympia Diniak. Telephone: (202) 789-5700.

Dated: May 14, 1986.

Robert F. Turner,

President, United States Institute of Peace.

[FR Doc. 86-11536 Filed 5-19-86; 8:45 am]

BILLING CODE 6820-PA-M

federal register

Wednesday
May 21, 1986

Part II

Department of Health and Human Services

Public Health Service

42 CFR Part 60

Health Education Assistance Loan Program; Notice of Proposed Rulemaking

DEPARTMENT OF HEALTH AND HUMAN SERVICES

Public Health Service

42 CFR Part 60

[PHS-1476]

Health Education Assistance Loan Program

AGENCY: Public Health Service, HHS.

ACTION: Notice of proposed rulemaking.

SUMMARY: This proposed rule would revise existing regulations governing the Health Education Assistance Loan (HEAL) program, authorized by the Public Health Service Act (the Act). These proposed revisions would improve the procedures at schools and lending institutions for making, servicing, and collecting HEAL loans and would clarify the rights and responsibilities of lenders, schools, borrowers, and the Federal Government.

DATE: As discussed below, comments are invited. To be considered, comments must be received by July 21, 1986.

ADDRESSES: Written comments should be addressed to Mr. Thomas D. Hatch, Director, Bureau of Health Professions (BHPr), Health Resources and Services Administration, Room 8-05, Parklawn Building, 5600 Fishers Lane, Rockville, Maryland 20857. All comments received will be available for public inspection and copying at the Office of Program Support, BHPr, Room 7-74, Parklawn Building, 5600 Fishers Lane, Rockville, Maryland, weekdays (Federal holidays excepted) between the hours of 8:30 a.m. and 5:00 p.m.

FOR FURTHER INFORMATION CONTACT: Ms. Peggy Washburn, Chief, Program Development Branch, Division of Student Assistance, BHPr; telephone: 301 443-4540.

SUPPLEMENTARY INFORMATION: On August 26, 1983, the Department published final regulations amending 42 CFR Part 60, which governs the HEAL program. The final regulations incorporated a number of technical changes resulting from the enactment of Pub. L. 97-35, as well as responding to public comments received on the interim-final regulations published on August 13, 1978.

Recent reviews and assessments of the HEAL program by the Department have identified a number of problems in the program's administration. For example, because of the high cost of borrowing under the HEAL program and the large loan amounts that students receive, some HEAL borrowers following graduation may face large debt burdens that they may not be able to repay. In addition to their HEAL indebtedness, many students who receive HEAL loans also receive Health Professions Student Loans, as well as loans under programs administered by the Department of Education. Although a certain level of indebtedness is generally expected for health professions students to complete their education, it has been found the some students borrow in excess of what is required to cover their educational expenses. The proposed regulations would increase each HEAL school's authority and responsibility to limit loan amounts, as school officials would be required to compare the full financial assets of each HEAL applicant with the estimated cost of attendance at the school.

This proposed rule would also impose additional responsibilities on HEAL schools to better prepare students for their responsibilities as HEAL borrowers. HEAL lenders and borrowers are frequently located in different geographic areas and, therefore, many lenders do not conduct personal interviews with HEAL loan applicants. However, since each HEAL loan applicant must be enrolled or accepted for enrollment at a school before applying for a HEAL loan, school officials are able to meet face-to-face with the students. Accordingly, the proposed revisions to the regulations would further enlarge the school's role in the loan-making process and the loan servicing procedures.

The Department has found that some of the loan servicing and collection activities currently employed by lenders have not been effective. Thus, this proposed rule would broaden the debt management responsibilities of the lenders to encourage practices which would more effectively prevent default of HEAL loans and require that each lender follow procedures as stringent as it follows when it makes loans which are not guaranteed.

The Secretary believes that these changes will significantly strengthen the working relationship and cooperation that exists among the borrowers, lenders, schools, and the Department by requiring more active relationships. The Secretary invites public comments on these proposed revisions to the regulations and welcomes suggestions of any additional revisions to strengthen the lenders' debt management and loan collection practices, the schools' role in the program administration, and discourage HEAL borrowers from defaulting on their loans.

This notice of proposed rulemaking does not include the modifications required by Pub. L. 99-129, enacted on October 22, 1985, because the Department intends to publish other regulations to implement those statutory changes.

In addition to the proposed revisions discussed below, the Secretary is considering a proposal to set-aside a percentage of the total insurance authority to be used to provide contracts for lenders with low default rates. There are several methods by which each lender's default rate might be calculated and the set-aside distributed. For example, the average default rate of all lenders might be determined, or the average rate of comprehensive and standard lenders might be calculated separately and set-aside authority distributed to the lenders with default rates below the average. The Secretary believes that this set-aside would be an incentive to every lender to use debt management procedures which would result in the lowest possible default rate. The Secretary invites comments on the set-aside proposal, on the method of calculation of each lender's default rate, and the appropriate percentage of the total authority which should be set-aside for this purpose.

The proposed revisions are summarized below according to the section numbers and titles of the regulations.

Section 60.1 What is the HEAL program?

Paragraph (c) of this section generally discusses the Secretary's role in the HEAL program. This notice proposes to revise that paragraph to indicate that the Secretary will report HEAL loan defaulters to consumer credit reporting agencies and, where appropriate, to the Internal Revenue Service or to the Department of Justice for litigation when pursuing collections on loans assigned to the United States.

Paragraph (d) is proposed to be added as a general penalty warning statement concerning possible consequencies of illegal actions.

Section 60.5 Who is an eligible student borrower?

Section 731(a)(1)(A) of the Act states that a student must agree that all funds received under a HEAL loan must be used solely for tuition, other reasonable educational expenses, including fees, books, and laboratory expenses, and reasonable living expenses. Section 60.5(g), which implements this statutory provision, has been misinterpreted as allowing the use of loan funds for vacation trips and other personal expenses not necessary to attend the

school. The Department intends to prevent such abuse of loan funds by simplifying paragraph (g) to stress the test of reasonableness of education and living expenses, and through other regulatory revisions discussed below. The Department, however, does not wish to prohibit the use of HEAL funds for supplies and equipment which the school considers necessary for all students, and are included as reasonable educational expenses.

Section 60.5(g) is being further amended to delete the provision that a student may receive a HEAL loan to pay interest on HEAL loans. This revision is based on the Department's interpretation of section 731(a)(1)(B) of the statute as indicating that HEAL loans for the payment of interest on HEAL loans are intended for nonstudents who received HEAL loans prior to August 13, 1981, as provided in § 60.6

To ensure that HEAL borrowers do not receive more loan money than is actually needed for education and related expenses, the Secretary proposes that, to be eligible to receive a HEAL loan, a student must demonstrate a financial need. This regulation proposes to require school officials to determine the maximum loan amount by calculating the difference between the costs of the education and all financial assets of the applicant, including student aid or other financial assistance (including income of the applicant, the applicant's spouse, and the applicant's family) that the applicant has received or will receive during the period of the loan. The HEAL program is not limited specifically to students who can qualify for need-based scholarships, nor is it a loan program with interest subsidies. However, sound debt management and the HEAL statute dictate that HEAL funds be used only for educational costs, reasonable living expenses, directly related to the education. This notice would add a new paragraph (h) to this section to indicate this eligibility criterion to be implemented by the HEAL school.

Section 60.7 The loan application process.

Although students applying for HEAL loans are generally considered to be independent, it is recognized that many have spouses who work and many other receive some parental support—either as loans or outright gifts. Thus, in calculating the student's need for a HEAL loan, it is important to consider any student's income that is or can be derived from all sources, including family contributions. The Secretary proposes to insert new paragraphs (a)(2) and (c)(2) to state that each time the applicant seeks a loan, the applicant will be informed of the Federal debt collection activities and must sign a certification statement attesting that he or she has been notified of the actions the lender or the Federal Government can take in the event that the applicant fails to meet the schedule payments. This statement is to be kept by the lender. Paragraphs (a)(4) and (c)(5) are proposed to require that the applicant certify on the application that information provided reflects the applicant's total assets and indebtness. The Secretary proposes to revise paragraph (a)(3)(iii) to provide information on other student assistance which is required in the HEAL application to determine the financial assets of the applicant.

Section 60.8 What are the borrower's major rights and responsibilities?

Currently, the holder is required to notify the borrower of the sale of a loan or the identity of a servicing party other than the lender only if the borrower is required to direct loan payments or other correspondence on loan matters to a new address. The Secretary proposes to revise paragraph (a)(5) of this section to indicate that the borrower must be informed in all cases where the HEAL loan is sold or where the loan is serviced by a party other than the lender. This proposed revision is more fully described in § 60.38 of this preamble.

A second revision to this section involves the borrower's right to forbearance of his or her loan payments. The Secretary believes that the judicious use of forbearance can encourage and assist a borrower to remain in good standing regarding the loan rather than having little choice other than to default. Currently, most lenders and assignees do grant forbearance for situations described in § 60.37, but a few lenders do not. To promote the use of forbearance as a mechanism to avoid default, the Secretary is proposing to require a lender to grant forbearance in some instances. This change is reflected in paragraph (a)(11) of this section and more fully described in § 60.37 of this preamble.

This notice also proposes to revise paragraph (b)(5) of this section to clarify the 5-year prohibition against the discharge of a HEAL loan in bankruptcy contained in section 733(g) of the Act. There has been some confusion in the interpretation of the current regulations since the provision does not specifically prohibit discharge in bankruptcies filed under Chapter 7 or Chapter 13 of the Bankruptcy Act. The Secretary has revised the provision to indicate that the prohibition applies to bankruptcy under any chapter of the Bankruptcy Act.

Section 60.10 How much can be borrowed?

The Secretary believes that permitting a borrower to receive in one lump sum the maximum loan amount for 1 academic year, up to $20,000 for some students, places an unnecessary burden on the student to manage those funds over an entire year and to incur interest unnecessarily. This notice proposes to revise paragraph (a) to allow the borrower to receive under each loan only that amount which is needed over a maximum period of 6 months, reducing the current maximum HEAL loan period of 1 academic year. This change allows the school to verify more frequently the student's continued eligibiity for a HEAL program loan and the student's financial status. The Secretary chooses to specify 6 months rather than a portion of the academic year, such as a semester or quarter, because of the wide variety of academic calendars with which the HEAL program must deal.

Section 60.11 Terms of repayment.

Although the existing regulations permit lenders to establish repayment schedules requiring monthly or less frequent installments, most HEAL lenders have traditionally established repayment schedules requiring monthly installments. The Secretary believes that this practice of establishing monthly repayment schedules is useful in preventing defaults. Therefore, the Secretary proposes to revise paragraph (e) of this section to require monthly repayment schedules.

Paragraph (e) is also revised to specify that the borrower must contact the lender between 30 and 60 days before the commencement of the repayment period. Current regulations state only that this contact occur during the grace period. Another revision proposed allows the lender to establish a monthly repayment schedule with substantially equal installment payments if the borrower does not respond to the contact.

Section 60.14 The insurance premium.

Section 732(c) of the Act authorizes the Secretary to charge each lender an insurance premium for insurance against the default, death, disability of the borrower, or in the event that the loan is discharged in bankruptcy. The lender may pass the cost of the insurance on to the borrower. The Secretary is proposing to continue the current insurance premium and to clarify that it is due to the Secretary on the date of

disburesment of the loan and in all cases must be received by the Secretary within 60 days of disbursement to establish the guarantee of the Federal government, thereby avoiding the withholding of insurance coverage from the lender. For premiums not received within 30 days but received within 60 days of disbursement, the Secretary will charge the lender a late fee on a daily basis at the same rate as the interest rate that the lender charges for the HEAL loan for which the insurance premium is past due. The lender must pay this charge and may not pass it on to the borrower.

The Secretary is proposing to eliminate the requirement in the current regulations for quarterly notifications published in the **Federal Register** when the insurance premium rate remains unchanged by modifying the regulation to state that the rate of the insurance premium shall not exceed the statutory maximum.

Section 60.15 Other charges to the borrower.

In an effort to encourage borrowers to make each installment payment when due, this section is revised to require lenders to charge a late charge when the borrower fails to pay the installment payment within 10 days after its due date. Current regulations state that the lender may charge a late charge. Further, the Secretary has deleted the reference to State law to facilitate program management and to maintain a consistent policy regarding late charges throughout the United States.

Section 60.19 Forms.

This section currently states that all HEAL forms are provided by the Secretary. Several lenders and assignees, particularly the Student Loan Marketing Association, have expressed the desire to print certain HEAL forms for their own use. The Secretary proposes to accept the proposal and to revise this section accordingly.

The Secretary is also proposing to include language which state that any person who knowingly makes a false statement or misrepresentation in a HEAL loan transaction, bribes or attempts to bribe a Federal official, fraudulently obtains a HEAL loan, or commits any other illegal action in connection with a HEAL loan is subject to possible fine and imprisonment under Federal statute.

Section 60.20 The Secretary's collection efforts after payment of a default claim.

The Secretary is proposing to revise this section to incorporate the current reference to the Federal Claims Collection Standards, the OMB Circular A-129, issued May 9, 1985, and the Department's proposed Claims Collection Regulation, published on May 2, 1985 (50 FR 18694).

Section 60.31 The application to be a HEAL lender.

To be a HEAL lender, an eligible organization must submit an application to the Secretary. In addition to the existing requirements, the Secretary is proposing to require each applicant to submit written procedures for approving, servicing and collecting HEAL loans. These procedures must be at least as stringent as the procedures set out in §§ 60.33 through 60.35; however, lenders must use procedures which are as stringent or more stringent than those included in the regulations if the lender has demonstrated the effectiveness of such procedures and if the lender uses those procedures on loans for which the lender has no Federal, State, or other third party guarantee.

Section 60.32 The HEAL lender insurance contract.

This notice proposes to clarify paragraph (a)(2) of this section to specify that HEAL insurance is conditioned on compliance by holders of the loan with the HEAL statute, regulations, and administrative policies established by the Secretary and each lender's own loan management procedures, as submitted to the Secretary under § 60.31. It would also require that the lender's loan management procedures for HEAL program loans be at least as stringent as the procedures used for managing similar loans for which the lender has no Federal, State, or other third party guarantee. This paragraph of the existing regulations references only the requirement for compliance with the regulations.

Paragraph (c)(2) has been added to clarify to lenders that the Secretary will revoke the comprehensive contract of any lender who utilizes procedures inconsistent with HEAL statute, regulations, policies, or its own loan management procedures submitted to the Secretary under § 60.31. However, the Secretary does not wish to penalize those schools and borrowers who rely on the lender for HEAL loans. Consequently, the Secretary may allow the lender to continue to disburse loans, but only under a standard contract until the lender's procedures are in compliance. This paragraph in no way negates any provisions of § 60.43, entitled "*Limitation, suspension, or termination of the eligibility of a HEAL lender.*"

The Secretary also proposes to add new paragraphs (c)(3) (i) and (ii) to this section which would permit the Secretary to set aside a percentage from the total insurance authority to be used to provide contracts for lenders who will make HEAL loans at a rate of interest at least one-half percentage point below the maximum permitted under § 60.13. The amount set aside would be announced in the **Federal Register** and would remain available until March 31 of each fiscal year or until it became exhausted, whichever occurred first. After this date, any amount remaining in the set-aside would be available to any eligible applicant. The Secretary normally acts on lender applications within a week of receipt. In taking action on applications received within this time-frame, the Secretary proposes to approve an application from a reduced rate lender in preference to one from a full-rate lender if there is insufficient authority to approve both.

An insurance contract made to a lender who agreed to make loans at least one-half percentage point below the maximum rate would be in effect only so long as that lender did not exceed this interest rate, and otherwise complied with the terms of its contract with the Secretary. Further, the Secretary believes that it would be helpful to make borrowers and schools aware of the lower interest rate agreed to by the lender and the Secretary so that students could seek HEAL loans from the lender with the lowest interest rates. Thus, lenders would be required to inform the student and the school at the time of application as to the current interest rate ceiling agreed to by the lender and the Secretary.

Section 60.33 Making a HEAL loan.

Current regulations allow the lender to rely in good faith upon statements in the application papers. Proposed revisions in the regulations would limit this reliance to statements which are not in conflict with the report of the applicant's credit history, financial aid transcript(s), or other information available to the lender. Thus, the lender would be required to exercise sound business judgment in its loan-making decisions, including the use of procedures which are at least as stringent as those used for similar loans for which the lender has no Federal, State, or other third party guarantee.

The Secretary proposes to further revise this section to require lenders to determine the applicant's credit worthiness prior to making the HEAL

loan. The Secretary proposes to require that HEAL lenders obtain a report of the applicant's credit history from a national consumer credit reporting agency and a copy of a student applicant's financial aid transcript(s) for use in making this determination. The lender would not be permitted to determine that an applicant is credit worthy if the applicant is currently in default on any loan (commercial, consumer, or educational) or if the applicant is delinquent on any Federal debt(s) until the delinquent account is made current or satisfactory arrangements are made between the affected lender(s) or agency (agencies) and the debtor. The lender must receive a letter from the authorized official(s) of the affected lender(s) or agency (agencies) stating that the borrower has taken satisfactory actions to bring the account into good standing. It is the responsibility of the loan applicant to assure that the lender has received each such letter.

Although existing regulations allow the lender to make the check payable to the student borrower alone, virtually all lenders require that the borrower authorize joint payment of the proceeds. The Department believes that this is proper management of loan funds. Thus, the Secretary also proposes to revise this section to require that the lender disburse the HEAL loan proceeds only by means of a check payable jointly to the student borrower and the HEAL school.

Section 60.34 HEAL loan account servicing.

The Secretary proposes to eliminate late conversion of loans to repayment status. The proposed regulation, therefore, would require lenders to contact borrowers 30 to 60 days before the commencement of the repayment period to establish the terms of repayment, and would provide that lenders may not charge borrowers for the additional interest, penalties, charges, or fees that accrue when a lender does not contact the borrower within this time period and a late conversion results.

To encourage payment of some of the accrued debt or interest at an early stage, the Secretary proposes to add a new paragraph (c) to this section to require lenders to notify the borrower every 6 months of the balance owed for the HEAL loan. The purpose of this notice is to: (1) Make borrowers aware of the significant amount of debt that continues at accrue as interest is compounded; (2) encourage borrowers to make payments prior to the onset of the repayment period; and (3) remind them of the option to pay all or part of the loan at any time without penalty.

Section 60.35 HEAL loan collection.

The Secretary proposes to make a number of changes in the regulations to strengthen the due diligence procedures required of lenders in the collection of loans. These revisions are intended to reduce default claims by increasing efforts to locate and contact delinquent borrowers. Some of these methods have been used successfully by the Secretary in obtaining payment from the borrower during the preclaim assistance and after the Federal Government has paid a default claim to the lender. Therefore, the Secretary proposes that these methods should be instituted by the lender before the claim is filed.

The Secretary proposes to revise § 60.35 to require that lenders contact the borrower who is late in payment and any endorser in writing, as part of each of the four follow-up notices that are now required during the 120-day period of delinquency following the first missed payment of the 120-day period. The second demand notice for a delinquent account shall inform the borrower that the account will be referred to consumer credit reporting agencies if payment is not made. The last contact must also consist of a telephone or personal contact. Currently, § 60.35(a) requires lenders to "attempt to contact" the borrower and endorser.

The Secretary believes that some lenders are not using effective skip-tracing techniques since preclaim assistance has been successful in locating borowers which the lenders claimed were "lost". This revision proposes to require that the lenders use skip-tracing activities which are at least as stringent or more stringent as those used by commercial lenders to locate borrowers delinquent in the repayment of loans for which the lender has no Federal, State, or other third party guarantee. Lenders would be required to use several skip-tracing procedures, such as contacting any school attended by the borrower and checking lists of members of professional associations. The Secretary believes that the borrower is more likely to be located under the proposed procedures.

Further, paragraph (b) is revised to require lenders to request preclaim assistance when a borrower is 90 days delinquent in making a payment. Existing regulations require the lender to make this request when the borrower is 60 days delinquent. The Secretary believes that by allowing the lenders the extra 30 days for their skip-tracing and loan collection activities, many requests for preclaim assistance will be averted.

The Secretary proposes that lenders use collection practices that are as extensive and as effective as those used in the collection of other loans by commercial lenders. The Secretary proposes that lenders: (1) Use collection agents; (2) institute legal proceedings, where possible, against borrowers before filing a default claim; and (3) notify a national consumer credit reporting agency of accounts overdue by more than 60 days.

Section 60.37 Forbearance.

The existing regulations provide that a lender may grant forbearance whenever unemployment, health, other personal problems, or study that is ineligible for deferment temporarily affects the borrower's ability to make scheduled payments on a HEAL loan. The Secretary proposes to revise this section to require that a lender must grant forbearance: (1) Whenever the borrower is temporarily unable to make scheduled payments on a HEAL loan; and (2) whenever the borrower continues to repay the loan in an amount commensurate with his or her ability to repay the loan. The Secretary believes that this proposed revision may prevent a borrower from defaulting on his or her loan because of temporary financial hardship, e.g., a borrower may fully intend to repay the loan, but may be able to make no or only partial payments on the loan during a specific short period of time.

A lender would not be required to grant forbearance, however, if the lender determined that default of the borrower is inevitable and that forbearance would be ineffective in preventing default. In this case, the lender would submit a claim to the Secretary. If the Secretary is not in agreement with the lender, the claim will be returned to the lender as disapproved and the lender would be required to grant forbearance.

Paragraph (b) is proposed to be revised to eliminate the provision that forbearance must be exercised in accordance with the minimum annual payment requirement described in § 60.11(d). Section 60.11(d) provides that the borrower must pay at least the amount of interest that accrues during the year on all of his or her outstanding HEAL loans. In the early years of a typical HEAL loan, the annual repayment requirement consists almost entirely of interest that accrues during the year. As described above, the purpose of forbearance is to temporarily relieve the borrower of a repayment requirement that both the borrower and the lender agree is excessive given the

borrower's circumstances at the time. To maintain the current minimum annual payment requirement would effectively negate the purpose of forbearance; consequently, the Secretary proposes to eliminate it.

Under the proposed regulation, each period of forbearance granted by the lender to any borrower must not exceed 6 months and the total period must not exceed 2 years. However, when the borrower and the lender believe that there are bona fide reasons why this period should be extended, the lender may request a reasonable extension beyond the 2-year period from the Secretary. This request must document the reasons why the extension should be granted. The lender may grant the extension for the approved time period if the Secretary approves the extension request.

Section 60.38 Assignment of a HEAL loan.

The Secretary proposes to revise paragraph (a) of this section to change the buyer's notification requirements. The existing regulations require that the buyer notify: (1) The Secretary of the assignment of a loan within 30 days of the transaction; and (2) the borrower, if the assignment results in the borrower being required to make payments or direct other matters connected with the loan to a party other than the seller.

The Secretary is proposing to expand this notification process by requiring that the buyer notify the following parties in all instances of the assignment within 15 days of the transaction: (1) The Secretary; (2) the borrower; (3) the borrower's school, if the borrower is enrolled in school; and (4) other schools, if known, that the borrower attended while receiving the HEAL loan(s) from the lender.

The Secretary believes that 15 days is sufficient for the buyer to notify the parties. Further, this revision is proposed to make the provision consistent with § 60.7, setting forth the borrower's right to notification of an assignment, and to assist in keeping all interested parties informed of the loan s current status.

Section 60.40 Procedures for filing claims.

Existing regulations provide that insurance claims must be accompanied by the promissory note, the HEAL application, and a history of all payments, and that failure to submit the required documentation may result in the insurance claim not being honored. The proposed revisions would require that the lender comply with the HEAL statute, regulations, and policies. This is consistent with other similar revisions discussed previously under § 60.32.

The Secretary is proposing revisions of paragraphs (c)(1) (i) and (ii) of this section to clarify when the Secretary determines a default claim is eligible for payment and to list the documents minimally required by the Secretary for default claims.

Currently paragraphs (c)(1)(i), (c)(2), and (c)(3) of this section state that the lender has 60 days after the appropriate determination has been made to file a default claim, death claim, or disability claim. The Secretary, however, believes that 10 days is sufficient time to allow the lender to file the claim.

If the lender files a default claim and subsequently receives a notice of the first meeting of creditors, the existing paragraph (c)(1)(iii) of this section does not allow the lender to file a proof of claim with the bankruptcy court. The Secretary believes, however, that it is appropriate for the lender to file both a proof of claim and an objection to the discharge or compromise of the loan if the insurance claim has not been paid when the lender receives the notice. Further, the lender should forward this notice to the Secretary within 10 days. If the Secretary has paid the claim, the Secretary believes that the lender should file a statement to that effect with the court. The Secretary is, therefore, proposing to revise paragraph (c)(1)(iii), accordingly.

A revision proposed to paragraph (c)(2) would require that the lender submit an official copy of the Death Certificate with the death claim. A revision proposed to paragraph (c)(3) would require that the lender submit evidence of the Secretary's determination that the borrower is totally and permanently disabled with the disability claim.

Other revisions are proposed to paragraph (c)(4) of this section which affect the bankruptcy claim. To allow the Secretary sufficient time to initiate appropriate activities, the proposal states that the bankruptcy claim must be filed with the Secretary within 10 days after the lender receives a notice of the first meeting of creditors. Current regulations allow each lender 60 days in which to file the claim, but the Secretary believes 10 days to be sufficient. Further, the existing regulations require the lender to file proof of claim with the bankruptcy court; the Secretary is, however, proposing to require that the lender also file an objection to the discharge or compromise of the HEAL loan.

Section 60.42 Records, reports, and inspection requirements for HEAL lenders.

Paragraph (a)(1) is proposed to be revised to require that lenders maintain easily retrievable records of HEAL borrowers, similar to a requirement which currently exists for records maintained by schools.

As discussed above in § 60.33, the Secretary is proposing to require that, prior to making a loan, the lender determine the credit worthiness of the applicant based on the applicant's credit report and the student applicant s financial aid transcript(s) obtained from the student's school(s). The Secretary is, therefore, proposing to revise paragraph (a)(1) of this section to require that lenders keep records of the evidence of the borrower's credit worthiness, including the borrower's credit report and a copy of the student borrower's financial aid transcript(s).

The Secretary is also proposing that each lender comply with the Department's biennial audit requirements of section 705 of the Act.

Further, the Secretary is proposing that any lender who has information which indicates potential or actual commission of fraud or other offenses against the United States involving these loan funds must promptly provide this information to the appropriate Regional Office of Inspector General for Investigations.

Section 60.50 Which schools are eligible to be HEAL schools?

The Secretary is proposing to modify the list of approved accrediting agencies to reflect the change in the name of the Council of Podiatry Education to the Council of Podiatric Medical Education.

Section 60.51 The student loan application.

The Secretary believes that because of the school's close proximity to the student, as compared with the lender's often distant location, the school is more capable than the lender of assuring that the student fully understands his or her responsibilities under the HEAL program. Consequently, the Secretary is proposing to enlarge the school's role in the loan-making process to require that the school conduct an entrance interview with the student in which information regarding the HEAL loan would be discussed with the student. Where feasible, this interview should be conducted face-to-face, but interview by telephone is permissible. The Secretary proposes to further revise § 60.51 to require that the school: (1) Obtain comprehensive financial aid

transcript(s) on each HEAL applicant and forward a copy of each to the HEAL lender (new paragraph (d)); and (2) attest that it has no reason to believe that the borrower will not, or may not be able to, comply with the repayment requirements of the HEAL loan (new paragraph (e)). The latter requirement would provide the school with an opportunity to indicate to the lender its reservations regarding the likelihood that the borrower will repay, in cases where the school has reason to believe, based on its knowledge of the borrower and his or her circumstances, that the borrower may become a collection problem for the lender.

Also included in this section is the proposed new requirement, as referenced in § 60.5, that the HEAL loan is necessary for the borrower to pursue his or her education at the school by using one of the national need analysis systems or any other procedure approved by the Secretary of Education and published under 34 CFR 674.13 (new paragraph (f)). The Secretary believes that some borrowers may consider the program a source of discretionary money which may be used for any expense. Some borrowers may create a debt burden which is far too great for their future incomes and may then default on these loans when payments become due. Requiring the school to determine the maximum loan amount approvable for each borrower will assist in assuring that each student borrows only what is minimally necessary to pay educational expenses.

Section 60.52 The student's loan check.

The Secretary is proposing to delete the instructions to the school for dealing with checks payable only to the student to be consistent with the changes proposed in § 60.33 which require joint payment of the check. Currently, when a school receives a check payable jointly to the school and the student, the school is allowed to endorse the instrument and transmit it to the student. The Secretary believes that this does not encourage borrowers to use the HEAL money only for educational expenses. Thus, the Secretary is proposing to require that the student endorse the instrument, allow the school to collect money due to it directly, and then give the remaining funds to the student.

Section 60.53 Notification to lender of change in enrollment status.

Currently, this section states that each school must notify the holder of the loan note within 60 days following a change in the student's enrollment status. The Secretary believes, however, that 15 days is sufficient time to allow the school to notify the holder. Also, the Secretary believes that the notice should include the student's full name under which the loan was received, the current name (if different), and other necessary information. The notice, therefore, proposes to revise this section accordingly.

Section 60.56 Records.

As discussed previously, the Secretary is proposing to require a school to maintain complete and accurate records which document its increased activity and responsibility relating to each loan. This notice, therefore, proposes to revise this section accordingly.

The Secretary is also proposing to add a paragraph (c) which would require that the school must comply with the Department's biennial audit requirements of section 705 of the Act.

Section 60.60 Limitation, suspension, or termination of the eligibility of a HEAL school.

Paragraph (c)(1) of this section which referred to § 60.61, a section which did not exist, is deleted.

Section 60.61 Responsibilities of a HEAL school.

As previously discussed, the Secretary is proposing a much broader role with greater responsibilities for each HEAL school. The Secretary proposes to require schools to: (1) Conduct and document an entrance interview with the applicant student to provide information about the HEAL loan; (2) conduct and document an exit interview with the student to assure that the student is informed of all his or her responsibilities as a borrower under the HEAL program; (3) verify the accuracy and completeness of information on the HEAL application by comparing information provided by the student on the HEAL application with information which the student provided on other forms used by the school; (4) develop and utilize procedures for the receipt and disbursement of HEAL loan checks which promote the security of HEAL funds; (5) maintain and safeguard HEAL records; (6) maintain a standard student budget system to be used in the determination of the maximum loan amount approvable; and (7) notify the HEAL lender of changes in student borrower information.

Further, the Secretary is proposing that any school which has information which indicates potential or actual commission of fraud or other offenses against the United States involving these loan funds must promptly provide this information to the appropriate Regional Office of Inspector General for Investigations.

Regulatory Flexibility Act and Executive Order 12291

The Department believes that the resources required to implement the proposed new requirements in these regulations to improve debt management practices and due diligence procedures for making, servicing, and collecting HEAL loans are minimal in comparison to the overall resources of the lenders and the schools. Therefore, in accordance with the requirements of the Regulatory Flexibility Act of 1980, the Secretary certifies that these regulations will not have a significant impact on a substantial number of HEAL lenders and schools.

The Department has also determined that this rule is not a major rule under Executive Order 12291; therefore, a regulatory impact analysis is not required. In addition, the proposed rule will not exceed the threshold level of $100 million established in section (b) of Executive Order 12291.

Paperwork Reduction Act of 1980

Section 60.56(a) contains information collection requirements which have been approved by the Office of Management and Budget (OMB) under section 3507 of the Paperwork Reduction Act of 1980 and assigned control number 0915–0054.

Sections 60.7, 60.8(a)(5) and (b)(3), 60.11(e), 60.14(a)(2), 60.31(c), 60.32(b), 60.32(c)(3)(ii), 60.33(c), (e) and (g), 60.34(b) and (c), 60.35(a)(1) and (2), 60.35(c)(3), 60.37(a), 60.38(a), 60.40(a) and (c)(1), (2), (3) and (4), 60.42(a)(1), (d) and (e), 60.51, 60.51(d) and (f)(2), 60.52(a)(1), 60.53, 60.56(a) and (c), and 60.61(a) and (b) contain information collection requirements which are subject to review by OMB under section 3504(h) of the Paperwork Reduction Act of 1980. We have submitted a copy of this proposed rule to OMB for its review of these information collections. Other organizations and individuals desiring to submit comments on the information collections should direct them to the agency official designated for this purpose whose name appears in this preamble, and to the Office of Information and Regulatory Affairs, OMB, New Executive Office Building (Room 3208), Washington, DC 20503, ATTN: Desk Officer for HHS.

List of Subjects in 42 CFR Part 60

Educational study programs, Health professions, Loan programs—education, Loan programs—health, Medical and

dental schools, Reporting requirements, Student aid.

Accordingly, 42 CFR Part 60 is proposed to be revised as follow:

(*Catalog of Federal Domestic Assistance*, No. 13.108, Health Education Assistance Loan Program)

Dated: January 27, 1986.

Donald Ian Macdonald,

Assistant Secretary for Health.

Approved: March 5, 1986.

Otis R. Bowen,

Secretary.

PART 60—HEALTH EDUCATION ASSISTANCE LOAN PROGRAM

1. The table of contents is revised to read as follows:

Subpart A—General Program Description

Sec.
60.1 What is the HEAL program?

Subpart B—The Borrower

60.5 Who is an eligible student borrower?
60.6 Who is eligible nonstudent borrower?
60.7 The loan application process.
60.8 What are the borrower's major rights and responsibilities?

Subpart C—The Loan

60.10 How much can be borrowed?
60.11 Terms of repayment.
60.12 Deferment.
60.13 Interest.
60.14 The insurance premium.
60.15 Other charges to the borrower.
60.16 Power of attorney.
60.17 Security and endorsement.
60.18 Consolidation of HEAL loans.
60.19 Forms.
60.20 The Secretary's collection efforts after payment of default claim.
60.21 Refunds.

Subpart D—The Lender

60.30 Which organizations are eligible to apply to be HEAL lenders?
60.31 The application to be a HEAL lender.
60.32 The HEAL lender insurance contract.
60.33 Making a HEAL loan.
60.34 HEAL loan account servicing.
60.35 HEAL loan collection.
60.36 Consequence of using an agent.
60.37 Forbearance.
60.38 Assignment of a HEAL loan,
60.39 Death and disability claims.
60.40 Procedures for filing claims.
60.41 Determination of amount of loss on claims.
60.42 Records, reports and inspection requirements for HEAL lenders.
60.43 Limitation, suspension, or termination of the eligibility of a HEAL Lender.

Subpart E—The School

60.50 Which schools are eligible to be HEAL schools?
60.51 The students loan application.
60.52 The student loan check.
60.53 Notification to lender of change in enrollment status.
60.54 Payment of refunds by schools.
Sec.
60.55 Administrative and fiscal procedures.
60.56 Records.
60.57 Reports.
60.58 Federal Access to school records.
60.59 Records and federal access after a school is no longer a HEAL school.
60.60 Limitation, or termination of the eligibility of a HEAL School.

2. The authority citation for Part 60 continues to read as follows:

Authority: Section 215 of the Public Health Service Act, 58 Stat. 690, as amended, 63 Stat. 35 (42 U.S.C. 216); secs. 727–739 of the Public Health Service Act, 93 Stat. 582 (41 U.S.C. 294–294*l*).

3. In § 60.1, paragraph (c) is revised and a new paragraph (d) is added to read as follows:

§ 60.1 What is the HEAL program?

* * * * *

(c) The Secretary insures each lender for the losses it may incur in the event that a borrower dies, becomes disabled, files bankruptcy, or defaults on his or her loan. If a borrower defaults on a loan and the lender has complied with all HEAL statutes, regulations, and administrative policies and the Secretary pays the amount of loss to the lender, the borrower's loan is then assigned to the Secretary. Only at that time, the United States Government becomes the borrower's direct creditor and will actively pursue the borrower for repayment of the debt, including reporting the borrower's default on the loan to national consumer credit reporting agencies or to the Internal Revenue Service for purposes of locating such taxpayer or for income tax refund offset, and referral to the Department of Justice for litigation.

(d) Any person who knowingly makes a false statement or misrepresentation in a HEAL loan transaction, bribes or attempts to bribe a Federal official, fraudlently obtains a HEAL loan, or commits any other illegal action in connection with a HEAL loan is subject to possible fine and imprisonment under Federal statute.

4. In § 60.5, paragraph (g) is revised and a new paragraph (h) is added to read as follows:

§ 60.5 Who is an eligible student borrower?

* * * * *

(g) He or she must agree that all funds received under the proposed loan will be used solely for tuition, other reasonable educational expenses, including fees, books, and laboratory expenses, reasonable living expenses, and the HEAL insurance premium.

(h) He or she must require the loan to pursue the course of study at the school. This determination of the maximum amount of the loan will be made by the school, applying the considerations in § 60.51(f).

5. In § 60.7, paragraphs (a)(2), (a)(4), (c)(2) and (c)(5) are added and existing paragraphs (a)(2), (c)(2) and (c)(3) are redesignated as (a)(3), (c)(3) and (c)(4), respectively, and paragraph (a)(3)(iii) is revised, as follows:

§ 60.7 The loan applicant process.

(a) * * *

(2) The student applicant must be informed of the Federal debt collection policies and procedures in accordance with the Department's proposed Claims Collection Regulation (45 CFR Part 30) prior to the student receiving the loan. The applicant must sign a certification statement attesting that the applicant has been notified of the actions the Federal Government can take in the event that the applicant fails to meet the scheduled payments. This signed statement will be forwarded by the school to the lender and maintained by the lender as part of the borrower's official file.

(3) * * *

(iii) All financial assets of the applicant, including any student aid, familial, spousal, or personal income or financial assistance of which the school or the applicant is aware that would legally or contractually be available to the applicant or that the applicant has received or will receive during the period covered by the proposed HEAL loan.

(4) The student applicant must certify on the application that the information provided reflects the applicant's total assets and indebtedness and that the applicant has no other financial resources that are legally or contractually available to the applicant or that the applicant will receive for the period covered by the proposed HEAL loan.

* * * * *

(c) * * *

(2) The nonstudent applicant must be informed of the Federal debt collection policies and procedures in accordance with the Department's proposed Claims Collection Regulation (45 CFR Part 30) prior to the nonstudent receiving the loan. The applicant must sign a certification statement attesting that the applicant has been notified of the actions the Federal Government and the lender can take in the event that the applicant fails to meet the scheduled payments. This signed statement will be maintained by the lender as part of the borrower's official file.

* * * * *

(5) The nonstudent applicant must certify on the application that the information provided reflects the applicant's total assets and indebtedness.

6. In § 60.8, paragraphs (a)(3), (a)(5), (a)(11), (b)(3) introductory text, and (b)(5) are revised to read as follows:

§ 60.8 What are the borrower's major rights and responsibilities?

(a) * * *

(3) A lender must disburse HEAL loan proceeds as described in § 60.33(f).

* * * * *

(5) If the loan is sold from one lender to another lender, or if the loan is serviced by a party other than the lender, the holder must notify the borrower within 15 days of the transaction.

* * * * *

(11) To assist the borrower in avoiding default, the lender may grant the borrower forbearance. Forbearance, including circumstances in which the lender must grant forbearance, is more fully described in § 60.37.

(b) * * *

(3) The borrower must immediately notify the lender in writing in the event of:

* * * * *

(5) A borrower may not have a HEAL loan discharged in bankruptcy during the first 5 years of the repayment period. This prohibition against the discharge of a HEAL loan applies to bankruptcy under *any* chapter of the Bankruptcy Act, including Chapter 13. A borrower may have a HEAL loan discharged in bankruptcy after the first 5 years of the repayment period only upon a finding by the Bankruptcy Court that the non-discharge of such debt would be unconscionable and upon the condition that the Secretary shall not have waived his or her rights to reduce any Federal reimbursements or Federal payments for health services under any Federal law in amounts up to the balance of the loan.

* * * * *

7. In § 60.10, paragraph (a) introductory text is revised to read as follows:

§ 60.10 How much can be borrowed?

(a) *Student Borrower.* An eligible student may borrow an amount to be used solely for expenses, as described in § 60.5(g) incurred or to be incurred over a period of up to 6 months. The maximum amount he or she may receive for that period shall be determined by the school in accordance with § 60.51 within the following limitations:

* * * * *

8. In § 60.11, paragraph (e) is revised to read as follows:

§ 60.11 Terms of repayment.

* * * * *

(e) *Repayment schedule agreement.* At least 30 and not more than 60 days before the commencement of the repayment period, a borrower must contact the holder of the loan to establish the precise terms of repayment. The borrower may select a monthly repayment schedule with substantially equal installment payments or a monthly repayment schedule with graduated installment payments that increase in amount over the repayment period. If a graduated repayment schedule is established, it may not provide for any single installment that is more than five times greater than any other installment. If the borrower does not contact the lender and does not respond to contacts from the lender, the lender may establish a monthly repayment schedule with substantially equal installment payments, subject to the terms of the borrower's HEAL note.

* * * * *

9. Section 60.14 is amended by revising paragraphs (a)(1), (a)(2), and (b), redesignating (a)(3) and (a)(4) as (a)(4) and (a)(5), respectively, and adding new paragraph (a)(3) to read as follows:

§ 60.14 The insurance premium.

(a) *General.* (1) The Secretary insures each lender of a HEAL loan against losses it may suffer if the borrower defaults on the loan, dies, or becomes totally or permanently disabled, or the loan is discharged in bankruptcy. For this insurance, the Secretary will charge the lender an insurance premium, in an amount to be determined by the Secretary, for the period of time represented by the borrower's combined in-school (exclusive of deferments) and grace period. The insurance premium is due to the Secretary on the date of disbursement of the HEAL loan.

(2) The lender may charge the borrower an amount equal to the cost of the insurance premium. The cost of the insurance premium may be charged to the borrower by the lender in the form of a one-time special charge with no subsequent adjustments required. The lender may bill the borrower separately for the insurance premium or may deduct an amount attributable to it from the loan proceeds before the loan is disbursed. In either case, the lender must clearly identify to the borrower the amount of the insurance premium and the method of calculation.

(3) If the lender does not pay the insurance premium on or before 30 days after disbursement of the loan, a late fee will be charged on a daily basis at the same rate as the interest rate that the lender charges for the HEAL loan for which the insurance premium is past due. The lender may not pass on this late fee to the borrower.

* * * * *

(b) *Rate.* The rate of the insurance premium shall not exceed the statutory maximum.

* * * * *

10. Section 60.15 is amended by revising paragraph (a) to read as follows:

§ 60.15 Other charges to the borrower.

(a) *Late charges.* The lender will require that the borrower pay a late charge if the borrower fails to pay all of a required installment payment within 10 days after it due date or fails to provide written evidence that verifies eligibility for the deferment of the payment. A late charge must be equal to 5 percent of the payment due.

* * * * *

11. Section 60.19 is revised to read as follows:

§ 60.19 Forms.

All HEAL forms are approved by the Secretary and may not be changed without prior approval by the Secretary. HEAL forms shall not be signed in blank by a borrower, a school, a lender, or an agent of any of these. The Secretary may prescribe who must complete the forms, and when and to whom the forms must be sent. All HEAL forms must contain a statement that any person who knowingly makes a false statement or misrepresentation in a HEAL loan transaction, bribes or attempts to bribe a Federal official, fraudulently obtains a HEAL loan, or commits any other illegal action in connection with a HEAL loan is subject to possible fine and imprisonment under Federal statute.

12. The introductory paragraph in § 60.20 is revised to read as follows:

§ 60.20 The Secretary's collection efforts after payments of a default claim.

After paying a default claim on a HEAL loan, the Secretary attempts to collect from the borrower and any valid endorser in accordance with the Federal Claims Collection Standards (4 CFR Parts 101–105), the Office of Management and Budget Circular A–129, issued May 9, 1985, and the Department's proposed Claims Collection Regulation, published on May 2, 1985 (50 FR 18694). The Secretary

attempts collection of all unpaid principal, interest, penalties, administrative costs, and other charges or fees, except in the following situations:

* * * * *

13. Section 60.31 is amended by redesignating paragraph (c) as (d) and adding a new paragraph (c) to read as follows:

§ 60.31 The application to be a HEAL lender.

(c) The applicant must submit to the Secretary its written procedures for making, servicing and collecting HEAL loans. In place of one or more of the procedures outlined in §§ 60.33, 60.34, and 60.35, the applicant must substitute procedures that the applicant considers as stringent or more stringent as those the applicant uses for loans on which it has no Federal, State, or other third party guarantee, but only after the applicant has demonstrated the effectiveness of each procedure and obtained written approval from the Secretary.

* * * * *

14. Section 60.32 is amended by revising paragraph (a)(2), redesignating paragraph (c) as (c)(1), and adding new paragraphs (c)(2) and (c)(3) to read as follows:

§ 60.32 The HEAL lender insurance contract.

(a) * * *

(2) HEAL insurance, however, is not unconditional. The Secretary issues HEAL insurance on the implied representations of the lender that all the requirements for the initial insurability of the loan have been met. HEAL insurance is further conditioned upon compliance by the holder of the loan with the HEAL statute, regulations, and administrative policies and its own loan management procedures submitted to the Secretary under § 60.31. The contract may contain a limit on the duration of the contract and the number or amount of HEAL loans a lender may make or hold. Each HEAL lender has either a standard insurance contract or a comprehensive insurance contract with the Secretary, as described below.

* * * * *

(c) *Comprehensive insurance contract.* (1) * * *

(2) The Secretary will revoke the comprehensive contract of any lender who utilizes procedure which are inconsistent with the statute, regulations, or administrative policies of the HEAL program and require that such lenders disburse HEAL loans only under a standard contract. When the Secretary determines that the lender is in compliance with the HEAL statute, regulations, administrative policies, and its own loan management procedures submitted to the Secretary under § 60.31, the lender may reapply for a comprehensive contract.

(3)(i) From the total insurance authority for any fiscal year the Secretary will set aside a percentage to be used to provide comprehensive contracts to lenders who will make HEAL loans at a rate of interest at least one-half percentage point below the maximum permitted under § 60.13. The Secretary will announce the amount set aside for this purpose by a notice published in the **Federal Register** at or near the beginning of the Federal fiscal year. The amount set aside will remain available for this purpose until March 31 of the announced fiscal year or until it is exhausted, whichever occurs first. Any portion of this amount not used for this purpose by March 31 will be made generally available after March 31. If at any time during the fiscal year, the Secretary receives an application during the same week from a lender who will make a HEAL loan at a rate of interest at least one-half percentage point below the maximum permitted rate and from lender who will make loans at the maximum rate, and there is authority sufficient to enter into only one of the two proposed contracts, the former applicant will receive a contract. A comprehensive contract made with a lender who agrees to make loans at an interest rate at least one-half percentage point below the maximum permissible rate will except from insurance coverage any loan made at a higher interest rate.

(ii) Lenders receiving contracts under paragraph (c)(3)(i) of this section must notify loan applicants and schools at the time of application that they are making HEAL loans at a rate of interest at least one-half percentage point below the maximum permissible.

15. Section 60.33 is amended by revising the introductory paragraph, redesignating paragraphs (c), (d), and (e) as paragraphs (d), (e), and (f), respectively, adding new paragraphs (c) and (g), and revising newly designated paragraphs (e)(1) and (f)(1)(i) to read as follows:

§ 60.33 Making a HEAL loan.

The loan-making process includes the processing of necessary forms, the approval of a borrower for a loan, determination of a borrower's credit worthiness, the determination of the loan amount (not to exceed the amount approved by the school), the explanation to a borrower of his or her responsibilities under the loan, the execution of the promissory note, and the disbursement of the loan proceeds. A lender may rely in good faith upon statements of an applicant and the HEAL school contained in the loan application papers, except where those statements are in conflict with information obtained from the report on the applicant's credit history, financial aid transcript(s), or other information available to the lender. Except where the statements are in conflict with information obtained from the applicant's credit history or other information available to the lender, a lender making loans to nonstudent borrowers may rely in good faith upon statements by the borrower and authorizing officials of internship, residency, or other programs for which a borrower may receive a deferment.

* * * * *

(c) *Lender determination of the borrower's credit worthiness.* The lender may make HEAL loans only to borrowers that the lender has determined to be credit worthy. The lender must determine the applicant's credit worthiness using procedures at least as stringent as the procedures normally used by financial institutions in determining whether to make similar loans for which the lender has no Federal, State, or other third party guarantee. The lender may not determine that an applicant is credit worthy if the applicant is currently in default on any loan (commercial, consumer, or educational) until the delinquent account is made current or satisfactory arrangements are made between the affected lender(s) and the debtor. The lender must receive a letter from the authorized official(s) of the affected lender(s) stating that the borrower has taken satisfactory actions to bring the account into good standing. It is the responsibility of the loan applicant to assure that the lender has received each such letter. No loan may be made to an applicant who is delinquent on any Federal debt(s) until the delinquent account is made current or satisfactory arrangements are made between the affected agency (agencies) and the debtor. The lender must receive a letter from the authorized Federal official(s) of the affected Federal agency (agencies) stating that the borrower has taken satisfactory actions to bring the account into good standing. It is the responsibility of the loan applicant to assure that the lender has received each such letter. The absence of any previous credit, however, is not an indication that the applicant is not credit worthy and is not to be used as a reason to deny the status of credit worthy to an applicant.

The lender must determine the credit worthiness of the applicant using, at a minimum, the following:

(1) A report of the applicant's credit history obtained from a national consumer credit reporting agency;

(2) For student applicants only, financial aid transcript(s) described in § 60.51(d) obtained from an applicant's school(s); and

(3) For student applicants only, the certification made by the applicant's school under § 60.51(e).

* * * * *

(e) *Promissory note.* (1) Each loan must be evidenced by a promissory note approved by the Secretary. A lender must obtain the Secretary's prior approval of the note form before it makes a HEAL loan evidenced by a promissory note containing any deviation from the provisions of the form most currently approved by the Secretary. The lender must give the borrower a copy of each executed note.

* * * * *

(f) * * *

(1) * * *

(i) To a student borrower, by means of a check or draft payable jointly to the student borrower and the HEAL school. Except where a lender is also a school, a lender must mail the check or draft to the school. A lender may not disburse the loan proceeds earlier than is reasonably necessary to meet the cost of education for the period for which the loan is made.

* * * * *

(g) If the lender determines that the applicant is not credit worthy, pursuant to paragraph (c) of this section, the lender must not approve the HEAL loan request. If the applicant is a student, the lender must notify the applicant and the applicant's school named on the application form of the denial of a HEAL loan.

16. Section 60.34 is amended by revising the section title, and paragraph (b)(1), and adding a new introductory paragraph and new paragraphs (c) and (d) to read as follows:

§ 60.34 HEAL loan account servicing.

HEAL loan account servicing involves the proper maintenance of files, and the proper review and management of accounts. Generally accepted account servicing standards ensure that collections are received and accounted for, delinquent accounts are identified promptly, and reports are produced comparing actual results to previously established objectives.

* * * * *

(b) *Conversion of loan to repayment status.* (1) At least 30 and not more than 60 days before the commencement of the repayment period, the lender must contact the borrower in writing to establish the terms of repayment. Lenders may not charge borrowers for the additional interest or other charges, penalties, or fees that accrue when a lender does not contact the borrower within this time period and a late conversion results.

* * * * *

(c) *Borrower contacts.* The lender must notify each borrower by a letter, which has an address correction request on the envelope, of the balance owed for principal, interest, insurance premiums, and any other charges or fees owed to the lender, every 6 months from the time the loan is disbursed. The lender must use this notice to remind the borrower of the option, without penalty, to pay all or part of the principal and accrued interest at any time.

(d) *Skip-tracing.* If, at any time, the lender is unable to locate a borrower, the lender must initiate skip-tracing procedures as described in § 60.35(a)(2).

17. Section 60.35 is amended by revising paragraphs (a) and (b), redesignating paragraphs (c) and (e) as paragraphs (e) and (f), respectively, adding a new paragraph (c), and revising paragraph (d) to read as follows:

§ 60.35 HEAL loan collection.

* * * * *

(a)(1) When a borrower is delinquent in making a payment, the lender must remind the borrower within 15 days of the date the payment was due by means of a letter. If payments do not resume, the lender must contact both the borrower and any endorser at least 3 more times at regular intervals during the 120-day delinquent period following the first missed payment of that 120-day period. The second demand notice for a deliquent account shall inform the borrower that the account shall be referred to consumer credit reporting agencies if payment is not made. Each of the required four contacts must consist of at least a letter which has an address correction request on the envelope. The last contact must consist of a telephone or other personal contact, in addition to the required letter. A record must be made of each attempt to contact and each actual contact, and that record must be placed in the borrower's file. Each contact must become progressively firmer in tone. If the lender is unable to locate the borrower and the endorser at any time during this period when the borrower is delinquent, the lender must initiate the skip-tracing procedures described in paragraph (a)(2) of this section.

(2) If the lender is unable to locate either the borrower or the endorser at any time, the lender must initiate and use skip-tracing activities which are at least as extensive and effective as those used by commercial lenders to locate borrowers delinquent in the repayment of loans for which the lender has no Federal, State, or other third party guarantee. To determine the correct address of the borrower, these skip-tracing procedures should include, but need not be limited to, contacting any other individual named on the borrower's HEAL application or promissory note, using such sources as telephone directories, city directories, postmasters, drivers license records in State and local government agencies, records of members of professional associations, consumer credit reporting agencies, skip locator services, and records at any school attended by the borrower. All skip-tracing activities used must be documented. This documentation must consist of a written record of the action taken and its date and must be presented to the Secretary when requesting preclaim assistance or when filing a default claim for HEAL insurance.

(b) When a borrower is 90 days delinquent in making a payment, the lender must immediately request preclaim assistance from the Public Health Service. The Secretary does not pay a default claim if the lender fails to request preclaim assistance.

(c) Prior to the filing of a default claim, a lender must use, at a minimum, written collection practices that are at least as extensive and effective as those used by commercial lenders in the collection of other loans. These practices must include, but need not be limited to:

(1) Using collection agents, who may be internal collection agents;

(2) Instituting legal proceedings against borrowers after collection attempts have failed and before filing a default claim, provided that such litigation is appropriate; and

(3) Immediately notifying a national consumer credit reporting agency regarding accounts overdue by more than 60 days.

(d) If the Public Health Service preclaim assistance locates the borrower, the lender must implement the loan collection procedures described in this section. When the Public Health Service preclaim assistance is unable to locate the borrower, a default claim may be filed by the lender (described in § 60.40). The Secretary does not pay a

default claim if the lender has not complied with the HEAL statutes, regulations, and policies.

* * * * *

18. In § 60.37, paragraphs (a) and (b) are revised and a new paragraph (c)(4) is added to read as follows:

§ 60.37 Forbearance.

(a) "Forbearance" means an extension of time for making loan payments or the acceptance of smaller payments than were previously scheduled to prevent a borrower from defaulting on his or her payment obligations. A lender must notify each borrower of the right to request forbearance.

(1) Except as provided in paragraph (a)(2) of this section, a lender must grant forbearance whenever the borrower is temporarily unable to make scheduled payments on a HEAL loan and the borrower continues to repay the loan in an amount commensurate with his or her ability to repay the loan. Any circumstance which affects the borrower's ability to repay the loan must be fully documented.

(2) If the lender determines that the default of the borrower is inevitable and that forbearance will be ineffective in preventing default, the lender may submit a claim to the Secretary rather than grant forbearance. If the Secretary is not in agreement with the determination of the lender, the claim will be returned to the lender as disapproved and forbearance must be granted.

(b) A lender must exercise forbearance in accordance with terms that are consistent with the 25- and 33-year limitations on the length of repayment (described in § 60.11) if the lender and borrower agree in writing to the new terms. Each forbearance period may not exceed 6 months.

(c) * * *

(4) The total period of forbearance (with or without interruption) granted by the lender to any borrower must not exceed 2 years. However, when the borrower and the lender believe that there are bona fide reasons why this period should be extended, the lender may request a reasonable extension beyond the 2-year period from the Secretary. This request must document the reasons why the extension should be granted. The lender may grant the extension for the approved time period if the Secretary approves the extension request.

19. In §60.38, paragraph (a) is revised to read as follows:

§ 60.38 Assignment of a HEAL loan.

* * * * *

(a) *Procedure.* A HEAL note assigned from one lender to another must be subject to a blanket endorsement together with other HEAL notes being assigned or must individually bear effective words of assignment. Either the blanket endorsement or the HEAL note must be signed and dated by an authorized official of the seller. Within 15 days of the transaction, the buyer must notify the following parties of the assignment.

(1) The Secretary;

(2) The borrower. The notice to the borrower must contain a clear statement of all the borrower's rights and responsibilities which arise from the assignment of the loan, including a statement regarding the consequences of making payments to the seller subsequent to receipt of the notice;

(3) The borrower's school, as shown on the application form supporting the loan purchased by the buyer, if the borrower is enrolled in school; and

(4) Other schools, if known, that the borrower attended while receiving the HEAL loan(s) from the lender.

* * * * *

20. In § 60.40, paragraphs (a) and (c) are revised to read as follows:

§ 60.40 Procedures for filing claims.

(a) A lender must file an insurance claim on a form approved by the Secretary. The lender must attach to the claim all documentation necessary to litigate a default, including any documents required to be submitted by the Federal Claims Collection Standards, and which the Secretary may require. Failure to submit the required documentation and to comply with the HEAL statute, regulations, and policies will result in a claim not being honored. The Secretary may deny a claim that is not filed within the period specified in this section. The Secretary requires for all claims at least the following documentation:

(1) The original promissory note;

(2) An assignment to the United States of America of all right, title, and interest of the lender in the note;

(3) The loan application;

(4) The history of the loan activities from the date of loan disbursement through the date of claim, including any payments made; and

(5) A Borrower Status Form (HRSA-508), documenting each deferment granted under § 60.12 or a written statement from an appropriate official attesting that the borrower is engaged in an activity for which he or she is entitled to receive a deferment.

* * * * *

(c) In addition, the lender must comply with the following requirements for the filing of default, death, disability, and bankruptcy claims:

(1) *Default claims.* (i) If a lender determines that it is not appropriate to file suit against a defaulted borrower pursuant to § 60.35(c)(2), it must file a default claim with the Secretary within 10 days after a loan has been determined to be in default. "Default" means the persistent failure of the borrower to make a payment when due or to comply with other terms of the note or other written agreement evidencing a loan under circumstances where the Secretary finds it reasonable to conclude that the borrower no longer intends to honor the obligation to repay the loan. In case of a loan repayable (or on which interest is payable) in monthly installments, this failure must have persisted for 120 days. In the case of a loan repayable (or on which interest is payable) in less frequent installments, this failure must have persisted for 180 days.

(ii) In addition to the documentation required for all claims, the lender must submit with its default claim at least the following:

(A) Repayment schedule(s);

(B) A collection history, if any;

(C) A final demand letter;

(D) The original or a copy of all correspondence relevant to the HEAL loan to or from the borrower (whether received by the original lender, a subsequent holder, or an independent servicing agent); and

(E) A claims collection litigation report.

(iii) If the lender files a default claim on a loan and subsequently receives a notice of the first meeting of creditors in the borrower's bankruptcy, the lender must forward within 10 days that notice to the Secretary. If the Secretary has not paid the claim at the time the lender receives that notice, upon receipt of the notice, the lender must file with the bankruptcy court a proof of claim and an objection to the discharge or compromise of the HEAL loan. If the Secretary has paid the claim, the lender must file a statement to that effect with the court.

(2) *Death claims.* A lender must file a death claim with the Secretary within 10 days after the lender obtains documentation that a borrower is dead. In addition to the documentation required for all claims, the lender must submit with its death claim those documents which verify the death, including an official copy of the Death Certificate.

(3) *Disability claims.* A lender must file a disability claim with the Secretary within 10 days after it has been notified that the Secretary has determined a borrower to be totally and permanently disabled. In addition to the documentation required for all claims, the lender must submit with its claim evidence of the Secretary's determination that the borrower is totally and permanently disabled.

(4) *Bankruptcy claims.* A lender must file a bankruptcy claim with the Secretary within 10 days after the lender receives a notice of the first meeting of creditors in a borrower's bankruptcy proceeding. The lender must file with the bankruptcy court a proof of claim and an objection to the discharge or compromise of the HEAL loan. In addition to the documentation required for all claims, with its claim the lender must submit to the Secretary at least the following:

(i) Repayment schedule(s);

(ii) A collection history, if any;

(iii) A proof of claim;

(iv) An assignment to the United States of America of its proof of claim;

(v) All pertinent documents sent to or received from the bankruptcy court; and

(vi) A statement of any facts of which the lender is aware that may form the basis for an objection to the bankrupt's discharge or an exception to the discharge.

21. In § 60.42, paragraph (a)(1) introductory text and (a)(i)(viii) and (ix) are revised, paragraph (a)(1)(x), paragraphs (a)(4), (d) and (e) are added to read as follows:

§ 60.42 Records, reports and inspection requirements for HEAL lenders

(a) *Records.* (1) A lender must keep complete and accurate records of each HEAL loan which it holds. The records must be organized in a way that permits them to be easily retrievable and allows the ready identification of the current status of each loan. The required records include:

* * * * *

(viii) The documents required for the exercise of forbearance;

(ix) Documentation of the assignment of the loan; and

(x) Evidence of a borrower's credit worthiness, including the borrower's credit report and a copy of the student borrower's financial aid transcript(s).

* * * * *

(4) The lender must maintain accurate and complete records on each HEAL borrower and related school activities required by the HEAL program. All HEAL records shall be maintained under security and protected from fire, flood, water leakage, other environmental threats, electronic data system failures or power fluctuations, unauthorized intrusion for use, and theft.

* * * * *

(d) The lender must comply with the Department's biennial audit requirements of section 705 of the Act.

(e) Any lender who has information which indicates potential or actual commission of fraud or other offenses against the United States, involving these loan funds, must promptly provide this information to the appropriate Regional Office of Inspector General for Investigations.

22. In § 60.50, paragraph (a)(2)(ii)(F) is revised to read as follows:

§ 60.50 Which schools are eligible to be HEAL schools?

(a) * * *

(2) * * *

(ii) * * *

(F) Council on Podiatric Medical Education.

* * * * *

23. Section 60.51 is revised to read as follows:

§ 60.51 The student loan application.

Prior to certifying a student's HEAL application, the school must conduct an entrance interview which provides the student information about the HEAL loan, including an explanation about the borrower's rights and responsibilities. When the student completes his or her portion of the student loan application and submits it to the school, the school must do the following:

(a) Accurately and completely fill out its portion of the HEAL application;

(b) Verify, to the best of its ability, the information provided by the student on the HEAL application, including, but not limited to, citizenship status by using a notarized copy of the applicant's birth certificate or the applicant's I-151 or I-551, if the applicant is required to possess such identification by the United States, and social security number by using the applicant's original Social Security card or copy issued by the Federal Government;

(c) Certify that the student is eligible to receive a HEAL loan, according to the requirements of § 60.5;

(d) Obtain from the student and forward to the lender a copy of the financial aid transcript(s) which include(s) at least the following data:

(1) Student's name:

(2) Amounts and sources of all educational loans and grants, including Federal and non-Federal, previously received by the student for study at an institution of higher education;

(3) Whether the student is in default on any of these loans, or owes a refund on any grants;

(4) The outstanding principal of these loans;

(5) Certification from each institution attended by the student that the student has received no financial aid, if applicable; and

(6) From each institution attended, the signature of an official authorized by the institution to sign such transcripts on behalf of the institution.

(e) Attest that it has no reason to believe that the borrower will not, or may not be able to, comply with any requirements, including the repayment requirements, of the Heal loan;

(f) Make reasonable determinations of the maximum loan amount approvable, based on the student's circumstances. The student applicant determines the amount he or she wishes to borrow, up to this maximum amount. Only then may the school certify an eligible application. In determining the maximum loan amount approvable, the school will calculate the difference between:

(1) All financial assets of the applicant, including any student aid, familial, spousal, or personal income or financial assistance of which the school or the applicant is aware that is legally or contractually available to the applicant or that the applicant has received or will receive for the period covered by the proposed HEAL loan, in addition to other information which the school has obtained regarding the student's financial status by using one of the national need analysis systems or any other procedure approved by the Secretary of Education and published under 34 CFR 674.13; and

(2) The costs reasonably necessary for each student to pursue the same or similar curriculum or program within the same class year at the school by using a standard student budget system. Educational expenses or other costs which could legally be paid by money obtained through a HEAL loan, but which have already been paid must not be used in the calculation. The school must maintain in the student's record the criteria used for determining the reasonable costs.

(g) Comply with the requirements of § 60.61.

24. In § 60.52, paragraph (a) is removed paragraphs (b) and (c) are redesignated as (a) and (b), respectively, and newly designated paragraph (a)(1) is revised to read as follows:

§ 60.52 The student's loan check.

(a) * * *

(1) If the school receives the instrument after the student is enrolled, obtain the student's endorsement, retain that portion of funds due the school, and

disburse the remaining funds to the student.

* * * * *

25. Section 60.53 is revised to read as follows:

§ 60.53 Notification to lender of change in enrollment status.

Each school must notify the holder of a HEAL loan of any change in the student's enrollment status within 15 days following the change in status. Each notice must contain the student's full name under which the loan was received, the student's current name (if different), the date of the student's graduation, formal withdrawal, or failure to enroll as scheduled for any academic period as a full-time student, the student's latest known permanent and temporary addresses, and other information which the school decides is necessary to identify or locate the student. If the school does not know the identity of the current holder of the HEAL loan, it must notify the HEAL Program Office of a change in the student's enrollment status.

26. Section 60.56 is amended by revising paragraphs (a) introductory text and (a)(4), by redesignating paragraphs (a)(9) and (a)(10) as (a)(17) and (a)(18), respectively, and adding new paragraphs (a)(9) through (a)(16) and (c) and by revising newly designated (a)(18) to read as follows:

§ 60.56 Records.

(a) In addition to complying with the requirements of section 739(b) of the Act, each school must maintain an accurate, complete, and easily retrievable record with respect to each student who has a HEAL loan. The record must contain all of the following information:

* * * * *

(4) Amount and source of other financial assistance received by the student during the period for which the HEAL loan was made:

* * * * *

(9) Written procedures followed by the school for the receipt, verification of amount, and disbursement of HEAL checks or drafts;

(10) List(s) of all items discussed during each entrance interview, the date(s) of the entrance interview(s), the signature of the borrower indicating that the entrance interview(s) was (were) conducted;

(11) List(s) of all items discussed during the exist interview, the date of the exit interview, the signature of the borrower indicating that the exit interview was conducted;

(12) Notarized copy of the borrower's birth certificate or a photocopy made by the school of the borrower's I-151 or I-551, if the borrower is required to possess such identification by the United States, and a photocopy made by the school of the borrower's original Social Security card or copy issued by the Federal Government;

(13) Documentation of the calculations made which compare the financial resources of the applicant with the cost of his or her education at the school;

(14) Copy(s) of the financial aid transcript(s) which was (were) sent to the lender(s);

(15) Documentation of the criteria used to prepare the cost of attendance which reflect costs reasonably necessary for the student to pursue his or her education at the school (see § 60.51);

(16) Copies of all correspondence between the school and the borrower or between the school and the lender or its assignee regarding the loan;

* * * * *

(18) Postgraduate destination of borrower.

* * * * *

(c) The school must comply with the Department's biennial audit requirements of section 705 of the Act.

27. In § 60.60, paragraph (c) is revised to read as follows:

§ 60.60 Limitation, suspension, or termination of the eligibility of a HEAL school.

* * * * *

(c) This section does not apply to administrative action by the Department of Health and Human Services based on any alleged violation of The Family Educational Rights and Privacy Act of 1974 (section 438 of the General Education Provisions Act, as amended), as governed by 34 CFR Part 99.

28. A new § 60.61 is added to read as follows:

§ 60.61 Responsibilities of a HEAL School.

(a) A HEAL school is required to carry out the following activities for each HEAL applicant or borrower:

(1) Conduct an entrance interview with each student applying for a HEAL loan, regardless of whether the student has had a previous HEAL loan, and maintain a list of all items discussed during each entrance interview, the date of each entrance interview, and the signature of the borrower for each entrace interview indicating that each entrance interview was conducted. The school must inform the student during the entrance interview of his or her rights and responsibilities under a HEAL loan, including the consequences for noncompliance with those responsibilities.

(2) Conduct an exit interview with each HEAL loan recipient within 60 days before the student's anticipated graduation date or other date for the student's departure from the school and maintain a list of all items discussed during the exit interview, the date of the exit interview, and the signature of the borrower indicating that the exit interview was conducted. The school must inform the borrower in the exit interview of his or her rights and responsibilities under each HEAL loan, including the consequences for noncompliance with those responsibilities. A copy of the documentation of the exit interview and any other information required by the Secretary regarding the exit interview must be sent to the lender of each HEAL loan within 15 days of the exit interview. If the borrower departs from the school prior to the anticipated date and does not receive an exit interview, the exit interview information must be mailed to the borrower by the school. In this event, the lender(s) must be so notified within 15 days of the school's knowledge of the departure.

(3) Verify the accuracy and completeness of information provided by each student on the HEAL loan application, particularly in regard to the HEAL eligibility requirements, by comparing the information with previous loan applications or other records or information provided by the student to the school. Notify the potential lender of any discrepancies which were not resolved between the school and the student.

(4) Develop and implement procedures relating to check receipt and release which keep these functions separate from the application preparation and approval process and assure that the amount of the HEAL loan check(s) does(do) not exceed the approved total amount of the loan and the statutory maximums. Checks must not be cashed without the borrower's personal endorsement. Documentation of these procedures and their usage shall be maintained by the school.

(5) Maintain accurate and complete records on each HEAL borrower and related school activities required by the HEAL program. All HEAL records shall be maintained under security and protected from fire, flood, water leakage, other environmental threats, electronic data system failures or power fluctuations, unauthorized intrusion for use, and theft.

(6) Maintain a standard student budget system and maintain in each HEAL borrower's record a copy of the budgetary calculations which were actually used in the determination of the maximum loan amount approvable for the student, as described in § 60.51.

(7) Notify the lender or its assignee of any changes in the student's name, address, status, or other information pertinent to the HEAL loan not more than 15 days after receiving information indicating such a change.

(b) Any school which has information which indicates potential or actual commission of fraud or other offenses against the United States involving these loan funds must promptly provide this information to the appropriate Regional Office of Inspector General for Investigations.

(c) The school will be considered responsible and the Secretary may seek reimbursement from any school for the amount of a loan in default on which the Secretary has paid an insurance claim, if the Secretary finds that the school did not comply with the applicable HEAL statute, regulations and policies.

[FR Doc. 86-11277 Filed 5-20-86; 8:45 am]

BILLING CODE 4160-16-M

federal register

Wednesday
May 21, 1986

Part III

Department of Agriculture

Food and Nutrition Service

7 CFR Parts 271, 272, 273, 274, 276, 279, and 286

Food Stamp Program; the Food Security Act of 1985; Nondiscretionary Provisions; Final Rule and Correction

DEPARTMENT OF AGRICULTURE

Food and Nutrition Service

7 CFR Parts 271, 272, 273, 274, 276, 279 and 285

[Amdt. No. 274]

Food Stamp Program; The Food Security Act of 1985—Nondiscretionary Provisions

AGENCY: Food and Nutrition Service, USDA.

ACTION: Final rule and correction.

SUMMARY: The Food Security Act of 1985 includes numerous provisions which amend the Food Stamp Program. This final rule implements those nondiscretionary provisions pertaining to: (1) Mandatory monthly reporting/retrospective budgeting (MRRB); (2) standard utility allowances and the treatment of indirect energy assistance payments; (3) eligibility for the homeless; (4) annualizing self-employment income; (5) eligibility of participants in the Job Training Partnership Act; (6) the definition of the disabled; (7) certification of information (perjury statement); (8) the Puerto Rico block grant; (9) overissuance liability of all household members; and (10) the administrative and judicial reviews for State agencies and retailer/wholesalers.

This rule also includes statutory waiver provisions pertaining to the MRRB rules which resulted from the Omnibus Budget Reconciliation Act of 1981, the Omnibus Budget Reconciliation Act of 1982 and the Food Stamp Amendments of 1983.

In addition, this rule contains a technical amendment to correct errors which appeared in a final rule published on March 28, 1986, entitled *Food Stamp Program: Eligibility, Certification and Notice Provisions and Technical Amendments of 1985.* This rule also corrects a final rule published on April 1, 1986 entitled *Food Stamp Program: Provisions on Earned Income, Shelter and Dependent Care Deductions, Resource Limits and Sales Tax on Food Stamp Purchases.* This correction is being made to include a conforming amendment to the resource provisions of that rule which was inadvertently overlooked.

DATES: The provisions at § 276.7(j) and § 279.10(d) from the Food Security Act of 1985 are retroactive to December 23, 1985. The provisions from the Food Security Act of 1985 at § 273.18, § 285.2 and § 285.3 are effective June 20, 1986. The provisions from the Food Security Act of 1985 which reflect current policy at § 273.2(f)(1)vi), § 273.2(i)(4)(i), 272.3, § 273.11(a)(1)(i) and § 274.1(a) are effective May 21, 1986. All other provisions from the Food Security Act of 1985 reflected in this rulemaking are effective June 20, 1986 to be implemented no earlier than the effective date and no later than August 1, 1986. The remaining provisions in this rulemaking pertain to statutory waiver authority and have been in effect since the enactment of the applicable law. Therefore, the provisions at § 273.21(a)(4)(i)(A) and the second sentence at § 273.10(f)(7) are effective retroactive to August 31, 1981. Section 273.21(a)(4)(ii)(A) and the first two sentences of § 273.21(a)(4)(ii)(B) are retroactive to September 8, 1982. The provisions at § 272.3, § 273.21(a)(4)(i)(B), § 273.21(a), § 273.21(a)(3), the third sentence at § 273.10(f)(7) and the last two sentences of § 273.21(a)(4)(ii)(B) are effective retroactive to December 2, 1983.

FOR FURTHER INFORMATION CONTACT: Judith M. Seymour, Supervisor, Certification Rulemaking Section, Eligibility and Monitoring Branch, Program Development Division, Food and Nutrition Service, USDA, Alexandria Virginia, 22302, (703) 756-3429.

SUPPLEMENTARY INFORMATION:

Executive Order 12291

The Department has reviewed this final rule under Executive Order 12291 and Secretary's Memorandum No. 1512-1. The rule will affect the economy by less than $100 million a year. The rule will not significantly raise costs or prices for consumers, industries, government agencies or geographic regions. There will not be a significant adverse effect on competition, employment, investment, productivity, innovation or on the ability of United States-based enterprises to compete with foreign-based enterprise in domestic or export markets. Therefore, the Department has classified the rule as "not major."

Executive Order 12372

The Food Stamp Program is listed in the Catalog of Federal Domestic Assistance under No. *10.551.* For the reasons set forth in the Final rule related Notice to 7 CFR 3015, Subpart V (48 FR 29115), this program is excluded from the scope of Executive Order 12372 which requires intergovernmental consultation with State and local officials.

Regulatory Flexibility Act

This proposed rule has been reviewed with regard to the requirements of the Regulatory Flexibility Act of 1980 (Pub. L. 96-354, 94 Stat. 1164, September 19, 1980). Robert E. Leard, Administrator of the Food and Nutrition Service, has certified that some small entities will be affected by the provision concerning stays of administrative action by FNS against retailers and wholesalers. While the economic impact on some of these small stores could be significant, there will not be a substantial economic impact on a large number of small entities. All other provisions in the rulemaking will not have a significant economic impact on a substantial number of small entities. The changes will affect food stamp recipients and the State and local agencies which administer the Program.

Paperwork Reduction Act

This final rulemaking does not contain reporting or recordkeeping requirements subject to approval by the Office of Management and Budget (OMB) under the Paperwork Reduction Act of 1980 (44 U.S.C. 3507).

Public Participation and Effective Date Justification

This rule implements provisions of Pub. L. 99-198, 97-35, 97-253 and 98-204, which are nondiscretionary. That is to say that the provisions of this rulemaking are specifically prescribed by law and cannot be affected by public comment. For these reasons, the Department has determined, in accordance with 5 U.S.C. 553(b), that notice of proposed rulemaking and public comment are unnecessary and contrary to public interest. Further, since this rulemaking merely implements the cited statutory provisions it constitutes an interpretative rule for which notice and public comment are not required under 5 U.S.C. 553.

This final rulemaking includes several amendments reflecting self-implementing provisions of law which were effective upon the enactment of the statute as specified in the section of this preamble titled "Implementation." The Department is issuing regulations pertaining to these sections in order to provide an overall view of program policy. Therefore, the Department has determined, in accordance with 5 U.S.C. 553(d), that an implementation period for these provisions is unnecessary. All other provisions of this rulemaking are effective no less than 30 days after publication.

Background

The Food Security Act of 1985 (Pub. L. 99-198) was enacted on December 23, 1985. Pub. L. 99-198 made a number of

nondiscretionary changes to the Food Stamp Act of 1977, as amended. This final rulemaking contains these nondiscretionary changes and these are discussed below.

State agencies have been able to exercise the statutory waiver provisions authorized through the Omnibus Budget Reconciliation Act of 1981 (Pub. L. 97-35), the Omnibus Budget Reconciliation Act of 1982 (Pub. L. 97-253) and the Food Stamp Amendments of 1983 (Pub. L. 98-204) since the enactment of the statutes. As will be discussed, this final rulemaking includes language pertaining to the statutory waiver authority.

Definition of Disabled—§ 271.2

Under current regulations, persons defined as disabled receive special treatment in their eligibility and coupon allotment determinations. The special treatment includes: (1) The right to claim allowable medical expenses as a deduction from income; (2) the ability to claim excess shelter costs as a deduction from income without regard to the dollar limit imposed on other households; and (3) an exemption from the food stamp gross income eligibility test.

The current definition of disabled persons contained in section 3(r) of the Food Stamp Act (7 U.S.C. 2012(r)), and reflected in § 271.2 of the food stamp regulations, is limited to those persons who are permanently or totally disabled. Section 1504 of Pub. L. 99-198 adds four additional categories to the definition of disabled persons. These categories are: (1) Recipients of State or federally administered Supplemental Security Income (SSI) payments under section 1616(a) of the Social Security Act (optional State supplementation) provided that eligibility to receive the benefits is based upon the disability or blindness criteria used under title 16 of the Social Security Act or payments under section 212(a) of Pub. L. 93-66 (mandatory minimum State supplementation of SSI benefits); (2) veterans receiving pensions for non-service connected disability; (3) recipients of Federal, State or local public disability retirement pensions who have a disability considered permanent under section 221(i) of the Social Security Act; and (4) Railroad Retirement disability annuitants who either meet the social security disability criteria in order to receive their annuity or who are determined to quality for Medicare by the Railroad Retirement Board.

Accordingly, this rulemaking amends 7 CFR 271.2 to include the four additional categories of disabled persons specified in Section 1504 of Pub. L. 99-198. Section 273.2(f)(1)(viii)(A) of 7 CFR is revised to clarify the mandatory verification requirements the household must complete in the application process. Finally, this rulemaking amends the current definition of "Supplemental Security Income (SSI)" at 7 CFR 271.2 to bring the definition into conformance with the SSI recipients specified above.

Certification of Information—Perjury Statement—§ 273.2

Under current regulations at 7 CFR 273.2(b), the food stamp application form must contain a statement that the information provided by the applicant is subject to verification by Federal, State, and local officials. The form must also state that if any such information is incorrect, food stamps may be denied and the applicant may be subject to criminal prosecution if he or she knowingly provided incorrect information. Finally, the application must include a description of the civil and criminal provisions and penalties for violation of the Food Stamp Act.

This rule implements a provision enacted by Pub. L. 99-198 (section 1525) concerning applicant perjury. This provision requires one adult member in all applicant households to certify in writing, under penalty of perjury, the truth of the information contained in the application for the household's coupon allotment. This perjury statement does not alter any of the required statements which currently appear on the application. The legislative history (Senate Rept. No. 99-145, pg. 256) indicates that the perjury statement is intended to improve program administration and aid in the prosecution of fraudulent participation.

Accordingly, this rulemaking amends 7 CFR 273.2 to require that food stamp applications contain a perjury statement which must be signed by one adult member of the household.

Eligibility of the Homeless—Residency Requirement—§§ 273.2, 273.3, and 274.1

The regulations currently governing food stamp eligibility at 7 CFR 273.3 require that households reside in a project area where an application is submitted unless the State agency makes other arrangements. However, current regulations prohibit the State agencies from imposing a durational, fixed, or permanent residency requirement. Therefore, a household cannot be denied participation in the Food Stamp Program because it lacks a fixed address.

In order to further ensure that food stamp benefits are made available to eligible homeless households, section 1529 of the Food Security Act requires that State agencies provide a method to certify and issue coupons to eligible households that do not reside in a permanent dwelling or have a fixed mailing address. In addition, the legislative history (H. Rept. 99-271, pg. 134) emphasizes that the prohibition against a fixed residency requirement does not relieve the States of their responsibility to protect against program abuse, including multiple participation. Therefore, if applicant households are homeless, State agencies will not be able to monitor duplicate participation through an address as currently permitted by 7 CFR 274.1(d)(1). However, the State agency must continue to ensure that no individual participates in the program more than once a month. The legislation (section 1529) also specifies that the State agency should ensure that participation is limited to eligible households.

Accordingly, this rulemaking amends 7 CFR 273.3 to clarify that States may not require an applicant household to have a fixed mailing address as a condition of eligibility. Section 274.1(a) of 7 CFR is revised to require that a State agency's issuance system provides benefits to individuals who do not reside at a fixed mailing address. Finally, 7 CFR 273.2(f)(1)(vi) and 273.2(i)(4)(i) are amended to clarify that a State agency may not deny an applicant homeless household participation in the program when residency cannot be verified.

Student Eligibility—Job Training Partnership Act Participation—§ 273.5

The current regulations at 7 CFR 273.5(a) define a student as anyone who is: (1) Between the ages of 18 and 60; (2) physically and mentally fit; and (3) enrolled at least half-time in an institution of higher education. In order to be eligible to participate in the Food Stamp Program, a student must meet at least one of the criteria prescribed at 7 CFR 273.5(b)(1). These criteria are: (1) Employment for a minimum of 20 hours per week; (2) participation in a federally financed work study program (e.g., Title IV-C of the Higher Education Act of 1965) during the regular school year; (3) responsibility for the care of a dependent household member under the age of six; (4) responsibility for the care of a dependent household member between the ages of six and eleven for whom the State agency has determined that adequate child care is not available; or (5) receipt of benefits under the Aid to Families with Dependent Children Program.

The Food Security Act of 1985 (section 1516(4)) adds one category of eligibility

to § 273.5(b)(1). Under this provision, students who are assigned to or placed in an institution of higher learning through a program under the Job Training Partnership Act may be eligible to participate in the Food Stamp Program.

Therefore, this rulemaking amends 7 CFR 273.5(b)(1) of the regulations to include this category of eligible students as specified in section 1516(4) of Pub. L. 99-198.

Standard Utility Allowance (SUA) Energy Assistance Payments—§ 273.9

The Food Security Act of 1985 in section 1511 contains several provisions which affect the treatment of Low Income Home Energy Assistance Act (LIHEAA) or similar energy assistance payments when computing the shelter cost deduction in the food stamp coupon allotment and eligibility determinations. The provisions simplify program administration and ensure that the option to claim a SUA is provided to all households who are eligible to receive the SUA. These provisions are described below.

1. Allowable Expenses.

The Low Income Home Energy Assistance Act of 1981 specifically requires that payments received under the Act cannot be counted as income or resources under any Federal or State law relating to taxation, food stamps, public assistance or welfare programs. Depending on the State's management of LIHEAA payments, a food stamp household may either receive LIHEAA payments directly or have its payments transferred to the energy assistance provider. The latter method is often referred to as an "indirect" or "vendor" payment. Indirect payments are currently excluded as an allowable deduction under regulations at 7 CFR 273.10(d)(1) which prohibit indirect payments as a deductible expense. Therefore, households that receive their LIHEAA or similar energy assistance payments "indirectly" are currently unable to claim any portion of the expenses covered by the LIHEAA payments toward a SUA which includes a heating and/or cooling component.

Section 1511 of Pub. L. 99-198 provides that households which incur out-of-pocket heating or cooling expenses over and above their indirect LIHEAA or similar energy assistance payments in any month are entitled to receive the SUA which includes a heating or cooling cost as prescribed at 7 CFR 273.9(d)(6). Accordingly, this rulemaking revises 7 CFR 273.9(d)(6) to clarify how indirect energy assistance payments pertain to the shelter cost deduction.

2. Proration.

Section 1511 of Pub. L. 99-198 specifies that LIHEAA payments must be prorated on a monthly basis over the entire heating or cooling season for which it was provided. The legislative history (H. Conf. Rept. No. 99-447, 99th Cong., 1st Sess., 562 (1985)) indicates that the intent of this proration is to ensure that the SUA or actual utility costs are handled equitably despite State variations in the distribution of LIHEAA or similar energy assistance payments.

Accordingly, this final rulemaking amend 7 CFR 273.10(d) of the regulations to specify that LIHEAA and other energy assistance payments must be prorated.

3. Developing Standard Utility Allowances.

As previously noted, an SUA must be made available to those households which continue to incur out-of-pocket heating or cooling expenses after their LIHEAA or similar energy assistance payments have been prorated over the entire heating or cooling season. Under current rules relating to the SUA, the State agency may either develop a single SUA which includes the heating and/or cooling component or develop standards for each allowable expense.

Section 1511 of Pub. L. 99-198 provides that State agencies may use a single SUA with an additional option. In order to provide equitable treatment for participating households, State agencies may now elect to develop two SUAs for households incurring heating or cooling expenses—one for households not receiving indirect energy assistance payments and a second which would apply to households receiving indirect energy assistance payments and incurring any out-of-pocket heating or cooling expenses. If the State agency chooses to develop two SUAs for households incurring heating or cooling expenses, the SUA reflecting indirect energy assistance payments must be based on an average of the out-of-pocket heating or cooling expenses incurred by these households. If the State agency does not elect to develop two single SUAs, but continues to use a single SUA, the full amount of the single SUA must be made available to those households which receive indirect LIHEAA or similar energy assistance payments and incur any out-of-pocket heating or cooling expenses.

Accordingly, this final rulemaking amends 7 CFR 273.9(d)(6) to reflect this option.

4. Switching.

Under current regulations prescribed at 7 CFR 273.9(d)(6), the State agency must allow the household to switch between the use of the SUA and actual costs at the time of recertification except in States which use an annualized standard. If the State agency uses the annualized SUA, the household is not allowed to switch between the SUA and actual costs except at twelve-month intervals after the initial certification action.

The Food Security Act of 1985 alters this requirement. Under section 1511 of Pub. L. 99-198, the State agency is required to allow the household to switch between the SUA and actual utility costs at each recertification action and one additional time during each twelve-month period following the initial certification action.

Accordingly, the final rulemaking revises 7 CFR 273.9(d)(6) of the current regulations to clarify when the household may switch between actual costs and the SUA.

Self-employment Income—§ 373.11

The Food Security Act of 1985 in section 1512 includes a provision which mandates that self-employment income be treated in the manner prescribed at 7 CFR 273.11(a)(1)(i) of the current regulations.

Section 273.11(a)(1)(i) of 7 CFR requires that self-employment income be annualized over a 12-month period even if the income is received within a short period of time during the 12 months. In order to arrive at an average monthly income which will be available to a household during the period of its food stamp eligibility, the regulations require that the monthly average be calculated on the basis of either current data or anticipated circumstances. For example, if the household expects to earn approximately the same income in the current year as it earned in the previous year it would be appropriate to use the household's current income (i.e., current data) to determine average monthly income and eligibility. However, if the household has experienced a recent increase or decrease in business, or anticipates such an increase or decrease in income, then the annualized and average monthly income figures must reflect anticipated earnings as opposed to current earnings. The State agency should not base food stamp calculations solely on past income tax returns when the household has experienced a recent substantial change in self-employment earnings. (See Senate Rept. 99-145, pg. 240).

This rulemaking amends 7 CFR 273.11(a)(1)(i) to further clarify the proper treatment of annualized self-employment income.

Liability for Overissuance of Coupons—§ 273.18

State agencies are currently required to initiate collection action for claims for overissued coupons against the household containing the majority of individuals who were members of the original household. If the majority of the original household cannot be located, collection action is initiated against the household currently containing the individual who was head of the household at the time of the overissuance. In the case of overisssuances resulting from intentional program violations, State agencies have the option of initiating collection action against the household containing the disqualified person rather than against the household containing the majority of the original household members. If State agencies do not exercise this option and cannot locate the household with the majority, collection action is initiated against the household currently containing the individual who was head of the household at the time of the overissuance.

This rule implements section 1533 of the Food Security Act of 1985 which makes all adult household members jointly and severally liable for the value of any overissuance of benefits to the household. This is true, regardless of whether the overissuance resulted from an inadvertent error, an administrative error or an intentional program violation. The provision clarifies that any adult member of a household is liable for the overissuance to the entire household. Thus, collection could be pursued from the income or resources of any or all of the adult household members. For example, if a five-person household containing three adult members has a claim against it in the amount of $1,000, the State agency could initiate collection action against any or all three of the adults based on the income and resources of each individual. However, in no event could a State agency collect an amount above the amount of the claim. The provision also permits State agencies to simultaneously pursue claims against several different households which contain adult members of a household which originally obtained an overpayment of benefits, to the extent permitted by the Act. This means that the State agency could recoup payment for a claim for the allotments of several different households at the same time. This rulemaking does not affect any other terms of existing regulations that relate to claims against households. (See 7 CFR 273.18 (a) and (f).)

Legislative History of MRRB Waiver Authority

The Food Stamp Act of 1977, as amended, contains several provisions under which MRRB requirements may be waived. Under the provisions of sections 5(f) and 6(c)(5), waivers may be approved for the purpose of achieving consistency between the retrospective budgeting and monthly reporting requirements in the Food Stamp and AFDC Programs. The authority for budgeting waivers was contained in the Omnibus Budget Reconciliation Act of 1981 (Pub. L. 97-35). The authority for monthly reporting waivers was provided by the Omnibus Budget Reconciliation Act of 1982 (Pub. L. 97-253). The waiver authorities are currently specified in regulation § 272.3(c). This final rulemaking included language in § 273.21(a)(4) of the regulations which further clarifies the statutory waiver authority.

Pub. L. 97-253 also expanded MRRB waiver authority by amending section 6(c)(1) of the Food Stamp Act to allow State agencies, with prior approval of the Secretary, to select categories of households which may report at less frequent than monthly intervals if monthly reporting would result in unwarranted expenditures. Pub. L. 98-204, enacted on December 2, 1983, further expanded State agency options with respect to households reporting at less frequent than monthly intervals. Under Pub. L. 98-204, the Secretary may permit State agencies to accept as satisfying the requirement that households report at less frequent intervals: recertifications; interviews conducted during the certification period; written reports filed by the household; or other documentation which the Secretary may prescribe. The Secretary may also permit State agencies to waive retrospective budgeting for households who have been waived from the monthly reporting requirement. This waiver authority is currently specified in the regulations at § 272.2(c). Further clarifying language has been added to § 273.21(a)(4) in this final rulemaking.

As will be discussed later in this preamble, the Food Security Act of 1985 retains the statutory waiver authority provided for in Pub. L. 97-253 and 98-204 to exempt categories of households subject to MRRB. The legislative history (Conf. Rept. No. 99-447, pg. 527) indicates that Congress intended that *all* or a part of certain household categories subject to MRRB may be waived if cost-effectiveness is proven.

Pub. L. 98-204 further amended section 6(c)(3) of the Food Stamp Act to require that the monthly report is the sole reporting requirement for information that is required to be reported monthly. As a result, State agencies were given the opportunity to narrow the focus of information required to be reported monthly and to concentrate on those circumstances that may fluctuate. Waivers to exclude required information from the monthly report were authorized under § 272.3(c) of the current regulations.

This final rule further includes language at 7 CFR 273.21 to ensure that State agencies do not subject households to dual reporting requirements as prohibited by section 6(c)(3) of the Food Stamp Act. In other words, a household may report a change on the monthly report as prescribed at 7 CFR 273.21, or through a change report as prescribed at 7 CFR 273.12. However, the State agency may not require the household to report the same change through both reporting methods. As a result of this provision, households that report information monthly may not be required to report any changes prior to the submission of their next monthly report.

This final rulemaking also contains a conforming requirement at 7 CFR 273.21(c) which requires the State agency to explain to the household at the time of certification what information is required to be reported on the monthly report. This should further clarify the household's reporting requirements.

Finally, section 3(c) of the Food Stamp Act was amended by Pub. L. 97-35 to allow waivers of the 12-month certification limit. Section 3(c) of the Food Stamp Act was further amended by Pub. L. 98-204 to allow waivers of the six-month minimum certification period for households subject to monthly reporting. Language to reflect the waiver authority relative to section 3(c) of the Act has been added to 7 CFR 272.3(c), 273.10(f) and 273.21(a)(3) in this final rulemaking.

Monthly Reporting/Retrospective Budgeting (MRRB)—§ 273.21

Under current procedures, all households except migrant farmworker households and households in which all adult members are elderly or disabled and have no earned income are required to submit a monthly report unless a waiver is sought by the State agency and approved. The State agency must also budget the household's monthly allotment retrospectively (i.e., must base the household's allotment on its income and circumstances in a previous month) if the household is subject to monthly

reporting. Households in which all adult members are elderly or disabled and have no earned income are subject to retrospective budgeting, even though they are not subject to monthly reporting. Migrant farmworker households, on the other hand, must have their allotments budgeted prospectively (i.e., on anticipated earnings and circumstances in the coming months).

Section 1513 of the Food Security Act of 1985 contains several provisions which modify the MRRB requirements. The first provision limits mandatory MRRB to those households with earnings and a recent work history. These households tend to have the greatest fluctuations in earnings and circumstances. As noted in the legislative history, this provision is intended to increase the effectiveness of existing statutory waiver provisions. Although the statutory waiver system is intended to enhance program integrity and efficiency, experience has shown that many States must spend a great deal of time justifying waivers for households whose income and circumstances do not fluctuate significantly from month to month. Therefore, by limiting mandatory MRRB to those households with the greatest fluctuation in circumstances, the provision effectively targets MRRB and reduces the need for State agencies to submit waiver requests. As previously discussed, the Food Security Act of 1985 retains the statutory waiver authority to exclude categories of households otherwise subject to MRRB.

Limiting mandatory MRRB also increases consistency with the Aid to Families with Dependent Children (AFDC) Program because the AFDC Program limits mandatory MRRB to households with earnings or a recent work history. In order to further enhance consistency between the two programs, this rulemaking establishes that the State agency must adopt the recent work history definition that is used in its AFDC Program for public and non-public assistance households. This requirement reflects Congressional intent to conform the programs and increase State agency flexibility. Accordingly, this rulemaking amends 7 CFR 273.21(b)(1) to incorporate the mandatory MRRB and recent work history requirements.

A second provision of the Food Security Act of 1985 which modifies the MRRB system requires households in which all adult members are elderly or disabled and have no earned income to have their allotment computations budgeted on a prospective basis. This provision clarifies that those households which are excluded by law from monthly reporting are also prohibited from having their allotment computations budgeted retrospectively. This final rulemaking revises the current regulations at 7 CFR 273.21(b)(2) to include this provision.

The last provision of the Food Security Act of 1985 pertaining to MRRB permits State agencies to expand retrospective budgeting, monthly reporting, or both, to all other households which are not statutorily exempt from MRRB. Therefore, certain household categories may, at the discretion of the State agency, be required to report monthly and have their allotments budgeted retrospectively. Furthermore, the State agency may require that the household report changes as prescribed at 7 CFR 273.12 (i.e., within 10 days of becoming aware of the change) but budget the allotment retrospectively. However, the Food Security Act does not change the existing statutory requirement that households required to report monthly must have their allotments budgeted retrospectively.

Judicial Reviews—§ 276.7(j) and § 279.10(d)

This rule also codifies a change in the Food Stamp Act relating to the administrative and judicial review of negative actions taken by FNS against a retail or wholesale firm or a claim levied by FNS against a State agency. Section 14 of the Food Stamp Act, and current regulations, require that retail and wholesale firms whose applications for authorization are denied or withdrawn, who are disqualified or who have civil money penalties levied against them be allowed an administrative review of their case prior to the penalty being put into effect. State agencies that have claims levied aganist them also have the same opportunity for review given to them. Section 14 also provides that any entity aggrieved by the determination of the review may obtain a judicial review of the determination. Should a judicial review be sought, the negative action is to remain in force unless a stay of the action is granted. The amendment to section 14, contained in section 1536 of Pub. L. 99-198, pertains to the granting of such stays.

Prior to the enactment of Pub. L. 99-198, a stay could be granted upon a showing that the determination would result in irreparable injury. The amendment to Section 14 requires that stays be granted only upon a showing that the applicant is likely to prevail on the merits and of irreparable injury.

Puerto Rico Block Grant—§ 285.2 and § 285.3

This rule implements provisions of the Food Security Act of 1985 which amend section 19 of the Food Stamp Act of 1977 to provide increases in block grant funding levels for the Commonwealth of Puerto Rico through Fiscal Year 1990, and permit the Commonwealth to designate more than one agency to administer, or supervise the administration of, the food assistance program in Puerto Rico.

Due to concerns regarding the dislocating effect the massive flow of food coupons may have had on the Puerto Rican economy prior to the block grant program, Congress indicated in legislative history, accompanying the Omnibus Budget Reconciliation Act of 1981, that a portion of the grant could be used for the purpose of agricultural development in Puerto Rico. A small portion of the grant has been used for this purpose and is managed by a different government agency in Puerto Rico from the agency that handles the bulk of the nutrition assistance program. This split responsibility necessitated the modification to the Act with regard to the single agency requirement for supervision of the grant program in Puerto Rico. This rule implements the requirements of the Food Security Act of 1985 using language which permits the Commonwealth to designate more than one govenment agency to supervise programs funded under the nutrition assistance grant. The law mandates that a single plan of operation be submitted by the Commonwealth encompassing all programs funded under the nutrition assistance grant. Final approval authority for this plan of operation rests with the Department's Food and Nutrition Service. Consequently, while the Department acknowledges the Commonwealth's prerogative to designate which agency(ies) of its government should administer the different programs specified in its plan of operation, the Department can foresee situations in which these designations may not always prove to be compatible with Departmental administration and supervision of the nutrition assistance grant. These rules, therefore, permit Puerto Rico to designate the agency(ies) which it feels should administer the various programs funded by the grant while concurrently allowing the Department the prerogative of making the final determination, under its plan of operation approval authority, as to which Commonwealth agency(ies) should administer the various programs and with which agency(ies) of the

Department they are to cooperate in fulfilling the various requirements under the grant.

In an effort to curtail rising program costs in Puerto Rico, Congress instituted a nutrition assistance grant program for the Commonwealth to be funded at a specified capped annual rate. Previous regulations specifically delineated the actual annual dollar amounts of this funding. However, in order to eliminate the necessity of amending the specific dollar amounts contained in the regulations each time Congress amends these amounts through legislation, the Department is amending 7 CFR 285.2 to state that the amount of grant funds provided to Puerto Rico shall not exceed amounts appropriated for this purpose.

The Food Security Act of 1985 also permitted the Commonwealth of Puerto Rico to continue operation of a cash benefit system in providing food assistance under its nutrition assistance grant program. Current regulations in Part 285 do not mandate the type of benefit delivery system which the Commonwealth must employ. There is, therefore, no need to amend the current rules as written.

Implementation

The provisions of this action relating to: (1) The definition of disabled; (2) eligibility for Job Training Partnership Act participants; (3) the treatment of indirect energy assistance payments; and (4) prospective budgeting for households in which all adult members are elderly or disabled and have no earned income shall be implemented no earlier than the effective date of this rule and no later than August 1, 1986 for the current caseload and all new applicants. If, for any reason, a State agency fails to implement these provisions on this date, households shall be provided the lost benefits which they would have received if the State agency had implemented these provisions as required.

The provisions of this action relating to: (1) Mandatory MRRB for households with earnings and a recent work history; (2) optional MRRB for households which are not statutorily exempt from MRRB; (3) the perjury statement included on the application; and (4) the household's option to switch between actual utility costs and the SUA shall also be implemented no earlier than the effective date and no later than August 1, 1986. These provisions do not require an active case file review. However, a case shall be reviewed upon the request of a recipient household to switch between actual utility costs and the SUA.

The provisions of this action pertaining to eligibility and issuance for the homeless at §§ 273.3, 273.2(f)(1)(vi), 273.2(i)(4)(i) and 274.1(a) and annualizing self-employment income at § 273.11(a)(1)(i) reflect current policy and therefore an implementation period is not required. The collection procedures authorized by § 273.18 apply to all claims established for overissuances that occurred after the effective date of this provision. Finally, the provisions relating to the Puerto Rico Block Grant shall be effective June 20, 1986.

The statutory provisions relating to the administrative review process are self-implementing and were effective as of the date the statute was enacted. Accordingly, the provisions at § 276.7(j), and 279.10(d) are effective retroactive to December 23, 1985 when Pub. L. 99-198 was enacted.

The statutory waiver authority pertaining to MRRB was also self-implementing. Accordingly, the provision at § 273.21(a)(4)(i)(A) and the second sentence of § 273.10(f)(7) are effective retroactive to August 31, 1981 when Pub. L. 97-35 was enacted. The provision at § 273.21(a)(4)(ii)(A) and the first two sentences of § 273.21(a)(4)(ii)(B) described in this action are retroactive to September 8, 1982 when Pub. L. 97-253 was enacted. The provisions at § 272.3, 273.21(a)(4)(i)(B), 273.21(a), 273.21(a)(3), the third sentence at § 273.10(f)(7) and the last two sentences of § 273.21(a)(4)(ii)(B) prescribed in this action are effective retroactive to December 2, 1983 when Pub. L. 98-204 was enacted.

List of Subjects

7 CFR Part 271

Administrative practice and procedure, Food stamps, Grant programs—social programs.

7 CFR Part 272

Alaska, Civil rights, Food stamps, Grant programs—social programs, Reports and recordkeeping requirements.

7 CFR Part 273

Administrative practice and procedures, Aliens, Claims, Food stamps, Fraud, Grant programs—social programs, Penalties, Reporting and recordkeeping requirements, Social security, Students.

7 CFR Part 274

Administrative practice and procedures, Food stamps, Grant programs—social programs, Reporting and recordkeeping requirements.

7 CFR Part 276

Administrative practice and procedures, Food stamps, Fraud, Grant programs—Social programs, Penalties.

7 CFR Part 279

Administrative practice and procedures, Food stamps, Groceries—retail groceries, General line—wholesaler.

7 CFR Part 285

Accounting, Food assistance programs, Grant programs—Agriculture, Grant programs—social programs, Intergovernmental relations, Puerto Rico, Technical assistance, Reporting and recordkeeping requirements.

Accordingly, 7 CFR Parts 271, 272, 273, 274, 276, 279 and 285 are amended as follows:

1. The authority citation of parts 271, 272, 273, 274, 276, 279 and 285 continues to read as follows:

Authority: 91 Stat 958 (7 U.S.C. 2011-2029).

PART 271—GENERAL INFORMATION AND REGULATIONS

§ 271.2 [Amended]

2. In § 271.2:

a. The definition of *"Elderly or disabled member"* is amended by redesignating paragraphs (3) through (6) as paragraphs (6) through (9) respectively, and adding new paragraphs (3), (4) and (5)

b. A new paragraph (10) is added to the definition of *"Elderly or disabled member."*

c. Newly redesignated paragraph (6) of the *"Elderly and disabled member"* definition is amended by adding the phrase "or non-service connected" after the word, "service-connected."

d. The definition of *"Supplemental Security Income (SSI)"* is revised. The additions and revisions read as follows:

§ 271.2 Definitions.

* * * * *

"Elderly or disabled member" * * * (3) receives federally or State-administered supplemental benefits under section 1616(a) of the Social Security Act provided that the eligibility to receive the benefits is based upon the disability or blindness criteria used under title XVI of the Social Security Act; (4) receives federally or State-administered supplemental benefits under section 212(a) of Pub. L. 93-66; (5) receives disability retirement benefits from a governmental agency because of a disability considered permanent under section 221(i) of the Social Security Act. * * * (10) receives an annuity payment under: section 2(a)(1)(iv) of the Railroad Retirement Act of 1974 *and* is

determined to be eligible to receive Medicare by the Railroad Retirement Board; or section 2(a)(i)(v) of the Railroad Retirement Act of 1974 and is determined to be disabled based upon the criteria used under Title XVI of the Social Security Act.

* * * * *

"Supplemental Security Income (SSI)" means monthly cash payments made under the authority of: (1) Title XVI of the Social Security Act, as amended, to the aged, blind and disabled; (2) section 1616(a) of the Social Security Act; or (3) section 212(a) of Pub. L. 93-66.

* * * * *

PART 272—REQUIREMENTS FOR PARTICIPATING STATE AGENCIES

3. In § 272.1 a new paragraph (g)(76) is added to read as follows:

§ 272.1 General terms and conditions.

* * * * *

(g) *Implementation* * * *

(76) Amendment No. 274. (i) The provisions of this amendment at §§ 271.2, 273.2, 273.5, 273.9, 273.10(d)(6), and 273.21(b) shall be implemented for all new applications and the current caseload no later than August 1, 1986. If, for any reason, a State agency fails to implement these provisions on this date, households shall be provided lost benefits which they would have received if the State agency had implemented these provisions as required.

(ii) The provisions of this amendment at §§ 273.18 and 285 shall be implemented June 20, 1986.

(iii) The provisions of this amendment at § 273.21(a)(4)(i)(A) and the second sentence in § 273.10(f)(7) are effective retroactive to August 31, 1981. Section § 273.21(a)(4)(ii)(A) and the first two sentences of § 273.21(a)(4)(ii)(B) described in this amendment are retroactive to September 8, 1982. The provisions of this amendment at §§ 272.3, 273.21(a), 273.21(a)(3), 273.21(a)(4)(i)(B), the third sentence at § 273.10(f)(7), and the last two sentences of § 273(a)(4)(ii)(B) are effective retroactive to December 2, 1983. The provision of this amendment at § 276.7(j) is effective retroactive to December 23, 1985.

4. In § 272.3, paragraph (c) is amended by redesignating paragraphs (c)(5) and (c)(6) as paragraphs (c)(6) and (c)(7), respectively, and adding a new paragraph (c)(5) to read as follows:

§ 272.3 Operating guidelines and forms.

* * * * *

(c) *Waivers* * * *

(5) Notwithstanding the preceding paragraphs, waivers of the certification period timeframes as described in § 273.10(f) may be granted by the Administrator of the Food and Nutrition Service or the Deputy Administrator for Family Nutrition Programs as provided in section 3(c) of the Act. Waivers authorized by this paragraph are not subject to the public comment provisions of § 272.3(d).

* * * * *

PART 273—CERTIFICATION OF ELIGIBLE HOUSEHOLDS

§ 273.2 [Amended]

5. In § 273.2:

a. Paragraph (b) is amended by adding a new sentence between the third and fourth sentences.

b. The first sentence in paragraph (f)(1)(vi) is revised.

c. Paragraph (f)(1)(viii)(A)(*1*) is amended by replacing the phrase, "paragraph (2)" with the phrase, "paragraphs (2), (3) and (4)".

d. Paragraph (f)(1)(viii)(A)(*2*) is amended by replacing the phrase, "paragraph (3)" with the phrase, "paragraph (6)".

e. Paragraph (f)(1)(viii)(A)(*3*) is amended by replacing the phrase, "paragraphs (4) and (5)" with the phrase, "paragraphs (7) and (8)".

f. Paragraph (f)(1)(viii)(A)(*4*) is amended by replacing the phrase, "paragraph (6)" with the phrase, "paragraphs (5) and (9)" wherever it appears.

g. A new paragraph (f)(1)(viii)(A)(*5*) is added.

h. The first sentence in paragraph (i)(4)(i)(B) is amended by replacing the phrase, "the household's residency," with the phrase, "the household's residency in accordance with § 273.2(f)(1)(vi),".

The additions and revisions read as follows:

§ 273.2 Application processing.

* * * * *

(b) *Food stamp application form.* * * *

The application shall also contain a statement to be signed by one adult household member which certifies, under penalty of perjury, the truth of the information contained in the application. * * *

* * * * *

(f) *Verification.* * * *

(1) *Mandatory verification.* * * *

(vi) *Residency.* The residency requirements of § 273.3 shall be verified except in unusual cases (such as homeless households, some migrant farmworker households, or households newly arrived in a project area) where verification of residency cannot reasonably be accomplished. * * *

* * * * *

(viii) *Disability* (A) * * *

(5) For individuals to be considered disabled under paragraph (10) of the definition, the household shall provide proof that the individual receives a Railroad Retirement disability annuity from the Railroad Retirement Board *and* has been determined to quality for Medicare.

* * * * *

6. In § 273.3, the fifth sentence is revised to read as follows:

§ 273.3 Residency.

* * * The State agency shall not require an otherwise eligible household to reside in a permanent dwelling or have a fixed mailing address as a condition of eligibility. * * *

7. In § 273.5, paragraph (b)(1) is amended by adding a new paragraph (vi). The paragraph reads as follows:

§ 273.5 Students.

* * * * *

(b) *Eligibility Requirements.*

(1) * * *

(vi) Be assigned to or placed in an institution of higher learning through a program under the Job Training Partnership Act.

* * * * *

§ 273.9 [Amended]

8. In § 273.9:

a. Paragraph (d)(6)(i) is amended by removing the second sentence and adding two new sentences after the first sentence.

b. Paragraphs (d)(6)(ii) through (d)(6)(vii) are redesignated as paragraphs (d)(6)(iii) through (d)(6)(viii) respectively

c. Newly amended paragraph (d)(6)(i) is further amended by designating the fifth sentence which begins with the phrase, "The standard utility allowance which includes a heating . . .", and all that follows as paragraph (d)(6)(ii).

d. A new second sentence is added after the first sentence in newly redesignated paragraph (d)(6)(ii).

e. Newly redesignated introductory paragraph (d)(6)(v) is revised.

f. Newly redesignated introductory paragraph (d)(6)(v)(B) is revised.

g. Newly redesignated paragraph (d)(6)(vii) is amended by replacing the reference to "(d)(6)(iv)(C)" with "(d)(6)(v)(C)", the second and third sentences are revised, and the last sentence is removed.

The additions and revisions read as follows:

§ 273.9 Income and deductions.

* * * * *

(d) *Income deductions.* * * *

(6) *Standard utility allowance* (i) * * * The State agency may establish either: (A) a separate standard utility allowance for individual utility expenses defined in paragraph (d)(5)(iii) of this section; (B) a single standard utility allowance which includes a heating or cooling component and which is available to all households which incur out-of-pocket heating or cooling expenses; or (C) two single standard utility allowances which include a heating or cooling component.

If the State agency chooses to develop two standard utility allowances for households which incur heating or cooling expenses, one standard shall be used for those households not receiving indirect energy assistance payments and the second standard shall only be used for those households which receive indirect energy assistance payments (e.g., Low Income Home Energy Assistance Act) and incur out-of-pocket heating or cooling expenses. * * *

(ii) * * * The standard utility allowance shall also be made available to those households receiving indirect energy assistance payments but who continue to incur out-of-pocket heating or cooling expenses during any month covered by the certification period. * * *

* * * * *

(v) The State agency may establish standard utility allowances as prescribed in paragraph (d)(b)(i) of this section.

* * * * *

(B) If the State agency establishes one or two single standard allowances, it shall include the cost of heating and/or cooling, cooking fuel, electricity not used to heat or cool the residence, the basic service fee for one telephone, water, sewerage, and garbage and trash collection. If the State agency elects to develop a single standard for those households which receive indirect energy assistance payments, the standard shall reflect the average out-of-pocket heating or cooling expense for such households.

* * * * *

(vii) * * * The State agency shall further advise the household when it has the right to switch between the use of actual utility costs and the standard utility allowance. The State agency shall permit the household to switch between actual utility costs and the standard utility allowance at the time of recertification and one additional time during each twelve-month period.

* * * * *

§ 273. [Amended]

9. In § 273.10:

a. Paragraph (d) is amended by adding a new paragraph (d)(6).

b. Paragraph (f) is amended by adding a new paragraph (f)(7).

The addition and revision read as follows:

§ 273.10 Determining household eligibility and benefit levels.

* * * * *

(d) *Determining deductions* * * *

(6) *Energy Assistance Payments.* The State agency shall prorate energy assistance payments (e.g., Low Income Home Energy Assistance Act) as provided for in § 273.9(d) over the entire heating or cooling season the payment is intended to cover.

* * * * *

(f) *Certification periods* * * *

(7) Households required to submit monthly reports in accordance with § 273.21(b) shall be certified for not less than six months and not more than 12 months. The limit of 12 months may be waived for these households if the State agency can demonstrate that such a waiver would result in improved administration of the Program. The six-month minimum may be waived for households subject to less frequent than monthly reporting if the State agency can demonstrate that such a waiver would result in improved administration of the Program.

* * * * *

10. In § 273.11, paragraph (a)(1)(i) is amended by adding two new sentences after the second sentence to read as follows:

§ 273.11 Action on households with special circumstances.

(a) *Self-employment income.* * * *

(1) *Annualizing self-employment income*

(i) * * * However, if the averaged annualized amount does not accurately reflect the household's actual circumstances because the household has experienced a substantial increase or decrease in business, the State agency shall calculate the self-employment income on anticipated earnings. The State agency shall not calculate self-employment income on the basis of prior income (e.g. income tax returns) when the household has experienced a substantial increase or decrease in business. * * *

* * * * *

11. In § 273.18, introductory paragraph (a) and paragraph (f) are revised.

The addition and revision read as follows:

§ 273.18 Claims against households.

(a) *Establishing claims against households.* All adult household members shall be jointly and severally liable for the value of any overissuance of benefits to the household. The State agency shall establish a claim against any household that has received more food stamp benefits than it is entitled to receive or any household which contains an adult member who was an adult member of another household that received more food stamp benefits than it was entitled to receive.

* * * * *

(f) *Change in household composition.* State agencies shall initiate collection action against any or all of the adult members of a household at the time an overissuance occurred. Therefore, if a change in household composition occurs, State agencies may pursue collection action against any household which has a member who was an adult member of the household that received the overissuance. The State agency may also offset amount of the claim against restored benefits owed to any household which contains a member who was an adult member of the original household at the time the overissuance occurred. Under no circumstances may a State agency collect more than the amount of the claim. In pursuing claims, the State agency may use any of the appropriate methods of collecting payments in § 273.18(g).

* * * * *

§ 273.21 [Amended]

12. In § 273.21:

a. Introductory paragraph (a) is amended by adding two new sentences after the third sentence.

b. Paragraph (a)(3) is amended by adding a new sentence to the end of the paragraph.

c. A new paragraph (a)(4) is added.

d. Paragraphs (b)(1) and (b)(2) are revised.

e. Paragraphs (c)(3) through (c)(5) are redesignated as paragraphs (c)(4) through (c)(6) respectively and a new paragraph (c)(3) is added. The additions and revisions read as follows:

§ 273.21 Monthly reporting retrospective budgeting (MRRB).

(a) *System design.* * * * The monthly report shall be the sole reporting requirement for such information included on the monthly report. The State agency shall not require the household to report any changes included on the monthly report prior to the submission of the next monthly report. * * *

* * * * *

(3) * * * These limits may be waived for certain categories of households if the State agency can demonstrate that the waiver will improve the administration of the program.

(4) *Waivers* (i) FNS may approve waivers of the budgeting requirements of this section under the following criteria:

(A) Waivers may be approved to conform budgeting procedures in the AFDC Program.

(B) Waivers from retrospective budgeting may be approved for households waived from monthly reporting under paragraph (a)(4)(ii) of this section upon a showing by the State agency that the waiver will improve the administration of the Program.

(ii) FNS may approve waivers from monthly reporting under the following criteria:

(A) Waivers from monthly reporting may be approved for those categories of PA households which are not subject to monthly reporting in the AFDC Program under Title IV of the Social Security Act, as amended; not subject to monthly reporting under 45 CFR Part 233.36; or waived from monthly reporting in the AFDC Program by the Office of Family Assistance.

(B) FNS may approve proposals by the State agency to select categories of households for less frequent than monthly reporting. Approval is subject to the submission of data by the State agency indicating that the proposal will result in a net cost savings to the Federal Government. Subject to FNS approval, the State agency may designate alternative methods of reporting for households reporting at less frequent than monthly intervals under this paragraph. Such alternative methods include written reports, recertification interviews and interviews during the certification period.

(b) *Included and excluded households.* * * * (1) An MRRB system shall include all households with earnings and a recent work history. The State agency shall use the recent work history definition that is used in its AFDC Program for public and non-public assistance households. The State agency may extend retrospective budgeting, monthly reporting, or both to other categories of households, except where prohibited by paragraph (b)(2) of this section. However, a household required to monthly report shall be subject to retrospective budgeting.

(2) An MRRB system shall exclude migrant farmworker households while they are in the job stream and households in which all adult members are elderly or disabled and have no earned income.

* * * * *

(c) *Information on MRRB* * * *

(3) An explanation that information required to be reported on the monthly report is the only reporting requirement for such information;

* * * * *

PART 274—ISSUANCE AND USE OF FOOD COUPONS

13. In § 274.1, paragraph (a) is revised to read as follows:

§ 274.1 State Agency Issuance Responsibilities.

(a) *Basic issuance requirements.* Each State agency is responsible for the timely and accurate issuance of benefits to certified households in accordance with these regulations. Households comprised of elderly or disabled members who have difficulty reaching an issuance office to obtain their coupon allotments, and households which do not reside in a permanent dwelling or at a fixed mailing address, shall be given assistance in obtaining their coupons. State agencies shall assist these households by arranging for mail issuance or direct delivery of coupons to them, by assisting the households in finding authorized representatives who can act on their behalf or by using other appropriate means to assure delivery of benefits. The State agency shall establish an issuance and accountability system which will ensure that (1) only certified households receive benefits; (2) all certified households have access to their benefits; (3) benefits are timely distributed in the correct amounts; (4) coupons are accepted and stored with due security after their delivery to receiving points within the State; and (5) coupon issuance and reconciliation activities are properly conducted and accurately reported to FNS.

* * * * *

PART 276—STATE AGENCY LIABILITIES AND FEDERAL SANCTIONS

14. In § 276.7, the last sentence in paragraph (j) is revised to read as follows:

§ 276.7 Administrative review process.

* * * * *

(j) *Judicial review.* * * * The final determination shall remain in effect during the period the judicial review or any appeal therefrom is pending unless the court temporarily stays such administrative action after a showing that irreparable injury will occur absent a stay and that the State agency is likely to prevail on the merits of the case.

* * * * *

PART 279—ADMINISTRATIVE AND JUDICIAL REVIEW—FOOD RETAILERS AND WHOLESALERS

15. In § 279.10, paragraph (d) is revised to read as follows:

Subpart C—Judicial Review

§ 279.10 Judicial review.

* * * * *

(d) *Stay of action.* During the pendency of any judicial review, or any appeal therefrom, the administrative action under review shall remain in force unless the firm makes a timely application to the court and after hearing thereon, the court stays the administrative action after a showing that irreparable injury will occur absent a stay and that the firm is likely to prevail on the merits of the case.

16. In § 279.11, the undesignated paragraph is designated as paragraph (a) and a new paragraph (b) is added to read as follows:

§ 279.11 Implementation of amendments relating to administrative and judicial review.

* * * * *

(b) *Amendment No. 274.* The program change of *Amendment No. 274* at § 279.10(d) is effective retroactively to December 23, 1985.

PART 285—PROVISION OF A NUTRITION ASSISTANCE GRANT FOR THE COMMONWEALTH OF PUERTO RICO

§ 285.2 [Amended]

17. In § 285.2, paragraph (a) is amended by replacing in the second sentence the phrase, "$825,000,000 for each fiscal year except that the amount payable to Puerto Rico for final quarter of fiscal year 1982 shall be $206,500,000." with the phrase, "amounts appropriated for this purpose for each fiscal year.".

§ 285.3 [Amended]

18. In § 285.3, paragraph (b)(1) is amended by replacing in the first and second lines of the paragraph the phrase, "a single agency which shall be" with the phrase, "the agency or agencies directly".

Corrections

19. In FR Doc. 86-6486, appearing at page 10764, as Part V, in the issue of Friday, March 28, 1986, make the following corrections:

a. On page 10764, in column one, a typographical error is being corrected.

The reference to the date of "October 3, 1981" appearing in the section entitled "DATES", is corrected to Read "October 3, 1984".

§ 273.1 [Corrected]

b. On page 10783, in the third column, § 273.1(c)(1), the phrase "elderly or disabled children" should read "elderly or disabled parents". The provision at § 273.1(a)(2) of the March 28 final rule pertinent to this phrase does not contain a provision relative to children living with elderly or disabled parents.

§273.11 [Corrected]

c. On page 10788, in the second column, § 273.11(h)(2)(ii), the regulatory references to "(h)(2)(i)(B) and (h)(2)(i)(C)" should read "(h)(2)(i)(A), and "(h)(2)(i)(B)", respectively. There is no paragraph (h)(2)(i)(C) at 7 CFR 273.11.

20. In FR Doc. 86-7135, appearing at page 11009, in the issue of Tuesday, April 1, 1986, make the following correction:

§ 273.8 [Corrected]

On page 11011, in the third column, amendatory statement number 3(b) appearing under § 273.8 should read: paragraph (i)(4) is amended by replacing the references of "$1,250" and "$1,500" with $1,750" and "$2,000", respectively.

Dated: May 14, 1986.

Robert E. Leard,

Administrator.

[FR Doc. 86-11256 Filed 5-20-86; 8:45 am]

BILLING CODE 3410-30-M

Reader Aids

Federal Register
Vol. 51, No. 98
Wednesday May 21, 1986

INFORMATION AND ASSISTANCE

SUBSCRIPTIONS AND ORDERS

Subscriptions (public)	202-783-3238
Problems with subscriptions	275-3054
Subscriptions (Federal agencies)	523-5240
Single copies, back copies of FR	783-3238
Magnetic tapes of FR, CFR volumes	275-1184
Public laws (Slip laws)	275-3030

PUBLICATIONS AND SERVICES

Daily Federal Register

General information, index, and finding aids	523-5227
Public inspection desk	523-5215
Corrections	523-5237
Document drafting information	523-5237
Legal staff	523-4534
Machine readable documents, specifications	523-3408

Code of Federal Regulations

General information, index, and finding aids	523-5227
Printing schedules and pricing information	523-3419

Laws 523-5230

Presidential Documents

Executive orders and proclamations	523-5230
Public Papers of the President	523-5230
Weekly Compilation of Presidential Documents	523-5230

United States Government Manual 523-5230

Other Services

Library	523-4986
Privacy Act Compilation	523-4534
TDD for the deaf	523-5229

FEDERAL REGISTER PAGES AND DATES, MAY

16155-16280 1
16281-16484 2
16485-16654 5
16655-16806 6
16807-16992 7
16993-17166 8
17167-17308 9
17309-17442 12
17443-17606 13
17607-17728 14
17729-17916 15
17917-18302 16
18303-18428 19
18429-18558 20
18559-18754 21

CFR PARTS AFFECTED DURING MAY

At the end of each month, the Office of the Federal Register publishes separately a List of CFR Sections Affected (LSA), which lists parts and sections affected by documents published since the revision date of each title.

1 CFR
315 16659
Proposed Rules:
Ch. III 18335

3 CFR
Executive Orders:
12557 18429
12558 18431
Proclamations:
5470 16655
5471 16657
5472 17309
5473 17311
5474 17313
5475 17607
5476 17609
5477 17729
5478 18296
5479 18303
5480 18305
5481 18433
5482 18559
Administrative Orders:
Memorandums:
May 15, 1986 18294

5 CFR
532 18561
550 16669
890 18562
Proposed Rules:
831 16701

7 CFR
2 17167
25 17611
25a 17611
70 17278
210 16807
225 16807
226 16807
246 16155
271 18744
272 ..... 16281, 18744
273 ..... 16281, 18744
274 18744
276 18744
279 18744
285 18744
301 16993
400 17315
449 17611
704 17167
736 17306
915 18565
917 16670
918 16812
925 16285
944 18565
982 17317
1022 17922
1240 17917
1435 16285
1468 17611
1472 17612
1806 17920
1823 17922
1940 17443
1941 17922
1943 17922
1944 ..... 17922, 17443
1945 17922
1955 ..... 17922, 18435
1962 17922
1965 17922
3015 17169
Proposed Rules:
28 17193
46 18590
52 17349
911 16347
980 17354
982 17354
1097 17982
1240 16702
1476 18552
1493 16532
1747 17034

8 CFR
204 18568
238 16288
Proposed Rules:
212 18591
214 18591

9 CFR
77 17001
78 17922
91 17318
92 16485
161 17318
162 17318
Proposed Rules:
75 18455
301 18456
312 18456
327 ..... 17196, 18456
381 18456

10 CFR
Proposed Rules:
19 17634
20 ..... 16535, 17634
30 17634
31 17634
32 17634
34 17634
40 17634
50 ..... 17361, 17634
61 17634
70 17634

300 ... 16854

12 CFR

Ch. VII ... 16292
22 ... 18307
201 ... 16672
353 ... 16485
556 ... 16288, 16501
611 ... 16291
Proposed Rules:
Ch. V ... 16542, 16550
204 ... 16855
523 ... 16536
541 ... 16542
545 ... 16542, 17634
561 ... 16542, 16550
563 ... 16542, 16550, 17634
570 ... 16542
611 ... 17035
614 ... 17035
615 ... 17035
618 ... 17035
740 ... 16710
741 ... 16710
745 ... 16710

13 CFR

120 ... 17002, 18436
122 ... 18436
123 ... 17002
309 ... 16292
Proposed Rules:
121 ... 16176

14 CFR

11 ... 18308
25 ... 18236
39 ... 16155, 16294, 16506-16508, 16806, 17005-17009, 17322-17324, 17613-17615, 17731, 17923-17926, 18308, 18571-18576
71 ... 16295, 16510, 16610, 16673, 17325-17326, 17461-17463, 17927, 18437, 18578
73 ... 17615
75 ... 16295, 16814, 17463
93 ... 18309, 18310
95 ... 16814
97 ... 17327
121 ... 17274
125 ... 17274
127 ... 17274
129 ... 17274
135 ... 17274
Proposed Rules:
Ch. I ... 17743, 18599
21 ... 17362
23 ... 17362
39 ... 16347, 17049-17056, 17362, 17364, 17644-17649, 17743, 17745, 18335, 18600, 18602
71 ... 17365, 17986, 18461, 18603, 18604
73 ... 16858, 17647, 18336
303 ... 17490, 18605

15 CFR

376 ... 16674
379 ... 16296
399 ... 16818
Proposed Rules:
21 ... 18605
379 ... 17986

16 CFR

13 ... 16510-16513
305 ... 16516
Proposed Rules:
13 ... 16566, 17197

17 CFR

1 ... 17464
5 ... 17464
16 ... 17464
33 ... 17464
210 ... 17328
211 ... 17331
240 ... 17732, 18578

18 CFR

271 ... 16157

19 CFR

12 ... 17332
101 ... 16158
115 ... 16159
178 ... 16159
Proposed Rules:
175 ... 17746
211 ... 16858

20 CFR

404 ... 16166, 16818, 17173, 17616, 18312
416 ... 16818, 17332, 17616
Proposed Rules:
404 ... 18611
416 ... 17057, 17200, 18611

21 CFR

5 ... 17010
74 ... 16674
81 ... 16674
82 ... 16674
176 ... 16167, 17011
177 ... 16827
182 ... 16829
186 ... 16829
330 ... 16258, 18580
331 ... 16258, 18580
332 ... 16258, 18580
357 ... 16258, 18580
441 ... 16516
522 ... 18313
558 ... 16675, 18314
561 ... 17174
630 ... 18580
884 ... 16652
1308 ... 17476
Proposed Rules:
630 ... 16620
805 ... 16792
1301 ... 17494
1306 ... 17494

22 CFR

Proposed Rules:
22 ... 17650
213 ... 17068

23 CFR

625 ... 16830
626 ... 16830
630 ... 16830
645 ... 16830
650 ... 16830
655 ... 16830
666 ... 16830
810 ... 16830
922 ... 16830

24 CFR

200 ... 17927
251 ... 17175
255 ... 17175
882 ... 16296
990 ... 16835

26 CFR

1 ... 16297, 16298, 17929, 17936
7 ... 17936
53 ... 16300, 17732
54 ... 16300
141 ... 16300
301 ... 16300
602 ... 16298, 16300, 17936
Proposed Rules:
1 ... 16348, 17989, 17990

27 CFR

5 ... 16167

28 CFR

0 ... 16841, 16842
16 ... 16676
21 ... 16171
Proposed Rules:
16 ... 16724

29 CFR

102 ... 17732
2676 ... 16677, 17733
Proposed Rules:
1915 ... 17991
1926 ... 17203
1952 ... 18337

30 CFR

251 ... 17175
252 ... 17175
914 ... 17478
915 ... 17176
935 ... 16677
938 ... 18314
Proposed Rules:
75 ... 17284
250 ... 16348
256 ... 16348
731 ... 16859
732 ... 16859
761 ... 16859
772 ... 16859
773 ... 16859
779 ... 16859
780 ... 16859
783 ... 16859
784 ... 16859
913 ... 17204
950 ... 18621

31 CFR

306 ... 16174
357 ... 18260
Proposed Rules:
357 ... 17205

32 CFR

145 ... 17178
360 ... 17481
513 ... 17961
706 ... 16174, 16680-16682, 17182-17183
1602 ... 17618
1605 ... 17618
1609 ... 17618
1618 ... 17618
1621 ... 17618
1624 ... 17618
1630 ... 17618
1633 ... 17618
1636 ... 17618
1639 ... 17618
1642 ... 17618
1648 ... 17618
1651 ... 17618
1653 ... 17618
1656 ... 17618
1657 ... 17618

33 CFR

100 ... 17012, 17183, 17961
117 ... 16306, 17012
118 ... 16306
153 ... 17962
162 ... 17013
165 ... 17016, 17332, 17968, 18321
402 ... 16843
Proposed Rules:
100 ... 17204, 18344
115 ... 18345
117 ... 16568, 17070, 17993
126 ... 18276
127 ... 18276
166 ... 17071
167 ... 17071

34 CFR

200 ... 18404
204 ... 18404
300 ... 17904
768 ... 18580
769 ... 18580
770 ... 18580
771 ... 18580
772 ... 18580
Proposed Rules:
222 ... 17720
796 ... 17494

36 CFR

251 ... 16682
1153 ... 17734
1254 ... 17185
1258 ... 17185
Proposed Rules:
62 ... 16349
223 ... 17994
1228 ... 17497
1232 ... 17497
1236 ... 17497
1239 ... 17497
1250 ... 17206
1254 ... 17207

37 CFR

Proposed Rules:
1 ... 18290
2 ... 18290

38 CFR

3 ... 17628
21 ... 16314, 16317, 16517, 17188
Proposed Rules:
4 ... 16350
17 ... 17651
21 ... 17995, 17996
26 ... 17656

39 CFR

3 ... 18323
4 ... 18323
10 ... 17017, 17969
111 ... 17019, 17629
951 ... 16517

Proposed Rules:

10 ... 17073
265 ... 17997
310 ... 17366
320 ... 17366

40 CFR

52 ... 17334, 18438, 18440
60 ... 18538
147 ... 16683
154 ... 17716
155 ... 17716
158 ... 17716
162 ... 17716
166 ... 16844
172 ... 17716
180 ... 16688, 16844, 18585
260 ... 16422
264 ... 16422
265 ... 16422
270 ... 16422
271 ... 17737, 17739
704 ... 17336, 18323
712 ... 18323
716 ... 17336, 18323
721 ... 16684, 17740
763 ... 18326
799 ... 18443
1502 ... 16846

Proposed Rules:

52 ... 17208, 17210
65 ... 16353
180 ... 16178
261 ... 16860
421 ... 18530
721 ... 17499
795 ... 17854, 17872
799 ... 17747, 17854-17883

41 CFR

51-2 ... 17188
51-5 ... 17189
101-17 ... 17630

Proposed Rules:

51-1 ... 17212
51-3 ... 17212

42 CFR

400 ... 16772
405 ... 16772
412 ... 16772
433 ... 16318
442 ... 16688, 17340
489 ... 16772

Proposed Rules:

34 ... 17214
51e ... 16724
53 ... 18462
60 ... 18728
400 ... 16792
405 ... 16792, 17997
409 ... 17997
442 ... 17997
489 ... 16792

43 CFR

4 ... 16319, 18326-18328

Proposed Rules:

4 ... 18345
11 ... 16636

Public Land Orders:

6615 ... 18586

44 CFR

64 ... 17483
65 ... 17485
67 ... 17486

Proposed Rules:

67 ... 17499
205 ... 17747
222 ... 17501

46 CFR

307 ... 18328
310 ... 17740
552 ... 17025

Proposed Rules:

326 ... 17659
510 ... 17754
530 ... 18621
572 ... 16354
580 ... 17754
582 ... 17754

47 CFR

Ch. I ... 16688, 17631
1 ... 17969
2 ... 16847
18 ... 17970
21 ... 17969
25 ... 18444
63 ... 18446
68 ... 16689
69 ... 17026
73 ... 17027, 18448
74 ... 18448
76 ... 18448
87 ... 17341
90 ... 18330
97 ... 17029, 17342

Proposed Rules:

1 ... 16321, 18463
18 ... 18004
21 ... 18005, 18007
22 ... 17366, 18623
31 ... 16178
43 ... 18463
67 ... 17756
73 ... 16322, 16324, 16726
90 ... 17757, 18464
16357-16360, 17367
97 ... 17074

48 CFR

25 ... 16802
52 ... 16802
232 ... 18587
246 ... 18587
252 ... 18587
501 ... 16690
504 ... 16690
513 ... 16175
514 ... 16690
515 ... 16690
525 ... 16692
552 ... 16692
553 ... 16175, 16690

Proposed Rules:

6 ... 16988
8 ... 16988
15 ... 16988
41 ... 16988
52 ... 16462, 16988

49 CFR

232 ... 17300
391 ... 17568
571 ... 16325, 16517, 16694, 16847
1002 ... 18589
1011 ... 16851
1105 ... 16851
1144 ... 18333
1152 ... 16851

Proposed Rules:

Ch. X ... 18346
192 ... 16362, 18465
193 ... 18007
391 ... 17572
395 ... 17214
565 ... 18347
571 ... 17218, 18009
604 ... 18466
630 ... 17144, 17145
1135 ... 16363, 18009
1312 ... 16877, 17368

50 CFR

17 ... 16474, 16526, 17343, 17971-17977, 18451
18 ... 17980
301 ... 16466, 16471
604 ... 16530
611 ... 17030, 18333
630 ... 16530
642 ... 16530
650 ... 16520
652 ... 17346
655 ... 17189
658 ... 17487
661 ... 16520, 18451
672 ... 17632
675 ... 18333

Proposed Rules:

17 ... 16363, 16483, 16569, 18010, 18624-18630
20 ... 18349
23 ... 17368, 18634
215 ... 17896
216 ... 16365
654 ... 17075, 18637
683 ... 17370

LIST OF PUBLIC LAWS

Last List May 20, 1986

This is a continuing list of public bills from the current session of Congress which have become Federal laws. The text of laws is not published in the **Federal Register** but may be ordered in individual pamphlet form (referred to as "slip laws") from the Superintendent of Documents, U.S. Government Printing Office, Washington, DC 20402 (phone 202-275-3030).

S.J. Res. 288 / Pub. L. 99-305

To designate the month of May 1986, as "National Birds of Prey Month." (May 19, 1986; 100 Stat. 441; 1 page) Price: $1.00

S.J. Res. 324 / Pub. L. 99-306

To designate the week beginning May 18, 1986, as "National Digestive Diseases Awareness Week." (May 19, 1986; 100 Stat. 442; 2 pages) Price: $1.00