7-9-86
Vol. 51 No. 131
Pages 24799-25026

federal register

Wednesday
July 9, 1986

Briefings on How To Use the Federal Register—
For information on briefings in Washington, DC, Seattle, WA, and San Francisco, CA, see announcement on the inside cover of this issue.

FEDERAL REGISTER Published daily, Monday through Friday, (not published on Saturdays, Sundays, or on official holidays), by the Office of the Federal Register, National Archives and Records Administration, Washington, DC 20408, under the Federal Register Act (49 Stat. 500, as amended; 44 U.S.C. Ch. 15) and the regulations of the Administrative Committee of the Federal Register (1 CFR Ch. I). Distribution is made only by the Superintendent of Documents, U.S. Government Printing Office, Washington, DC 20402.

The **Federal Register** provides a uniform system for making available to the public regulations and legal notices issued by Federal agencies. These include Presidential proclamations and Executive Orders and Federal agency documents having general applicability and legal effect, documents required to be published by act of Congress and other Federal agency documents of public interest. Documents are on file for public inspection in the Office of the Federal Register the day before they are published, unless earlier filing is requested by the issuing agency.

The **Federal Register** will be furnished by mail to subscribers for $300.00 per year, or $150.00 for 6 months, payable in advance. The charge for individual copies is $1.50 for each issue, or $1.50 for each group of pages as actually bound. Remit check or money order, made payable to the Superintendent of Documents, U.S. Government Printing Office, Washington, DC 20402.

There are no restrictions on the republication of material appearing in the **Federal Register**.

Questions and requests for specific information may be directed to the telephone numbers listed under INFORMATION AND ASSISTANCE in the READER AIDS section of this issue.

How To Cite This Publication: Use the volume number and the page number. Example: 51 FR 12345.

THE FEDERAL REGISTER
WHAT IT IS AND HOW TO USE IT

FOR: Any person who uses the Federal Register and Code of Federal Regulations.

WHO: The Office of the Federal Register.

WHAT: Free public briefings (approximately 2 1/2 hours) to present:

1. The regulatory process, with a focus on the Federal Register system and the public's role in the development of regulations.
2. The relationship between the Federal Register and Code of Federal Regulations.
3. The important elements of typical Federal Register documents.
4. An introduction to the finding aids of the FR/CFR system.

WHY: To provide the public with access to information necessary to research Federal agency regulations which directly affect them. There will be no discussion of specific agency regulations.

WASHINGTON, DC

WHEN: July 11; at 9 am.

WHERE: Office of the Federal Register,
First Floor Conference Room,
1100 L Street NW., Washington, DC.

RESERVATIONS: Abram Primus 202-523-3419
Ina Masters 202-523-3419

SEATTLE, WA

WHEN: July 22; at 1:30 pm.

WHERE: North Auditorium,
Fourth Floor, Federal Building,
915 2nd Avenue, Seattle, WA.

RESERVATIONS: Call the Portland Federal Information Center on the following local numbers:

Seattle	206-442-0570
Tacoma	206-383-5230
Portland	503-221-2222

SAN FRANCISCO, CA

WHEN: July 24; at 1:30 pm.

WHERE: Room 2007, Federal Building,
450 Golden Gate Avenue,
San Francisco, CA.

RESERVATIONS: Call the San Francisco Federal Information Center, 415-556-6600

Contents

Federal Register
Vol. 51, No. 131
Wednesday, July 9, 1986

Agricultural Marketing Service
RULES
Almonds grown in California, 24808, 24809 (2 documents)
Pears, plums, and peaches grown in California, 24807

Agriculture Department
See also Agricultural Marketing Service
RULES
Organization, functions, and authority delegations:
Under Secretary for Small Community and Rural Development et al., 24806
NOTICES
Agency information collection activities under OMB review, 24882

Civil Rights Commission
NOTICES
Meetings; State advisory committees:
Michigan, 24882
Utah, 24882
Meetings; Sunshine Act, 24967

Commerce Department
See also International Trade Administration; Minority Business Development Agency; National Oceanic and Atmospheric Administration
NOTICES
Agency information collection activities under OMB review, 24883
Economic statistics, Federal; inquiry on quality [*Editorial Note:* For a document on this subject see entry under Management and Budget Office]

Committee for the Implementation of Textile Agreements
NOTICES
Cotton, wool, and man-made textiles:
Pakistan, 24886

Commodity Futures Trading Commission
PROPOSED RULES
Foreign options and futures transactions, 24852

Customs Service
RULES
Country of origin markings:
Footwear and containers (shoe boxes), 24814

Defense Department
PROPOSED RULES
Federal Acquisition Regulation (FAR):
Cost accounting standards, 24971

Education Department
NOTICES
Agency information collection activities under OMB review, 24887

Employment and Training Administration
NOTICES
Job Training Partnership Act:
Migrant and seasonal farmworker programs—
State planning estimates and allocation formula, 24951

Energy Department
See also Hearings and Appeals Office, Energy Department
RULES
Coal loan guarantee program:
Activity suspension, 24810

Environmental Protection Agency
RULES
Air quality planning purposes; designation of areas:
Illinois, 24825
Water pollution; effluent guidelines for point source categories:
Best conventional pollutant control technology, 24974
PROPOSED RULES
Air quality implementation plans; approval and promulgation; various States:
Alabama, 24853
Air quality planning purposes; designation of areas:
Florida, 24855
Puerto Rico, 24854
Hazardous waste:
Identification and listing, and land disposal restrictions—
Report availability, 24856
NOTICES
Environmental auditing; policy statement, 25004
Pesticide, food, and feed additive petitions:
Mobay Chemical Corp. et al., 24893
Pesticide programs:
Standard Evaluation Procedures—
Availability, 24894
Pesticides; experimental use permit applications:
Brea Agricultural Service, Inc., et al., 24893
Pesticides; temporary tolerances:
E.I. duPont de Nemours & Co., 24894
Water pollution; discharge of pollutants (NPDES):
California, 24895
Gulf of Mexico, 24897

Equal Employment Opportunity Commission
NOTICES
Agency information collection activities under OMB review, 24927

Executive Office of the President
See Management and Budget Office

Federal Aviation Administration
RULES
Airworthiness directives:
CFM International, 24811
Mitsubishi Heavy Industries, Ltd., 24812
VOR Federal airways, 24813
PROPOSED RULES
Air traffic operating and flight rules, etc.:
Rulemaking petition; automatic altitude reporting, 24845
Air traffic operating and flight rules:
Rulemaking petition; deletion of requirement for medical certificate
Correction, 24851
Airworthiness directives:
Sikorsky, 24844

Federal Communications Commission
RULES
Radio stations; table of assignments:
Texas and Oklahoma, 24827
PROPOSED RULES
Communications equipment:
Industrial, scientific, and medical equipment; RF lighting devices, radiation limits, 24872
Radio stations; table of assignments:
Alabama, 24872
Arkansas, 24872
Florida, 24873
Iowa, 24873
Louisiana, 24873
Missouri, 24874
(2 documents)
North Carolina, 24875
Ohio, 24875
Oklahoma, 24876
South Dakota, 24875
Television stations; table of assignments:
California, 24876
Florida, 24877
Texas, 24876
NOTICES
Agency information collection activities under OMB review, 24928
(2 documents)
Rulemaking proceedings; petitions filed, granted, denied, etc., 24929
Applications, hearings, determinations, etc.:
Franklin Broadcasting et al., 24928
Freedom Community Broadcasting, Inc., et al., 24928
Routt, Alan, et al., 24929

Federal Deposit Insurance Corporation
NOTICES
Meetings; Sunshine Act, 24966

Federal Highway Administration
NOTICES
Environmental statements; notice of intent:
Lincoln, NE, 24964

Federal Maritime Commission
NOTICES
Agency information collection activities under OMB review, 24929, 24930
(2 documents)

Federal Mediation and Conciliation Service
RULES
Federal claims collection, 24816

Federal Reserve System
NOTICES
Meetings; Sunshine Act, 24966, 24967
(3 documents)
Applications, hearings, determinations, etc.:
Baii Holdings, S.A., et al., 24930
Banc One Corp. et al., 24930
Banco De Vizcaya; correction, 24931
Premier Bankshares Corp., 24932
Ranches, Inc., 24931
TB&C Bancshares, Inc., 24931

Fish and Wildlife Service
NOTICES
Environmental statements; availability, etc.:
Charles M. Russell National Wildlife Refuge, MT, 24935

Food and Drug Administration
RULES
Color additives:
Iron oxides, chromium oxide greens, and titanium dioxide; use in contact lenses, 24815
Food labeling:
Sulfiting agents, 25012
GRAS or prior-sanctioned ingredients:
Sulfiting agents; use on fruits and vegetables served or sold raw to consumers, 25021
NOTICES
Medical devices; premarket approval:
Hybrid Percutaneous Transluminal Coronary Angioplasty Catheter, 24932

General Services Administration
PROPOSED RULES
Federal Acquisition Regulation (FAR):
Cost accounting standards, 24971

Health and Human Services Department
See also Food and Drug Administration; Health Care Financing Administration; Health Resources and Services Administration; National Institutes of Health
PROPOSED RULES
Medicare and medicaid:
Fraud and abuse provisions; sanction authorities, 24857

Health Care Financing Administration
PROPOSED RULES
Medicare and medicaid:
Fraud and abuse provisions; sanction authorities
[*Editorial Note:* For a document on this subject, see entry under Health and Human Services Department]
NOTICES
Medicaid:
State plan amendments, reconsideration; hearings—Texas, 24933

Health Resources and Services Administration
NOTICES
Meetings; advisory committees:
July, 24934

Hearings and Appeals Office, Energy Department
NOTICES
Applications for exception:
Cases filed, 24888
Decisions and orders, 24889

Housing and Urban Development Department
PROPOSED RULES
Fair housing:
State and local laws; recognition of substantially equivalent laws, 24852

Intergovernmental Relations Advisory Commission
RULES
Organization and bylaws, 24799

Interior Department
See Fish and Wildlife Service; Land Management Bureau; Minerals Management Service; National Park Service

International Trade Administration
NOTICES
Antidumping
Stainless steel wire rods from—
France, 24885
Antidumping:
Administrative review requests, 24883, 24884 (2 documents)
Antidumping and countervailing duties:
Administrative review requests, 24884, 24885

International Trade Commission
NOTICES
Agency information collection activities under OMB review, 24950
Import investigations:
Multi-level touch control lighting switches, 24946
Import investigations:
Amorphous metal alloys and articles, 24945
Anhydrous sodium metasilicate from United Kingdom, 24945
Electronic chromatogram analyzers and components, 24945
Oil country tubular goods from—
Israel, 24947
Porcelain-on-steel cooking ware from—
Spain, 24948
Prefabricated bow forms, 24949
Soft sculpture dolls (Cabbage Patch Kids), related literature and packaging, 24949
Ventilated motorcycle helmets, 24950

Justice Department
NOTICES
Newspaper operating agreements; Detroit News and Detroit Free Press, 24951

Labor Department
See Employment and Training Administration

Land Management Bureau
NOTICES
Meetings:
Winnemucca District Advisory Council, 24936
Realty actions; sales, leases, etc.:
Arizona; correction, 24937
California, 24937
Idaho, 24938
Montana, 24937
Nevada, 24939
Survey plat filings:
Colorado, 24939
Michigan, 24940
Withdrawal and reservation of lands:
Washington, 24940

Legal Services Corporation
RULES
Grant funds, expenditure, 24826

Management and Budget Office
NOTICES
Economic statistics, Federal; inquiry on quality, 24955

Minerals Management Service
NOTICES
Environmental statements; availability, etc.:
Pacific OCS—
Oil and gas operations, 24940

Minority Business Development Agency
NOTICES
Financial assistance application announcements:
Texas, 24885

National Aeronautics and Space Administration
PROPOSED RULES
Federal Acquisition Regulation (FAR):
Cost accounting standards, 24971

National Highway Traffic Safety Administration
PROPOSED RULES
Motor vehicle safety standards:
Air brake systems, 24877

National Institutes of Health
NOTICES
Meetings:
Biomedical Research Technology Review Committee, 24934

National Oceanic and Atmospheric Administration
RULES
Fishery conservation and management:
Atlantic sea scallop, 24841
Ocean salmon off coasts of Washington, Oregon, and California, 24842
Marine mammals:
North Pacific fur seals; subsistance taking, 24828
PROPOSED RULES
Fishery conservation and management:
Atlantic mackerel, squid, and butterfish, 24880
NOTICES
Coastal zone management programs and estuarine sanctuaries:
State programs—
California; appeal withdrawn, 24886

National Park Service
NOTICES
Concessioner applications, prospective, 24945
National trails system:
Appalachian National Scenic Trail—
Rights-of-way relocation, 24941

Nuclear Regulatory Commission
NOTICES
Meetings:
Reactor Safeguards Advisory Committee, 24954
Meetings; Sunshine Act, 24967
Petitions; Director's decisions:
Arizona Public Service Co. et al., 24954
Applications, hearings, determinations, etc.:
Virginia Electric & Power Co., 24954

Office of Management and Budget
See Management and Budget Office

Pacific Northwest Electric Power and Conservation Planning Council
NOTICES
Meetings; Sunshine Act, 24966

Public Health Service
See Food and Drug Administration; Health Resources and Services Administration

Research and Special Programs Administration
NOTICES
Hazardous materials:
Applications; exemptions, renewals, etc., 24964 (2 documents)

Securities and Exchange Commission
NOTICES
Self-regulatory organizations; proposed rule changes:
National Association of Securities Dealers, Inc., 24960
Applications, hearings, determinations, etc.:
Barclays PLC, 24955
Berliner Handels-Und Frankfurter Bank et al., 24957
Prudential Series Fund, Inc., et al., 24959
Western Union Telegraph Co., 24963

Textile Agreements Implementation Committee
See Committee for the Implementation of Textile Agreements

Transportation Department
See also Federal Aviation Administration; Federal Highway Administration; National Highway Traffic Safety Administration; Research and Special Programs Administration
NOTICES
Aviation proceedings:
Hearings, etc.—
U.S.-Japan small package service proceeding, 24963
Wise Aviation Co., 24963

Treasury Department
See Customs Service

Separate Parts In This Issue

Part II
Department of Defense; General Services Administration; National Aeronautics and Space Administration, 24971

Part III
Environmental Protection Agency, 24974

Part IV
Environmental Protection Agency, 25004

Part V
Department of Health and Human Services, Food and Drug Administration, 25012

Reader Aids
Additional information, including a list of public laws, telephone numbers, and finding aids, appears in the Reader Aids section at the end of this issue.

CFR PARTS AFFECTED IN THIS ISSUE

A cumulative list of the parts affected this month can be found in the Reader Aids section at the end of this issue.

5 CFR
1701 24799
1702 24799
1703 24799
1720 24799

7 CFR
2 24806
917 24807
981 (2 documents) 24808, 24809

10 CFR
300 24810

14 CFR
39 (2 documents) 24811, 24812
71 24813

Proposed Rules:
39 24844
43 24845
91 (2 documents) 24845, 24851
121 24845
127 24845
135 24845

17 CFR

Proposed Rules:
30 24852

19 CFR
134 24814

21 CFR
73 24815
101 25012
182 25012

24 CFR

Proposed Rules:
115 24852

29 CFR
1450 24816

40 CFR
81 24825
405 24974
406 24974
407 24974
408 24974
409 24974
411 24974
412 24974
418 24974
422 24974
424 24974
426 24974
432 24974

Proposed Rules:
52 24853
81 (2 documents) 24854, 24855
260 24856
261 24856
262 24856
264 24856
265 24856
268 24856
270 24856
271 24856

42 CFR

Proposed Rules:
405 24857
420 24857
455 24857
474 24857

45 CFR
1600 24826
1631 24826

47 CFR
73 24827

Proposed Rules:
18 24872
73 (14 documents) 24872–24877

48 CFR

Proposed Rules:
30 24971

49 CFR

Proposed Rules:
571 24877

50 CFR
215 24828
650 24841
661 24842

Proposed Rules:
655 24880

Rules and Regulations

Federal Register
Vol. 51, No. 131
Wednesday, July 9, 1986

This section of the FEDERAL REGISTER contains regulatory documents having general applicability and legal effect, most of which are keyed to and codified in the Code of Federal Regulations, which is published under 50 titles pursuant to 44 U.S.C. 1510.
The Code of Federal Regulations is sold by the Superintendent of Documents. Prices of new books are listed in the first FEDERAL REGISTER issue of each week.

ADVISORY COMMISSION ON INTERGOVERNMENTAL RELATIONS

5 CFR Parts 1701, 1702, 1703, and 1720

Organization and Bylaws

AGENCY: Advisory Commission on Intergovernmental Relations.

ACTION: Final rule.

SUMMARY: The Advisory Commission on Intergovernmental Relations is issuing herewith its regulations describing its organization and specifying in detail the process of formulating its legislative recommendations (Part 1701). The rules governing its membership and employees are contained in its Bylaws (Part 1702), except that rules governing employee responsibilities and conduct have been left in Part 1700 in order to retain the double zero Part number (Part —00) used by many Federal agencies for this subject matter. The Advisory Commission does not issue rules of general applicability and legal effect governing the public or prescribing a penalty. The documents it does issue are recommendations for legislative changes to the Congress, the States, the counties and the cities of this country. Its recommendations carry no sanction and may be adopted or not as the agency or agencies receiving the recommendations may choose. In addition to its legislative recommendations the ACIR does research on intergovernmental matters of current interest, and issues reports on its research. Members of its staff as well as the Commission members frequently appear before Congressional committees, State legislative committees and other bodies where intergovernmental matters are involved. More generally the Commission seeks to provide a forum for discussion of intergovernmental topics where experts in the field such as professors, consultants, economists, elected and appointed officials, and others interested in our federal system can meet and talk about any significant development affecting the relationship between governmental entities.

EFFECTIVE DATE: August 8, 1986.

FOR FURTHER INFORMATION CONTACT: Franklin A. Steinko, Jr., Budget and Management Officer, Advisory Commission on Intergovernmental Relations, Suite 2000, Vanguard Building, 1111 20th Street, NW, Washington, DC 20575, (202) 653–5640.

SUPPLEMENTARY INFORMATION: These rules have been compiled from the bylaws of the Commission and its manual of operating procedures adopted in September of 1985. These documents in turn incorporate procedures developed and modified over a number of years and tested in meetings with public interest groups and others. Since the Commission has no authority to issue substantive rules of general applicability there can be no statements of general policy affecting issuance of such rules, nor is there any power to issue interpretation of general applicability. They thus cannot be "significant regulations" under the requirements of E.O. 12044. While its legislative recommendations may serve to shape the course of intergovernmental relations, they do so only through their recommendatory force, and can be implemented only after they have been sponsored by a member of the legislature and subjected to the usual procedures for formulating any piece of legislation. Actual notice of the Commission's activities is almost guaranteed to all those having an interest in its proceedings (other than those having only a secondary interest) by reason of the required representation on the Commission of three Senators, three Members of the House of Representatives, four Governors nominated by the Governors' Conference, three members of State legislative bodies nominated by the Council of State Governments, four mayors from a list jointly submitted by the National League of Cities and the United States Conference of Mayors, three elected county officials named by the National Association of Counties plus three members of the Executive Branch appointed by the President, who also appoints three members of the general public. The Commission was intended by the Congress to be "a political innovation—a new type of organization designed especially to cope with the changing problems encountered in our Federal form of government." House Report No. 742, U.S. Code, Congressional and Administrative News, 86th Congress, First Session, 1959, page 2910. Report 742 further states "Thus, the Commission would benefit from both the firsthand knowledge of its members of the problems under consideration and their ability to communicate the findings and recommendations to their respective levels of government." Ibid. p. 2899. Consistent with the advisory, expert makeup of the Commission where rulemaking participation by the general public was not envisaged is the fact that the "Government in the Sunshine Act" (Pub. L. 94–409, 5 U.S.C. 552(b)) excludes bodies of the Commission's composition. Although it is a "collegial body", and takes action by majority vote, the majority of its members are not "appointed by the President with the advice and consent of the Senate," but by the President from lists submitted by organizations made up of public interest groups.

However, notwithstanding its unique character, the Commission undoubtedly is an "agency" within the meaning of the Administrative Procedure Act (5 U.S.C. 551–553) so far as public information is concerned, and both the Freedom of Information Act (5 U.S.C. 552(a)) and the Privacy Act of 1974 (Pub. L. 93–579; 5 U.S.C. 552a) require publication in the Code of Federal Regulations of the Commission's regulations on the subject matter.

The Commission finds that notice of proposed rulemaking of this document is unnecessary for the reason that no substantive rule of general applicability or interpretations of general applicability are intended to be adopted or within the authority of the agency to adopt; and that what is here published are rules of agency organization, procedure and practice; some general statements of policy, and other rules related solely to internal agency personnel practices. These regulations

may therefore be made without notice and effective immediately.

Environmental Impact Statement

This regulation does not significantly affect the environment. An environmental impact statement is not required under the Environmental Policy Act of 1969.

Title 5, Chapter VII of the Code of Federal Regulations is amended as set forth below:

PART 1701—REDESIGNATED AS PART 1720

1. Title 5 CFR, Chapter VII is amended by redesignating Part 1701 as Part 1720 of the Code of Federal Regulations, with the change in section numbers indicated below:

REDESIGNATION TABLE

Old Section		New Section
1701.101	Purpose	1720.101
1701.102	Application	1720.102
1701.103	Definition	1720.103
1701.104-1701.109	Reserved	1720.104-1720.109
1701.110	Self-Evaluation	1720.110
1701.111	Notice	1720.111
1701.112-1701.129	Reserved	1720.112-1720.129
1701.130	General prohibition against discrimination.	1720.130
1701.131-1701.139	[Reserved]	1720.131-1720.139
1701.140	Employment	1720.140
1701.141-1701.148	[Reserved]	1720.141-1720.148
1701.149	Program accessibility: Discrimination Prohibited.	1720.149
1701.150	Program accessibility: Existing Facilities.	1720.150
1701.151	Program accessibility: New Construction and Alteration.	1720.151
1701.152-1701.159	[Reserved]	1720.152-1720.159
1701.160	Communications	1720.160
1701.161-1701.169	[Reserved]	1720.161-1720.169
1701.170	Compliance Procedures	1720.170
1701.171-1701.999	[Reserved]	1720.171-1720.999

2. Title 5, Chapter VII is further amended by adding new Parts 1701, 1702 and 1703 to read as follows:

PART 1701—ORGANIZATION AND PURPOSE

Sec.
1701.1 Establishment and location.
1701.2 Name.
1701.3 Purpose.
1701.4 Membership of the Commission.
1701.5 Bipartisan nature of Commission.
1701.6 Organization of Commission—vacancies, quorum.
1701.7 Commission personnel.
1701.8 Activities of the Commission.
1701.9 Step-by-step development of Commission recommendations.
1701.10 Other activities of the Commission.

Authority: Pub. L. 86-380 of Sept. 24, 1959, 73 Stat 703 (42 U.S.C. 4271).

§ 1701.1 Establishment and locations.

The Advisory Commission on Intergovernmental Relations was established as a permanent independent and bipartisan agency of the Federal Government by Pub. L. 86-380; 73 STAT 703 (43 U.S.C. 4272), enacted in 1959. The Commission's offices are located at 1111 20th Street, NW., Washington, DC 20575.

§ 1701.2 Name.

The formal name of the agency is "Advisory Commission on Intergovernmental Relations." It is also known, and sometimes referred to, as the "Commission," or simply "ACIR."

§ 1701.3 Purpose.

The underlying purpose of the Commission is to strengthen the ability of the United States federal system of government to meet the problems of an increasingly complex society by promoting greater cooperation, understanding and coordination of activities between the separate levels of government. More specifically the purpose of the Commission includes the objectives of:

(a) Bringing together representatives of the Federal, State, and local governments for the consideration of common problem;

(b) Providing a forum for discussing the administration and coordination of Federal grant and other programs requiring intergovernmental cooperation;

(c) Giving critical attention to the conditions and controls involved in the administration of Federal grant programs;

(d) Making available technical assistance to the executive and legislative branches of the Federal Government in the review of proposed legislation to determine its overall effect on the Federal system;

(e) Encouraging discussion and study at an early stage of emerging public problems that are likely to require intergovernmental cooperation;

(f) Recommending within the framework of the Constitution, the most desirable allocation of governmental functions, responsibilities, and revenues amount the several levels of government; and

(g) Recommending methods of coordinating and simplifying tax laws and administrative practices to achieve a more orderly and less competitive fiscal relationship between the levels of government and to reduce the burden of compliance for taxpayers.

§ 1701.4 Membership of the Commission.

The Commission is composed of twenty-six members, as follows:

(a) Six appointed by the President of the United States, three of whom are officers of the executive branch of the Government, and three private citizens, all of whom have had experience of familiarity with relations between the levels of government;

(b) Three appointed by the President of the Senate, who are Members of the Senate;

(c) Three appointed by the Speaker of the House of Representatives, who are Members of the House;

(d) Four appointed by the President from a panel of at least eight Governors submitted by the Governors' Conference;

(e) Three appointed by the President from panel of at least six members of State legislative bodies submitted by the board of managers of the Council of State Governments;

(f) Four appointed by the President from a panel of at least eight mayors submitted jointly by the American Municipal Association and the United States Conference of Mayors;

(g) Three appointed by the President from a panel of at least six elected county officers submitted by the National Association of County Officials.

§ 1701.5 Bipartisan nature of Commission.

The members appointed from private life under paragraph (a) of § 1701.4 are appointed without regard to political affiliation; of each class of members enumerated in paragraphs (b) and (c) of § 1701.4, two are from the majority party of the respective houses; of each class of members enumerated in paragraphs (d), (e), (f) and (g) of § 1701.4, not more than two may be from any one political party; of each class of members enumerated in paragraphs (e), (f) and (g) of § 1701.4, not more than one from any one State; at least two of the appointees under paragraph (f) are from cities under five

hundred thousand population. The term of office of each member of the Commission is two years, but members are eligible for reappointment.

§ 1701.6 Organization of Commission, vacancies, quorum.

(a) The President designates a Chairman and a Vice Chairman from among members of the Commission.

(b) Any vacancy in the membership of the Commission is filled in the same manner in which the original appointment was made; except that where the number of vacancies is fewer than the number of members specified in paragraphs (d), (e), (f) and (g) of § 1701.4, each panel of names submitted in accordance with the aforementioned paragraphs contains at least two names for each vacancy.

(c) Where any member ceases to serve in the official position from which he or she was originally appointed under section 1701.4, that place on the Commission is deemed to be vacant.

(d) Thirteen members of the Commission constitute a quorum, but two or more members constitute a quorum for the purpose of conducting hearings.

§ 1701.7 Commission personnel.

(a) *Executive Director.* Is appointed by the Commission itself. He is appointed without regard to the Civil Service laws or Classification Act of 1949, and without regard to political affiliation. He is appointed solely on the basis of fitness to perform the duties of the position.

(b) *Other employees.* Subject to the provisions of Part 1720 of this Chapter and of such other rules and regulations as the Commission may adopt, the Chairman, without reference to the Civil Service laws and the Classification Act of 1949, and without regard to political affiliation, may appoint, fix the compensation of, and remove such other personnel as he deems necessary.

(c) *Temporary employees.* The Chairman may also procure temporary and intermittent services to the same extent as is authorized by section 15 of the Administrative Expenses Act of 1946 (5 U.S.C. 55a), but at rates not to exceed the daily rate for a GS-18.

§ 1701.8 Activities of the Commission.

The primary role of the Commission is to give advice. It issues no rules or regulations governing the general public, and the advice it gives is addressed to various levels of the American government, such as the Congress of the United States, and the States, counties, and cities. The advice it gives is contained in its recommendations and reports, and these in turn are based on research conducted by the Commission and its staff.

(a) *Selection of research topics—policy applied.* The policy applied by the Commission in the choice of research topics is to select ones which will strengthen the federal system, and promote the power balance and fiscal balance among the various levels of government. Weight is given to new ways of dealing with practical intergovernmental problems. Routine and continual re-evaluation of the same topic will be avoided whenever possible.

(b) *Selection of research topics—criteria.* The Commission, by vote of its members, selects all research projects and approves acceptance of all research grants. Its selections take into account the following general criteria:

(1) Importance of the subject area,

(2) Timeliness of the issues,

(3) Utility to the governmental levels,

(4) Compatability with the competence of the staff, and

(5) Appropriateness for the Commission's composition and procedures.

(c) *Outside requests for research.* The Commission undertakes research requested by the Congress and by executive agencies to the extent that its work program and resources allow. However, where such requests do not meet the Commission's research selection criteria or where undertaking the work would impede other important work in progress, the Commission will necessarily seek additional funding to expend its work capacity temporarily. The Commission does not make research grants to other outside parties on topics those parties have selected for study nor will it request appropriation for such studies.

(d) *Special funding of projects.* ACIR will seek and accept grants for work on intergovernmental subjects that accord with the Commission's finding that the subject is of prime intergovernmental importance, if it is within the capacity of the staff—or outside scholars and consultants engaged for this purpose—to produce a study that meets the Commission's usual standards of quality.

§ 1701.9 Step-by-step development of Commission recommendations.

The Commission itself selects the research projects to be undertaken and assigns the priority to be given among projects. In making its selection the Commission may consider exploratory research by the ACIR staff, the Commission members expertise, and any other information the Commission members have. Thereafter:

(a) *Working outline.* An outline of the project is prepared by the one or more staff members assigned to it by the Executive Director. In addition, the Chairman in his or her discretion, may assign one or more Commission members to monitor the staff work. The working outline covers the issues to be dealt with and the research techniques to be used. This outline is sent to the Commission members and reviewed at a "Thinkers" Session.

(b) *Thinkers session.* The participants at a Thinkers Session are selected by the staff, after seeking suggestions from Commission members. Participants are usually professors, researchers, and other experts who have a special knowledge and interest in the subject matter of the project. If Commission members have been assigned to oversee the work, every effort will be made to enable them to attend. Thinkers Sessions are held at times convenient to the participants and are usually held at the ACIR headquarters in Washington, but may be held elsewhere if necessary for the convenience of the participants.

(c) *Preliminary draft.* Following the Thinkers Session, the working outline will be appropriately revised and the staff will conduct the research work and prepare a preliminary draft of the study that may include a range of possible legislative recommendations for Commission consideration.

(d) *Critics session.* After being reviewed internally, the preliminary draft is subjected to review and criticism by an informal group of critics, some of whom may have been members of the thinkers group. The critics also provide expert knowledge and a diversity of substantive and philosophical viewpoints. Care is taken to include among the critics representatives of national associations of state and local officials, as well as of Congress and federal departments and agencies. If Commission members have been assigned to oversee the work, every effort is made to encourage them to attend any meeting of the critics. Participants in a critics session are selected by the staff after seeking suggestions from Commission members. Responses to the criticisms and suggestions presented at a critics meeting are determined by the staff.

(e) *Revision and submission to Commission.* The draft report is then revised by the staff in light of criticisms and comments received both orally and in writing from critics, Commission members and others. A summary of the draft report, along with potential

recommendations, is included in a "Docket Book" and transmitted to Commission members at least three weeks in advance of the meeting at which it is to be considered. To the maximum extent feasible, copies of the entire report are made available to all interested parties at least two weeks before the full Commission considers the study.

(f) *Advisory committee.* In exceptional projects the Executive Director, or the Commission, may appoint a committee of advisors to help guide the research. The committee will consist of academics and practitioners who have special competence and interest in the subject under study and, particularly, who are familiar with the latest developments in the field. The committee advises the staff and the Commission on all phases of the research, from initiating the research design to developing proposed recommendations. The committee's activities supplement but do not replace thinkers and critics sessions.

(g) *Adoption of recommendations.* The draft recommendations are then considered and separately voted upon by the Commission in meeting. Majority vote of those present is required for approval. Extensive amendments and new germane matter must be set forth in writing and be made available to each member attending the meeting before they can be voted upon. New matter determined to be non-germane by the Chairman is referred to the staff with instructions on how to deal with the material.

(h) *Dissent.* Members are free to dissent from actions adopted by the Commission and may have that dissent registered in any of several ways. If requested, the names of dissenting members will be shown in the minutes of the meeting where the vote was taken. To the extent dissenting members feel the minutes fail to reflect adequately the nature of their dissent, they may, with Commission approval, have the minutes revised to present their viewpoint more fully. If a report is involved, the member may be listed as having dissented on a point at an appropriate location in the text of the report. In addition, if the member wishes, a statement of dissent may be included in the report at some appropriate place. On request, the staff will assist members in drafting explanatory dissent statements for inclusion in either the minutes or reports.

(i) *Informal action by the Commission—polling.* The Chairman, on his own motion, may poll the membership of the Commission to determine the views of members on matters on the agenda of a regular or special meeting of the Commission but which were not considered by the Commission. Votes so obtained may either be by mail or by telephone, but if by telephone, they must be confirmed in writing. The result of any poll is reported in the Docket Book for the next session of the Commission for ratification. At that time it is subject to a motion to reconsider, but not at any later time.

§ 1701.10 Other activities of the Commission.

(a) The Commission devotes the necessary amount of ACIR staff time to technical assistance, publications, and education activities so as to disseminate Commission reports and encourage study of emerging public problems which may require adoption of Commission legislative recommendations. In carrying out these implementation activities, Commission members and the staff conduct and participate in press conferences, briefings for legislative and policy officials, legislative hearings, seminars and workshops, technical assistance visits to specific jurisdictions, and other activities appropriate to its statutory mandate.

(b) *Support activities.* In support of its implementation activities, the Chairman and members of the Commission complement the staff work by participating in press conferences and briefings for legislative and policy officials, testifying before Congressional committees and state and local legislative bodies, participating in their home states in press and legislative activities to generate interest in ACIR reports and recommendations and to advance their implementation, making speeches as representatives of the Commission, serving as a two-way communications channel with the ACIR staff, and undertaking such other assignments on behalf of the Commission as may be appropriate.

(c) *Publications.* ACIR reports containing legislative recommendations or Commission "findings" or "conclusions" ("A" series) and major research reports not containing legislative recommendations ("M" series) are published only after approval by the Commission. Other reports and publications may be published with the approval of the Executive Director as follows:

Public Opinion Survey ("S" series)
Intergovernmental Perspective
In Brief ("B" series)
"What is ACIR"' Brochure
Publications List
Staff Working Papers
Information Bulletins

(d) *Hearings.* Whenever in the opinion of the Commission it is necessary or desirable to have a factual determination based on the testimony of sworn witnesses in an adjudicatory-type hearing, or to provide a forum for receiving statements from interested persons or members of the public, or a part thereof, in a legislative-type hearing, the Commission, or a sub-committee of the Commission (when authorized by the Commission) or any number of members thereof (not less than two) may hold a public hearing. Factors weighed when determining whether or not to hold a hearing include, but are not limited to:

(1) The extent to which all directly affected interests were represented in the critics session.

(2) Whether directly affected interests have requested a hearing with the Commission.

(3) The extent to which a report contains findings, conclusions or potential recommendations on which identifiable interests are in sharp disagreement.

(4) The extent to which hearings may be a good device for directing public attention to the Commission, the report, or both.

(5) Whether in meetings away from Washington a hearing will be a good device for calling attention to the Commission's presence in a particular community or region.

PART 1702—BYLAWS OF THE COMMISSION

Sec.
1702.1 Establishment.
1702.2 Members.
1702.3 Officers.
1702.4 Responsibilities and duties of the Commission and Commission members.
1702.5 Duties and powers of the Chairman and Vice-Chairman.
1702.6 Commission meetings.
1702.7 Staff—powers and limitations.
1702.8–1702.10 [Reserved]

Authority: Pub. L. 86–380 of Sept. 24, 1959; 73 Stat. 703 (42 U.S.C. 4271).

§ 1702.1 Establishment.

The Act establishing the Advisory Commission on Intergovernmental Relations, 42 U.S.C. 4271 *et seq.* (1959), 73 Stat. 703, empowers the Commission to regulate to the extent it deems desirable for the purpose of carrying out the provisions of this Act the holding of hearings, taking of testimony and fixing the time and place of meetings (42 U.S.C. 4276(a)), rules covering the appointment and compensation of employees and the procurement of temporary and

intermittent services (42 U.S.C. 4276(d)). In addition, the Commission is required to publish regulations implementing the provisions of the Freedom of Information Act (5 U.S.C. 552(a)), and the Privacy Act of 1974 (Pub. L. 93-579, 5 U.S.C. 552a). These bylaws are designed to carry out these regulatory obligations.

§ 1702.2 Members.

Public Law 86-380, Sec. 3 (42 U.S.C. 4273), provides that the Commission consist of 26 members serving two-year terms—three U.S. Senators appointed by the President of the Senate, three members of the U.S. House of Representatives appointed by the Speaker of the House, three private citizens and three officers of the Executive Branch appointed by the President of the United States, and fourteen elected officials of state and local governments nominated by their respective national associations and appointed by the President of the United States. Except for the private citizen and Executive Branch members, appointments must have bipartisan balance within each membership group. The state and local officials on the Commission are divided into the following groups: four governors, three state legislators, four mayors and three elected county officials. Members serve until their terms expire and their replacements have been appointed, or until they leave public office in the membership category they represent. Members are eligible for reappointment.

§ 1702.3 Officers.

In accordance with section 4(b) of Pub. L. 86-380 (42 U.S.C. 4274(b)), the President designates the Chairman and Vice-Chairman from among the members of the Commission.

§ 1702.4 Responsibilities and duties of the Commission and Commission members.

(a) *Studies, recommendations and reports.* In accordance with section 5 of Pub. L. 86-380 (42 U.S.C. 4275), the Commission is responsible for choosing topics to study and consider, for recommending "ways and means for fostering better relations between the levels of government," and for submitting reports to the President, Congress and any other unit of government or organization, including an annual report to the President and Congress. The Commission, or the Chairman upon explicit delegation by the Commission, must approve publication of each formal report containing legislative recommendations (series "A" reports) and information reports (series "M" reports).

(b) *Meeting and hearings.* The Commission, by majority vote of those attending the meeting, may call meetings and hearings at such times and places as it deems appropriate.

(c) *Executive Director.* In accordance with section 6(c) of Pub. L. 86-380 (42 U.S.C. 4276(c)), as amended, the Commission appoints at a regular or special meeting, compensates and removes the Executive Director.

(d) *Committees.* The Commission may establish such committees as it deems necessary or desirable to guide research, to hold hearings, or to perform other duties.

(e) *Responsibilities and duties of Commission members.* Members are expected to:

(1) Attend all meetings.

(2) Be familiar with docket book contents.

(3) Be prepared to discuss and vote on proposed recommendations.

(4) Attend ACIR public hearings and suggest witnesses.

(5) Make speeches and appearances on behalf of ACIR.

(6) Testify for ACIR at Congressional hearings.

(7) Upon request of the Chairman, serve on Commission committees.

Any member authorized by the Commission may administer oaths or affirmations to witnesses appearing before the Commission or any committee or members thereof (section 6(a), Pub. L. 86-380 (42 U.S.C. 4276(a)).

§ 1702.5 Duties and powers of the Chairman and Vice-Chairman.

(a) *Personnel.* Subject to rules and regulations adopted by the Commission, the Chairman is empowered by section 6(d) of Pub. L. 86-380 (42 U.S.C. 4276(d)) to appoint, fix the compensation of, and remove all personnel other than the Executive Director, without regard to civil service laws or political affiliation; and to procure the services of temporary and intermittent employees.

(b) *Information requests.* The Chairman is empowered to request necessary information of federal departments and agencies to be furnished by them as required by Pub. L. 86-380, 42 U.S.C. 4276(b). The Vice-Chairman also is empowered to request such information.

(c) *Presiding and voting.* The Chairman shall preside at all meetings of the Commission. In the absence of the Chairman, the Vice-Chairman shall preside at Commission meetings. In the absence of both the Chairman and Vice-Chairman, the Commission member who will preside shall have been designated by the Chairman or failing such designation, by majority vote of those attending. The Chairman votes only in the case of a tie or when a vote is taken by written ballot.

(d) *Committees.* The Chairman may establish committees as necessary.

(e) *Hearings.* The Chairman may call hearings and fix their time and place.

(f) *Encouraging attendance and reducing absenteeism.* The Chairman shall promote regular attendance by Commission members at regular Commission meetings and other Commission functions. Whenever a member misses three or more consecutive regular Commission meetings, the Chairman shall write the member, on behalf of the Commission, requesting the member's resignation. The Chairman shall send a copy of his letter to the officials responsible under the law for nominating and appointing that member to the Commission, noting his record of absenteeism and suggesting that efforts be made to vacate the seat so that a new member may be nominated. Every effort will be made to make attendance expectations known to all new members and to officials making nominations and appointments.

§ 1702.6 Commission meetings.

(a) *Time and place.* The Commission intends in the exercise of its discretion provided by Pub. L. 86-380, section 6(a) (42 U.S.C. 4276(a)), to meet quarterly at the call of the Chairman, except in even numbered election years when the fall quarter meeting may be cancelled. Additional meetings may be called by the Chairman or by a majority of all the Commission members. Commission meetings shall be held, upon due notice, at such times and places as the Chairman or the Commission shall determine. The Commission also intends, in the exercise of its discretion, that at least one of its meetings each year be held outside Washington, D.C.

(b) *Setting meeting agendas—notice.* With the approval of the Chairman, the Executive Director will establish the agenda for each regular meeting and shall notify the members of its contents by sending out a docket book at least three weeks in advance of the meeting. Members wishing items placed on the agenda may request the Chairman to do so. By vote of a majority of the members at the meeting, the agenda may be revised.

(c) *Adoption of Robert's Rules of Order.* The rules contained in *Robert's Rules of Order Revised,* 1971, shall govern the Commission in all cases to which they are applicable to the extent they are not inconsistent with these bylaws.

(d) *Quorum.* "Thirteen members of the Commission shall constitute a quorum for the transaction of business, but two or more members shall constitute a quorum for the purpose of conducting hearings." [Pub. L. 86-380 section 4(3); 42 U.S.C. 427(e).]

(e) *Substitute for Federal executive members.*[1] Federal executive members may designate one permanent substitute of at least Assistant Secretary rank or equivalent to act fully in his or her stead as a member of the Commission. Accordingly, such substitutes for Federal Executive members may participate in Commission debates and vote on all matters. Such named substitute designations by Federal Executive members shall be for the term of the member.

(f) *Polling.* The Chairman, on his own motion, may poll the membership to determine the views of the members on matters on the agenda of a regular or special meeting of the Commission but which were not considered by the Commission, or where he wishes to increase the number of members voting, or where he determines there is some administrative purpose to be served. Such voting shall either be by mail or, if by telephone, shall be confirmed in writing. The result of any poll shall be reported in the Docket Book for the following meeting of the Commission and shall be subject to a motion to reconsider at the following meeting but not at any other later time.

(g) *Acceptance of outside financial assistance.* No outside financial assistance is accepted without approval by the Commission. The Chairman, in his discretion, may request such approval by placing it in the Commission's regular agenda or by polling the members in accordance with Article VI of the Bylaws.

§ 1702.7 Staff—powers and limitations.

(a) *Duties and powers of the Executive Director.* The Executive Director directs and manages the staff in carrying out the directions of the Commission and the Chairman; represents the Commission before a variety of audiences including the Congress and its committees, the Executive Office of the President and other federal agencies, national and state associations of state and local officials, state and local governments, the media, schools and universities, and the general public; and undertakes and directs such other activities as the Executive Director and the Chairman of the Commission deem in the best interest of improved intergovernmental relations throughout the nation.

(b) *Commission's role in drafting legislative materials.* Any proposed legislation drafted by the staff to carry out Commission recommendations is to be approved by the Commission at a regularly scheduled Commission meeting before that material is transmitted to Congress, to state legislatures, to other interested groups, or to any other source.

§§ 1702.8-1702.10 [Reserved]

PART 1703—PUBLIC AVAILABILITY OF DOCUMENTS AND RECORDS

Subpart A—Freedom of Information Act Implementation

Sec.
1703.1 General.
1703.2 Publications.
1703.3 Requests for records.
1703.4 Index.
1703.5 Policy with respect to requests for particular kinds of documents.
1703.6 Schedules of fees.

Subpart B—Privacy Act Implementation

1703.20 Purpose and scope.
1703.21 Defintions.
1703.22 Procedures for requests pertaining to individual records in a system of records.
1703.23 Request for amendment or correction of a record.
1703.24 Disclosure of a record to a person other than the individual to whom it pertains.
1703.25 Schedule of fees.

Authority: 5 U.S.C. 552, 552a, and 571-576.

Subpart A—Freedom of Information Act Implementation

§ 1703.1 General.

This part implements section 552 of Title 5, United States Code, and prescribes rules governing the availability to the public of documents and records of the Advisory Commission on Intergovernmental Relations.

§ 1703.2 Publications.

(a) Complete lists of Legislative Recommendations and Reports, together with the texts of those Recommendations, Reports and other publications are maintained in the Offices of the Commission.

(b) The Annual Report of the Commission contains a list of all Legislative Recommendations and Commission Reports adopted during the preceding year. It also contains descriptive material regarding the work of the Commission. The Annual Report is available from ACIR. Single copies of current and past Annual Reports will also be furnished by the Commission on request, to the extent that supplies on hand permit.

(c) The Commission endeavors to maintain for distribution to interested persons an adequate stock of reports, copies of congressional testimony, newsletters, minutes of recent committee meetings, and other documents of general interest. Requests for single copies of such documents will be filled at cost to the extent that supplies on hand permit.

§ 1703.3 Requests for records.

(a) It is the policy of the Commission to make records and documents in its possession available to the public to the greatest extent possible. All records of the Commission are available for public inspection and copying in accordance with this section except those records or portions of records as to which the Director or his designee specifically determines that:

(1) They fall within a particular exemption in section 552(b) of the Freedom of Information Act and

(2) Disclosure would not be consistent with the national interest, the protection of private rights or the efficient conduct of Commission business.

(b) A request for records, other than for documents which are published in the **Federal Register** or available for sale or distribution as described in § 1703.2, shall be made in writing and directed to the Executive Director, Advisory Commission on Intergovernmental Relations, 1111 20th Street, NW., Washington, DC 20575. Such request shall be clearly marked "Freedom of Information Request" or "Information Request" and shall reasonably describe the record requested. The staff of the Commission will make reasonable efforts to assist a requester in formulating his request. Nothing in this section shall preclude staff of the ACIR from complying with oral, unmarked, or generally stated requests for information and documents.

(c) The Executive Director or his designee shall, within ten working days after its receipt, either comply with or deny a request for records, provided

[1] In amending and reaffirming this provision for alternate members from the Executive Branch, the Commission emphasized its desire that members of the President's Cabinet be appointed to the Commission and attend its meetings whenever possible. The Commission also stressed that an alternate substituting for an Executive Branch member should be the same person from one meeting to the next and should represent the views of the regular member with continuity. Although the Commission recognized that it might be necessary to change the designation of an alternate, the Commission urged that such changes be kep to a minimum in the interest of strengthening continuity within the Commission.

that when additional time is required because of:

(1) A need to search for, collect and examine a voluminous amount of separate and distinct records demanded in a single request, or (2) a need for consultation with another agency having a substantial interest in the determination of the request, the time limit for disposing of the request may be extended for up to ten additional working days by a written notice to the requester setting forth the reasons for and the anticipated length of the delay.

(d) (1) Where it appears to the Executive Director or his designee that fees chargeable under § 1703.6 of this regulation for compliance with the request will exceed $25, and the requester has not indicated in advance his willingness to pay fees as high as are anticipated, the requester shall be promptly notified of the amount of the anticipated fee or such portion thereof as can readily be estimated. In such cases, a request will not be deemed to have been received until the requester is notified of the anticipated cost and agrees to bear it. The notification shall offer the requester the opportunity to confer with Commission personnel with the object of reformulating the request so as to meet his needs at lower cost.

(2) Where the anticipated fee chargeable under this part exceeds $50, an advance deposit of 25% of the anticipated fee or $25, whichever is greater, may be required. Where a requester has previously failed to pay a fee under this part, an advance deposit of the full amount of the anticipated fee may be required.

(e) The requester will be notified promptly of the determination made pursuant to paragraph (c) of this section. If the determination is to release the requested record, such record shall promptly be made available. If the determination is not to release the record, the person making the request shall, at the same time he is notified of such determination, be notified of:

(1) The reason for the determination;

(2) The name and title or position of each person responsible for the denial of the request; and

(3) His right to seek judicial review of such determination pursuant to the provisions of the Freedom of Information Act, 5 U.S.C. 552(a)(4).

§ 1703.4 Index.

The Freedom of Information Act, 5 U.S.C. 552(a)(2), requires each agency to maintain and make available for public inspection and copying a current index of certain materials issued, adopted or promulgated by the agency. With respect to the materials covered by section 552(l)(2)(B), the Commission maintains currently for distribution a complete list of Commission Recommendations ("A" Series) and Reports ("M" Series), and other reports. The Commission has no adjudicatory responsibilities of the kind contemplated by section 552(a)(2)(A) of the Act and does not ordinarily issue materials of the type described in section 552(a)(2)(C). Should such materials be issued, appropriate indexes will be maintained.

§ 1703.5 Policy with respect to request for particular kinds of documents.

This section is intended to amplify the policy set out in § 1703.3(a) as applied to specific categories of documents:

(a) All materials which are distributed to the membership of the Commission (Docket Book) for consideration at a plenary session will upon distribution be available to the public in accordance with § 1703.2(d) of these regulations.

(b) Consultant and staff reports which are otherwise exempt from disclosure under the Freedom of Information Act as interagency or intra-agency correspondence will, absent special circumstances, be made available if the reports are in substantially completed form and have been distributed widely for comment within or outside the Government. Tentative reports and working drafts which have received only limited circulation will ordinarily not be made available.

(c) Agency comments on a report or proposed legislative recommendation, even if exempt from disclosure under the Freedom of Information Act, will nevertheless ordinarily be made available unless the agency indicates to the Commission that its comment is confidential. Comment of an individual Commission member, writing in his personal capacity, will not be made available without the consent of the member.

(d) The following categories of documents are declared to be available to the public, notwithstanding any applicable exemption in section 552(b) of the Freedom of Information Act:

(1) Agency reports on the implementation of Commission recommendations;

(2) Correspondence from the Office of the Chairman of the Commission or the Executive Director to committees of Congress, commenting on pending legislation;

(3) Minutes of meetings of the standing committees of the Commission.

(4) Transcripts or minutes of Commission meetings.

§ 1703.6 Schedules of fees.

The Executive Director may charge a fee for searching for and copying documents or records requested pursuant to § 1703.3, as follows:

(a) The fee for copies shall be $0.10 per copy per page. Copying fees of less than $3 per request are waived.

(b) The search charge shall be $9 per hour for the services of non-professional personnel and $15 per hour for the services of professional personnel. Search charges shall be calculated to the nearest quarter hour. There shall be no search charge for searches requiring less than one-half man hour.

(c) No fee will be charged in connection with any record which is not made available because it is found to be exempt from disclosure.

(d) Charges may be waived or reduced where the Executive Director determines that such waiver or reduction is in the public interest.

Subpart B—Privacy Act Implementation

§ 1703.20 Purpose and scope.

The purpose of this subpart is the implementation of the Privacy Act of 1974, 5 U.S.C. 552a, by establishing procedures whereby an individual can determine if a system of records maintained by the Commission contains a record pertaining to himself, and procedures for providing access to such a record for the purpose of review, amendment, or correction. Requests for assistance in interpreting or complying with these regulations should be addressed to the Executive Director, Advisory Commission on Intergovernmental Relations, 1111 20th Street, NW., Washington, DC 20575.

§ 1703.21 Definitions.

As used in this subpart, the terms "individual," "maintain," "record," "system of records," and "routine use" have the meaning specified in 5 U.S.C. 552a(a).

§ 1703.22 Procedures for requests pertaining to individual records in a system of records.

(a) An individual can determine if a particular system of records maintained by the Commission contains a record pertaining to himself by submitting a written request for such information to the Executive Director. The Executive Director or his designee will respond to a written request under this subpart within a reasonable time by stating that a record on the individual either is or is not contained in the system.

(b) If an individual seeks access to a record pertaining to himself in a system

of records, he shall submit a written request to the Executive Director. The Executive Director or his designee will, within ten working days after its receipt, acknowledge the request and if possible decide if it should be granted. In any event, a decision will be reached promptly and notification thereof provided to the individual seeking access. If the request is denied, the individual will be informed of the reasons therefor and his right to seek judicial review.

(c) In cases where an individual has been granted access to his records, the Executive Director may, prior to releasing such records, require the submission of a signed notarized statement verifying the identity of the individual to assure that such records are disclosed to the proper person. No verification of identify will be required when such records are available under the Freedom of Information Act, 5 U.S.C. 552, as amended.

§ 1703.23 Request for amendment of correction of a record.

(a) An individual may file a request with the Executive Director for amendment or correction of a record pertaining to himself in a system of records. Such written request shall state the nature of the information in the record the individual believes to be inaccurate or incomplete, the amendment or correction desired and the reasons therefor. The individual should supply whatever information or documentation he can in support of his request for amendment or correction of a record.

(b) The Executive Director or his designee will, within ten working days after its receipt, acknowledge a request for amendment or correction of a record. A decision will be reached promptly and notification thereof provided to the individual seeking to amend or correct a record. The Executive Director may request such additional information or documentation as he may deem necessary to arrive at a decision upon the request. If the request is granted, the record as amended will be called to the attention of all prior recipients of the individual's record.

(c) If the request is denied, the individual will be informed of the reasons therefor and his right to appeal the denial in writing to the Chairman of the Commission. The Chairman will render a decision on an appeal within thirty working days following the date on which the appeal is received. The individual will be notified promptly of the Chairman's decision and, if the appeal is denied, the reasons therefor and the individual's right to seek judicial review and his right to file a concise statement of disagreement, which statement will be noted in the records to which it pertains and supplied to all prior and subsequent recipients of the disputed record. If an appeal is granted, the record as amended will be called to the attention of all prior recipients of the individual's record.

(d) Requests for amendment or correction of a record must be accompanied by a signed notarized statement verifying the identity of the requesting party.

§ 1703.24 Disclosure of a record to a person other than the individual to whom it pertains.

Except in accordance with 5 U.S.C. 552a(b), or as required by the Freedom of Information Act, 5 U.S.C. 552, as amended, or other applicable statute, the Commission will not disclose a record to any individual other than the individual to whom the record pertains without the written consent of such individual. An accounting of the date, nature, and purpose of each disclosure of a record as well as the name and address of the person or agency to whom the disclosure was made will be maintained. This accounting will be made available to the individual to whom the record pertains upon the submission of a written, notarized request to the Executive Director.

§ 1703.25 Schedule of fees.

Copies of record supplied to any individual at his request shall be provided for $.10 per copy per page. Copying fees of less than $3 per request are waived.

John Shannon,

Executive Director.

[FR Doc. 86-15493 Filed 7-8-86; 8:45 am]

BILLING CODE 6115-01-M

DEPARTMENT OF AGRICULTURE

Office of the Secretary

7 CFR Part 2

Revision of Delegations of Authority

AGENCY: Department of Agriculture.

ACTION: Final rule.

SUMMARY: This document revises the delegations of authority from the Secretary of Agriculture and general officers of the Department to reflect the abolishment of the Office of Rural Development Policy and to clarify the authority of the Under Secretary for Small Community and Rural Development to make grants under section 306(a)(11) of the Consolidated Farm and Rural Development Act, as amended.

EFFECTIVE DATE: July 9, 1986.

FOR FURTHER INFORMATION CONTACT: Robert Siegler, Deputy Assistant General Counsel, Office of the General Counsel, United States Department of Agriculture, Washington, D.C. 20250, (202) 447-6035.

SUPPLEMENTARY INFORMATION: There were no appropriations to the Department of Agriculture for Fiscal Year 1986 to fund the activities of the Office of Rural Development Policy, accordingly, the Office was abolished. This document reflects that abolishment by deleting the delegations to the Director, Office of Rural Development Policy.

In addition, the delegations to the Under Secretary for Small Community and Rural Development currently authorize the Under Secretary to administer areawide rural development planning assistance to public bodies. It was not intended at the time the delegation was made to limit the delegation to the Under Secretary only to rural development planning assistance, or to limit such assistance only to public bodies. Accordingly, the delegations of authority to the Under Secretary are revised to include all the authority of the Secretary of Agriculture contained in section 306(a)(11) of the Consolidated Farm and Rural Development Act, as amended, 7 U.S.C. 1926(a)(11).

This rule relates to internal agency management. Therefore, pursuant to 5 U.S.C. 553, notice of proposed rule making and opportunity for comment are not required, and this rule may be made effective less than 30 days after publication in the **Federal Register**. Further, since this rule relates to internal agency management, it is exempt from the provisions of Executive Order No. 12291. Finally, this action is not a rule as defined by Pub. L. No. 96-354, the Regulatory Flexibility Act and thus is exempt from the provisions of that Act.

List of Subjects in 7 CFR Part 2

Authority delegations (Government agencies).

PART 2—DELEGATIONS OF AUTHORITY BY THE SECRETARY OF AGRICULTURE AND GENERAL OFFICERS OF THE DEPARTMENT

Accordingly, Part 2, Title 7, Code of Federal Regulations is amended as follows:

1. The authority citation for Part 2 continues to read as follows:

Authority: 5 U.S.C. 301 and Reorganization Plan No. 2 of 1953, unless otherwise noted.

Subpart C—Delegations of Authority to the Deputy Secretary, the Under Secretary for International Affairs and Commodity Programs, the Under Secretary for Small Community and Rural Development, and Assistant Secretaries

2. Section 2.23 is amended by revising paragraph (b)(14) to read as follows:

§ 2.23 Delegations of authority to the Under Secretary for Small Community and Rural Development.

* * * * *

(b) * * *

(14) Make grants to public bodies or other agencies to provide rural development technical assistance, rural community leadership development, and community and areawide rural development planning (7 U.S.C. 1926(a)(11).

Subpart I—Delegations of Authority by the Under Secretary for Small Community and Rural Development

§ 2.7 [Removed and reserved]

3. Section 2.71 is removed and reserved.

Dated: July 1, 1986.

For Subpart C:

Richard E. Lyng,

Secretary of Agriculture.

Dated: July 1, 1986.

For Subpart I:

Kathleen W. Lawrence,

Acting Under Secretary for Small Community and Rural Development.

[FR Doc. 86-15278 Filed 7-8-86; 8:45 am]

BILLING CODE 3410-01-M

Agricultural Marketing Service

7 CFR Part 917

[Plum Reg. 19, Amdt. 9]

Pears, Plums, and Peaches Grown in California; Amendment of Size Requirements for Plums

AGENCY: Agricultural Marketing Service, USDA.

ACTION: Final rule.

SUMMARY: This final rule amends size requirements for shipments of fresh plums grown in California by removing the Red Glow variety of plums from the variety-specific size regulations. This amendment is designed to bring the variety-specific size regulations established for plums into conformity with the longstanding practice of applying such regulations only to varieties produced in commercially significant quantities.

EFFECTIVE DATE: July 3, 1986.

FOR FURTHER INFORMATION CONTACT: Ronald L. Cioffi, Chief, Marketing Order Administration Branch, F&V, AMS, USDA, Washington, DC 20250, telephone (202) 447-5697.

SUPPLEMENTARY INFORMATION: This final rule has been reviewed under Executive Order 12291 and Departmental Regulation No. 1512-1 and has been determined to be a "non-major" rule under criteria contained therein.

Pursuant to requirements set forth in the Regulatory Flexibility Act (RFA), the Administrator of the Agricultural Marketing Service has determined that this action will not have a significant economic impact on a substantial number of small entities.

The purpose of the RFA is to fit regulatory actions to the scale of business subject to such actions in order that small businesses will not be unduly or disproportionately burdened. Marketing orders issued pursuant to the Agricultural Marketing Agreement Act, and rules issued thereunder, are unique in that they are brought about through the group action of essentially small entities acting on their own behalf. Thus, both statutes have small entity orientation and compatibility.

This final rule amends § 917.460 of Subpart—Grade and Size Regulation (51 FR 16670, May 6, 1986) by deleting the Red Glow variety from Table I of § 917.460(b). That subpart is operative pursuant to the marketing agreement and Marketing Order 917, both as amended (7 CFR Part 917), regulating the handling of pears, plums, and peaches grown in California. The agreement and order are effective under the Agricultural Marketing Agreement Act of 1937, as amended (7 U.S.C. 601-674). Pursuant to the marketing agreement and order, shipments of California plums are subject to container and pack requirements under Plum Regulation 17 (7 CFR Part 917.454; 51 FR 16670) and grade and size requirements under Plum Regulation 19 (7 CFR Part 917.460; 51 FR 16670). Because these regulations do not change substantially from season to season, they are issued on a continuing basis subject to amendment, modification or suspension as may be recommended by the applicable committee and approved by the Secretary.

This action is based upon the recommendation and information submitted by the Plum Commodity Committee and other available information. It removes the Red Glow variety of plums from the variety-specific size regulations, which is consistent with a longstanding practice of applying such regulations only to varieties produced in commercially significant quantities. Shipments of at least 10,000 packages during a season are deemed commercially significant by the industry. Shipments of the Red Glow variety that will be removed from variety-specific size regulation are expected to fall below 5,000 packages during the 1986 season and remain below that level in future seasons because many of the trees have been removed from production in recent years.

After consideration of all relevant matter presented, including the information and recommendation submitted by the committee, and other available information, it is found that the following amendment, as hereinafter set forth, will tend to effectuate the declared policy of the Act.

It is hereby further found that it is impracticable and contrary to the public interest to give preliminary notice, engage in public rulemaking and that good cause exists for not postponing the effective date of this action until 30 days after publication in the **Federal Register** (5 U.S.C. 553) in that: (1) Shipments of Red Glow plums grown in the production area are expected to begin in early July; (2) to maximize benefits to producers and handlers, this regulation should apply to as many shipments as possible during the marketing season; and (3) this action relieves restrictions on handlers.

List of Subjects in 7 CFR Part 917

Marketing agreements and orders, Pears, Plums, Peaches from California.

PART 917—[AMENDED]

1. The authority citation for 7 CFR Part 917 continues to read as follows:

Authority: Secs. 1-19, 48 Stat. 31, as amended; 7 U.S.C. 601-674.

§ 917.460 [Amended]

2. Section 917.460 (Plum Regulation 19) of Subpart—Grade and Size Regulation (7 CFR Part 917.459—917.461; 51 FR 16670) is amended in the following manner. First, the title of the second column of Table I of § 917.460(b) is corrected to read as follows: "Column B, Plums per sample." The "Column B" designation was inadvertently omitted in the final rule (51 FR 16670). Secondly, Table I of § 917.460(b) is amended by removing the Red Glow variety of plums from such table. Specifically, the row

containing "Red Glow", "60", and "16" is removed from Columns A, B, and C, respectively.

Dated: July 3, 1986.

Thomas R. Clark,

Acting Director, Fruit and Vegetable Division, Agricultural Marketing Service.

[FR Doc. 86-15463 Filed 7-8-86; 8:45 am]

BILLING CODE 3410-02-M

7 CFR Part 981

Handling of Almonds Grown in California; Revision of Salable, Reserve, and Export Percentages for the 1985-86 Crop Year

AGENCY: Agricultural Marketing Service, USDA.

ACTION: Final rule.

SUMMARY: This action revises the salable and reserve percentages for marketable California almonds received by handlers during the 1985-86 crop year, which began July 1, 1985. The salable percentage is increased from 85 percent to 90 percent, and the reserve percentage is correspondingly decreased from 15 percent to 10 percent. This action is taken under the marketing order for almonds grown in California to provide additional supplies of almonds for marketing.

EFFECTIVE DATE: July 9, 1986.

FOR FURTHER INFORMATION CONTACT: Ronald L. Cioffi, Chief, Marketing Order Administration Branch, Fruit and Vegetable Division, AMS, USDA, Washington, DC 20250, (202) 447-5697.

SUPPLEMENTARY INFORMATION: This final rule has been reviewed under Executive Order 12291 and Departmental Regulation No. 1512-1 and has been classified a "non-major" rule under criteria contained therein.

Pursuant to requirements set forth in the Regulatory Flexibility Act (RFA), the Administrator of the Agricultural Marketing Service has determined that this action will not have a significant economic impact on a substantial number of small entities.

The purpose of the RFA is to fit regulatory actions to the scale of business subject to such actions in order that small businesses will not be unduly or disproportionately burdened. Marketing orders issued pursuant to the Agricultural Marketing Agreement Act, and rules issued thereunder, are unique in that they are brought about through group action of essentially small entities on their own behalf. Thus, both statutes have small entity orientation and compatibility.

It has been determined that a situation exists which warrants publication of this final rule without prior opportunity for public comment. This action relaxes restrictions on handlers by allowing them to ship additional almonds to salable outlets and should be taken promptly to ensure a sufficient quantity of almonds for normal domestic and export needs and maintain the current momentum of sales. Therefore, pursuant to the administrative procedure provisions in 5 U.S.C. 553, it is found upon good cause that notice of public rulemaking and other public procedures with respect to this final action are impracticable and contrary to the public interest.

It also is found that good cause exists for not postponing the effective date of this action until 30 days after publication in the **Federal Register** (5 U.S.C. 553). The marketing order for California almonds requires that revised salable, reserve, and export percentages established for a particular crop year apply to all marketable almonds received by handlers from the beginning of that year. The 1985-86 crop year began July 1, 1985.

The authority to establish salable and reserve percentages is prescribed in § 981.47 of the marketing agreement and Order No. 981, both as amended (7 CFR 981), regulating the handling of almonds grown in California and hereinafter referred to collectively as the "order." The order is effective under the Agricultural Marketing Agreement Act of 1937, as amended (7 U.S.C. 601-674). Section 981.48 of the order provides for an increase in the salable percentage by the Secretary upon findings of fact that the quantity of salable almonds is not sufficient to satisfy trade demand and desirable carryover requirements for the crop year.

On September 4, 1985, a final rule was published in the **Federal Register** (50 FR 35768) establishing salable, reserve, and export percentages of 80 percent, 20 percent, and 0 percent, respectively, for the 1985-86 crop year. That action was based on a unanimous recommendation of the Almond Board of California, which works with USDA in administering the order, at its July 25, 1985, meeting.

On March 6, 1986, a final rule was published in the **Federal Register** (51 FR 7741) revising the salable, reserve, and export percentages to 85 percent, 15 percent, and 0 percent, respectively, for the 1985-86 crop year. That action was based on a unanimous recommendation of the Board at its January 28, 1986, meeting.

On June 6, 1986, the Board met to review the salable and reserve percentages established for the 1985-86 crop year and the supply and demand estimates from which those percentages were derived. According to the Board's marketing policy, the Board planned to release the unallocated reserve if the estimate for the 1986 crop is below 400 million pounds. The current estimate of the 1986 crop is 250 million pounds.

Pursuant to the amended § 981.48 of the order, the Board recommended an increase in the salable percentage to 90 percent and a corresponding decrease in the reserve percentage to 10 percent. In arriving at this recommendation, the Board noted that the current estimate of 1985 production is up 4.9 million pounds from its July 25, 1985, estimate to 462.3 million pounds. The Board's current estimate of loss and exempt almonds is up .2 million pounds to 22.2 million pounds. The Board increased its estimate of export trade demand by 15.0 million pounds to 340.0 million pounds. The Board also increased the quantity of almonds deemed desirable to be carried out on June 30, 1986, from 122.6 million pounds to 133.6 million pounds to reflect the smaller crop and increased trade demand. Therefore, an increase in the salable percentage is necessary to ensure that ample supplies of almonds are available to meet 1985-86 trade demand needs.

The estimates used by the Board in recommending the revised salable and reserve percentages are tabulated below. The Board's July 25, 1985, estimates and the first revision estimates are shown as a basis of comparison.

MARKETING POLICY ESTIMATES—1985 CROP

[Kernel Weight Basis—million pounds]

	Initial estimate (7/25/85)	First revised estimate.(1/28/86)	Second revised estimate.(6/6/86)
Estimated production:			
1. 1985 Production	495.0	457.4	462.3
2. Loss and Exempt	25.0	22.0	22.2
3. Marketable Production	470.0	435.4	440.1
Estimated trade demand:			
4. Domestic	150.0	150.0	150.0
5. Export	250.0	325.0	340.0
6. Total	400.0	475.0	490.0
Inventory adjustment:			
7. Carryin 7/1/85	228.0	227.5	227.5
8. Desirable Carryover 6/30/86	204.0	122.6	133.6
9. Adjustment	(24.0)	(104.9)	(93.9)
Salable/reserve:			
10. Adjusted Trade Demand (6 plus 9)	376.0	370.1	396.1
11. Reserve (3 minus 10)	94.0	65.3	44
12. Salable percent (10 3 x 100)	80	85	90
13. Reserve percent (100 percent minus 12)	20	15	10

The reserve of 10 percent (44 million pounds) must be withheld by handlers.

from normal domestic and export outlets to meet their reserve obligations.

After consideration of all relevant matter presented, including the information and recommendation submitted by the Board, and other available information, it is further found that the revision of the salable and reserve percentages, as hereinafter set forth, will tend to effectuate the declared policy of the act.

List of Subjects in 7 CFR Part 981

Marketing agreements and orders, Almonds, and California.

1. The authority citation for 7 CFR Part 981 continues to read as follows:

Authority: Secs. 1–19, 48 Stat. 31, as amended; 7 U.S.C. 601–674.

2. Section 981.234 of Subpart—Salable, Reserve, and Export Percentages is revised to read as follows: (This subpart and section will not appear in the Code of Federal Regulations).

PART 981—ALMONDS GROWN IN CALIFORNIA

Subpart—Salable, Reserve, and Export Percentages

§ 981.234 Salable, reserve, and export percentages for almonds during the crop year beginning July 1, 1985.

The salable, reserve, and export percentages during the crop year beginning July 1, 1985, shall be 90 percent, 10 percent, and 0 percent, respectively.

Dated: July 3, 1986.

Thomas R. Clark,

Acting Director, Fruit and Vegetable Division.

[FR Doc. 86–15461 Filed 7–8–86; 8:45 am]

BILLING CODE 3410–02–M

---

7 CFR Part 981

Handling of Almonds Grown in California; Suspension of the Deadline To Increase the Salable Percentage for California Almonds

AGENCY: Agricultural Marketing Service, USDA.

ACTION: Final rule.

SUMMARY: This final rule will suspend for the 1985–86 crop year the deadline date in § 981.48 to increase the salable percentage for California almonds. Section 981.48 prescribes that an increase in the salable percentage by the Almond Board of California must be recommended to the Secretary prior to May 15. Suspension of that date will allow the Board to further revise its salable, reserve, and export percentages for the 1985–86 crop year. This action was recommended by the Board which works with USDA in administering the marketing order.

EFFECTIVE DATE: July 9, 1986.

FOR FURTHER INFORMATION CONTACT: Ronald L. Cioffi, Chief, Marketing Order Administration Branch, Fruit and Vegetable Division, AMS, USDA, Washington, DC 20250 (202) 447–5697.

SUPPLEMENTARY INFORMATION: This final rule has been reviewed under USDA guidelines implementing Executive Order 12291 and Departmental Regulation 1512–1 and has been classified a "non-major" rule under criteria contained therein.

Pursuant to requirements set forth in the Regulatory Flexibility Act (RFA), the Administrator of the Agricultural Marketing Service has determined that this action will not have a significant economic impact on a substantial number of small entities.

The purpose of the RFA is to fit regulatory actions to the scale of business subject to such actions in order that small businesses will not be unduly or disproportionately burdened. Marketing orders issued pursuant to the Agricultural Marketing Agreement Act and rules issued thereunder, are unique in that they are brought about through group action of essentially small entities for their own behalf. Thus, both statutes have small entity orientation and compatability.

It has been determined that a situation exists which warrants publication of this final rule without prior opportunity for public comment. This action will suspend the deadline date by which the Board must recommend to the Secretary an increase of the salable percentage. Suspension of that date will allow the Board to further revise their salable, reserve and export percentages. Action needs to be taken promptly to ensure that a sufficient quantity of almonds are released to satisfy market needs. Therefore, it is found upon good cause that notice of public rulemaking and other public procedures with respect to this final rule are impracticable and contrary to the public interest.

It also is found that good cause exists for not postponing the effective date of this action until 30 days after publication in the **Federal Register** (5 U.S.C. 553). The marketing order for California almonds requires that revised salable, reserve, and export percentages established for a particular crop year apply to all marketable almonds received by handlers from the beginning of that year. The 1985–86 crop year began July 1, 1985, and ended June 30, 1986.

This action will suspend the phrase "prior to May 15" in § 981.48 of marketing agreement and Order No. 981, both as amended (7 CFR 981), regulating the handling of almonds grown in California. The suspension will be applicable to almonds received by handlers during the 1985–86 crop year. The marketing agreement and order are effective under the Agricultural Marketing Agreement Act of 1937, as amended (7 U.S.C. 601–674). The affected section, 981.48, prescribes the date by which the Board must recommend to the Secretary an increase of the salable percentage, if it finds that the quantity of salable almonds is not sufficient to satisfy trade demand and desirable carryover requirements for the current crop year.

According to the Board's 1985–86 marketing policy, it planned to release the unallocated reserve to handlers if the 1986 crop was estimated to be below 400 million pounds. The unallocated reserve is that portion of the reserve handlers must withhold for later disposition as salable almonds or into the allocated reserve. Almonds in the allocated reserve are used for market development projects such as almond butter or school lunch programs. On May 9, 1986, the California State Crop Reporting Service estimated the 1986 crop at only 250 million pounds due to rain damage to the crop. Considering the circumstances, a mail vote among Board members was conducted to save time and meeting costs. However, the results of the vote were not available until after the May 15 deadline because votes from some Board members were received late. Therefore, the vote failed to meet order provisions requiring votes conducted by mail to be unanimous. This necessitated the Board to meet and recommend a suspension of the May 15 date to accomplish the desired increase in the salable percentage.

The suspension of the deadline date will allow restrictions to be relaxed on handlers by allowing them to ship additional almonds to salable outlets to maintain the industry's current sales momentum.

After consideration of all relevant matter presented, including the information and recommendation by the Board, and other available information, it is further found that the suspension of the May 15 date, as hereinafter set forth, will tend to effectuate the declared policy of the act.

List of Subjects in 7 CFR Part 981

Marketing agreements and orders, Almonds, and California.

1. The authority citation for 7 CFR Part 981 continues to read as follows:

Authority: Secs. 1–19, 48 Stat. as amended; 7 U.S.C. 601–674.

PART 981—[AMENDED]

§ 981.48 [Amended]

2. Section 981.48 is amended by suspending the phrase "prior to May 15" with regard to almonds received by handlers during the 1985–86 crop year. (This suspension shall not appear in the Code of Federal Regulations.)

Dated: July 3, 1986.

Alan T. Tracy,

Acting Assistant Secretary, Marketing and Inspection Services.

[FR Doc. 86–15462 Filed 7–8–86; 8:45 am]

BILLING CODE 3410-02-M

DEPARTMENT OF ENERGY

10 CFR Part 300

Coal Loan Guarantee Program

AGENCY: Department of Energy.

ACTION: Suspension of Activity Under the Coal Loan Guarantee Program.

SUMMARY: In a notice published in the **Federal Register** of May 7, 1986 (51 FR 16854), the Department of Energy (DOE) proposed to suspend activity under the Coal Loan Guarantee Program, 10 CFR Part 300, for loan guarantees for the purpose of developing, expanding, or reopening underground coal mines, and to terminate the acceptance of applications thereunder. This action is being taken in view of the fact that no loan guarantees have been granted since the program's implementation in 1978.

Interested persons were invited to submit to DOE written comments, data, views, or arguments with respect to the proposal no later than June 6, 1986. No comments were received; therefore, DOE is suspending the program in accordance with the proposed notice, effective August 8, 1986.

DATE: Program activity suspension date is August 8, 1986.

FOR FURTHER INFORMATION CONTACT:

Mr. Peter Muchunas, Department of Energy, Office of Coal Utilization Systems, FE–23, Room C–156, Washington, DC 20545, Telephone 301–353–2603

Mr. Lawrence R. Oliver, Department of Energy, Office of General Counsel, GC–34, Room 6B–190, Washington, DC 20585, Telephone 202–252–2440.

SUPPLEMENTARY INFORMATION: The Coal Loan Guarantee Program (the Program) was designed to encourage and assist relatively small coal producers to increase the Nation's coal production from low-sulfur underground coal mines; to enhance competition within the coal industry; to encourage new market entry by small coal producers who, historically, have been unable to obtain adequate long-term project financing; and to encourage the construction of coal preparation plants designed to reduce the sulfur content of coal.

The Program was authorized by Congress in 1975, by section 102 of the Energy Policy and Conservation Act (EPCA) (Pub. L. 94–163). EPCA gave the Federal Energy Administration—and ultimately DOE [1]—authority to guarantee loans to develop new underground coal mines. This authority was enlarged in 1976 to cover guarantees for underground coal mine expansions and reopenings.[2] The regulations, governing the Program were published in the **Federal Register** on November 7, 1978 (43 FR 51956).

Throughout the Program's 6-year existence, only 30 applications have been received, and only one within the past 4 years. Because no applicants have been able to satisfy the law's requirements, no loan guarantees have been granted; and only two applicants have qualified for DOE conditional commitments, which have since expired. Therefore, in light of the lack of public interest in the Program, suspension of activity under the Program is warranted.

Review Under Executive Order 12291

Today's action has been reviewed under Executive Order 12291 (February 17, 1981). DOE has concluded that it is not a "major rule" because suspension of activity under the Coal Loan Guarantee Program will not result in (1) an annual effect on the economy of $100 million or more, (2) a major increase in costs or prices for consumers, individual industries, Federal, State or local government agencies, or geographic regions, or (3) significant adverse effects on competition, employment, investment, productivity, innovation, or on the ability of United States-based enterprises to compete in domestic or export markets.

In accordance with requirements of the Exective Order, this action has been reviewed by OMB.

[1] The 1977 DOE Act (Pub. L. 95–91) transferred, inter alia, the functions vested by law in the Administrator of the Federal Energy Administration to the Secretary of Energy.

[2] Energy Conservation and Production Act (ECPA) (Pub. L. 94–385), section 164, dated August 14, 1976.

Review Under the Regulatory Flexibility Act

This action, as proposed, was reviewed under the Regulatory Flexibility Act of 1980, Pub. L. 96–354, which requires preparation of a regulatory flexibility analysis for any action which is likely to have a significant economic impact on a substantial number of small entities. Pursuant to section 605 of the Regulatory Flexiblity Act, the Department certifies that this action is not a regulation which will have significant economic impact on a substantial number of small entities within the meaning of the Act, and, therefore, does not require preparation of a regulatory flexibility analysis. DOE has transmitted that certification to the Small Business Administration. The basis for certification is that, since its implementation in 1978, DOE's activities under the Coal Loan Guarantee Program have not resulted in the opening of any new underground coal mines, nor the expansion or reopening of any existing underground coal mines.

Review Under the National Environmental Policy Act

DOE has determined that this action does not constitute a major Federal action significantly affecting the quality of the human environment and, therefore, does not require the preparation of an Environmental Impact Statement.

Review Under the Paperwork Reduction Act

As a result of this action, no collection of information is required. It, therefore, is not necessary to submit this action to the Office of Management and Budget for review under the Paperwork Reduction Act (44 U.S.C. 3501–3520).

List of Subjects in 10 CFR Part 300

Coal, Loan programs/energy, Mines.

Catalog of Federal Domestic Assistance Number

The Coal Loan Guarantee Program of the Department of Energy is listed as number 81.056 in the Catalog of Federal Domestic Assistance, which is available for inspection at the DOE Public Information Office, Room 1E–190, Forrestal Building, 1000 Independence Avenue, SW., Washington, DC 20585, and available for purchase from the Superintendent of Documents, Government Printing Office, Washington, DC 20402.

Authority: Sections 501 and 644 of the DOE Organization Act (Pub. L. 95–91) (42 U.S.C. 7191; 7254), section 102 of the Energy Policy and Conservation Act (Pub. L. 94–163) (42

U.S.C. 6211), as amended by section 164 of the Energy Conservation and Production Act (Pub. L. 94-385), and by section 802 of the Powerplant and Industrial Fuel Use Act (Pub. L. 95-620).

Issued in Washington, DC, July 1, 1986.

Donald L. Bauer,

Acting Assistant Secretary for Fossil Energy

[FR Doc. 86-15395 Filed 7-8-86; 8:45 am]

BILLING CODE 6450-01-M

DEPARTMENT OF TRANSPORTATION

Federal Aviation Administration

14 CFR Part 39

[Docket No. 86-ANE-13; Amdt. 39-5339]

Airworthiness Directives; CFM International CFM56-3/-3B Turbofan Engines

AGENCY: Federal Aviation Administration (FAA), DOT.

ACTION: Final rule.

SUMMARY: This amendment amends an existing airworthiness directive (AD) which requires inspection of the transfer gearbox for radial drive shaft oil distributor looseness and condition of the spirolock on CFM56-3/-3B turbofan engines. The amendment is needed to change the original one time inspection for oil distributor looseness to a repetitive inspection, along with changes to the inspection procedure. This amendment is needed to prevent radial shaft disengagement which will result in an engine shutdown.

DATE: Effective July 7, 1986.

Compliance Schedule—As prescribed in the body of the AD.

Incorporation by Reference—Approved by the Director of the Federal Register on July 7, 1986.

ADDRESSES: The applicable service bulletin (SB) may be obtained from CFM International, 1 Neumann Way, Cincinnati, Ohio 45215. A copy of the SB is contained in Rules Docket Number 86-ANE-13, in the Office of the Regional Counsel, Federal Aviation Administration, New England Region, 12 New England Executive Park, Burlington, Massachusetts 01803, and may be examined between the hours of 8:00 a.m. and 4:30 p.m., Monday through Friday, except Federal holidays.

FOR FURTHER INFORMATION CONTACT: Gordon Vertescher, Engine Certification Branch, ANE-142, Engine Certification Office, Aircraft Certification Division, Federal Aviation Administration, New England Region, 12 New England Executive Park, Burlington, Massachusetts 01803, telephone (617) 273-7087.

SUPPLEMENTARY INFORMATION: This amendment amends Amendment 39-5281 (44 FR 11034), AD 86-08-05, which currently requires a one time inspection of the transfer gearbox for radial drive shaft oil distributor looseness and condition of the spirolock on CFM56-3/-3B turbofan engines. After issuing Amendment 39-5281, the FAA has determined that, because of an inflight shutdown resulting from radial driveshaft disengagement approximately 628 hours following compliance with the original AD, an amendment is required. Therefore, the FAA is amending Amendment 39-5281 by requiring a repetitive inspection at a maximum of 375 hour intervals, an increase in torque check limit, and a required minimum engine cool down period of CFM International CFM56-3/-3B turbofan engines.

Since a stituation exists that requires the immediate adoption of this regulation, it is found that notice and public procedure hereon are impracticable, and good cause exists for making this amendment effective in less than 30 days.

Conclusion: The FAA has determined that this regulation is an emergency regulation that is not considered to be major under Executive Order 12291. It is impracticable for the agency to follow the procedures of Order 12291 with respect to this rule since the rule must be issued immediately to correct an unsafe condition in aircraft. It has been further determined that this action involves an emergency regulation under DOT Regulatory Policies and Procedures (44 FR 11034; February 26, 1979). If this action is subsequently determined to involve a significant/major regulation, a final regulatory evaluation or analysis, as appropriate, will be prepared and placed in the regulatory docket (otherwise, an evaluation or analysis is not required). A copy of it, when filed, may be obtained by contacting the person identified under the caption "**FOR FURTHER INFORMATION CONTACT**".

List of Subjects in 14 CFR Part 39

Engines, Air transportation, Aircraft, Aviation safety, Incorporation by reference.

Adoption of the Amendment

PART 39—[AMENDED]

Accordingly, pursuant to the authority delegated to me, the Federal Aviation Administration (FAA) amends Part 39 of the Federal Aviation Regulations (FAR) as follows:

1. The authority citation for Part 39 continues to read as follows:

Authority: 49 U.S.C. 1354(a), 1421 and 1423; 49 U.S.C. 106(g) (Revised Pub. L. 97-449, January 12, 1983); and 14 CFR 11.89.

§ 39.13 [Amended]

2. By amending § 39.13, Amendment 39-5281 (44 FR 11034), Airworthiness Directive (AD) 86-08-05, by revising the compliance schedule and accomplishment instructions. The amended AD is being restated in its entirety for clarity as follows:

CFM International: Applies to CFM International (CFMI) CFM56-3/-3B series turbofan engines.

Compliance is required within the next 80 hours time in service (TIS) after the effective date of this AD, unless already accomplished.

To prevent engine shutdown from radial drive shaft disengagement, accomplish the following:

Inspect oil distributor Part Number (P/N) 335-305-800-0 and spirolock P/N 649-363-137-0 in accordance with CFMI CFM56-3/-3B Service Bulletin (SB) 72-205, Revision 3, dated April 16, 1986, or FAA approved equivalent. However, the SB torque check increases from 50 inch-lbs. to 100 inch-lbs. and a minimum of 2 hours cool down time is required prior to inspection for the purpose of this AD.

(a) If the oil distributor is loose and spirolock is serviceable, either re-inspect the spirolock for serviceability at intervals not to exceed 125 hours TIS since last inspection, or replace the oil distributor in accordance with SB 72-205, Revision 3, and reinspect within 375 hours.

(b) If the oil distributor is loose and spirolock is not serviceable, replace the spirolock prior to further flight and either reinspect the spirolock for serviceability within 250 hours TIS, or replace the oil distributor and reinspect within 375 hours.

(c) If the oil distributor is tight, reinspect within 375 hours.

Aircraft may be ferried in accordance with the provisions of FAR 21.197 and 21.199 to a base where the AD can be accomplished.

Upon request, an equivalent means of compliance with the requirements of this AD may be approved by the Manager, Engine Certification Office, Aircraft Certification Division, Federal Aviation Administration, New England Region, 12 New England Executive Park, Burlington, Massachusetts 01803.

Upon submission of substantiating data by an owner or operator through an FAA maintenance inspector, the Manager, Engine Certification Office, New England Region, may adjust the compliance time specified in this AD.

CFMI CFM56-3/-3B SB 72-205, Revision 3, dated April 16, 1986, identified and described in this document, is incorporated herein and made a part hereof pursuant to 5 U.S.C. 552(a)(1). All persons affected by this directive who have not already received this document from the manufacturer may obtain copies upon request to CFM International, 1 Neumann Way,

Cincinnati, Ohio 45215. This document also may be examined at the Office of the Regional Counsel, Federal Aviation Administration, New England Region, 12 New England Executive Park, Burlington, Massachusetts 01803, Rules Docket Number 86-ANE-13, Room Number 311, between the hours of 8:00 a.m. and 4:30 p.m., Monday through Friday, except Federal holidays.

This amendment becomes effective on July 7, 1986.

This amendment amends Amendment 39-5281 (44 FR 11034), AD 86-08-05.

Issued in Burlington, Massachusetts, on June 13, 1986.

Robert E. Whittington,

Director, New England Region.

[FR Doc. 86-15487 Filed 7-7-86; 8:57 am]

BILLING CODE 4910-13-M

---

14 CFR Part 39

[Docket No. 85-CE-39-AD; Amdt. 39-5354]

Airworthiness Directive; Mitsubishi Heavy Industries, Limited, Models MU-2B, MU-2B-10, MU-2B-15, MU-2B-20, MU-2B-25, MU-2B-26, MU-2B-30, MU-2B-35, and MU-2B-36 Airplanes

AGENCY: Federal Aviation Administration (FAA), DOT.

ACTION: Final rule.

SUMMARY: This amendment supersedes an existing Airworthiness Directive (AD) 80-18-12R1 (Amendment 39-3956), applicable to certain Mitsubishi Heavy Industries, Limited (MHI), MU-2B, -10, -15, -20, -25, -26, -30, -35, and -36 airplanes. The existing AD requires repetitive inspections and replacement, as necessary, of certain nose landing gear strut assembly components on the above airplanes. The superseding AD shortens the hours time-in-service (TIS) for accomplishment of the initial inspection. The new AD is needed because the FAA has learned of three incidents of cracks in the nose landing gear outer cylinder assembly which were discovered prior to the first inspection specified in AD 80-18-12R1. A crack in the nose landing gear outer cylinder assembly could lead to collapse of the nose landing gear. This action will help prevent failure of the nose landing gear strut.

EFFECTIVE DATE: August 13, 1986.

Compliance as prescribed in the body of the AD.

ADDRESSES: MHI Service Bulletin (S/B) No. 181 Revision B dated, August 8, 1985, applicable to this AD, may be obtained from Mitsubishi Heavy Industries, Ltd., 10, Oye-Cho, Minato-ku, Nagoya, Japan, or Beech Aircraft Corporation (Licensee for Mitsubishi), 9709 East Central, Post Office Box 85, Wichita, Kansas 67201 or the Rules Docket at the address below. A copy of this information is also contained in the Rules Docket, FAA, Office of the Regional Counsel, Room 1558, 601 East 12th Street, Kansas City, Missouri 64106.

FOR FURTHER INFORMATION CONTACT: Mr. Jerry Sullivan, Aerospace Engineer, Airframe Section, ANM-172W, Western Aircraft Certification Office, Northwest Mountain Region, FAA, Post Office Box 92007, Worldway Postal Center, Los Angeles, California 90009-2007; Telephone (213) 297-1166.

SUPPLEMENTARY INFORMATION: A proposal to amend Part 39 of the Federal Aviation Regulations to include an AD applicable to certain Mitsubishi Heavy Industries, MU-2B series airplanes requiring initial inspection at 200 hours TIS rather than 4,000 hours TIS was published in the **Federal Register** on January 13, 1986 (51 FR 1383).

The proposal resulted from the manufacturer's report that a crack has been found in a nose landing gear strut assembly on an MU-2B airplane that had not been overhauled, and which was found prior to the first inspection required by their S/B No. 181, Revision A. The FAA Maintenance Analysis Center has two other reports of similar cracks. As a result, MHI has issued MU-2 S/B No. 181 Revision B, dated April 8, 1985, applicable to certain model of MU-2B airplanes which gives instructions for inspection and replacement of the nose landing gear strut assembly and which changes the initial inspection of the nose landing gear outer cylinder assembly from 4,000 hours total TIS to 200 hours TIS. The Japan Civil Aviation Bureau, who has responsibility and authority to maintain the continuing airworthiness of these airplanes in Japan has classified this service bulletin and the actions recommended therein by the manufacturer as mandatory and has issued (Japanese) AD TCD-1768-1-85 to assure the continued airworthiness of the affected airplanes. On airplanes operated under Japanese regulations, this action has the same effect as an AD on airplanes certified for operation in the United States.

The FAA relies upon the certification of the Japan Civil Aviation Bureau combined with the FAA review of pertinent documentation in finding compliance of the design of these airplanes with the applicable United States airworthiness requirements and the airworthiness conformity of products of this design certificated for operation in the United States. The FAA has examined the available information related to the issuance of MU-2 S/B No. 181 Revision B and the mandatory classification of this service bulletin by the Japan Civil Aviation Bureau. Based on the foregoing, the FAA has determined that the condition addressed by MU-2 S/B No. 181 Revision B is an unsafe condition that may exist on other products of this type design certificated for operation in the United States.

Consequently, an AD was proposed, applicable to certain MHI Models MU-2B, MU-2B-10, MU-2B-15, MU-2B-20, MU-2B-25, MU-2B-26, MU-2B-30, MU-2B-35, and MU-2B-36 airplanes. The AD requires repetitive inspections on these model airplanes until the nose landing gear strut assembly is replaced in accordance with MHI MU-2B S/B No. 181, Revision B.

Interested persons have been afforded the opportunity to comment on the proposal. One commenter responded supporting the FAA proposal. No objections were received on the FAA determination of the related cost to the public. Accordingly, the proposal is adopted without change.

There are approximately 388 United States registered airplanes affected by this superseding AD. The cost of complying with this proposed AD is estimated to be $660 per airplane. The cost to the private sector is estimated to be $256,080. Few, if any, small entities own the affected airplanes. The cost of compliance is so minimal that it would not impose a significant economic burden on any such owner.

Therefore, I certify that this action: (1) Is not a major rule under the provisions of Executive Order 12291, (2) is not a significant rule under DOT Regulatory Policies and Procedures (44 FR 11034; February 26, 1979) and (3) will not have a significant economic impact on a substantial number of small entities under the criteria of the Regulatory Flexibility Act. A copy of the final evaluation has been prepared for this action and has been placed in the Regulatory Docket. A copy of it may be obtained by contacting the Rules Docket at the location provided under the caption **"ADDRESSES"**.

List of Subjects in 14 CFR Part 39

Air transportation, Aviation safety, Aircraft, Safety.

Adoption of the Amendment

Accordingly, pursuant to the authority delegated to me by the Administrator, the Federal Aviation Administration amends § 39.13 of Part 39 of the Federal Aviation Regulations as follows:

PART 39—[AMENDED]

1. The authority citation for Part 39 continues to read as follows:

Authority: 49 U.S.C. 1354(a), 1421 and 1423; 49 U.S.C. 106(g) (Revised Pub. L. 97-499, January 12, 1983); 14 CFR 11.89.

§ 39.13 [Amended]

2. By superseding Amendment 39-3892 as amended by Amendment 39-3956, AD 80-18-12 R1 with the following new AD:

Mitsubishi Heavy Industries, Ltd.: Applies to Model MU-2B, MU-2B-10, MU-2B-15, MU-2B-20, MU-2B-25, MU-2B-26, (Serial Numbers (S/N) 008 through 347 except S/Ns 313 and 321); MU-2B-30, MU-2B-35, MU-2B-36 (S/Ns 501 through 696 except S/Ns 652 and 661) airplanes with U.S. Type Certificate No. A2PC, with certain nose landing gear strut assemblies installed, certificated in any category. (This AD does not apply to MU-2B series airplanes having serial numbers with "SA" suffix.)

Compliance: Required as indicated, unless already accomplished.

To preclude failure of the nose landing gear (NLG) strut assembly with part numbers and serial numbers listed in MHI MU-2 Service Bulletin (S/B) 181 Revision B, dated April 8, 1985 (hereafter referred to as S/B 181) installed, accomplish the following:

(a) For those airplanes with NLG strut assemblies having 4,000 or more hours time-in-service (TIS) on the effective date of this AD, within the next 200 hours TIS, and thereafter at intervals not to exceed 200 hours TIS from the last inspection, inspect for cracks using magnetic flux inspection method or fluorescent penetrant inspection method in accordance with "INSTRUCTIONS", Part I of S/B No. 181.

(b) For those airplanes with NLG strut assemblies having less than 4,000 hours TIS on the effective date of this AD;

(1) For the outer cylinder assembly, within the next 200 hours TIS and thereafter at intervals not to exceed 200 hours TIS from the last inspection, inspect for cracks using magnetic flux inspection method or fluorescent penetrant inspection method in accordance with "INSTRUCTIONS", Part I, of S/B No. 181.

(2) For the trunnion and the axle assembly, prior to achieving 4,200 hours total TIS and thereafter at intervals not to exceed 200 hours TIS from the last inspection, inspect for cracks using magnetic flux inspection method or fluorescent penetrant inspection method in accordance with "INSTRUCTIONS", Part I of S/B No. 181.

(c) If cracks are found during any inspection required by paragraph (a) or (b) of this AD, prior to further flight, replace the cracked parts with serviceable parts marked "SP" in accordance with "INSTRUCTIONS", Part II of S/B No. 181.

(d) Installation of the outer cylinder assembly, axle assembly or trunnion marked "SP" is terminating action for the repetitive inspection for that particular part. When all affected parts are replaced in accordance with Part II, permanently identify the NLG strut assembly with "SB 181" in vicinity of the NLG assembly part number.

(e) Special flight permits may be issued in accordance with FAR Section 21.197 to ferry aircraft to a maintenance base in order to accomplish this AD.

(f) An equivalent method of compliance with this AD, if used, must be approved by the Manager, Western Aircraft Certification Office, ANM-170W, Northwest Mountain Region, FAA, Post Office Box 92007, Worldway Postal Center, Los Angeles, California 90009-2007.

All persons affected by this AD may obtain copies of the documents referred to herein upon request to Mitsubishi Heavy Industries, Ltd., 10, Oye-Cho, Minato-ku, Nagoya, Japan, or Beech Aircraft Corporation (Licensee for Mitsubishi), 9709 East Central, Post Office Box 85, Wichita, Kansas 67201, or FAA, Office of the Regional Counsel, Room 1558, 601 East 12th Street, Kansas City, Missouri 64106.

This amendment supersedes Amendment 39-3892 (45 FR 54729) as amended by Amendment 39-3956 (45 FR 70227), AD-80-18-12 R1.

This amendment becomes effective August 13, 1986.

Issued in Kansas City, Missouri, on June 27, 1986.

Jerold M. Chavkin,

Acting Director, Central Region.

[FR Doc. 86-15357 Filed 7-8-86; 8:45 am]

BILLING CODE 4910-13-M

---

14 CFR Part 71

[Airspace Docket No. 86-AWA-6]

Alteration of VOR Federal Airways—TX

AGENCY: Federal Aviation Administration (FAA), DOT.

ACTION: Final rule.

SUMMARY: This action realigns Federal Airways V-194, V-198 and V-477 to support new Standard Terminal Arrival Routes (STAR's) to both Houston Intercontinental and Hobby Airports and provide for increased traffic capacity. Additionally, V-556 is extended from Scholes to Sabine Pass, TX, for the enhancement of flight planning/filing and air traffic control service.

EFFECTIVE DATE: 0901 UTC, August 28, 1986.

FOR FURTHER INFORMATION CONTACT: Mr. Brent A. Fernald, Airspace and Air Traffic Rules Branch (ATO-230), Airspace Rules and Aeronautical Information Division, Air Traffic Operations Service, Federal Aivation Administration, 800 Independence Avenue, SW., Washington, D.C. 20591; telephone: (202) 426-8783.

SUPPLEMENTARY INFORMATION:

History

On March 31, 1986, the FAA proposed to amend Part 71 of the Federal Aviation Regulations (14 CFR Part 71) to realign VOR Federal Airways V-477 between Humble and Leona VORTAC's and V-194 and V-198 between Hobby and Sabine Pass VORTAC's to support new STAR's to both Houston Intercontinental and Hobby Airports, to increase traffic capacity through better segregation of arrival/departure flows. Additionally, extension of V-556 from Scholes to Sabine Pass, TX, was proposed to enhance flight planning/filing and air traffic control service (51 FR 10880). Interested parties were invited to participate in this rulemaking proceeding by submitting written comments on the proposal to the FAA. No comments objecting to the proposal were received. Except for editorial changes, this amendment is the same as that propsed in the notice. Section 71.123 of Part 71 of the Federal Aviation Regulations was republished in Handbook 7400.6B dated January 2, 1986.

The Rule

This amendment to Part 71 of the Federal Aviation Regulations realigns VOR Federal Airways V-194 and V-198 between Hobby and Sabine Pass, TX; V-477 between Humble and Leona, TX, VORTAC's and extends V-556 from Scholes to Sabine Pass VORTAC.

The FAA has determined that this regulation only involves an established body of technical regulations for which frequent and routine amendments are necessary to keep them operationally current. It, therefore—(1) Is not a "major rule" under Executive Order 12291; (2) is not a "significant rule" under DOT Regulatory Policies and Procedures (44 FR 11034; February 26, 1979); and (3) does not warrant preparation of a regulatory evaluation as the anticipated impact is so minimal. Since this is a routine matter that will only affect air traffic procedures and air navigation, it is certified that this rule will not have a significant economic impact on a substantial number of small entities under the criteria of the Regulatory Flexibility Act.

List of Subjects in 14 CFR Part 71

Aviation safety, VOR federal airways.

Adoption of the Amendment

Accordingly, pursuant to the authority delegated to me, Part 71 of the Federal

Aviation Regulations (14 CFR Part 71) is amended, as follows:

PART 71—[AMENDED]

1. The authority citation for Part 71 continues to read as follows:

Authority: 49 U.S.C. 1348(a), 1354(a), 1510; Executive Order 10854; 49 U.S.C. 106(g) (Revised Pub. L. 97-449, January 12, 1983); 14 CFR 11.69.

§ 71.123 [Amended]

2. § 71-123 is amended as follows:

V-194—[Amended]

By removing the words "INT Hobby 091° and Sabine Pass, TX, 265° radials; Sabine Pass" and substituting the words "Sabine Pass, TX"

V-198—[Amended]

By removing the words "INT Hobby 091° and Sabine Pass, TX, 265° radials; Sabine Pass" and substituting the words, "Sabine Pass, TX"

V-477—[Revised]

From Humble, TX, via INT Humble 349° and Leona, TX, 139° radials; Leona; to Scurry, TX.

V-556—[Amended]

By removing the words "to Scholes" and by substituting the words "Scholes; to Sabine Pass, TX"

Issued in Washington, D.C., on July 1, 1986.

Daniel J. Peterson,

Manager, Airspace-Rules and Aeronautical Information Division.

[FR Doc. 86-15358 Filed 7-8-86; 8:45 am]

BILLING CODE 4910-13-M

DEPARTMENT OF THE TREASURY

Customs Service

19 CFR Part 134

[T.D. 86-129]

Country of Origin Marking Requirements for Imported Footwear

AGENCY: U.S. Customs Service, Department of the Treasury.

ACTION: Policy Statement.

SUMMARY: This document gives notice that § 134.46, Customs Regulations (19 CFR 134.46), which imposes specific country of origin marking requirements in instances where the full or abbreviated name of a country or locality other than the country of origin appears on an imported article or its container, applies *whenever* the full or abbreviated name of a country or locality other than the country of origin appears anywhere on imported footwear or the footwear container (shoe box) regardless of the context in which the name or locality is used. The notice is being published to provide for uniform application of § 134.46 as it pertains to imported footwear.

DATE: This policy shall be effective as to merchandise entered or withdrawn from warehouse for consumption on or after August 1, 1986 (in the case of footwear boxes) and October 1, 1986 (in the case of footwear).

FOR FURTHER INFORMATION CONTACT: Lorrie Rodbart, Entry Procedures and Penalties Division, U.S. Customs Service, 1301 Constitution Avenue, NW., Washington, DC 20229 (202-566-5765).

SUPPLEMENTARY INFORMATION:

Background

Section 304(a), Tariff Act of 1930, as amended (19 U.S.C. 1304(a)), provides that every imported article of foreign origin, or its container, shall be legibly and conspicuously marked to indicate to an ultimate purchaser in the United States the English name of the country of origin of the article. Part 134, Customs Regulations (19 CFR Part 134), sets forth the regulations implementing the country of origin marking requirements of 19 U.S.C. 1304(a).

Section 134.46, Customs Regulations (19 CFR 134.46), provides that *in any case* in which the words "United States," or "American," the letters "U.S.A.," any variation of such words or letters, or the name of any city or locality in the United States, or the name of any foreign country or locality other than the country or locality in which the article was manufactured or produced, appear on an imported article or its container, there shall appear, legibly and permanently, in close proximity to such words, letters or name, and in at least a comparable size, the name of the country of origin preceded by "Made in," "Product of," or other words of similar meaning (emphasis added).

Imported Footwear and Boxes

Some questions have recently arisen concerning the applicability of § 134.46 in instances where the name of a country or locality other than the country of origin appears on imported footwear or its container (shoe box) in the context of size references and patent notices, *e.g.* U.S. Pat. No. —". Whether or not a potential purchaser would be mislead by such references would depend in large part on the sophistication of the potential purchaser and the degree of scrutiny the purchaser performs to determine the country of origin of the article. We believe that a definitive rule is necessary to ensure that all ultimate purchasers are properly informed of the country of origin and to provide for uniformity of application of the country of origin marking requirements of 19 U.S.C. 1304, and § 134.46, Customs Regulations.

Policy

1. On or after August 1, 1986, no shoe box will be treated as properly marked if the full or abbreviated name of a country or locality other than the country of origin appears anywhere on the shoe box *in any context* (including, but not limited to, a size reference) and the requirements of § 134.46, Customs Regulations, are not satisfied. To satisfy the close proximity requirement, the country of origin preceded by the words "Made in" or "Product of" must appear near to and on the same panel as the name of the country or locality other than the country of origin. If the name of the country or locality other than the country of origin appears on a side or top panel of the shoe box, marking the bottom of the box will not be acceptable.

2. On or after October 1, 1986, no importations of footwear will be treated as properly marked if the full or abbreviated name of a country or locality other than the country of origin appears anywhere on the shoe in any context (including, but not limited to, a size reference or patent notice) and the requirements of the § 134.46, Customs Regulations, are not satisfied.

3. Such country of origin marking must be legible, conspicuous, and permanent so that it can be read without strain by a purchaser.

Authority

This notice is being published in accordance with section 304, Tariff Act of 1930, as amended (19 U.S.C. 1304), and Part 134, Customs Regulations (19 CFR Part 134).

William von Raab,

Commissioner of Customs.

Approved:

Francis A. Keating,

Assistant Secretary of the Treasury.

June 26, 1986.

[FR Doc. 86-15433 Filed 7-8-86; 8:45 am]

BILLING CODE 4820-02-M

DEPARTMENT OF HEALTH AND HUMAN SERVICES

Food and Drug Administration

21 CFR Part 73

[Docket No. 85C-0532]

Iron Oxides, Chromium Oxide Greens, and Titanium Dioxide; Listing of Color Additives for Coloring Contact Lenses

AGENCY: Food and Drug Administration.

ACTION: Final rule.

SUMMARY: The Food and Drug Administration (FDA) is amending the color additive regulations to provide for the safe use of iron oxides, chromium oxide greens, and titanium dioxide as color additives in contact lenses. This action responds to a petition filed by Wesley-Jessen.

DATES: Effective August 9, 1986. Except as to any provisions that may be stayed by the filing of proper objections; objections by August 8, 1986.

ADDRESS: Written objections to the Dockets Management Branch (HFA-305), Food and Drug Administation, Rm. 4-62, 5600 Fishers Lane, Rockville, MD 20857.

FOR FURTHER INFORMATION CONTACT: Julius Smith, Center For Food Safety and Applied Nutrition (HFF-335), Food and Drug Administration, 200 C St. SW., Washington, DC 20204, 202-472-5690.

SUPPLEMENTARY INFORMATION:

I. Introduction

In a notice published in the **Federal Register** of December 9, 1985 (50 FR 50234), FDA announced that a color additive petition (CAP 5C0193) had been filed by Wesley-Jessen, 400 West Superior St., Chicago, IL 60610, proposing that the color additive regulations be amended to provide for the safe use of iron oxides, chromium oxide greens, and titanium dioxide as color additives in contact lenses. The petition was filed under section 706 of the Federal Food, Drug, and Cosmetic Act (the act) (21 U.S.C. 376).

II. Applicability of the Act

With the passage of the Medical Device Amendments of 1976 to the act (Pub. L. 94-295), Congress mandated the listing of color additives for use in medical devices when the color additive comes in direct contact with the body for a significant period of time (21 U.S.C. 376(a)). The use of iron oxides, chromium oxide greens, and titanium dioxide as color additives in contact lenses is subject to regulation under the act. The color additives are added to contact lenses in such a way that at least some of the color additives will come in contact with the eye when the lenses are worn. In addition, the lenses are intended to be placed on the eye for several hours a day, each day, for 1 year or more. Thus, the color additives will be in direct contact with the body for a significant period of time. Consequently, the use of the color additives currently before the agency is subject to the statutory listing requirement.

III. Safety Evaluation

To establish that the color additives chromium oxide greens, iron oxides, and titanium dioxide are safe for use in coloring contact lenses, the petitioner conducted and submitted cytotoxicity studies of tinted lens materials using an agar monolayer of L-929 mouse fibroblast cells. No adverse effects were found in these cytotoxicity studies.

Additionally, FDA considered other data on these color additives that are in the agency's files in its review. In acute eye irritation studies in which chromium oxide greens and iron oxide were applied to the eyes of rabbits, no abnormal corneal effects were observed. Also, in ocular studies in which titanium dioxide was implanted in the corneas of rabbits and in humans, no deleterious effects were reported.

The agency also calculated the upper limit of exposure to iron oxide to be 280 nanograms per day; to chromium oxide greens to be 330 nanograms per day; and to titanium dioxide to be 270 nanograms per day. These upper limits were based on two factors. First, based on the information submitted by the petitioner, FDA estimated that the maximum use level of the color additive is 50 micrograms per lens. See, Memorandum of February 19, 1985, from Food Additive Chemistry Evaluation Branch to Petitions Control Branch, Re: Color Additives in Contact Lenses, which is on file in the Dockets Management Branch (address above) under the docket number appearing in the heading of this document and is available for public review between 9 a.m. and 4 p.m., Monday through Friday. Second, the agency made two worst-case assumptions: (1) That the user will replace lenses tinted with the color additive once each year with a new pair of lenses tinted with the color additive at the maximum use level; and (2) that 100 percent of the color additives will migrate from the lenses into the eye over the 1-year period. Because these assumptions are worst-case estimates, exposure to these color additives from their use for coloring contact lenses is likely to be far less than the calculated exposure of 280 nanograms per day for iron oxides, 330 nanograms per day for chromium oxide greens, and 270 nanograms per day for titanium dioxide. In the case of these color additives, no cytotoxic effects were observed at concentrations many times greater than those that would be in the eyes if these maximum levels of the color additives migrated into the eyes per day.

IV. Certification Considerations

Based on its review of relevant data, FDA concludes that the safety margin for use of these color additives is large enough to rule out any need for imposing a limitation on the amount of the additive that may be present in the lenses, beyond the limitation that only that amount necessary to accomplish the intended technical effect may be used. Also, based on its consideration of the factors listed in § 71.20(b) (21 CFR 71.20(b)), the agency concludes that certification of the color additives listed in this final rule is not necessary for the protection of the public health.

V. Conclusion

Based on the data in the petition, FDA's review of safety data in its file on currently regulated uses of those color additives, and other relevant material, FDA concludes that there is a reasonable certainty that no harm will result from the proposed use of iron oxides, chromium oxide greens, and titanium dioxide for coloring contact lenses, and that these color additives are safe and suitable for their intended use.

VI. Inspection of Documents

In accordance with § 71.15 (21 CFR 71.15), the petition and the documents that FDA considered and relied upon in reaching its decision to approve the use of these color additives in contact lenses are available for inspection at the Center for Food Safety and Applied Nutrition (address above) by appointment with the information contact person listed above. As provided in 21 CFR 71.15, the agency will delete from the documents any materials that are not available for public disclosure before making the documents available for inspection.

VII. Environmental Assessment

The agency has carefully considered the potential environmental effects of this action and has concluded that the action will not have a significant impact on the human environment and that an environmental impact statement is not required. The agency's finding of no significant impact and the evidence supporting that finding may be seen in

the Dockets Management Branch (address above) between 9 a.m. and 4 p.m., Monday through Friday. FDA's regulations implementing the National Environmental Policy Act (21 CFR Part 25) have been replaced by a rule published in the **Federal Register** of April 26, 1985 (50 FR 16636, effective July 25, 1985). Under the new rule, an action of this type would require an environmental assessment under 21 CFR 25.31a(a).

VIII. Objections

Any person who will be adversely affected by this regulation may at any time on or before August 8, 1986, file with the Dockets Management Branch (address above) written objections thereto. Each objection shall be separately numbered, and each numbered objection shall specify with particularly the provisions of the regulation to which objection is made and the grounds for the objection. Each numbered objection on which a hearing is requested shall specifically so state. Failure to request a hearing for any particular objection shall constitute a waiver of the right to a hearing on that objection. Each numbered objection for which a hearing is requested shall include a detailed description and analysis of the specific factual information intended to be presented in support of the objection in the event that a hearing is held. Failure to include such a description and analysis for any particular objection shall constitute a waiver of the right to a hearing on the objection. Three copies of all documents shall be submitted and shall be identified with the document number found in brackets in the heading of this document. Any objections received in response to the regulation may be seen in the Dockets Management Branch between 9 a.m. and 4 p.m., Monday through Friday. FDA will publish notice of the objections that the agency has received or lack thereof in the **Federal Register.**

List of Subjects in 21 CFR Part 73

Color additives, Cosmetics, Drugs, Medical devices.

Therefore, under the Federal Food, Drug, and Cosmetic Act and under authority delegated to the Commissioner of Food and Drugs, Part 73 is amended as follows:

PART 73—LISTING OF COLOR ADDITIVES EXEMPT FROM CERTIFICATION

1. The authority citation for 21 CFR Part 73 continues to read as follows:

Authority: Secs. 701, 706, 52 Stat. 1055—1056 as amended, 74 Stat. 399–407 as amended (21 U.S.C. 371, 376); 21 CFR 5.10.

2. By adding new §§ 73.3111, 73.3125, and 73.3126 to Subpart D, to read as follows:

§ 73.3111 Chromium oxide greens.

(a) *Identity and specifications.* The color additive chromium oxide greens (chromic oxide) (CAS Reg. No. 1308–38–9), Color Index No. 77288, shall conform in identity and specifications to the requirements of § 73.1327 (a)(1) and (b).

(b) *Uses and restrictions.* (1) The substance listed in paragraph (a) of this section may be used as a color additive in contact lenses in amounts not to exceed the minimum reasonably required to accomplish the intended coloring effect.

(2) Authorization and compliance with this use shall not be construed as waiving any of the requirements of sections 510(k), 515, and 520(g) of the Federal Food, Drug, and Cosmetic Act with respect to the contact lenses in which the additive is used.

(c) *Labeling.* The label of the color additive shall conform to the requirements of § 70.25 of this chapter.

(d) *Exemption from certification.* Certification of this color additive is not necessary for the protection of the public health, and therefore the color additive is exempt from the certification requirements of section 706(c) of the act.

§ 73.3125 Iron oxides.

(a) *Identity and specifications.* The color additive iron oxides (CAS Reg. No. 977053–38–5), Color Index No. 77491, shall conform in identity and specifications to the requirements of § 73.2250 (a) and (b).

(b) *Uses and restrictions.* (1) The substance listed in paragraph (a) of this section may be used as a color additive in contact lenses in amounts not to exceed the minimum reasonably required to accomplish the intended coloring effect.

(2) Authorization and compliance with this use shall not be construed as waiving any of the requirements of sections 510(k), 515, and 520(g) of the Federal Food, Drug, and Cosmetic Act with respect to the contact lens in which the additive is used.

(c) *Labeling.* The label of the color additive shall conform to the requirements of § 70.25 of this chapter.

(d) *Exemption from certification.* Certification of this color additive is not necessary for the protection of the public health, and therefore the color additive is exempt from the certification requirements of section 706(c) of the act.

§ 73.3126 Titanium dioxide.

(a) *Identity and specifications.* The color additive titanium dioxide (CAS Reg. No. 13463–67–7), Color Index No. 77891, shall conform in identity and specifications to the requirements of § 73.575(a)(1) and (b).

(b) *Uses and restrictions.* (1) The substance listed in paragraph (a) of this section may be used as a color additive in contact lenses in amounts not to exceed the minimum reasonably required to accomplish the intended coloring effect.

(2) Authorization and compliance with this use shall not be construed as waiving any of the requirements of sections 510(k), 515, and 520(g) of the Federal Food, Drug, and Cosmetic Act with respect to the contact lenses in which the additive is used.

(c) *Labeling.* The label of the color additive shall conform to the requirements of § 70.25 of this chapter.

(d) *Exemption from certification.* Certification of this color additive is not necessary for the protection of the public health, and therefore the color additive is exempt from the certification requirements of section 706(c) of the act.

Dated: June 23, 1986.

John M. Taylor,
Acting Associate Commissioner for Regulatory Affairs.

[FR Doc. 86–15392 Filed 7–8–86; 8:45 am]
BILLING CODE 4160–01–M

FEDERAL MEDIATION AND CONCILIATION SERVICE

29 CFR Part 1450

Debt Collection

AGENCY: Federal Mediation and Conciliation Service.

ACTION: Final rule.

SUMMARY: This final rule establishes the procedures of the Federal Mediation and Conciliation Service (FMCS) for the collection of debts owed to the United States. This rule is promulgated in order to implement the provisions of the Debt Collection Act of 1982 (Pub. L. 97–365).

EFFECTIVE DATE: July 18, 1986.

FOR FURTHER INFORMATION CONTACT: Ted Chaskelson, Legal Services Office, Federal Mediation and Conciliation Service, 2100 K Street NW., Washington, DC 20427 (202 653–5305).

SUPPLEMENTARY INFORMATION: The Debt Collection Act of 1982 (Pub. L. 97–365) authorizes new procedures for the collection of debts owed to the United

States, including (1) disclosure of information to consumer reporting agencies; (2) contracting for collection services to recover debts; (3) administrative offset; and (4) salary offset. Pursuant to this Act, the FMCS published in the **Federal Register** its proposed rule for the collection of debts owed to the United States (50 FR 52944, December 27, 1985).

No comments were received by the required date of February 7, 1986. In order, however, to conform to the requirements contained in Office of Management and Budget (OMB) and Office of Personnel Management (OPM) publications, the following changes have been made.

(1) Pursuant to OMB Memorandum of July 22, 1983, the definition of "consumer reporting agency" at § 1450.16(a) has been modified to include the definition stated at 15 U.S.C. 1681a(f).

(2) Pursuant to OPM proposed amendment (50 FR 18267, April 30, 1985) the words "Executive Agencies" at § 1450.19(a) have been deleted and replaced by the word "agencies"; the words "Executive Agency" at § 1450.20 have been deleted and replaced by the word "agency"; and the definition of "Agency" at § 1450.20 has been modified as follows: "Agency" means the Federal Mediation and Conciliation Service (FMCS) or means any other agency of the U.S. Government as defined by section 105 of Title 5 U.S.C., including the U.S. Postal Service and the U.S. Postal Rate Commission, a military department as defined by section 102 of Title 5 U.S.C., an agency or court of the judicial branch, and an agency of the legislative branch including the U.S. Senate and the U.S. House of Representatives. The definition of "agency" at § 1450.1 has been modified to refer to the definition at § 1450.20.

(3) Pursuant to OPM proposed amendment (50 FR 18267, April 30, 1985) § 1450.28(a)(3) has been modified by deleting the last three sentences, as this material, as noted by OPM, is extraneous.

(4) Pursuant to OPM proposed amendment (at 50 FR 48421, November 25, 1985) all other language in § 1450.28 has been deleted, and has been replaced by a new text. As noted by OPM, the new text for § 1450.28 segregates the responsibilities of the creditor and paying agencies into separate paragraphs, eliminates the need for a debt claim form specified by OPM, and eliminates the requirement that a copy of the creditor agency's certification of the debt be included in the paying agency's notification to the debtor.

(5) Section 1450.19 has also been amended by adding a paragraph (c) stating the time limit for debt collection by salary offset as follows:

Time Limit

Under 4 CFR 102.3(b)(3), offset may not be initiated to collect a debt more than 10 years after the Government's right to collect the debt first accrued, unless an exception is applicable as stated in § 102.3(b)(3).

(6) A new § 1450.31 has been added providing that the assessment of interest, penalties and administrative costs not intended to be exclusive sanctions, as follows:

Other Sanctions

The sanctions stated in this subpart are not intended to be exclusive. Other sanctions which may be imposed by the Director of FMCS include placement of the debtor's name on a list of debarred, suspended or ineligible contractors or grantees; conversion of method of payment under a grant from an advance payment method to a reimbursement method; or revocation of a letter of credit. Notice will be given by FMCS to the debtor regarding the imposition of such other sanctions.

Finally, a number of grammatical and typographical errors have been corrected. None of these corrections, however, affect the meaning of the regulation.

Executive Order 12291

This final rule is not a "major rule" under Executive Order 12291 because it is not likely to result in (1) an annual effect on the economy of $100 million or more; (2) a major increase in costs or prices for consumers, individual industries, Federal, State, or local government agencies, or geographic regions; or (3) significant adverse effects on competition, employment, investment, productivity, innovation, or on the ability of United States-based enterprises to compete with foreign-based enterprises in domestic or export markets. Accordingly, no regulatory impact analysis is required.

Regulatory Flexibility Act

The FMCS finds that this final rule will have no "significant economic impact upon a substantial number of small entities" within the meaning of section 3(a) of the Regulatory Flexibility Act, Pub. L. 96–354, 94 Stat. 1164 (5 U.S.C. 605(b)). The FMCS has so certified to the Chief Counsel for Advocacy of the Small Business Administration. This conclusion has been reached because the proposed rule does not, in itself, impose any additional requirements upon small entities. Accordingly, no regulatory flexibility analysis is required.

Paperwork Reduction Act

In accordance with the Paperwork Reduction Act of 1980 (Pub. L. 96–511), any reporting recordkeeping provisions that are included in this rule will be submitted for approval to the Office of Management and Budget (OMB).

List of Subjects in 29 CFR Part 1450

Claims, Debts, Government Employees, Administrative practice and procedure.

Accordingly, 29 CFR is amended by adding Part 1450 to read as follows:

PART 1450—COLLECTIONS OF CLAIMS OWED THE UNITED STATES

Subpart A—General Provisions

Sec.
1450.1 Definitions.
1450.2 Exceptions.
1450.3 Use of procedures.
1450.4 Conformance to law and regulations.
1450.5 Other procedures.
1450.6 Informal action.
1450.7 Return of property.
1450.8 Omissions not a defense.

Subpart B—Administrative Offset—Consumer Reporting Agencies—Contracting for Collection

1450.9 Demand for payment.
1450.10 Collection by administrative offset.
1450.11 Administrative offset against amounts payable from Civil Services Retirement and Disability Fund.
1450.12 Collection in installments.
1450.13 Exploration of compromise.
1450.14 Suspending or terminating collection action.
1450.15 Referrals to the Department of Justice or the General Accounting Office.
1450.16 Use of Consumer Reporting Agencies.
1450.17 Contracting for collection services.

Subpart C—Salary Offset

1450.18 Purpose.
1450.19 Scope.
1450.20 Definitions.
1450.21 Notification.
1450.22 Hearing.
1450.23 Deduction from pay.
1450.24 Liquidation from final check or recovery from other payment.
1450.25 Non-Waiver of rights by payments.
1450.26 Refunds.
1450.27 Interest, penalties and administrative costs.
1450.28 Recovery when paying agency is not creditor agency.

Subpart D—Interest, Penalities, and Administrative Costs

1450.29 Assessment.
1450.30 Exemptions.
1450.31 Other sanctions.

Authority: 31 U.S.C. 3701–3719; 5 U.S.C. 5514; 4 CFR Parts 101–105; 5 CFR Part 550.

Subpart A—General Provisions

§ 1450.1 Definitions.

(a) The term "agency" means the Federal Mediation and Conciliation Service (FMCS) or any other agency of the U.S. Government as stated at § 1450.20.

(b) The term "agency head" means the Director of the Federal Mediation and Conciliation Service.

(c) The terms "appropriate agency official" or "designee" mean the Director of the Financial Management Staff of FMCS, or such other official as may be named in the future by the Director of FMCS.

(d) The terms "claim" and "debt" are deemed synonymous and interchangeable. They refer to an amount of money or property which has been determined by an appropriate agency official to be owed to the United States from any person, organization or entity, except another Federal agency.

(e) A debt is considered "delinquent" if it has not been paid by the date specified in the agency's written notification or applicable contractual agreement, unless other satisfactory payment arrangements have been made by that date, or if at any time thereafter the debtor fails to satisfy obligations under a payment agreement with the agency.

(f) the term "referral for litigation" means referral to the Department of justice for appropriate legal proceedings.

§ 1450.2 Exceptions.

(a) Claims arising from the audit of transportation accounts pursuant to 31 U.S.C. 3726 shall be determined, collected, compromised, terminated or settled in accordance with regulations published under the authority of 31 U.S.C. 3726 (see 41 CFR parts 101–41).

(b) Claims arising out of acquisition contracts subject to the Federal Acquisition Regulations (FAR) shall be determined, collected, compromised, terminated, or settled in accordance with those regulations. (See 48 CFR Part 32). If not otherwise provided for in the FAR system, contract claims that have been the subject of a contracting officer's final decision in accordance with section 6(a) of the Contract Disputes Act of 1978 (41 U.S.C. 605)(a)), may be determined, collected, compromised, terminated or settled under the provisions of this regulation, except that no additional review of the debt shall be granted beyond that provided by the contracting officer in accordance with the provisions of section 6 of the Contract Disputes Act of 1978 (41 U.S.C. 605), and the amount of any interest, administrative charge, or penalty charge shall be subject to the limitations, if any, contained in the contract out of which the claim arose.

(c) Claims based in whole or in part on conduct in violation of the antitrust laws, or in regard to which there is an indication of fraud, presentation of a false claim, or misrepresentation on the part of the debtor or any other party having an interest in the claim, shall be referred to the Department of Justice (DOJ) as only the DOJ has authority to compromise, suspend, or terminate collection action on such claims.

(d) Tax claims are also excluded from the coverage of this regulation.

§ 1450.3 Use of procedures.

Procedures authorized by this regulation (including, but not limited to, disclosure to a consumer reporting agency, contracting for collection services, administrative offset and salary offset) may be used singly or in combination, so long as the requirements of applicable law and regulation are satisfied.

§ 1450.4 Conformance to law and regulations.

The requirements of applicable law (31 U.S.C 3701–3719 and 5 U.S.C. 5514 as amended by Pub. L. 97–365, 96 Stat. 1749) have been implemented in Governmentwide standards:

(a) The Regulations of the Office of Personnel Management (5 CFR Part 550),

(b) The Federal Claims Collection Standards issued jointly by the General Accounting Office and the Department of Justice (4 CFR Parts 101–105), and

(c) The procedures prescribed by the Office of Management and Budget in Circular A–129 of May 9, 1985.

Not every item in the above described standards has been incorporated or referenced in this regulation. To the extent, however, that circumstances arise which are not covered by the terms stated in this regulation, FMCS will proceed in any actions taken in accordance with applicable requirements found in the sources referred to in paragraphs (a), (b), and (c) of this section.

§ 1450.5 Other procedures.

Nothing contained in this regulation is intended to require FMCS to duplicate administrative proceedings required by contract or other laws or regulations.

§ 1450.6 Informal action.

Nothing contained in this regulation is intended to preclude utilization of informal administrative actions or remedies which may be available.

§ 1450.7 Return of property.

Nothing contained in this regulation is intended to deter FMCS from demanding the return of specific property or from demanding, the return of the property or the payment of its value.

§ 1450.8 Omissions not a defense.

The failure of FMCS to comply with any provision in this regulation shall not serve as a defense to the debt.

Subpart B—Administrative Offset—Consumer Reporting Agencies—Contracting for Collection

§ 1450.9 Demand for payment.

Prior to making an administrative offset, demand for payment will be made as stated below:

(a) Written demands shall be made promptly upon a debtor in terms which inform the debtor of the consequences of failure to cooperate. A total of three progressively stronger written demands at not more than 30-day intervals will normally be made unless a response to the first or second demand indicates that a further demand would be futile and the debtor's response does not require rebuttal. In determining the timing of demand letters, FMCS will give due regard to the need to act promptly so that, as a general rule, if necessary to refer the debt to the Department of Justice for litigation, such referral can be made within one year of the agency's final determination of the fact and the amount of the debt. When necessary to protect the Government's interest (for example, to prevent the statute of limitations, 28 U.S.C. 2415, from expiring), written demand may be preceded by other appropriate actions under this subpart including immediate referral for litigation.

(b) The initial demand letter will inform the debtor of:

(1) The basis for the indebtedness and the right of the debtor to request review within the agency;

(2) The applicable standards for assessing interest, penalties, and administrative costs (Subpart D of this regulation) and

(3) The date by which payment is to be made, which normally should be not more than 30 days from the date that the initial demand letter was mailed or hand-delivered. FMCS will exercise care to insure that demand letters are mailed or hand-delivered on the same day that they are actually dated. Apart from this, there is no prescribed format for the demand letters.

(c) As appropriate to the circumstances, FMCS may include either in the initial demand letter or in

subsequent letters, matters relating to alternative methods of payment, policies with respect to use of consumer reporting agencies and collection services, the agency's intentions with respect to referral of the debt to the Department of Justice for litigation, and, depending on applicable statutory authority, the debtor's entitlement to consideration of waiver.

(d) FMCS will respond promptly to communications from the debtor, within 30 days whenever feasible, and will advise debtor who dispute the debt that they must furnish available evidence to support their contentions.

(e) If, either prior to the initiations of, at any time during, or after completion of the demand cycle, FMCS determines to pursue administrative offset, then the requirements specified in §§ 1450.10 and 1450.11, as applicable, will be met. The availability of funds for offset and the agency determination to purse it release the agency from the necessity of further compliance with paragraphs (a), (b), and (c) of this section. If the agency has not already sent the first demand letter, the agency's written notification of its intent to offset must give the debtor the opportunity to make voluntary payment, a requirement which will be satisfied by compliance with the notice requirements of §§ 1450.10 and 1450.11 as applicable.

§ 1450.10 Collection by administrative offset.

(a) Collection by administrative offset will be undertaken in accordance with these regulations on all claims which are liquidated or certain in amount, in every instance in which such collection is determined to be feasible and not otherwise prohibited.

(1) For purposes of this section, the term "administrative offset" is the same as stated in 31 U.S.C. 3716(a)(1).

(2) Whether collection by administrative offset is feasible is a determination to be made by the agency on a case-by-case basis, in the exercise of sound discretion. FMCS will consider not only whether administrative offset can be accomplished practically, but also whether offset is best suited to further and protect all of the Government's interests. In appropriate circumstances, FMCS may give due consideration to the debtor's financial condition and is not required to use offset in every instance in which there is an available source of funds. FMCS may also consider whether offset would tend to substantially interfere with or defeat the purposes of the program authorizing the payments against which offset is contemplated. For example, under a grant program in which payments are made in advance of the grantee's performance, offset will normally be inappropriate. This concept generally does not apply, however, where payment is in the form of reimbursement.

(b) Before the offset is made, a debtor shall be provided with the following: written notice of the nature and amount of the debt, and the agency's intention to collect by offset; opportunity to inspect and copy agency records pertaining to the debt; opportunity to obtain review within the agency of the determination of indebtedness; and opportunity to enter into a written agreement with the agency to repay the debt. FMCS may also make requests for offset to other agencies holding funds payable to the debtor, and process requests for offset that are received from other agencies.

(1) FMCS will exercise sound judgment in determining whether to accept a repayment agreement in lieu of offset. The determination will weigh the Government's interest in collecting the debt against fairness to the debtor. If the debt is delinquent and the debtor has not disputed its existence or amount, FMCS will normally accept a repayment agreement in lieu of offset only if the debtor is able to establish that offset would result in undue financial hardship or would be against equity and good conscience.

(2) In cases where the procedural requirements specified in paragraph (b) of this section have previously been provided to the debtor in connection with the same debt under § 1450.9, or some other regulatory or statutory authority, such as pursuant to a notice of audit allowance, the agency is not required to duplicate those requirements before taking administrative offset.

(3) FMCS may not initiate administrative offset to collect a debt under 31 U.S.C. 3716 more than 10 years after the Government's right to collect the debt first accrued, unless facts material to the Government's right to collect the debt were not known and could not reasonably have been known by the official or officials of the Government who were charged with the responsibility to discover and collect such debts. When the debt first accrued is to be determined according to existing law, regarding the accrual of debts, such as 28 U.S.C. 2415.

(4) FMCS is not authorized by 31 U.S.C. 3716 to use administrative offset with respect to:

(i) Debts owed by any State or local Governments;

(ii) Debts arising under or payments made under the Social Security Act, the Internal Revenue Code of 1954, or the tariff laws of the United States; or

(iii) Any case in which collection of the type of debt involved by administrative offset is explicitly provided for or prohibited by another statute. However, unless otherwise provided by contract or law, debts or payments which are not subject to administrative offset under 31 U.S.C. 3716 may be collected by administrative offset under the common law or other applicable statutory authority.

(5) FMCS may effect administrative offset against a payment to be made to a debtor prior to completion of the procedures required by paragraph (b) of this section if:

(i) Failure to take the offset would substantially prejudice the Government's ability to collect the debt, and

(ii) The time before the payment is to be made does not reasonably permit the completion of those procedures.

Such prior offset must be promptly followed by the completion of those procedures. Amounts recovered by offset but later found not to be owed to the Government shall be promptly refunded.

(6) FMCS will obtain credit reports on delinquent accounts to identify opportunities for administrative offset of amounts due to a delinquent debtor when other collection techniques have been unsuccessful.

(c) Type of hearing or review:

(1) For purposes of this section, whenever FMCS is required to provide a hearing or review within the agency, the agency shall provide the debtor with a reasonable opportunity for an oral hearing when:

(i) An applicable statute authorizes or requires the agency to consider waiver of the indebtedness involved, the debtor requests waiver of the indebtedness, and the waiver determination turns on an issue of credibility or veracity; or

(ii) The debtor requests reconsideration of the debt and the agency determines that the question of the indebtedness cannot be resolved by review of the documentary evidence, for example, when the validity of the debt turns on an issue of credibility or veracity.

Unless otherwise required by law, an oral hearing under this section is not required to be a formal evidentiary-type hearing, although the FMCS will carefully document all significant matters discussed at the hearing.

(2) This section does not require an oral hearing with respect to debt collection systems in which determinations of indebtedness or waiver rarely involve issues of credibility or veracity and the agency has determined that review of the

written record is ordinarily an adequate means to correct prior mistakes. In administering such a system, the agency is not required to sift through all of the requests received in order to accord oral hearings in those few cases which may involve issues of credibility or veracity.

(3) In those cases where an oral hearing is not required by this section, the agency will make its determination on the request for waiver or reconsideration based upon a "paper hearing" that is, a review of the written record.

(d) Appropriate use will be made of the cooperative efforts of other agencies in effecting collection by administrative offset. Generally, FMCS will not refuse to comply with requests from other agencies to initiate administrative offset to collect debts owed to the United States, unless the requesting agency has not complied with the applicable provisions of these standards or the offset would be otherwise contrary to law.

(e) Collection by offset against a judgment obtained by a debtor against the United States shall be accomplished in accordance with 31 U.S.C. 3728.

(f) Whenever the creditor agency is not the agency which is responsible for making the payment against which administrative offset is sought, the latter agency shall not initiate the requested offset until it has been provided by the creditor agency with an appropriate written certification that the debtor owes a debt (including the amount) and that full compliance with the provisions of this section has taken place.

(g) When collecting multiple debts by administrative offset, FMCS will apply the recovered amounts to those debts in accordance with the best interests of the United States, as determined by the facts and circumstances of the particular case, paying special attention to applicable statutes of limitations.

§ 1450.11 Administrative offset against amounts payable from Civil Service Retirement and Disability Fund.

(a) Unless otherwise prohibited by law, FMCS may request that moneys which are due and payable to a debtor from the Civil Service Retirement and Disability Fund be administratively offset in reasonable amounts in order to collect in one full payment, or a minimal number of payments, debts owed to the United States by the debtor. Such requests shall be made to the appropriate officials of the Office of Personnel Management in accordance with such regulations as may be prescribed by the Director of that Office.

(b) When making a request for administrative offset under paragraph (a) of this section, FMCS shall include a written certification that:

(1) The debtor owes the United States a debt, including the amount of the debt;

(2) The FMCS has complied with the applicable statutes, regulations, and procedures of the Office of Personnel Management; and

(3) The FMCS has complied with the requirements of § 1450.10 of this subpart, including any required hearing or review.

(c) Once FMCS decides to request adminstrative offset under paragraph (a) of this section, it will make the request as soon as practical after completion of the applicable procedures in order that the Office of Personnel Management may identify and "flag" the debtor's account in anticipation of the time when the debtor requests or become eligible to receive payments from the Fund. This will satisfy any requirement that offset be initiated prior to expiration of the applicable statute of limitations. At such time as the debtor makes a claim for payments from the Fund, if at least a year has elapsed since the offset request was originally made, the debtor should be permitted to offer a satisfactory payment plan in lieu of offset upon establishing that changed financial circumstances would render the offset unjust.

(d) If FMCS collects part or all of the debt by other means before deductions are made or completed pursuant to paragraph (a) of this section, FMCS shall act promptly to modify or terminate its request for offset under paragraph (a) of this section.

(e) This section does not require or authorize the Office of Personnel Management to review the merits of the FMCS determination with respect to the amount and validity of the debt, its determination as to waiver under an applicable statute, or its determination to provide or not provide a hearing.

§ 1450.12 Collection in installments.

(a) Whenever feasible, and except as otherwise provided by law, debts owed to the United States, together with interest, penalties, and administrative costs as required by this regulation should be collected in full in one lump sum. This is true whether the debt is being collected by administrative offset or by another method, including voluntary payment. However, if the debtor is financially unable to pay the indebtedness in one lump sum, payment may be accepted in regular installments. FMCS will obtain financial statements from debtors who represent that they are unable to pay the debt in one lump sum. If FMCS agrees to accept payment in regular installments it will obtain a legally enforceable written agreement from the debtor which specifies all of the terms of the arrangement and which contains a provision accelerating the debt in the event the debtor defaults. The size and frequency of installment payments should bear a reasonable relation to the size of the debt and the debtor's ability to pay. If possible, the installment payments should be sufficient in size and frequency to liquidate the Government's claim in not more than 3 years. Installment payments of less than $50 per month will be accepted only if justifiable on the grounds of financial hardship or some other reasonable cause.

(b) If the debtor owes more than one debt and designates how a voluntary installment payment is to be applied as among those debts, that designation must be followed. If the debtor does not designate the application of the payment, FMCS will apply payments to various debts in accordance with the best interests of the United States, as determined by the facts and circumstances of the particular case, paying special attention to applicable statutes of limitations.

§ 1450.13 Exploration of compromise.

FMCS may attempt to effect compromise, preferably during the course of personal interviews, in accordance with the standards set forth in Part 103 of the Federal Claims Collection Standards (4 CFR Part 103).

§ 1450.14 Suspending or termination collection action.

The suspension or termination of collection action shall be made in accordance with the standards set forth in Part 104 of the Federal Claims Collection Standards (4 CFR Part 104).

§ 1450.15 Referrals to the Department of Justice or the General Accounting Office.

Referrals to the Department of Justice or the General Accounting Office shall be made in accordance with the standards set forth in Part 105 of the Federal Claims Collection Standards (4 CFR Part 105).

§ 1450.16 Use of consumer reporting agencies.

(a) The term "individual" means a natural person, and the term "consumer reporting agency" has the meaning provided in the Federal Claims Collection Act, as amended, at 31 U.S.C. 3701(a)(3) or the Fair Credit Reporting Act, at 15 U.S.C. 1681a(f).

(b) FMCS may disclose to a consumer reporting agency, from a system of records, information that an individual is responsible for a claim if—

(1) Notice required by section 5 U.S.C. 552(a)(e)(4) indicates that information in the system may be disclosed to a consumer reporting agency;

(2) The claim has been reviewed and it is decided that the claim is valid and overdue;

(3) FMCS has notified the individual in writing—

(i) That payment of the claim is overdue;

(ii) That, within not less than 60 days after sending the notice, FMCS intends to disclose to a consumer reporting agency that the individual is responsible for that claim;

(iii) Of the specific information to be disclosed to the consumer reporting agency; and

(iv) Of the rights the individual has to a complete explanation of the claim, to dispute information in the records of the agency about the claim, and to administrative appeal or review of the claim; and

(4) The individual has not—

(i) Repaid or agreed to repay the claim under a written repayment plan that the individual has signed and the agency has agreed to; or

(ii) Filed for review of the claim under paragraph (g) of this section;

(c) FMCS will also—

(1) Disclose promptly, to each consumer reporting agency to which the original disclosure was made, a substantial change in the condition or amount of the claim;

(2) Verify or correct promptly information about the claim, on request of a consumer reporting agency for verification of information disclosed; and

(3) Get satisfactory assurances from each consumer reporting agency that they are complying with all laws of the United States related to providing consumer credit information; and assure that

(d) The information disclosed to the consumer reporting agency is limited to—

(1) Information necessary to establish the identity of the individual, including name, address, and taxpayer identification number;

(2) The amount, status, and history of the claim; and

(3) The agency or program under which the claim arose.

(e) All accounts in excess of $100 that have been delinquent more than 31 days will normally be referred to a consumer reporting agency.

(f) Before disclosing information to a consumer reporting agency FMCS shall take reasonable action to locate an individual for whom the head of the agency does not have a current address to send the notice.

(g) Before disclosing information to a consumer reporting agency FMCS shall provide, on request of an individual alleged by the agency to be responsible for the claim, a review of the obligation of the individual including an opportunity for reconsideration of the initial decision on the claim.

(h) Under the same provisions as described above in this section, FMCS may disclose to a credit reporting agency, information relating to a debtor other than a natural person. Such commercial debt accounts are not covered, however, by the Privacy Act.

§ 1450.17 Contracting for collection services.

(a) FMCS has authority to contract for collection services to recover delinquent debts, provided that the following conditions are satisfied;

(1) The authority to resolve disputes, compromise claims, suspend or terminate collection action, and refer the matter for litigation is retained by the agency:

(2) The contractor shall be subject to the Privacy Act of 1974, as amended to the extent specified in 5 U.S.C. 552a(m), and to applicable Federal and State laws and regulations pertaining to debt collection practices, such as the Fair Debt Collection Practices Act, 15 U.S.C. 1692;

(3) The contractor must be required to account strictly for all amounts collected;

(4) The Contractor must agree that uncollectible accounts shall be returned with appropriate documentation to enable FMCS to determine whether to pursue collection through litigation or to terminate collection efforts, and

(5) The contractor must agree to provide any data contained in its files relating to paragraphs (a) (1), (2), and (3) of § 105.2 of the Federal Claims Collection Standards (4 CFR Part 105) upon returning an account to FMCS for subsequent referral to the Department of Justice for litigation.

(b) Funding of collection service contracts:

(1) FMCS may fund a collection service contract on a fixed-fee basis, that is, payment of a fixed fee determined without regard to the amount actually collected under the contract. Payment of the fee under this type of contract must be charged to available agency appropriations.

(2) FMCS may also fund a collection service contract on a contingent-fee basis, that is, by including a provision in the contract permitting the contractor to deduct its fee from amounts collected under the contract. The fee should be based on a percentage of the amount collected, consistent with prevailing commercial practice.

(3) FMCS may enter into a contract under paragraph (b)(1) of this section only if and to the extent provided in advance in its appropriation acts or other legislation, except that this requirement does not apply to the use of a revolving fund authorized by statute.

(4) Except as authorized under paragraph (b)(2) of this section, or unless the receipt qualifies as a refund to the appropriation, or unless otherwise specifically provided by law, FMCS must deposit all amounts recovered under collection service contracts (or by agency employees on behalf of the agency) in the Treasury as miscellaneous receipts pursuant to 31 U.S.C. 3302.

(c) FMCS will consider the use of collection agencies at any time after the account is 61 days past due. In all cases accounts that are six months or more past due shall be turned over to a collection agency unless referred for litigation or unless arrangements have been made for a workout procedure, or the agency has exercised its authority to write off the debt pursuant to § 1450.14.

(d) FMCS will generally not use a collection agency to collect a delinquent debt owed by a currently employed or retired Federal employee, if collection by salary or annuity offset is available.

Subpart C—Salary Offset

§ 1450.18 Purpose.

This subpart provides the standards to be followed by FMCS in implementing 5 U.S.C. 5514 to recover a debt from the pay account of an FMCS employee, and establishes procedural guidelines to recover debts when the employee's creditor and paying agencies are not the same.

§ 1450.19 Scope.

(a) *Coverage.* This subpart applies to agencies and employees as defined by § 1450.20.

(b) *Applicability.* This subpart and 5 U.S.C. 5514 apply in recovering certain debts by offset, except where the employee consents to the recovery, from the current pay account of that employee. Because it is an administrative offset, debt collection procedures for salary offset which are not specified in U.S.C. 5514 and these regulations should be consistent with the provisions of the Federal Claims Collection Standards (4 CFR Parts 101–105).

(1) Excluded debts or claims. The procedures contained in this subpart do not apply to debts or claims arising under the Internal Revenue Code of 1954 as amended (26 U.S.C. 1 et seq.), the Social Security Act (42 U.S.C. 301 et seq.) or the tariff laws of the United States, or to any case where collection of a debt by salary offset is explicitly provided for or prohibited by another statute (e.g., travel advances in 5 U.S.C. 5705 and employee training expenses in 5 U.S.C. 4108).

(2) Waiver requests and claims to the General Accounting Office. This subpart does not preclude an employee from requesting waiver of a salary overpayment under 5 U.S.C. 5584, 10 U.S.C. 2774, or 32 U.S.C. 716, or in any way questioning the amount or validity of a debt by submitting a subsequent claim to the General Accounting Office in accordance with procedures prescribed by the General Accounting Office. Similarly, in the case of other types of debts, it does not preclude an employee from requesting waiver, if waiver is available under any statutory provision pertaining to the particular debt being collected.

(c) *Time limit.* Under 4 CFR 102.3(b)(3), offset may not be initiated more than 10 years after the Government's right to collect the debt first accrued, unless an exception applies as stated in § 102.3(b)(3).

§ 1450.20 Definitions.

For purposes of this subpart—

"Agency" means the Federal Mediation and Conciliation Service (FMCS) or means any other agency of the U.S. Government as defined by section 105 of title 5 U.S.C., including the U.S. Postal Service, and the U.S. Postal Rate Commission, a military department as defined by section 102 of title 5 U.S.C., an agency or court of the judicial branch, and an agency of the legislative branch, including the U.S. Senate and the U.S. House of Representatives.

"Creditor agency" means the agency to which the debt is owed.

"Debt" means an amount owed to the United States from sources which include loans insured or guaranteed by the United States and all other amounts due the United States from fees, leases, rents, royalties, services, sales of real or personal property, overpayments, penalties, damages, interests, fines and forfeitures (except those arising under the Uniform Code Military Justice), and all other similar sources.

"Disposable pay" means that part of current basic pay, special pay, incentive pay, retired pay, retainer pay, or in the case of an employee not entitled to basic pay, other authorized pay remaining after the deduction of any amount required by law to be withheld. FMCS will exclude deductions described in 5 CFR 581.105 (b) through (f) to determine disposable pay subject to salary offset.

"Employee" means a current employee of FMCS or of another agency, including a current member of the Armed Forces or a Reserve of the Armed Forces

"FCCS" means the Federal Claims Collection Standards jointly published by the Justice Department and the General Accounting Office at 4 CFR Parts 101–105.

"Paying agency" means the agency employing the individual and authorizing the payment of his or her current pay.

"Salary offset" means an administrative offset to collect a debt under 5 U.S.C. 5514 by deduction(s) at one or more officially established pay intervals from the current pay account of an employee without his or her consent.

"Waiver" means the cancellation, remission, forgiveness, or non-recovery of a debt allegedly owed by an employee to an agency as permitted or required by 5 U.S.C. 5584, 10 U.S.C. 2774, or 32 U.S.C. 710, 5 U.S.C. 8346(b), or any other law.

§ 1450.21 Notification.

(a) Salary offset deductions shall not be made unless the Director of the Financial Management Staff of FMCS, or such other official as may be named in the future by the Director of FMCS, provides to the employee—at least 30 days before any deduction—a written notice stating at a minimum:

(1) The agency's determination that a debt is owed, including the origin, nature, and amount of the debt;

(2) The agency's intention to collect the debt by means of deduction from the employee's current disposable pay account;

(3) The amount, frequency, proposed beginning date, and duration of the intended deductions;

(4) An explanation of the agency's policy concerning interest, penalties, and administrative costs (Subpart D of this regulation), a statement that such assessment must be made unless excused in accordance with the FCCS;

(5) The employee's right to inspect and copy Government records relating to the debt or, if the employee or his or her representative cannot personnally inspect the records, to request and receive a copy of such records;

(6) If not previously provided, the opportunity (under terms agreeable to the agency) to establish a schedule for the voluntary repayment of the debt or to enter into a written agreement to establish a schedule for repayment of the debt in lieu of offset. The agreement must be writing, signed by both the employee and the Director of the Financial Management Staff of FMCS, and documented in agency files (4 CFR 102.11).

(7) The employee's right to a hearing conducted by an official arranged by the agency (an administrative law judge or alternatively, a hearing official not under the control of the head of the agency) if a petition is filed as prescribed by § 1450.22.

(8) The method and time period for petitioning for a hearing;

(9) That the timely filing of a petition for hearing will stay the commencement of collection proceedings;

(10) That a final decison on the hearing (if one is requested) will be issued at the earliest practical date, but not later than 60 days after the filing of the petition requesting the hearing unless the employee requests and the hearing official grants a delay in the proceedings;

(11) That any knowingly false, misleading, or frivolous statements, representations, or evidence may subject the employee to:

(i) Disciplinary procedures appropriate under chapter 75 of title 5, U.S.C., part 752 of title 5, CFR, or any other applicable status or regulations;

(ii) Penalties under the False Claims Act sections 3729–3731 of title 31, U.S.C., or any other applicable statutory authority; or

(iii) Criminal penalties under sections 286, 287, 1001, and 1002 of title 18, U.S.C., or any other applicable statutory authority.

(12) Any other right and remedies available to the employee under statutes or regulations governing the program for which the collection is being made; and

(13) Unless there are applicable contractual or statutory provisions to the contrary, that amounts paid on or deducted for the debt which are later waived or found not owned to the United States will be promptly refunded to the employee.

(b) Notifications under this section shall be hand delivered with a record made of the date and time of delivery, or shall be mailed by certified mail return receipt requested.

(c) No notification, hearing, written responses or final decisions under this regulation are required of FMCS for any adjustment to pay arising out of an employee's election of coverage under a Federal benefit program requiring periodic deductions from pay, if the

amount to be recovered was accumulated over four pay periods or less.

§ 1450.22 Hearing.

(a) Petition for Hearing.

(1) A hearing may be requested by filing a written petition with the Director, Financial Management Staff of FMCS, or such other official as may be named in the future by the Director of FMCS, stating why the employee believes the determination of the agency concerning the existence or the amount of the debt is in error.

(2) The employee's petition must be signed by the employee and fully identify and explain with reasonable specificity all the facts, evidence and witnesses, if any, which the employee believes support his or her position.

(3) The petition must be filed no later than fifteen (15) calendar days from the date that the notification was hand delivered or the date of delivery by certified mail, return receipt requested.

(4) If a petition is received after the fifteen (15) calendar day deadline referred to above, FMCS will nevertheless accept the petition if the employee can show that the delay was because of circumstances beyond his or her control, or because of failure to receive notice of the time limit (unless otherwise aware of it).

(5) If a petition is not filed within the time limit specified in paragraph (a)(3) of this section, and is not accepted pursuant to paragraph (a)(4) of this section, the employee's right to hearing will be considered waived, and salary offset will be implemented by FMCS.

(b) Type of Hearing. (1) The form and content of the hearing will be determined by the hearing official who shall be a person outside the control or authority of FMCS. In determining the type of hearing, the hearing officer will consider the nature and complexity of the transaction giving rise to the debt. The hearing may be conducted as an informal conference or interview, in which the agency and employee will be given a full opportunity to present their respective positions, or as a more formal proceeding involving the presentation of evidence, arguments and written submissions.

(2) The employee may represent himself or herself, or may be represented by an attorney.

(3) The hearing official shall maintain a summary record of the hearing.

(4) The decision of the hearing officer will be in writing, and will state:

(i) The facts purported to evidence the nature and origin of the alleged debt;

(ii) The hearing official's analysis, findings, and conclusions, in the light of the hearing, as to—

(A) The employee's and/or agency's grounds,

(B) The amount and validity of the alleged debt and,

(C) The repayment schedule, if applicable.

(5) The decision of the hearing official shall constitute the final administrative decision of the agency.

§ 1450.23 Deduction from pay.

(a) Deduction by salary offset, from an employee's current disposable pay, shall be subject to the following conditions:

(1) Ordinarily, debts to the United States should be collected in full, in one lump-sum. This will be done when funds are available. However, if funds are unavailable for payment in one lump sum, or if the amount of the debt exceeds 15 percent of disposable pay for an officially established pay interval, collection will normally be made in installments.

(2) The installments shall not exceed 15 percent of the disposable pay from which the deduction is made, unless the employee has agreed in writing to the deduction of a greater amount.

(3) Deduction will generally commence with the next full pay interval (ordinarily the next biweekly pay period) following written consent by the employee to salary offset, waiver of hearing, or the decision issued by the hearing officer.

(4) Installment deductions must be made over a period not greater than the anticipated period of employment except as provided in § 1450.24.

§ 1450.24 Liquidation from final check or recovery from other payment.

(a) If the employee retires or resigns or if his or her employment or period of active duty ends before collection of the debt is completed, offset of the entire remaining balance on the debt may be made from a final payment of any nature, including but not limited to, final salary payment or lump-sum leave due to the employee as of the date of separation.

(b) If the debt cannot be liquidated by offset from a final payment, offset may be made from later payments of any kind due from the United States, including, but not limited to, the Civil Service Retirement and Disability Fund, pursuant to § 1450.11 of this regulation.

§ 1450.25 Non-waiver of rights by payments.

An employee's involuntary payment of all or any portion of a debt being collected under 5 U.S.C. 5514 shall not be construed as a waiver of any rights which the employee may have under 5 U.S.C. 5514 or any other provision of contract or law, unless statutory or contractual provisions provide to the contrary.

§ 1450.26 Refunds.

(a) Refunds shall promptly be made when—

(1) A debt is waived or otherwise found not owing to the United States (unless expressly prohibited by statute or regulation); or

(2) The employee's paying agency is directed by an administrative or judicial order to refund amounts deducted from his or her current pay.

(b) Refunds do not bear interest unless required or permitted by law or contract.

§ 1450.27 Interest, penalties, and administrative costs.

The assessment of interest, penalties and administrative costs shall be in accordance with Subpart D of this regulation.

§ 1450.28 Recovery when paying agency is not creditor agency

(a) *Responsibilities of creditor agency.* Upon completion of the procedures established under 5 U.S.C. 5514, the creditor agency must do the following:

(1) The creditor agency must certify, in writing, that the employee owes the debt, the amont and basis of the debt, the date on which payment(s) is due, the date the Government's right to collect the debt first accrued, and that the creditor agency's regulations implementing 5 U.S.C. 5514 have been approved by OPM.

(2) If the collection must be made in installments, the creditor agency also must advise the paying agency of the number of installments to be collected, the amount of each installment, and the commencing date of the first installment (if a date other than the next officially established pay period is required).

(3) Unless the employee has consented to the salary offset in writing or signed a statement acknowledging receipt of the required procedures, and the written consent or statement is forwarded to the paying agency, the creditor agency also must advise the paying agency of the action(s) taken under 5 U.S.C. 5514(b) and give the date(s) the action(s) was taken.

(4) Except as otherwise provided in this paragraph, the creditor agency must submit a debt claim containing the information specified in paragraphs (a)(1) through (3) of this section and an installment agreement (or other

instruction on the payment schedule), if applicable to the employee's paying agency.

(5) If the employee is in the process of separating, the creditor agency must submit its claim to the employee's paying agency for collection pursuant to § 1450.24. The paying agency must certify the total amount of its collection and provide copies to the creditor agency and the employee as stated in paragraph (c)(1) of this section. If the paying agency is aware that the employee is entitled to payments from the Civil Service Retirement and Disability Fund, or other similar payments, it must provide written notification to the agency responsible for making such payments that the debtor owes a debt (including the amount) and that the provisions of this section have been fully compiled with. However, the creditor agency must submit a properly certified claim to the agency responsible for making such payments before collection can be made.

(6) If the employee is already separated and all payments from his or her former paying agency have been paid, the creditor agency may request, unless otherwise prohibited, that money due and payable to the employee from the Civil Service Retirement and Disability Fund (5 CFR 831.1801 et seq.), or other similar funds, be administratively offset to collect the debt. (31 U.S.C. 3716 and 102.4 FCCS.)

(b) *Responsibilities of paying agency—*

(1) *Complete claim.* When the paying agency receives a properly certified debt claim from a creditor agency, deductions should be scheduled to begin prospectively at the next officially established pay interval. The employee must receive written notice that the paying agency has received a certified debt claim from the creditor agency (including the amount) and written notice of the date deductions from salary will commence and of the amount of such deductions.

(2) *Incomplete claim.* When the paying agency receives an incomplete debt claim from a creditor agency, the paying agency must return the debt claim with a notice that procedures under 5 U.S.C. 5514 and this subpart must be provided, and a properly certified debt claim received, before action will be taken to collect from the employee's current pay account.

(3) *Review.* The paying agency is not required or authorized to review the merits of the creditor agency's determination with respect to the amount or validity of the debt certified by the creditor agency.

(c) *Employees who transfer from one paying agency to another.*

(1) If, after the creditor agency has submitted the debt claim to the employee's paying agency, the employee transfers to a position served by a different paying agency before the debt is collected in full, the paying agency from which the employee separates must certify the total amount of the collection made on the debt. One copy of the certification must be furnished to the employee, another to the creditor agency along with notice of employee's transfer. However, the creditor agency must submit a properly certified claim to the new paying agency before collection can be resumed.

(2) When an employee transfers to another paying agency, the creditor agency need not repeat the due process procedures described by 5 U.S.C. 5514 and this subpart to resume the collection. However, the creditor agency is responsible for reviewing the debt upon receiving the former paying agency's notice of the employee's transfer to make sure the collection is resumed by the new paying agency.

Subpart D—Interest, Penalties, and Administrative Costs

§ 1450.29 Assessment.

(a) Except as provided in paragraph (h) of this section, or § 1450.30, FMCS shall assess interest, penalties and administrative costs on debts owed to the United States pursuant to 31 U.S.C. 3717. Before assessing these charges, FMCS will mail or hand-deliver a written notice to the debtor. This notice shall include a statement of the agency's requirements concerning these charges. (Sections 1450.9 and 1450.21).

(b) Interest shall accrue from the date on which notice of the debt and the interest requirements is first mailed or hand-delivered to the debtor, using the most current address that is available to the agency. If FMCS should use an "advance billing" procedure—that is, if it mails a bill before the debt is actually owed—it can include the required interest notification in the advance billing, but interest may not start to accrue before the debt is actually owed. FMCS will exercise care to insure that the notices required by this section are dated and mailed or hand-delivered on the same day.

(c) The rate of interest assessed shall be the rate of the current value of funds to the United States Treasury (i.e., the Treasury tax and loan account rate), as prescribed and published by the Secretary of the Treasury in the **Federal Register** and the Treasury Fiscal Requirements Manual Bulletins annually or quarterly, in accordance with 31 U.S.C. 3717. FMCS may assess a higher rate of interest if it reasonably determines that a higher rate is necessary to protect the interests of the United States. The rate of interest, as initially assessed, shall remain fixed for the duration of the indebtedness except that where a debtor has defaulted on a repayment agreement and seeks to enter into a new agreement, FMCS may set a new interest rate which reflects the current value of funds to the Treasury at the time the new agreement is executed. Interest will not be assessed on interest, penalties, or administrative costs required by this section. However, if the debtor defaults on a previous repayment agreement, charges which accrued but were not collected under the defaulted agreement shall be added to the principal to be paid under a new repayment agreement.

(d) FMCS shall assess against a debtor charges to cover administrative costs incurred as a result of a delinquent debt—that is, the additional costs incurred in processing and handling the debt because it became delinquent. Calculation of administrative costs shall be based upon actual costs incurred or upon cost analyses establishing an average of actual additional costs incurred by the agency in processing and handling claims against other debtors in similar stages of delinquency. Administrative costs may include costs incurred in obtaining a credit report or in using a private debt collector, to the extent they are attributable to delinquency.

(e) FMCS shall assess a penalty charge, not to exceed 6 percent a year, on any portion of a debt that is delinquent for more than 90 days. This charge need not be calculated until the 91st day of delinquency, but shall accure from the date that the debt became delinquent.

(f) When a debt is paid in partial or installment payments, amounts received by the agency shall be applied first to outstanding penalty and administrative cost charges, second to accrued interest, and third to outstanding principal.

(g) FMCS will waive the collection of interest on the debt or any portion of the debt which is paid within 30 days after the date on which interest began to accrue. FMCS may extend this 30-day period, on a case-by-case basis, if it reasonably determines that such action is appropriate. Also, FMCS may waive, in whole or in part, the collection of interest, penalties, and/or administrative costs assessed under this section under the criteria specified in Part 103 of the Federal Claims Collection

Standards (4 CFR Part 103) relating to the compromise of claims (without regard to the amount of the debt), or if the agency determines that collection of these charges would be against equity and good conscience, or not in the best interests of the United States. Waiver under the first sentence of this paragraph (g) is mandatory. Under the second and third sentences, it may be exercised under the following circumstances:

(1) Waiver of interest pending consideration of a request for reconsideration, administrative review, or waiver of the underlying debt under a permissive statute, and

(2) Waiver of interest where FMCS has accepted an installment plan, there is no indication of fault or lack of good faith on the part the of debtor, and the amount of interest is large enough in relation to the size of the installments that the debtor can reasonably afford to pay, that the debt will never be repaid.

(h) Where a mandatory waiver or review statute applies, interest and related charges may not be assessed for those periods during which collection action must be suspended under § 104.2(c)(1) of the Federal Claims Collection Standards (4 CFR Part 104).

§ 1450.30 Exemptions.

(a) The provisions of 31 U.S.C. 3717 to not apply:

(1) To debts owed by any State or local government;

(2) To debts arising under contracts which were executed prior to, and were in effect on (i.e., were not completed as of), October 25, 1982;

(3) To debts where an applicable statute, regulation required by statute, loan agreement, or contract either prohibits such charges or explicitly fixes the charges that apply to the debts arising under the Social Security Act, the Internal Revenue Code of 1954, or the tariff laws of the United States.

(b) However, FMCS is authorized to assess interest and related charges on debts which are not subject to 31 U.S.C. 3717 to the extent authorized under the common law or other applicable statutory authority.

§ 1450.31. Other sanctions.

The sanctions stated in this subpart are not intended to be exclusive. Other sanctions which may be imposed by the Director of FMCS include placement of the debtor's name on a list of debarred, suspended or ineligible contractors or grantees; conversion of method of payment under a grant from an advance payment method to a reimbursement method; or revocation of a letter of credit. Notice will be given by FMCS to the debtor regarding the imposition of such other sanctions.

Dated: July 3, 1986.

Duane M. Buckmaster,

Deputy Director.

[FR Doc. 86-15424 Filed 7-8-86; 8:45 am]

BILLING CODE 6372-01-M

ENVIRONMENTAL PROTECTION AGENCY

40 CFR Part 81

[A-5-FRL-3046-1]

Designation of Areas for Air Quality Planning Purposes; Attainment Status Designations: Illinois

AGENCY: U.S. Environmental Protection Agency (USEPA).

ACTION: Final rulemaking.

SUMMARY: This rulemaking revises the Ozone designation for Williamson County from nonattainment to attainment. This revision is based on a request from the State of Illinois to redesignate this area and on the supporting data the State submitted. Under the Clean Air Act, designations can be changed if sufficient data are available to warrant such change.

EFFECTIVE DATE: This final rulemaking becomes effective on August 8, 1986.

ADDRESSES: Copies of the redesignation request, technical support documents and the supporting air quality data are available at the following addresses:

U.S. Environmental Protection Agency, Region V, Air Programs Branch, 230 S. Dearborn Street, Chicago, Illinois 60604

Illinois Environmental Protection Agency, Division of Air Pollution Control, 2200 Churchill Road, Springfield, Illinois 62706.

FOR FURTHER INFORMATION CONTACT: Randolph O. Cano, Air and Radiation Branch (5AR-26), U.S. Environmental Protection Agency, Region V, Chicago, Illinois 60604, (312) 886-6035.

SUPPLEMENTARY INFORMATION: Under section 107(d) of the Act, the Administrator of USEPA has promulgated the National Ambient Air Quality Standards (NAAQS) attainment status for each area of every state. See 43 FR 8962 (March 3, 1978) and 40 CFR Part 81 (1985). These area designations may be revised whenever the data warrants.

USEPA's policy as contained in the "Guideline for the Interpretation of Ozone Air Quality Standards" (EPA-450/4-79-003), provides that the NAAQS for ozone is violated when the annual average expected number of daily exceedances of the standard (0.12 parts per million (ppm), one-hour average) is greater than or equal to 1.05 at any site in the area under consideration. A daily exceedance occurs when the maximum hourly ozone concentration during a given day exceeds 0.124 ppm (EPA-450/4-79-003).

Criteria for redesignation requests, as they pertain to ozone are discussed in the following USEPA memoranda:

1. December 7, 1979 from Richard G. Rhoads to the Directors of Air and Hazardous Materials Divisions, Region I-X, "Criteria for Ozone Redesignations Under Section 107."

2. April 21, 1983, from Sheldon Meyers to Directors of Air Management Division, "Section 107 Designation Policy Summary."

3. December 23, 1983, from G.T. Helms to Chiefs of Air Program Branches, Region I-X, "107 Questions and Answers."

USEPA's policy on ozone redesignation as contained in the above referenced policy memoranda is summarized as follows:

1. Generally, the most recent 3 years of quality-assured ozone monitoring data are to be considered. As little as 1 year of data may be considered if these are the only available data.

2. Even though 3 years of data may exist for a given site, less than 3 years of ozone data may be considered as adequate support for a redesignation to attainment. If less than 3 years of data are used, no exceedances of the ozone standard can have occurred during the most recent year or 2 years. Consideration of only the most recent year of data also requires the use of a state-of-the-art analysis to demonstrate that the State Implementation Plan (SIP) control strategy is sound and that actual, enforceable emission reductions are responsible for the recent air quality improvement.

3. The designation given for an area applies to whole counties. No subdivision of a county is allowed. Urban areas should have a single designation, with the designation area including the entire urbanized area and fringe areas of development.

4. The nonattainment area should be of sufficient size to include all significant impacting volatile organic compound emission sources.

On August 6, 1985 (50 FR 31732), USEPA proposed to revise the designation of Macoupin, Monroe and Williamson Counties from nonattainment to attainment for ozone. This revision was based on a July 20, 1984, request from the State of Illinois. A

detailed discussion of the basis of USEPA's action can be found in the notice of proposed rulemaking. During the public comment period, no comments were submitted.

On February 28, 1986, USEPA notified the State that although USEPA proposed to designate Macoupin and Monroe Counties to attainment, USEPA could no longer support the redesignation of these counties. USEPA's Aerometric Data Bank indicated 1985 exceedances of the ozone NAAQS in Macoupin and Monroe Counties not contemplated in the August 6, 1985 (50 FR 31732), proposed rulemaking. These exceedances, when coupled with the three prior exceedances observed in each of these two counties in 1983 and 1984, constitute violations of the ozone NAAQS. Under the circumstances, USEPA requested that the State withdraw its ozone redesignation request for these counties. On March 31, 1986, the State responded with a withdrawal of their ozone redesignation request for these two counties. Based on this withdrawal, USEPA has withdrawn its proposed ozone redesignation of Macoupin and Monroe Counties.

USEPA, today, approves the redesignation of Williamson County from nonatainment for ozone to attainment for the following reasons:

1. Illinois presented three years of quality assured ozone monitoring data for Williamson County which showed no exceedances or violations of the ozone NAAQS.

2. The request for redesignation covers the whole county and not a portion of it.

3. The redesignation area includes all significant sources of VOC which impact the County.

The Office of Management and Budget has exempted this rule from the requirements of Section 3 of Executive Order 12291.

Under Section 307(b)(1) of the Act, petitions for judicial review of this action must be filed in the United States Court of Appeals for the appropriate circuit by September 8, 1986. This action may not be challenged later in proceedings to enforce its requirements. (See 307(b)(2).)

List of Subjects in 40 CFR Part 81

Intergovernmental relations, Air pollution control, National parks, Wilderness areas.

Dated: June 27, 1986.

Lee M. Thomas,
Administrator.

PART 81—DESIGNATION OF AREAS FOR AIR QUALITY PLANNING PURPOSES—ILLINOIS

Part 81 of Chapter I, Title 40 of the Code of Federal Regulations is amended as follows:

1. The authority citation for Part 81 continues to read as follows:

Authority: 42 U.S.C. 7401–7642.

2. Section 81.314 is amended by revising the Ozone attainment status designation of Williamson County from "Does Not Meet Primary Standards" to "Cannot be Classified or Better than National Standards" as follows:

§ 81.314 Illinois.

ILLINOIS—OZONE

Designated area	Does not meet primary standards	Cannot be classified or better than national standards
* * * * *		
AQCR 74:		
* * * * *		
Williamson County		X
* * * * *		

[FR Doc. 86–15418 Filed 7–8–86; 8:45 am]
BILLING CODE 6560–50–M

LEGAL SERVICES CORPORATION

45 CFR Parts 1600 and 1631

Expenditure of Grant Funds

AGENCY: Legal Services Corporation.

ACTION: Final rule; amendment.

SUMMARY: On February 20, 1986, the Corporation published in the **Federal Register** a proposed new rule on the expenditure of grant funds. After carefully considering comments received, the Board of Directors on May 23, 1986, approved an amended version of this proposal. Under the new rule recipients must expend all funds derived from the Corporation in accordance with the restrictions and provisions of Pub. L. 99–180 of December 13, 1985, unless they obtain a waiver from the Corporation.

EFFECTIVE DATE: August 8, 1986.

FOR FURTHER INFORMATION CONTACT: Michael J. Coster, Comptroller, 400 Virginia Avenue SW., Washington, DC 20024–2751, (202) 863–1820.

SUPPLEMENTARY INFORMATION: This rule responds to concerns that certain activities, such as grassroots lobbying, which Congress restricted in 1982, 1983, 1984, and 1985 appropriations measures would be continued into 1986 and beyond with pre-1982 carry-over funds. In the last few years each appropriations rider has contained restrictions on recipient activities that exceeded those in the Legal Services Corporation (LSC) Act. Recipients could spend on newly prohibited activities money left over from prior years was long as that money came from a year in which Congress had not prohibited the activity. One result of this legal anomaly was that recipients commonly stockpiled funds from prior years. When Congress passed Pub. L. 99–180 last winter it gave clear indication that this practice was to cease. This rule, in conjunction with the provisions of the *Audit Guide for Recipients and Auditors*, is intended to carry out the intent of Congress. It amends LSC regulations in two respects.

First, part 1600 is amended by the addition of a definition of "control", a term that is used both in new part 1631 and in section 7 of Chapter 1 of the Audit Guide. In the past, certain recipients have sought to shield LSC funds from oversight by the Corporation and to evade the restrictions Congress imposed on such funds by awarding them to mirror corporations or other related organizations. The purpose of this definition is to ensure that recipients do not evade LSC oversight by shifting funds to other organizations over which recipients have substantial control. This definition recognizes that control can exist without being directly exercised. Control exists where arm's-length transactions between two organizations are impossible because of the ability of one organization to determine or influence the management or policies of the other. The definition thus focuses not only on evidence of technical relatedness, such as common directors, but on the real ability of one organization to influence another.

Second, a new Part 1631 entitled "Expenditure of Grant Funds" is created to implement the action of Congress. Section 1631.1, the operative provision, requires recipients to expend all LSC funds in accordance with the restrictions and provisions of Pub. L. 99–180. The term "LSC funds" covers all funds derived from the Corporation. It includes income from LSC funds as well as LSC funds held by mirror corporations or other controlled organizations. The only exception to § 1631.1 is that recipients may spend funds for the continued representation of aliens in cases where representation commenced prior to January 1, 1983, or where the Corporation approves the representation. Section 1631.2 sets up a procedure under which a recipient may apply for waiver of the restrictions contained in § 1630.1. Paragraph (a)

provides for waivers in cases of alien representation. Paragraph (b) requires programs seeking waiver to document for the Corporation their efforts to dispose of cases involving ineligible aliens. Recipients may not spend restricted funds to complete alien cases until they shall have received waiver.

List of Subjects

45 CFR Part 1600

Legal Services.

45 CFR Part 1631

Aliens, Grant programs—Legal Services.

For the reasons stated in the preamble, 45 CFR Part 1600 is amended and new Part 1631 is added as follows:

PART 1600—[AMENDED]

1. The authority citation for Part 1600 is revised to read as follows:

(42 U.S.C. 2996)

2. Section 1600.1 is amended by inserting the following definition alphabetically as follows:

§ 1600.1 Definitions.

* * * * *

"Control" means the direct or indirect ability to determine the direction of management and policies or to influence the management or operating policies of another organization to the extent that an arm's-length transaction may not be achieved.

* * * * *

3. New Part 1631 is added as follows:

PART 1631—EXPENDITURE OF GRANT FUNDS

Sec.
1631.1 Policy.
1631.2 Application and waiver.

Authority: 42 U.S.C. 2996e(b)(1)(A), 2996f(a)(3); Pub. L. 99-190, 99 Stat. 1185; Pub. L. 99-180, 99 Stat. 1136.

§ 1631.1 Policy.

No Legal Services Corporation funds, including income derived therefrom and those LSC funds held by organizations which control, are controlled by, or are subject to common control with, a recipient or subrecipient, a group of recipients and/or subrecipients, or agents or employees of such organizations shall be expended, unless such funds are expended in accordance with all of the restrictions and provisions of Pub. L. 99-180 of December 13, 1985, except that such funds may be expended for the continued representation of aliens prohibited by said Public Law where such representation commenced prior to January 1, 1983, or as approved by the Corporation.

§ 1631.2 Application and waiver.

(a) The Corporation may grant a waiver of the restrictions contained in this Part to enable a program to complete representation in cases which commenced prior to January 1, 1986.

(b) Programs seeking a waiver pursuant to paragraph (a) of this section must submit documentation to the Corporation detailing their efforts to dispose of such cases in accordance with the procedures required in § 1626.6(a) (1), (2) and (3), and receive Corporation approval to expend funds for completion of the affected cases.

Dated: July 3, 1986.

John H. Bayly, Jr.,

General Counsel.

[FR Doc. 86-15429 Filed 7-8-86; 8:45 am]

BILLING CODE 6820-35-M

FEDERAL COMMUNICATIONS COMMISSION

47 CFR Part 73

[MM Docket No. 85-165; RM-4926, 5106, 5107]

Radio Broadcasting Services; Gainesville and Olney, TX, et al.

AGENCY: Federal Communications Commission.

ACTION: Final rule.

SUMMARY: This document allots Channel 300C2 to Gainesville, Texas, as that community's second FM channel at the request of Kevin Potter and Jack P. Nelson. In addition, Channel 248C2 is substituted for Channel 249A at Durant, Oklahoma, and Channel 248C2 is allotted to Olney, Texas, at the request of Thomas E. Spellman, permittee of Station KDEP-FM, Channel 249A at Durant and Ted Beck, respectively. The permit for Station KDEP-FM is also modified to specify Channel 248C2, thereby providing Durant with a first wide coverage FM service. Channel 248C2 at Olney, could provide that community's first local FM service. Channel 300C2 at Gainesville requires a site restriction of 28.1 kilometers (17.5 miles) north of the city. Channel 248C2 requires a site restriction of 24.4 kilometers (15.2 miles) south of Durant. With this action, this proceeding is terminated.

DATES: Effective August 8, 1986; the window period for filing applications for Channel 248C2 at Olney, Texas will open on August 9, 1986, and close on September 8, 1986.

FOR FURTHER INFORMATION CONTACT: Patricia Rawlings, (202) 634-6530.

SUPPLEMENTARY INFORMATION: This is a summary of the Commission's Report and Order, MM Docket No. 85-165, adopted June 19, 1986, and released July 2, 1986. The full text of this Commission decision is available for inspection and copying during normal business hours in the FCC Dockets Branch (Room 230), 1919 M Street, NW, Washington, DC. The complete text of this decision may also be purchased from the Commission's copy contractors, International Transcription Service, (202) 857-3800, 2100 M Street, NW, Suite 140, Washington, DC 20037.

List of Subjects in 47 CFR Part 73

Radio broadcasting.

1. The authority citation for Part 73 continues to read:

Authority: 47 U.S.C. 154, 303.

2. Section 73.202(b) is amended by adding the following communities and channels:

§ 73.202 Table of Allotments.

* * * * *

(b) * * *

OKLAHOMA

	Channel No.
* * * * *	
Durant	248C2, 296A
* * * * *	

TEXAS

	Channel No.
* * * * *	
Gainesville	233, 300C2
* * * * *	
Olney	248C2
* * * * *	

Mark N. Lipp,

Chief, Allocations Branch, Policy and Rules Division, Mass Media Bureau.

[FR Doc. 86-15382 Filed 7-8-86; 8:45 am]

BILLING CODE 6712-01-M

DEPARTMENT OF COMMERCE

National Oceanic and Atmospheric Administration

50 CFR Part 215

[Docket No. 60473-6127]

Subsistence Taking of North Pacific Fur Seals

AGENCY: National Marine Fisheries Service (NMFS), NOAA, Commerce.

ACTION: Emergency final rule.

SUMMARY: The NMFS is issuing a rule regarding the subsistence taking of North Pacific fur seals (*Callorhinus ursinus*) by Indians, Aleuts, and Eskimos who live on the Pribilof Islands. This action is necessary to protect the breeding stock of this declining species. This rule places restrictions upon the subsistence taking of fur seals allowed under the Marine Mammal Protection Act and the Fur Seal Act, and provides that the harvest may be suspended once the subsistence needs of the Pribilovians have been satisfied.

EFFECTIVE DATE: July 3, 1986.

ADDRESS: Assistant Administrator for Fisheries, National Marine Fisheries Service, NOAA, Department of Commerce, Washington, D.C. 20235.

FOR FURTHER INFORMATION CONTACT: Michael Gosliner (Principal Attorney), 202-673-5206 or Georgia Cranmore (Program Official), 202-673-5131.

SUPPLEMENTARY INFORMATION:

Background

From 1957 through 1984, a harvest of fur seals on the Pribilof Islands was conducted under the authority of the Interim Convention on Conservation of North Pacific Fur Seals (Convention). The parties to the Convention, the United States, Canada, Japan, and the Soviet Union, agreed to prohibit pelagic (at-sea) harvesting of seals, conduct limited land harvests and share the commercially valuable seal skins. The Convention came into force on October 14, 1957, and was extended in 1963, 1969, 1976, and 1980. Prior to the entry into force of the Convention, harvests were conducted under the 1911 Convention for the Preservation and Protection of Fur Seals. The 1911 treaty was interrupted prior to World War II by the withdrawal of Japan, but the Pribilof Islands seal herd was protected between 1941 and 1957 by a provisional agreement between the United States and Canada.

The subsistence needs of the Pribilovians for seal meat have traditionally been met from seals taken in the commercial skin harvest conducted under the Convention. The level of the commercial harvest historically has exceeded the estimated subsistence needs of the islanders. In 1984, for example, the commercial harvest on the Pribilof Islands totaled over 22,000 seals. Since 1973, no commercial take has been allowed on St. George Island and only a limited subsistance harvest has been authorized to protect ongoing fur seal population research. The resultant shortfall in meeting the St. George residents' subsistence requirements has been offset by providing them with meat from the St. Paul harvest.

Under the terms of the 1980 extension of the Convention, the Convention expired on October 14, 1984. On October 12, 1984, the parties to the Convention signed a protocol that, upon acceptance by all four parties, would extend the Convention until October 13, 1988. Japan, Canada, and the Soviet Union have ratified the 1984 protocol. On March 20, 1985, the President transmitted the protocol to the Senate, requesting its advice and consent. On June 13, 1985, a hearing was held on the protocol before the Senate Committee on Foreign Relations, but no final action has been taken on the protocol.

In consultation with the departments of State and Justice, and the Marine Mammal Commission, NOAA determined that no commercial harvest could be conducted under existing domestic law, absent Senate ratification of a protocol extending the Convention of provisional application of the protocol. Accordingly, on July 8, 1985 (50 FR 27914), NOAA promulgated an emergency interim rule to govern subsistence taking of North Pacific fur seals for the 1985 season under the authority of section 105(a) of the Fur Seal Act (FSA). The purpose of the interim rule was to limit the take of seals to a level providing for the legitimate subsistence needs of the Pribilovians and to restrict taking by sex, age, and season for herd management purposes. One important element of the interim rule was the maintenance of the humane harvest methods developed during the years of the commercial harvests.

Just prior to the expiration of the 19-day harvest season, the NMFS received an urgent request from the residents of St. Paul to extend the season for one additional day (August 6, 1985). Due to delays which occurred at the outset of the harvest period, several potential harvest days were lost. Consequently, the number of seals harvested by August 5 failed to reach even the lower bond of the subsistence need estimate provided in the preamble of the July 8 emergency rule. The Pribilovians were granted an emergency one day extension on August 6, 1985 (50 FR 32205). During the 1985 season, 3,384 seals were taken for subsistence on St. Paul Island and 329 on St. George. A theoretical mean consumption of 0.4 lbs. of seal meat per person per day for one year was possible for residents of St. Paul Island based on the amount of edible meat removed from seal carcasses and retained on that island.

The 1985 harvest was governed by a regulation intended to apply only for that harvest. At the outset of last year's harvest it appeared that a consensus could be reached resulting in the ratification of the protocol with reservations. Had this occurred, the issuance of additional regulations might not have been necessary. While the possibility that the protocol will be ratified still exists, it was determined that in the interim a permanent rule be promulgated to regulate the 1986 and subsequent harvests. Even if the protocol is ratified soon, depending upon any reservations attached to it, these regulations may be necessary. NMFS published a proposed rule on May 15, 1986 (51 FR 17896), and provided a 30-day public comment period.

Applicable Laws

The statutes are potentially applicable to the taking of fur seals on the Pribilof Islands absent the extension of the Convention, the Marine Mammal Protection Act (MMPA), 16 U.S.C. 1361, and the FSA, 16 U.S.C. 1151. Both statutes provide for the subsistence taking of fur seals by Alaskan Indians, Aleuts, and Eskimos, but their provisions are not identical.

Section 101(b) of the MMPA, 16 U.S.C. 1371(b), provides that marine mammals may be taken

> by any Indian, Aleut or Eskimo who resides in Alaska and who dwells on the coast of the North Pacific Ocean or the Arctic Ocean if such taking—
> (1) is for subsistence purposes; or
> (2) is done for the purposes of creating and selling authentic native articles of handicrafts and clothing . . .; and
> (3) in each case, is not accomplished in a wasteful manner.

Notwithstanding this provision, the Secretary of Commerce may prescribe regulations to limit the taking of marine mammals by Alaskan Natives if he determines the species to be depleted. Any regulations issued under the MMPA to restrict the native taking rights must be promulgated by formal, on-the-record rulemaking after an opportunity for an agency hearing.

The FSA provides for the subsistence take of fur seals under section 103, 16 U.S.C. 1153. Under the terms of section 103(a)

> Indians, Aleuts, and Eskimos who dwell on the coasts of the North Pacific Ocean are permitted to take fur seals [if] . . . the seals are taken for subsistence uses as defined in section 109(f)(2) of the [MMPA] (16 U.S.C. 1379), and only in canoes . . . propelled entirely by oars, paddles, or sails, and manned by not more than five persons each, in the way hitherto practiced and without the use of firearms.

It is arguable that this section does not apply to the Pribilovians since they have harvested fur seals on land for nearly 200 years and have not "hitherto practiced" canoe-based hunting. Moreover, section 103(b) more specifically addresses the subsistence harvest of fur seals on the Pribilof Islands and would appear to take precedence over the more general provisons of section 103(a).

Section 103(b) of the FSA states that

> Indians, Aleuts, and Eskimos who live on the Pribilof Islands are authorized to take fur seals for subsistence purposes as defined in section 109(f)(2) of the [MMPA] (16 U.S.C. 1379), under such conditions as recommended by the Commission and accepted by the Secretary of State. . . .

No such recommendations on the taking of fur seals for subsistence purposes by Pribilovians have been made by the Commission and accepted by the Secretary of State.

Subsistence takings allowed under section 109(f)(2) of the MMPA differ from those authorized by MMPA section 101(b). Section 109(f)(2) defines "subsistence uses" as

> the customary and traditional uses by rural Alaska residents of marine mammals for direct personal or family consumption as food, shelter, fuel, clothing, tools, or transportation; for the making and selling of handicraft articles out of nonedible byproducts of marine mammals taken for personal or family consumption; and for barter, or sharing for personal or family consumption.
>
> The term "family" means all persons related by blood, marraige, or adoption, or any persons living within a household on a permanent basis.
>
> The term "barter" means the exchange of marine mammals or other parts, taken for subsistence uses—(i) for other wildlife or fish or their parts, or (ii) for other food or for nonedible items other than money if the exchange is of a limited and noncommercial nature.

Section 101(b) allows the taking of marine mammals for the creation of handicrafts and clothing for sale, whereas section 109(f)(2) only permits handicraft articles to be made if the marine mammals were initially taken for consumption.

The definition of subsistence contained in the regulations which implement section 101(b) of the MMPA (50 CFR 216.3) allows marine mammal parts to be used by anyone who depends upon the taker to provide them with subsistence. In contrast, section 109(f)(2) allows personal or family consumption, or barter, or sharing for personal or family consumption.

Section 105(a) of the FSA empowers the Secretary of Commerce to "prescribe such regulations with respect to the taking of fur seals on the Pribilof Islands . . . as he deems necessary and appropriate for the conservation, management, and protection of the fur seal population . . . ." It is under this broad authority that these regulations are issued. The MMPA management scheme of section 109(f)(2), as referenced in section 103 of the FSA, was followed in the 1985 emergency rule and has been adopted in this rule.

Need for Emergency Regulations

The Pribilof Island fur seal population is currently declining at the rate of about 6 percent annually and is below levels which would result in maximum productivity. Extensive research conducted under the terms of the Convention indicates that a harvest of females, pups, or harem bulls could have a disastrous effect on the already declining fur seal population. One of the causes of the population decline observed prior to the 1970s is the female harvest which occurred between 1956 and 1968. In contrast, based on available information, a harvest of subadult males at levels which allow for the future reproductive needs of the population will have no negative impact on long-term population trends. Additional research is needed to determine the effect, if any, of the harvest on overall population trends.

Without this final rule in place when the Pribilovians begin harvesting seals, the age and sex classes of fur seals that may be taken would not be limited. Females, pups, and harem bulls would be subject to harvesting as well as the subadult male fur seals that were the sole target of the commercial harvest since 1969. Absent this regulation, the harvest would not be limited in time and place, but could continue as long as seals were available at any location where they congregate.

This rule provides harvest restrictions to ensure that none of the haulout areas of the bachelor males is overharvested. Hauling grounds on St. Paul Island may be harvested only once each week. Since, at any one time, many of the subadult male seals are away from the islands and are feeding at sea, the rotation of harvest sites is intended, in part, to allow a sufficient number of young seals to escape the harvest to return to breed in later years.

Under this rule, only taking by traditional harvesting methods is allowed. These methods have been determined to be painless and humane by a number of prominent veterinarians, including the Panel on Euthanasia of the American Veterinary Medical Association. By restricting the harvest to traditional techniques, taking will be humane and it is believed that the disruption of the fur seal rookeries will be minimized and that the risk of mistakenly taking female seals will be reduced.

Although this rule is being issued under emergency conditions it should be noted that a proposed rule was published and a full comment period provided.

Comments on the Proposed Rule

The public comment period on the proposed rule extended from May 15 to June 16, 1986. Written comments were received and accepted through June 21. Extensive comments on the proposal, comprising over 120 pages, were received from the following parties:

The Garden Club of America
The National Marine Mammal Laboratory, NMFS
The Wildlife Legislative Fund of America
International Wildlife Coalition
Tanadgusix Corporation (TDX)
Committee for Humane Legislation/ Friends of Animals, Inc.
Marine Mammal Commission (MMC)
The Aleut Community of St. Paul
William N. Arterburn
Defenders of Wildlife
Center for Environmental Education
Humane Society of the United States
Greenpeace International
Sierra Club
State of Alaska
Traditional Village Council of St. George Isl.
Animal Protection Institute of America
Fish & Wildlife Service, DOI

One of the major issues raised in these comments was the need to place a quota or upper limit on the number of seals that can be taken for subsistence. Seven commenters urged the establishment of a specific quota. Three of those recommended setting an upper limit of about 2,000–2,500 seals annually on St. Paul; while one comment mentioned an upper limit not to exceed recent commercial harvest limits (i.e.,

22,000). Two commenters recommended that the quota be set at less than the number taken in 1985 but gave no specific numbers. One pointed out that there is no evidence of an inadequate food supply on the islands and noted that alternative meat sources are available. One commenter asked that NMFS provide an estimate of subsistence needs. This estimate should consider changing economic conditions, increased dependence on fishing, and any changes in the Aleut population on the islands.

One group thought that the subsistence hunt is in a process of evolution and that a quota is not sufficiently flexible to accommodate changing circumstances. Another commenter supported the approach contained in the proposed rule that no specific quota be set, but requested that subsistence needs be quantified as soon as possible. A group on St. Paul Island repeated its 1985 claim of a subsistence need of 15,170 seals annually and pointed to historical records showing an average consumption of about 600 lbs. of seal meat per person per year.

One group requested that the NMFS evaluate seal and other subsistence resource use on the Pribilof Islands during the coming year. They want to establish a mechanism for annually determining whether a subsistence harvest is necessary. The MMC urged establishment of either a quota or a revised estimate of the range of animals that are likely to be needed for subsistence purposes based, in part, on data from last year's harvest. The MMC suggests that the quota or range estimate can be used to determine when subsistence needs have been satisfied during any one year. The MNFS has chosen to adopt this latter approach whereby annual range estimates are provided for subsistence needs on St. Paul and St. George Islands. As discussed below, when specific provisions of the harvest regulations are addressed, an annual estimate of expected subsistence needs for fur seals on each island will be established. This information and its background documentation will be provided in summary form in a **Federal Register** notice and will be subject to a 30-day public review.

One commenter mentioned that subsistence needs for seal meat on St. Paul Island will be less in 1986 if no meat is transferred to St. George Island. The Aleut Community of St. Paul provided an estimated subsistence need of 75–100 seals/day, assuming a 4-week harvest period, as an absolute minimum projected food requirement. This equates to an annual minimum take of 2,100 to 2,800 seals. They also requested a season from June 30 to September 30 (93 possible harvest days). A take of 75–100 seals per day for 93 days could result in a harvest of from 6,975 to 9,300 seals annually, although the daily harvest rate is likely to be lower if a longer season is provided. Based on a review of this and other information provided by commenters and the results of the harvest season in 1985, the NMFS is establishing a harvest range estimate for St. Paul Island of 2,400 to 8,000 seals in 1986. This estimate may be revised during the harvest if the lower bound of the range is reached, based on an analysis of harvest data as provided for in § 215.32(e)(3). Further discussion of the use of this range estimate is provided in the analysis of regulatory provisions.

A determination of a subsistence need estimate for St. George Island is more difficult since a quota has existed on their subsistence harvest since 1973. However, based on native population, the St. George harvest is likely to account for approximately one quarter of the total harvest. In their comments on the proposed rule, St. George Island representatives agreed to limit the take to 100 seals per week for their suggested 18 week season (June 30–November 1). Such a limitation would place an upper bound of 1800 seals on the subsistence need estimate in 1986. A range of 800 to 1800 seals are expected to be needed for food on St. George Island in 1986. Again, this estimate may be revised during the season according to procedures provided in § 215.32(e)(3). Estimates of subsistence needs will be determined annually based on data from the preceding year's harvest, utilization of meat stored, the prevailing economic conditions on the islands, and other relevant information. It is expected that the range of estimated subsistence needs will narrow as additional harvest data are developed.

Six commenters addressed the question of a harvest season. The TDX Corporation on St. Paul Island asked for a season spanning June 30 to September 30. They stated that they prefer fresh meat and found it prohibitively expensive last year to freeze a year's supply of meat taken within a short season. They also said that while June and July were chosen as harvest seasons during the years of the commercial harvest based on skin quality, in fact, animals taken in August provide the best quality meat. This group claims that an extension of the harvest into September would not increase the accidential taking of females because: (1) only experienced sealers will be harvesting seals and they can distinguish females at up to 10 feet away, (2) the harvest will involve traditional methods but will be on a smaller scale so as to provide more time for carefully screening the seals taken, and (3) the Aleuts respect and understand the importance of female seals in the species' population ecology. St. Paul's Aleut Community also requested a season extension through September 30, but noted that the taking of increased numbers of females would warrant termination or substantial restriction of any lengthening of the harvest.

Three commenters objected to the 40-day harvest season described in the proposed rule (June 30–August 8), saying that this could result in taking in excess of 7,000 to 8,000 seals annually based on last year's daily harvest rate. One specifically opposed any extension to accommodate a family hunt because of the risk of taking more females in August. One commenter said that the need for a longer killing period has not been justified but that they would not object to a "slight lengthening" if an upper limit to the harvest can be established. St. George Island representatives are requesting a harvest season of from July 1 to November 1, with an earlier commencement beginning in 1987. They do agree, however, to take no more than 100 seals per week.

The NMFS is establishing a harvest season on both islands running from June 30 to August 8 with possible extensions up to September 30 under certain circumstances. This is designed to accommodate the family hunt requested by representatives of both islands. It is the opinion of NMFS that the family hunt, described below, can better provide for the subsistence needs of the Pribilovians for fresh meat and has been designed and will be monitored to minimize disturbance to the rookeries and stress to harvested animals.

The National Marine Mammal Laboratory (NMML) cautioned that frequent, uncoordinated disturbances could cause seals to abandon traditional landing sites. The NMML recommended that harvesting be done only by experienced, coordinated crews and that no driving or killing of seals by individuals be allowed. Another commenter recommended that drives of seals be confined to the early morning hours when temperatures are low and herding stress is minimal.

St. Paul reported that it cost over $150,000 to carry out the traditional-style

subsistence harvest in 1985. St. George representatives said it cost them $130,000. These costs apparently included salaries for experienced sealers, preparation and storage costs and some expenses incurred for the transportation of meat between islands. Four commenters recommended that the harvest methods developed during the time of the commercial harvest (i.e., short season, large-scale drives and daily harvests utilizing paid sealers) be abandoned in favor of a family hunt more in keeping with other Alaskan Native marine mammal subsistence harvests. The Aleut Community of St. Paul requested that the final rule provide for a nonpaying "family hunt" involving the use of between 4 and 10 Aleut sealers experienced in the traditional hunt techniques. The core time, place, and manner of the harvest described in the proposed rule could still be observed. However, this group feels that the less intrusive nature and smaller scale of the family hunt should justify a longer harvest season.

The Traditional Village Council of St. George Island expressed its desire for a "true subsistance harvest" involving an extended season, hunting on an as-needed basis, the continuation of humane killing practices, and no commercial utilization of seal parts. This group offered to serve as a self-regulating body and work with the NMFS representatives to count seals and provide other harvest information upon request. They expressed a willingness to accept an NMFS observer to monitor the harvest. They recommended a "family-style", individualized harvest by experienced sealers or islanders under the tutelage of experienced sealers. Efforts would be made to avoid taking females and causing unnecessary disturbances of the rookeries.

The NMFS is sympathetic to the idea of a family hunt. Regulatory provisions which delineate the allowable harvest methods, afford the Aleuts the opportunity to use small household groups and take seals at a slower rate over a longer period of time. In our view, this harvest regime will better provide for the true subsistence needs of the Pribilovians. While there is a risk that this arrangement could result in an increased taking of female seals, or disturbance to rookeries, the NMFS plans to mitigate these risks by placing additional restrictions on taking beyond August 8.

Three commenters recommended that we retain the restrictive quota on St. George in order to protect the research programs there and continue to provide transportation of edible meat from St. Paul. Two of these reviewers, however, indicated that if the research program is terminated, similar harvest restrictions should apply on both islands. On the other hand, St. Paul interests stated that "with the harvest now being limited to subsistence take only, there is no need to do comparative studies between St. Paul and St. George". (The studies referred to in this comment are designed to compare the population trends of harvested versus unharvested populations.) They further stated that scientists have had 13 years to do comparative studies. According to the comments from St. Paul, St. George Aleuts should have the same subsistence harvest opportunities as St. Paul Aleuts. St. George representatives point out that obtaining seal meat from St. Paul last year was "impractical, wasteful, prohibitively costly to St. George, and violative of our subsistence rights". They want a true subsistence harvest similar to those of other Alaskan Natives.

The MMC requested that NMFS address the following concerns before changing the St. George harvest regulations: (1) the effect on the St. George Island Research program, (2) the reallocation of funds if this research is terminated, (3) the restrictions on taking that would apply to St. George, and (4) whether fewer seals will be needed on St. Paul if more seals are taken on St. George.

An increased take of seals for subsistence on St. George Island will not terminate the research program there, one aspect of which attempts to compare the "unharvested" population on St. George to the "harvested" population of St. Paul. It will take up to six years before the impact on adult sex ratios, of any increased harvest of subadult males on St. George, is manifested. Thus, the NMFS will still be able to monitor the "unharvested" population on St. George for some time even if the St. George harvest is expanded. Additionally, NMFS scientists are already emphasizing other research on St. George, such as pregnancy and mortality rate determinations. No reallocation of funds is anticipated at this time. The final rule imposes identical harvest restrictions, except for the authorized haulout areas, for St. George and St. Paul. However, some flexibility is provided that may be exercised differently on the two islands. In response to the final concern raised by the MMC, NMFS anticipates that fewer seals will be needed on St. Paul since they are no longer required to share a portion of their harvest with St. George. This fact appears to be reflected in the minimum subsistence need estimate provided by the St. Paul Island representatives of 2,100–2,800 seals for 1986, versus the 3,384 taken in 1985.

Wasteful taking was a topic addressed by nine of the 18 commenters. Two claimed that the 1985 subsistence hunt on St. Paul Island was wasteful and pointed out that of the 3,384 seals killed, meat from over 1,000 seals spoiled or was not used. One commenter believed that further taking should not be allowed until all meat from the 1985 harvest has been consumed. One of the commenters recommended a reduction in the number of seals taken per day so that more time is available to properly butcher and package meat to prevent unnecessary spoilage and waste.

Most of the unused meat from the 1985 harvest consisted of backs and ribs, portions which are less favored by the Pribilovians. Traditionally, backs have been very infrequently eaten. Additionally, problems were encountered by the freezing method employed on St. Paul during the 1985 harvest. The islanders attempted to freeze meat from up to 200 seals per day in a central facility. There was some question whether the meat was frozen rapidly enough to prevent bacterial growth and there were doubts expressed concerning the edibility of some of the meat. Because of the questions about the frozen meat's fitness for consumption it would be unreasonable to condition the 1986 harvest on full use of the remaining meat from 1985.

Four commenters urged that NMFS require utilization of all edible portions of each carcass, including tongues, backs, ribs, chests, rearflippers and hindquarters. The Village Corporation on St. Paul (TDX) stated its position that ribs, backbones and hindquarters need not be taken since they do not eat large quantities of these parts. A minimal use of ribs, backbones and hindquarters should not, in their opinion, be considered "wasteful". In sharp contrast, the Aleut Community of St. Paul indicated that it is the traditional use and consumption of the backbone that has always been slight when compared to hearts, livers, flippers, breasts, shoulders, and ribs. They stated that the backbone contains very little meat but may occasionally be used as an additive to soup or pot roast.

The State of Alaska asked NMFS to determine what parts must be taken for human consumption, consistent with the traditional uses of fur seals, to comply with the requirement that substantial use be made of each seal taken.

As defined in the preamble to the proposed rule "substantial use" of a carcass means that "it has been dressed out and that the front flippers, shoulders, and most other readily obtainable and utilizable tissues and organs have been removed for subsistence uses." It is fairly evident that the backbone portion of seals is subject to a limited array of uses. Thus, it cannot be expected that all back portions are readily utilizable, although some may be. The NMFS considers it counterproductive to require the Pribilovians to take all of the backbones for consumption when the possibility of using more than a small fraction of these is remote.

More problematical is determining the use expected to be made of ribs. TDX indicated that only a small quantity of ribs is eaten, while the Aleut Community of St. Paul listed ribs along with hearts, livers, flippers, breasts, and shoulders as those portions more often consumed. Ribs are probably more readily utilizable than are backbones, but it is not known to what precise uses they may be put. The NMFS will try to resolve the discrepancy between the two St. Paul comments during this year's harvest and will include in its summary of the 1986 harvest (to be published in the **Federal Register** in 1987) any additional information obtained on the use of ribs and what would constitute substanial use.

Based upon a review of all pertinent literature, public testimony and written comments, the NMFS considers the removal and consumption of the following seal parts to constitute substantial use which would be consistent with the requirement that the taking of seals not be accomplished in a wasteful manner: all hearts, livers, flippers, breasts, shoulders, and other readily utilizable tissues and organs, a limited number of backbones, and some, but not necessarily all, rib sections.

Several commenters noted that the restrictions on the use of nonedible byproducts contained in the proposed rule created a situation under which some portions of fur seals not traditionally used for subsistence may be wasted. For example, one commenter completely opposed these regulations because of the restrictions on sales of pelts. According to this reviewer, "the actual effect of the proposed regulation, by not allowing commercial use of the fur of the *fur* seal, is to mandate waste." The State of Alaska objected to restrictions on economic uses of nonedible byproducts because (1) the taking has no negative impact on the seal herd, (2) it is wasteful not to use the byproducts, and (3) this action forecloses certain economic opportunities for Pribilof Island residents. The U.S. Fish and Wildlife Service (FWS) asked NMFS to consider the use for dog food of any meat or byproducts that are not used for human consumption.

St. Paul's TDX Corporation stated that, "For hundreds of years Aleut people used the Fur Seal as one of our main economic bases and in the last 200 years we have used the Fur Seal by-products in the cash exchange economy. Selling of our Fur Seal skins, sticks and meat is our traditional and customary use of the Fur Seal". TDX wants permission to sell skins and other harvest byproducts from the first 6,000 seals taken on St. Paul for subsistence purposes. They feel this would provide the means to fund "traditional harvesting methods". Two commenters emphasized that the bacula (sealsticks) should not be sold. One mentioned that an independent observer had witnessed several attempts at retrieval of sealsticks for later use during the 1985 subsistence harvest. Two commenters said that bacula should be collected and destroyed by the NMFS representatives to avoid creating any incentive to harvest more seals than necessary for food.

The NMFS is cognizant of the arguments that can be made on each side of the issue of whether the sale of byproducts should be allowed. There is merit to both positions. While it may make sense to allow the full use of the harvested seals, including the commercially valuable skins, some risk exists that a profit motive may inflate the number of seals harvested beyond that needed for subsistence. This rule need not choose between these opposing viewpoints. While it may be possible to construct provisions that would allow full utilization of fur seal parts while ensuring that only a subsistence level of seals is harvested, section 109 (f)(2) of the MMPA is clear that only *handicrafted* nonedible byproducts may be sold. Despite the logic of either position on this issue, NMFS cannot promulgate a rule to allow the commercial use of raw seal parts. Those who feel strongly that partial use or no use of seal skins or other byproducts constitutes waste, are free to seek a legislative solution to this problem.

The proposed rule specifically requested comments on the need for further rulemaking on the uses that may be made of nonedible byproducts of the subsistence harvest, i.e., sale of skins and sealsticks. Three comments were received on this issue and all opposed further rulemaking on commercial use of seal parts, although questions were raised by commenters as to the precise uses that may be made of edible portions of fur seals, mostly those less preferred parts such as backs and ribs.

The St. Paul residents have asked if fur seal meat may be sold at the island restaurant which caters primarily to tourists. The answer is no. Not only is the sale of edible portions prohibited by this rule, but edible portions may only be bartered to, or shared with, Alaskan Natives.

A second inquiry is whether any parts of seals may be used as bait in fishing operations. The answer to the issue depends on the nature of the fishery. If the fish or crab caught will be used for native subsistence, then the Aleuts would be permitted to use seal parts as bait. If, however, the catch was destined for commercial use, the seal meat could not be used as bait.

The last question on the exact uses of seal meat allowed under this rule is that posed on the use of seal parts as dog food. Here again, the commercial use of seal meat in this manner is not provided for by the applicable law. Some Alaskan communities may be able to claim that feeding dogs is a subsistence use since it provides transportation, one of the enumerated subsistence uses. Concerning the use of seal meat for local use as dog food on the Pribilof Islands, one need only refer to 50 CFR 215.23. That regulation prohibits the landing of dogs on the Pribilofs in order to prevent molestation of fur seals.

Two reviewers urged action to ratify the 1984 Protocol extending the Convention until 1988. The NMFS agrees that ratification of the 1984 protocol which would extend the Convention is an important step in providing international protection to the North Pacific fur seal and the continuation of essential cooperative management and research. The Secretaries of Commerce and State have expressed these views to the Senate and urged prompt ratification.

Two commenters cited provisions of the FSA Amendments of 1983 as requiring a phase out of the subsistence harvest. Such a reading misconstrues the intent of section 206(a)(1) of the FSA. This section provides that, "In order to promote the development of a stable, self-sufficient enduring and diversified economy not dependent on sealing, the Secretary shall cause to be established a Trust for the benefit of the Natives of the Pribilof Islands . . ." Clearly, this provision speaks to the eventual decrease in economic reliance on

commercial sealing, but it should not be construed to diminish the cultural and nutritional importance of the subsistence harvest. In fact, it is these same 1983 Amendments to the FSA that specifically provided for a subsistence harvest in section 103. It is anticipated that the needs of the Aleuts will continue to be met through the limited subsistence harvests provided for under these regulations. It is worth noting, however, that changing economic conditions on the islands may well alter the levels of subsistence takes. The NMFS intends to determine whether economic conditions have changed the number of animals required for subsistence as part of its annual assessment of the Pribilovians' subsistence needs.

As part of its comments, the MMC provided a formal recommendation that the NMFS designate the Pribilof Island population of the North Pacific fur seal as depleted under the MMPA. The FWS and The Center for Environmental Education also requested that a finding of depletion be made. The MMPA defines "depletion", among other things, to mean "any case in which the Secretary, after consultation with the Marine Mammal Commission and the Committee of Scientific Advisors on Marine Mammals established under . . . this Act, determines that a species or population stock is below its optimum sustainable population . . . ." The FWS suggests that a depletion designation could provide the NMFS with greater management flexibility in the future, should this species fail to rebound to original numbers.

A status review of the North Pacific fur seal conducted under the Endangered Species Act of 1973, and published in the **Federal Register** on March 6, 1985 (50 FR 9232), contained findings on the current population status in relation to its optimum sustainable population (OSP). Since the current population is below 50 percent of the levels observed in the 1940s and early 1950s, the population is believed to be below a level which can maintain maximum net productivity, the lower bound of the OSP range as defined at 50 CFR 216.3.

A finding of depletion is a condition precedent to regulation of a subsistence harvest under section 101(b) of the MMPA, but not the FSA. Accordingly, such a finding need not be part of this rule issued under the authority of section 105 of the FSA. As noted by the MMC in its comments on the 1985 rule, the designation of depleted status carries with it certain restrictions which affect the interests of private parties and other Federal and state agencies, and allows the regulation of subsistence rights granted by section 101(b) of the MMPA. Interested parties should, therefore, be provided with an opportunity to review and comment on any proposed designation.

The MMC stated its position that the designation of fur seals as depleted in this instance is mandatory and not optional since the population is below its OSP. The State of Alaska, on the other hand, urged a very careful and thorough review of all available scientific data before any proposal is made on this issue. The State further comments that, "Miscalculations about fur seals will have serious ramifications for management of other resources and for the Pribilof Islanders." They question whether or not population levels attained during the 1940s and early 1950s reflect the actual long-term carrying capacity of the environment for fur seals, and whether or not the annual rate of decline is actually as high as 6 percent.

The NMFS continues to believe that the Pribilof Island portion of the fur seal population is currently below its OSP and is continuing to decline at about 6 percent annually. Accordingly, the NMFS intends, as soon as practicable, but no later than October 1986, to propose a rule listing the fur seal as a depleted species under the MMPA. This proposal will contain summaries of all pertinent scientific information and will be available for thorough public review and discussion prior to a final decision on this designation.

Two commenters questioned the adequacy of the National Environmental Policy Act (NEPA) documentation on the issuance of this rule. Both recommended that an additional EIS be prepared to assess alternatives to the present subsistence harvest. One group complained that the 1985 EIS does not consider a moratorium on the harvest and fails to record the "significant" changes in the seal population and the Aleut community since 1985. One of the four major alteratives considered in the final EIS on the Convention, published in April 1985, is the expiration of the treaty and the beginning of a subsistence-only harvest on both islands. Indeed, the EIS considered the impact of a far larger take of seals than is contemplated under the current management regime, namely, a take of subadult males in the range of 22,000–25,000 annually through 1988. The future of the Pribilof economy is projected through the year 1995 and no significant changes in the economy appear to warrant a revision of information published only last year. The commenter also claims that a supplemental EIS is needed to assess the "substantial effect of the proposed subsistence kill on the seals". The 1985 EIS considered the impacts of a commercial kill of over 22,000 seals. In 1985, only 3,713 were taken. The comment further states that the EA on this rule and the EIS on the Convention failed to evaluate the effects of ingesting toxic chemicals in seal meat. This commenter has written to DOC officials and others on several occasions subsequent to publication of the EIS. Had this concern been brought to our attention during the review period on the EIS, it would have been addressed in the final document. However, based upon the best available information, there is no evidence to suggest that ingestion of fur seal meat in Alaska represents a human health hazard.

The second commenter urges the NMFS to issue a supplemental EIS that focuses solely on the subsistence hunt. They claim that an issue that is not considered in the EIS is the level of need for subsistence use of seal meat. On the contrary, the EIS provides a subsistence need estimate of "up to 12,000 seals" annually and considers the historic and contemporary needs of the Pribilovians for seal meat.

Several commenters criticized NMFS for failing to issue a proposed permanent rule by September 1985, as has been contemplated in the interim rule of July 8, 1985. The anticipated publication date of a proposed permanent rule was designed to accommodate the possibility that formal rulemaking under the MMPA would be necessary to regulate a subsistence harvest. However, the concensus of commenters on the interim rule was that the subsistence provisions of the FSA were controlling and that informal rulemaking under the FSA was appropriate. Despite any delay in issuing the proposed rule, the public has been provided a full review period on the proposal.

Discussion of Regulatory Provisions

Definitions

Several definitions are added to § 215.2 by this rule to accompany the substantive regulatory changes of other sections. Also, the definition of "director" and "convention" are deleted since the former term is obsolete and the latter is defined in the FSA. No modifications of the definitions provided in the proposed rule have been made.

The most important definitional additions are those for "subsistence

uses" and "wasteful manner." The definition of "wasteful manner" is functionally identical to that for the same term used in the MMPA regulations at 50 CFR 216.3. The only modifications are the restriction of the definition to the Pribilof Islands and to the taking of fur seals and a change to conform with the definition of subsistence used in this rule.

The definition of subsistence is taken from section 109(f)(2) of the MMPA. We have chosen to maintain this definition, despite the fact that one commenter wanted to change the definition to emphasize that only those uses customary and traditional in the culture of Alaskan Natives prior to the introduction of the commercial sealing industry may be made of seal parts.

The definition of "handicraft articles" in this rule is functionally identical to that contained in 50 CFR 216.3 for "authentic native articles of handicrafts and clothing". Two commenters opposed the use of the term "Alaska Natives" rather than Pribilovians in § 215.2(e)(1). They claim that this definition will encourage creation of new handicraft industries and allow greater exploitation of fur seals. One considered this a "loophole" by which Pribilovians could be allowed to profit from the subsistence hunt. A native group, on the other hand, claimed that because of long-term government regulation of the islands, Pribilovians did not develop handicrafts to the same degree as other Alaskan Natives. They thought the definition should encompass crafts practiced by any "Northern natives", not just Pribilovians. One commenter asked why the proposal requires that handicraft articles be commonly produced on or before October 14, 1983, rather than December 21, 1973, the date of enactment of the MMPA. Section 103(b) of the FSA which deals with the subsistence taking of fur seals was enacted on October 14, 1983. Thus, it was thought that this was a more appropriate cut off date. This commenter further inquired whether tanned hides qualify as handicraft articles under this definition. Hides which have been sewn, beaded or otherwise handicrafted clearly would fit within the definition of handicraft articles. More problematical is whether hides that have merely been tanned qualify as handicrafts. Most hides, however, are likely to have had some further work done on them, such as sewing and hooping. Non-natives who may want to purchase hides under the handicraft provisions should be alert to the fact that it is possible that they may not later sell those hides if they have been altered in such as way as to change their native handicraft character.

Conforming Provisions

The penalty provisions of § 215.3 are amended to bring them into conformity with changes made to the enforcement section of the FSA in 1983. No changes are made from the proposed rule.

Subsistence Harvest of Fur Seals

Section 215.31. Section 215.31 states the general conditions under which fur seals may be harvested by Probilovians. As noted above, the MMPA management scheme contained in section 109(f)(2), and referenced in section 103 of the FSA, is adopted in this rule. Its definition of subsistence provides the most harmonious resolution of the conflicting provisions of the two Acts. Under this proposed rule, permissible takings must be for subsistence uses as defined in section 109(f)(2) of the MMPA and § 215.2(h) of this rule. Subsistence uses include the customary and traditional use of fur seals for food, shelter, fuel, clothing, tools, or transportation. The definition also specifies that seal parts may be used for barter or sharing for personal or family consumption. Additionally, handicraft articles may be made and sold if they are fashioned from nonedible byproducts of marine mammals taken for personal or family consumption.

Section 215.31(b) requires that any takings may not be accomplished in wasteful manner. The harvest will be suspended in accordance with § 215.32(e) if it is determined that the harvest is being conducted wastefully. There are three facets to the definition of the term "wasteful manner". First, it means any taking which is likely to result in the killing of fur seals beyond those needed for subsistence purposes. Second, wasteful manner includes takings which result in the waste of a substantial portion of the fur seal. Lastly, it means the employment of a taking method which is not likely to assure the killing and retrieval of the fur seal.

The harvesting method employed by the Pribilovians has been shown to be a very effective means of taking fur seals that virtually guarantees that the targeted seals will be killed and retrieved. Provided that the traditional harvesting techniques are followed, the provisions of the last facet of the wasteful manner definition is clearly satisfied.

In order to determine it taking is wasteful under the first criterion, the level of taking which is necessary to meet the subsistence needs of the Pribilovians must be established. However, it should be noted that the second standard of wastefulness closely relates to this determination. Since no one target number can be set for the subsistence needs, based on available information, the NMFS believes that the best way to ensure that the harvest is accomplished in a non-wasteful manner is to provide an estimate of anticipated needs and to continue to monitor the use of those seals which are taken to see that substantial use of each sell is made. Guidance on what is considered to be substantial use of fur seal is given above in the discussion of public comments on the proposed rule.

In developing its estimate of subsistence needs on the Pribilofs, NMFS considered the following information. Since the commercial harvest of fur seals on the Pribilof Islands historically exceeded the subsistence needs of the Pribilovians, no accurate record of the extent of that need was developed. Whereas the levels of the commercial harvest were documented each year, no such figures were kept concerning the eventual fate of non-commercial seal parts. The excess availability of seal carcasses for subsistence resulted in the selective use of prime seal meat portions and the discard or other use of less desirable parts.

Prior to the 1985 subsistence harvest, the NMFS had limited data on the amount of seal meat actually consumed by Pribilovians. Estimates presented in the preamble to the interim rule were derived from a variety of historical records, from extrapolations based on certain subsistence use data recently recorded for St. George Island, and from contemporary testimony and written reports provided by the Pribilovians. Two assumptions were used to derive the subsistence use estimates cited in the 1985 rule: (1) that the current *native* population is 483 on St. Paul Island and 153 on St. George Island (U.S. Bureau of Census, 1980); and (2) that a subadult male fur seal dresses to 25 pounds of meat. *See* Hearings before the Committee on Expenditures in the Department of Commerce, "Investigations of the Fur Seal Industry", 63rd Cong. 2d Sess., (1914) at 514.

Estimates of the annual subsistence need for fur seals by Pribilovians published in the 1985 interim rule ranged from 3,358 to over 15,000 seals. During the 15 day subsistence harvest on St. Paul Island in 1985, 3,384 subadult seals were taken. About 80 percent were 3-year-olds and all but five were males. A detailed report on the 1985 harvest has

been provided by Drs. Steven T. Zimmerman and James D. Letcher. Dr. Zimmerman is the Chief of the Marine Mammals and Endangered Species Division, Alaska Region, NMFS. Dr Letcher is a private veterinarian (currently affiliated with the Baltimore Zoo) who agreed to observe the 1985 subsistence harvest on St. Paul. (*See* Zimmerman and Letcher, A Report on the 1985 Subsistence Harvest of Northern Fur Seals on St. Paul Island, Alaska, *Marine Fisheries Review*, In Press).

The total weight of meat taken on St. Paul Island for subsistence purposes was 93,435 lbs. An unmeasured percentage of this total was taken each day for immediate personal consumption. The remainder was sent to St. George Island (about 18,000 lbs.), sent to other Aleut Villages (about 4,000 lbs.), or preserved for use on St. Paul Island by salting (about 8,500 lbs.) or freezing (about 50,000 lbs.). Approximately 10,500 lbs. of the meat sent to St. George Island spoiled. An estimated 7,500 lbs. of the meat on St. Paul Island spoiled before it could be preserved. In both cases spoilage resulted from packing meat into large boxes while it was still too warm.

An average of 27.5 lbs. of meat (with bone) was butchered from each seal. This is 43.8 percent of the total mean weight of a harvested seal (62.8 lbs.) and 55.7 percent of the seal's weight minus pelt and attached blubber (49.4 lbs.). During the 1984 commercial harvest, Dr. Zimmerman had observed that front flippers, hearts, livers, and shoulders comprised most of what was taken from the seal carcasses for consumption. During the 1985 season, Dr. Zimmerman was able to determine that the combined weights of these most prized parts constituted 30 percent of the animals by weight. The difference between the 43.8 percent use of carcasses in 1985 and the estimated 30 percent use of some carcasses in 1984 is due to the fact that backs, ribs, and chests were taken in 1985 in addition to flippers, hearts, livers, and shoulders. The relatively high yield of meat (27.5 lbs.) from each animal killed during 1985 appeared to result from diligent efforts by the Pribilovians to avoid wasting any potentially utilizable meat during the butchering process.

After losses due to spoilage and transfer to other villages, about 64,000 lbs. of seal meat remained available for subsistence on St. Paul Island at the conclusion of the 1985 harvest. This would allow for a theoretical annual daily consumption of approximately 0.4 lbs. of seal meat (with bone) per person per year. The amount of meat harvested per person was less than that recorded in other northern and western Alaska villages which depend on subsistence lifestyles.

During the week of March 2, 1986, the NMFS conducted on informal survey of subsistence use of seal meat taken on St. Paul Island. About two-thirds of the approximately 50,000 lbs. of meat stored in the community freezer from the 1985 harvest is believed to remain on the island. About 80 percent consists of ribs and back portions. Some native leaders have concluded that only the front flippers, liver, hearts, and shoulders are desired for subsistence purposes, and that these are the seal parts that have been traditionally used for island subsistence.

The NMFS representatives that will be on the Pribilof Islands during the annual harvest will collect three types of information to aid in making the findings required by § 215.32(e). Each day it will be noted how many seals are killed. Then, with the cooperation of the Pribilovians, the NMFS officials will weigh a representative sample of carcasses before and after meat has been removed for human consumption. This will be done to estimate the percent use that is being made of seals. At the end of each day's harvest, a visual survey will be made of the remaining carcasses to see that substantial utilization has been made of each animal taken. If this monitoring program indicates that the carcasses are not being utilized or that the subsistence needs of the islanders have been satisfied, the Assistant Administrator must exercise his authority under § 215.32(e) to suspend the harvest.

During the period of the harvest, an unbiased estimate of the average percentage of utilization of seal carcasses will be made. Based upon a daily random sample of approximately 10–20 percent of all seals killed, the following data will be collected:

1. The weight of the animals immediately following exsanguination,
2. The weight of the pelt with blubber still attached, if pelts are removed in such a way to make this measurement possible and
3. The weight of organs and tissues not removed for food purposes.

Restrictions on Taking

Comments received from St. George Island noted that a harvest of 309 seals on that island was insufficient to satisfy the residents' subsistence needs and stressed that it was unlikely that sufficient seal meat to make up the shortfall could be obtained from St. Paul without incurring substantial costs. Since, as discussed above, the research project on St. George is evolving in response to changing circumstances and need not be terminated to accommodate a limited but increasesd subsistence take on St. George, the NMFS intends to lift the quota on St. George and allow a full subsistence harvest. Last year, to mitigate the effects of the low harvest level on St. George, NMFS provided transportation between the islands to augment the seal meat supply from St. Paul. Federal funds for such transport are not available this year. Also, the St. George residents have indicated a preference for fresh seal meat rather than that brought in from St. Paul.

Several other modifications have been made to § 215.32. Most of these are required to provide for the full-scale subsistence harvests to be conducted on both St. George and St. Paul Islands. In response to comments requesting further guidance on how the determination will be made that subsistence needs have been met, § 215.32(b) and (e)(1)(iii) have been added. Procedures have also been added under which the harvest may be extended if it is determined that subsistence needs have not been met by August 8. Section 215.32 has been reorganized to accommodate these changes.

Section 215.32(a) is a new provision necessitated by the decision to allow full subsistence harvests on St. Paul and St. George Islands. Its provisions specify that the harvests on the two islands be treated independently. Separate harvest estimates will be provided for each island and any determination made by the Assistant Administrator or NMFS representatives will apply only to the island for which it is made. For example, any decision to suspend, terminate, or extend the harvest on St. George will have no effect on the St. Paul harvest.

As indicated above, § 215.32(b) is a new section added to aid the Assistant Administrator in determining when the subsistence needs of each island have been satisfied. This section establishes a mechanism whereby a harvest level or range will be set prior to each year's harvest. By April 1 of each year, the NMFS will publish in the **Federal Register** a summary of the data obtained from the previous year's harvest and a discussion of the number of seal expected to be needed that year to meet the subsistence requirements of each island. The summary should discuss the duration of the harvest on each island, noting any suspensions or extensions that were issued, provide the numbers of seals taken on each island, assess the utilization of the meat and other fur seal parts, provide any available breakdown

of how the meat was stored (consumed fresh, frozen, or salted), and include any other relevant information. Based upon a discussion of the available information, the NMFS will estimate the number of seals required to satisfy subsistence needs for the current year. This estimate need not provide a single number for each island but may be expressed as a range. As more subsistence harvests are conducted and more data are made available, the uncertainty of these estimates should decrease and, in time, it may be possible to issue precise estimates within a narrow range. A 30-day public comment period will follow publication of the notice in the **Federal Register**. Taking into account any comments received, the NMFS will issue a final notice of estimated harvest levels prior to June 30 of each year, the starting date for the harvest.

The procedures contained in § 215.32(b) were not in place for the 1986 harvest, but similar procedures were followed through the issuance of the proposed and final rules. The preamble to the proposed rule contained a summary of the 1985 harvest and a discussion of the number of seals expected to be taken to meet the subsistence needs of the Pribilovians in 1986. However, the ranges discussed were not for the individual islands. Several commenters representing a spectrum of viewpoints addressed the 1986 harvest level and many provided their own calculations. Assuming identical per capita subsistence requirements on St. George and St. Paul Islands and taking into account the data from the 1985 harvest and public comments, the NMFS has arrived at the following subsistence estimates:

St. Paul—2,400–8,000

St. George—800–1,800

(See previous discussion for the derivation of these estimates.)

With slight modifications, § 215.32(c) is taken from § 215.32(b) of the proposed rule. Subsection (c)(1) retains the June 30 date for the opening of the harvest. This date is not applicable to both islands. Under the proposed rule no harvest season was provided for St. George Island because of the small numbers of seal allowed to be harvested there. Prior to June 30, very few harvestable seals are present on the Pribilofs and an earlier season will not significantly increase the availability of seal meat. To minimize the costs of monitoring the harvest and ensure that data derived from the 1986 and future harvests are comparable to the existing data base, the June 30 date was adopted.

Section 215.32(c)(2) is derived from § 215.32(b)(1) of the proposed rule. The requirements that only experienced sealers may take seals and that the killing be by stunning with a sharp blow to the head with a long club, followed immediately by exsanguination, are retained. Limiting the harvest to these traditional techniques will help ensure that only humane methods are used to take seals. The use of organized drives of fur seals to killing fields was developed for use in the large scale commercial harvest and, if small numbers of seal are harvested, less disturbance to the rookeries may result by using alternative methods of separating the subadult males to be harvested from the other seals. The final rule requires the traditional method of organized drives to be used unless the NMFS representatives, in consultation with the Pribilovians conducting the harvest, determine that alternative methods will not result in increased disturbance to the rookery. This determination will be made informally and will vary depending on the number of seals to be harvested, topography of the rookery, and the placement within the rookery of the seals to be harvested.

The use of organized drives has resulted in a very low risk of taking female seals. Since the discontinuation of the female harvest in 1968, this harvesting method has resulted in an accidental taking of females below one half of one percent of the total take. Using organized drives on St. Paul Island in 1985, only five females were taken out of a total harvest of 3,384 seals. Section 215.32 (c)(2), therefore, requires that the use of alternative harvesting methods, even if less disruptive to the rookeries than organized drives, may not be used if they lead to the taking of female seals above historical levels.

The provisions of § 215.32(c)(3) adopt the prohibitions against harvesting adult fur seals and pups and intentionally harvesting subadult female fur seals that were contained in § 215.32(b)(2) of the proposed rule. These prohibitions are based upon the recommendations of the Scientific Committee of the Fur Seal Commission, which, since 1969, has opined that only the subadult male portion of the population should be harvested. Because of the difficulties in distinguishing between immature male and female seals, the rule provides for the occasional accidental taking of subadult female fur seals so long as the historic low level of females taken is maintained. The intentional taking of female fur seals is not authorized by this rule under any circumstances.

Section 215.32(c)(4) specifies that only subadult male fur seals 124.5 centimeters (49 inches) or less in length may be taken. This restriction, contained in § 215.32(b)(3)(i)(C) and (ii)(B) of the proposed rule, establishes the size range for harvestable male seals. The result is to confine the harvest to primarily 2, 3, and 4-year-old males.

Section 215.32(c)(5) carries forward the provisions of § 215.32(b)(2)(i)(D) of the proposed rule. To aid researchers studying the causes of the fur seal population decline and conducting other scientific investigations, seals that have been tagged or which are entangled in debris such as fishing nets or packing bands may only be taken if so directed by scientists studying fur seal entanglement.

Under the provisions of the proposed rule, the NMFS suggested a five day per week harvest schedule on St. Paul Island and set a maximum harvest schedule of two drives per week on St. George Island. In response to comments from Aleut groups on both islands, the NMFS recognizes the primary responsibility of the Pribilovians in scheduling the harvest. Section 215.32(d) provides that, with some restrictions, the scheduling of the harvests is at the discretion of the Pribilovians. With the increased harvest season and adoption of a family hunt, daily harvests may not be required. However, this would depend upon the numbers of seals taken per day.

The first of the restrictions on scheduling mandates that the harvest operations be timed so as to minimize stress to the harvested seals. Drives have traditionally been conducted only in early morning hours when the temperature is low and the stress placed upon the seals is minimal. It may be that alternative harvest techniques may be developed under § 215.32(c)(2) that do not stress the harvested seals as much as the traditional drives. If this were the case, other harvest hours could be chosen. Even if organized drives are used in the harvest, other times of the day may be chosen if they do not result in increased stress to the seals. For example, the Pribilovians could schedule some harvests for the cool morning hours and others in the evening when temperatures have dropped. In any event, setting the schedule must be done sufficiently in advance and notice given to the NMFS representative to allow for the conducting of the necessary monitoring activities.

Although no schedule is mandated under § 215.32(d) certain rookeries and harvest maxima are specified. In

accordance with a recommendation from the NMML, Little Polivia on St. Paul was dropped from the list of acceptable harvest sites. The NMML also recommended that only the haulout sites of Northeast and Zapadni be harvested on St. George Island. This recommendation is also adopted in the final rule.

On St. Paul Island none of the seven specified haulout areas may be harvested more than once per week. This provision means that only one intrusion of each rookery may be made per week. It does *not* mean that a haulout area may be designated as the harvest locality for a particular day with repeated visits by small groups of harvesters throughout the day. Once the harvest has been carried out at an rookery it may not be visited by the harvesters until the following week regardless of whether everyone who wanted to take seals was present. Because of this limitation, the scheduling of the harvests and publication of the agreed upon schedule throughout the communities is particularly important. This restriction addresses the primary concern enunciated by the NMML that the "main objective of any harvest regulations must be to minimize disturbances, especially to rookery areas." It also ensures that no rookery is over harvested, allowing a proportion of the subadult males to escape the harvest by being at sea.

The NMML also recommended that the take at each hauling ground on St. Paul be approximately in proportion to the level of take for that hauling ground during the last commercial harvest. For example, the NMML recommends that seals taken from Reef hauling ground constitute 25 percent of the harvest. There is some concern that harvesting an equal number of seal from each haulout area irrespective of its relative size may cause some shifts in the population away from the smaller sites. The NMFS scientists intend to study any shifts in the population that may result from the particular harvest levels at the hauling grounds and recommend any changes to the scheduling provisions that they deem necessary. The St. Paul residents should be mindful of the concern expressed by the NMML when scheduling the harvesting rotation. If at all possible, the larger haulout areas should be visited on those days when it is thought that more seals will be desired.

On St. George Island, seals may be harvested only at the haulout areas of Northeast and Zapadni. Because only two harvest sites are available, each site may be visited twice per week. As with St. Paul, this limitation applies to the number of intrusions of the hauling ground allowed. All persons wishing to take seals at a particular site must be there at the same time. Multiple entries into a haulout site, even if on the same day, will be considered to be separate harvests.

Under the terms of § 215.32(e) there are three situations in which the Assistant Administrator is required to suspend the harvest: (1) if he determines that the subsistence needs of the Pribilovians on the island have been satisfied, (2) if he determines that the harvest is otherwise being conducted in a wasteful manner, or (3) when the lower bound of the range of the estimated subsistence level for the island provided in the **Federal Register** notice issued under § 215.32(b) is reached. The first two criteria are taken from § 215.32(a) of the proposed rule with one alteration. Under the proposed rule, the Assistant Administrator was *authorized* to suspend the harvest. NMFS has adopted in the final rule the suggestion of one commenter that the Assistant Administrator be *required* to suspend the harvest as more clearly portraying the Assistant Administrator's responsibility. Once a determination under subsection (e)(1) (i) or (ii) has been made, the Assistant Administrator has a nondiscretionary duty to suspend the harvest.

If the harvest is suspended because of a determination that the subsistence needs of the islanders have been satisfied, the harvest may not resume unless new information indicates that this determination was incorrect. In effect, the harvest for the island is terminated for the year once its subsistence requirements have been met.

A suspension based upon a determination that the harvest is being conducted in a wasteful manner, other than by exceeding the islander's subsistence needs, may be lifted upon showing that the conditions which led to the determination have been remedied. For example, the Assistant Administrator would be required to suspend the harvest if he determined that meat was being wasted through the use of ineffective preservation techniques. If the Pribilovians switched to an alternative method of preservation that would not constitute waste or decided only to harvest meat for immediate consumption, the suspension could be lifted.

The provisions of § 215.32(e)(1)(iii) and (e)(3) implement the determination of anticipated subsistence needs made in accordance with the procedures of § 215.32(b). Section 215.32(e)(1)(iii) requires that the harvest be temporarily suspended when the lower end of the estimated subsistence level for the island is attained. Under § 215.32(e)(3), the duration of the suspension may not exceed 48 hours. This period was chosen because it should provide enough time to allow the appropriate information to be reviewed and should not cause an inordinate period of inconvenience or delay to the Pribilovians. During this period, the Assistant Administrator will review the available harvest data to determine if the subsistence needs of the Pribilovians have been met. If they have, he will suspend the harvest as provided for in § 215.32(e)(1)(i). The decision to terminate or continue the harvest will be based on a variety of factors, including how much meat has been consumed fresh, the rate of consumption, how much meat has been preserved, and how much of the season remains. If, for example, virtually all of the seal meat from the projected harvest level has been consumed early in the harvest season and very little has been frozen or salted, a good case can be made that the actual subsistence needs of the island exceed the lower range of the estimate. If on the other hand, it is late in the harvest season and a significant proportion of the seal meat has been stored for subsequent use rather than consumed fresh, a finding that the subsistence needs have been satisfied may well be in order. If the Assistant Administrator finds that the subsistence needs of the Pribilovians have not been met, he must provide a revised estimate of the island's subsistence needs based upon the harvest data and any other appropriate factors.

It should be noted that despite the addition of § 215.32(b), (e)(1)(iii), and (e)(3), NMFS still intends to monitor the harvest on a continuous basis and will make a determination that the subsistence needs of either island have been met, if warranted, whether or not the lower bound of the estimate are ever reached. Setting a range does not give the Pribilovians carte blanche to harvest up to that number of seals. As discussed previously, the subsistence needs of the Aleuts may fluctuate from year to year and, thus, an estimate of need may be either too high or too low. The procedures adopted in the final rule are intended to foster public participation in establishing a reasonable estimate of subsistence needs and to trigger special, considered review when a credible case can be made that the islands'

subsistence requirements have been satisfied.

Section 215.32(f) provides criteria for terminating the harvest or, in the alternative, extending the harvest if subsistence needs have yet to be fulfilled. Section (f)(1) follows two triggers for terminating the harvest set forth in § 215.32(b)(3)(i)(A) of the proposed rule. The Assistant Administrator will terminate the harvest when he determines that the subsistence needs of the Pribilovians have been satisfied or, in the alternative, the harvest will terminate on August 8 of each year. This date was chosen to avoid an unacceptable taking of female fur seals. After the first week in August, immature fur seals of both sexes begin to arrive on St. Paul Island in significant numbers Also, the harem structure breaks down in early August and many females begin using the haulout areas. Extending the harvest period could result in a marked increase in the accidental take of female seals without additional controls on harvest methods. As illustrated by the population decline which coincided with the female harvests of the 1950s and 1960s, any increase in the taking of females is likely to have a detrimental effect on the fur seal population.

As noted above, an increased risk of taking female fur seals exists if the harvest goes beyond the first week of August. However, the Pribilovians contend that experienced sealers can readily distinguish between male and female subadult fur seals and that the risk of taking female seals beyond August 8 is overstated by NMFS. The NMFS believes that there are advantages to conducting a more measured harvest, taking seals at a slower rate for a longer period of time. If more fresh seal meat can be consumed, it is less likely that preserved meat stocks will exceed or fall short of actual subsistence needs. Therefore, § 215.32(f)(2) authorizes the Assistant Administrator to extend the harvest until September 30 if, by August 8, the subsistence needs of the island have not been fulfilled and the number of females taken remains low. An extension will be terminated if, before its expiration, it is determined that the subsistence needs of the Pribilovians have been met.

The final rule contains two standards of an unacceptable take of female seals that will trigger the termination of the harvest even though an extension was issued. The first of these is when the total number of female seals taken during the harvest exceeds one half of one percent of the the total number of seals taken. For example, if the total harvest on one island were 2500 seals the harvest would be terminated when 13 females had been taken. Although the percentage of females taken on St. Paul last year was only 0.14 percent, data compiled over several years of the commercial harvest and the St. George harvest indicate that a higher allowance for females be set. The highest percentage of females (2.0 percent) recorded in harvest data since 1969, when an "all male" harvest was resumed, was the St. George harvest of 1978 when six females were taken out of a total harvest of 298 seals. The range of other percentages of females taken falls between 0.0 and 0.6 percent.

The second measure of an unacceptable increased taking of females is the absolute number of females taken during the period of the extension. This allows NMFS to close the harvest when it first becomes apparent that the risk of taking females is substantially heightened. The Assistant Administrator need not allow the Aleuts to continue to take an unacceptable level of female seals waiting for the percentage set forth in section (f)(2)(ii) to be attained. Any time during the extension that five female seals are taken within a seven consecutive day period, the harvest will be terminated.

Five was chosen as the limit because it is presumably large enough to allow for statistical swings in the harvest data that are the result of chance but do not indicate an increased risk to female seals, yet low enough to trigger cessation of the harvest when it becomes apparent that a significant rate of females is being taken. To use last year's harvest data as an example, had there been an extension beyond August 8 and five females had been taken within a one week period, this provision would have operated to close the harvest before the one half of one percent level was reached.

Disposition of Fur Seal Parts

Section 215.33 governs the disposition of fur seal parts derived from the Pribilof Islands harvest and is based upon section 109(f)(2) of the MMPA. Fur seal parts, including edible parts, may be transferred from the taker to other Alaskan Natives. As some commenters pointed out, the language of the proposed rule would have allowed the sale of all seal parts to Alaskan Natives, a result clearly at odds with section 109(f)(2). The final rule clarifies that only barter or sharing of edible portions between Alaskan Natives is authorized; no sales of these parts, even among Alaskan Natives, is permitted. The only sales authorized under section 109(f)(2) are the selling of handicraft articles fashioned from nonedible byproducts of seals taken for personal or family consumption. The final rule provides that the only allowable permanent transfer of seal parts to non-Natives is of finished handicraft articles. Certain temporary transfers of seal parts to non-Natives are also permitted under the terms of this regulation. Non-Natives may be registered under 50 CFR 216.23(c) as agents or tanners and may temporarily possess seal parts to carry out those functions so long as the parts ultimately are returned to an Alaskan Native for conversion into handicraft articles. Similar accommodations are provided in NMFS's MMPA native taking regulations. Additionally, NMFS adopts a broad interpretation of the provision which allows the creation and sale of handicrafts. Under § 215.33(c), nonedible seal parts may be sold to other Alaskan Natives if the purpose of the sale is for the conversion of the seal part into a handicraft article. This interpretation of the statutory language is particularly appropriate in this instance since the Pribilovians were denied the opportunity to develop an extensive handicraft tradition during the period of the commercial harvest.

Several commenters expressed a belief that these regulations should allow the sale of raw fur seal parts for commercial utilization. They argued that to do otherwise would result in the wasteful taking of fur seals, since it is conceivable that the valuable pelts may go unused. Other commenters expressed the opinion that no commercial use of seal parts, aside from handicrafts, be permitted since it would result in inflated claims of subsistence needs. As explained elsewhere in the preamble to this rule, the subsistence use definition section 109(f)(2) of the MMPA limits the commercial use of marine mammal parts to sales in connection with handicraft articles.

In § 215.33 (b) and (c) of the proposed rule, the term "Native Alaskan" was inadvertently used instead of "Alaskan Native". The use of the former term was in no way intended to allow transfers under these provisions to anyone but Alaskan Natives. The term "Alaskan Native" has been substituted in the final rule.

Cooperation With Federal Officials

NOAA's fur seal research program has yielded much valuable data necessary for the management and conservation of the fur seal, and a major goal of the program has been to determine the cause of the continuing decline in the fur seal population. Data

from the harvest have been used to monitor the rate of entanglement in debris and to determine body weight, body length, tooth size, levels of toxic substances, and changes in the age structure of the male portion of the population. These data are also used to assess the status of the population, to monitor population trends, to evaluate rates of population interchange between the islands, and to seek explanations for the observed dynamics of the population. The harvest has also been used to retrieve tags applied for various research purposes.

To insure that new data comparable to existing data and not confounded by procedural changes, it was deemed advisable, in the 1985 interim rule, to maintain as much continuity in the harvest methods as possible. Where possible, every effort was made to ensure that the specific procedures of the subsistence harvest follow historic practices. This rule seeks to continue the accommodation of the research program to the extent possible. However, greater latitude in choosing harvest days and location is being provided.

Applicability of the Rule

In accordance with section 103(b) of the FSA, only Pribilovians are authorized to engage in the land based harvesting of fur seals. All other Native Alaskans who harvest fur seals must conform to the provisions of section 103(a) of the FSA which allows fur seals to be taken only from canoes not propelled by motors and manned by not more than five persons each.

This rule places no reporting requirements upon the Pribilovians. However, § 215.34 requires those who take fur seals to cooperate with NMFS representatives in compiling scientific information and other data regarding the extent of taking and uses to which seal parts are being put. As well as providing the continuation of vital fur seal research, this information is essential to the Assistant Administrator's monitoring of the harvest and will be used to determine the point at which subsistence needs have been satisfied. These data may also be used as evidence that the harvest is or is not otherwise being conducted in a wasteful manner.

At the suggestion of the MMC, § 215.34 has been modified in the final rule to clarify that the Pribilovians are required to cooperate with scientists who are recording tag data or *other* data.

Classification

The NMFS prepared an environmental assessment (EA) of this rule and concluded that it will result in no significant impacts on the environment other than those already discussed in the final environmental impact statement (EIS) on the Interim Convention on Conservation of North Pacific Fur Seals, published in April 1985. Copies of the EA/EIS may be obtained by writing to the address listed above.

The NOAA Administrator determined that this rule is not a "major rule" requiring a regulatory impact analysis under Executive Order 12291. The General Counsel of the Department of Commerce certified to the Small Business Administration that this rule not have a significant economic impact on a substantial number of small entities. As a result, a regulatory flexibility analysis was not prepared. This rule does not contain a collection of information requirement subject to the Paperwork Reduction Act.

Due to the potential adverse effect on the seal population which would result from a delay in issuing final regulations governing the subsistence harvest, good cause justifies the promulgation of this final rule on an emergency basis. It is impracticable and contrary to the public interest to delay the effective date of these emergency final regulations. Therefore, these regulations shall become effective upon delivery to the **Federal Register**. A 30-day public review and comment period was provided on the proposed rule published on May 15, 1986 (51 FR 17896).

This emergency rule is exempt from the normal review procedures of Executive Order 12291 as provided in Section 8(a)(1) of the Order. This rule is being reported to the Director of the Office of Management and Budget, with an explanation of why it is not possible to follow the procedures of that Order.

List of Subjects in 50 CFR Part 215

Administrative practice and procedure; Marine mammals, Penalties, Pribilof Islands; Reporting and recordkeeping requirements.

Dated: July 3, 1986.

Joseph W. Angelovic,

Deputy Assistant Administrator for Science and Technology, National Marine Fisheries Service.

PART 215—[AMENDED]

Accordingly, 50 CFR Part 215 is amended as follows:

1. The authority citation for Part 215 is revised to read as follows:

Authority: 16 U.S.C. 1151–1175, 16 U.S.C. 1361–1384.

2. Section 215.2 is revised to read as follows:

§ 215.2 Definitions.

In addition to definitions contained in the Act, and unless the context otherwise requires, in this Part:

(a) *Act* means the Fur Seal Act, as amended, 16 U.S.C. 1151–1175.

(b) *Alaskan Native* has the identical meaning under this section as in 50 CFR 216.3.

(c) *Assistant Administrator* means the Assistant Administrator for Fisheries, National Marine Fisheries Service, National Oceanic and Atmospheric Administration, U.S. Department of Commerce.

(d) *Fur seal* means North Pacific fur seal, scientifically known as *Callorhinus ursinus*.

(e) *Handicraft articles* means items made by an Indian, Aleut, or Eskimo from the nonedible byproducts of fur seals taken for personal or family consumption which—

(1) Where commonly produced by Alaskan Natives on or before October 14, 1983, and

(2) Are composed wholly or in some significant respect of natural materials, and

(3) Are significantly altered from their natural form and which are produced, decorated, or fashioned in the exercise of traditional native handicrafts without the use of pantographs, multiple carvers, or similar mass copying devices.

Improved methods of production utilizing modern implements such as sewing machines or modern tanning techniques at a tanner registered under 50 CFR 216.23(c) may be used so long as no large scale mass production industry results. Traditional native handicrafts include, but are not limited to, weaving, carving, stitching, sewing, lacing, beading, drawing, and painting. The formation of traditional native groups, such as a cooperative, is permitted so long as no large scale mass production results.

(f) *Public display* means, with respect to fur seals, display, whether or not for profit, for the purposes of education or exhibition.

(g) *Pribilovians* means Indians, Aleuts, and Eskimos who live on the Pribilof Islands.

(h) *Subsistence uses* means the customary and traditional uses of fur seals taken by Pribilovians for direct personal or family consumption as food, shelter, fuel, clothing, tools or transportation; for the making and selling of handicraft articles out of nonedible byproducts of fur seals taken for personal or family consumption; and

for barter, or sharing for personal or family consumption. As used in this definition—

(1) *Family* means all persons related by blood, marriage, or adoption, or any person living within a household on a permanent basis.

(2) *Barter* means the exchange of fur seals or their parts, taken for subsistence uses—

(i) For other wildlife or fish or their parts, or

(ii) For other food or for nonedible items other than money if the exchange is of a limited and noncommercial nature.

(i) *Wasteful manner* means any taking or method of taking which is likely to result in the killing of fur seals beyond those needed for subsistence uses or which results in the waste of a substantial portion of the fur seal and includes, without limitation, the employment of a method of taking which is not likely to assure the capture or killing of a fur seal or which is not immediately followed by a reasonable effort to retrieve the fur seal.

3. Section 215.3 is revised to read as follows:

§ 215.3 Penalties.

(a) *Criminal penalties.* Any person who knowingly violates any provision of the Act or of any permit issued thereunder or regulation contained in this Part will, upon conviction, be fined not more than $20,000 for such violation, or be imprisoned for not more than one year, or both.

(b) *Civil penalties.* Any person who violates any provision of the Act or of any permit issued thereunder or regulation contained in this Part may be assessed a civil penalty of not more than $10,000 for each such violation.

4. Subpart D is revised to read as follows:

Subpart D—Taking for Subsistence Purposes

Sec.
215.31 Allowable take of fur seals.
215.32 Restrictions on taking.
215.33 Disposition of fur seal parts.
215.34 Cooperation with federal officials.

Subpart D—Taking for Subsistence Purposes

§ 215.31 Allowable take of fur seals.

Pribilovians may take fur seals on the Pribilof Islands if such taking is

(a) For subsistence uses, and

(b) Not accomplished in a wasteful manner.

§ 215.32 Restrictions on taking.

(a) The harvests of seals on St. Paul and St. George Islands shall be treated independently for the purposes of this section. Any suspension, termination, or extension of the harvest is applicable only to the island for which it is issued.

(b) By April 1 of each year the Assistant Administrator will publish in the **Federal Register** a summary of the preceding year's harvest and a discussion of the number of seals expected to be taken that year to satisfy the subsistence requirements of each island. Following a 30 day public comment period, but before the start of the harvest, a final notice of the expected harvest levels will be published.

(c)(1) No fur seal may be taken on the Pribilof Islands before June 30 of each year.

(2) No fur seal may be taken except by experienced sealers using the traditional harvesting methods, including stunning followed immediately by exsanguination. The harvesting method shall include organized drives of subadult males to killing fields unless it is determined by the NMFS representatives, in consultation with the Pribilovians conducting the harvest, that alternative methods will not result in increased disturbance to the rookery or the increased accidental take of female seals.

(3) Any taking of adult fur seals or pups, or the intentional taking of subadult female fur seals is prohibited.

(4) Only subadult male fur seals 124.5 centimeters or less in length may be taken.

(5) Seals with tags and/or entangling debris may only be taken if so directed by NMFS scientists.

(d) The scheduling of the harvest is at the discretion of the Pribilovians, but must be such as to minimize stress to the harvested seals. The Pribilovians must give adequate advance notice of their harvest schedules to the NMFS representatives to allow for necessary monitoring activities. Scheduling must be consistent with the following restrictions:

(1) *St. Paul Island*—Seals may only be harvested from the following haulout areas: Zapadni, English Bay, Northeast Point, Polovina, Lukanin, Kitovi, and Reef. No haulout area may be harvested more than once per week.

(2) *St. George Island*—Seals may only be harvested from the following haulout areas: Northeast and Zapadni. Neither haulout area may be harvested more than twice per week.

(e) (1) The Assistant Administrator is required to suspend the take provided for in § 215.31 when:

(i) He determines, after reasonable notice by NMFS representatives to the Pribilovians on the island, that the subsistence needs of the Pribilovians on the island have been satisfied;

or

(ii) He determines that the harvest is otherwise being conducted in a wasteful manner; or

(iii) The lower end of the range of the estimated subsistence level provided in the notice issued under paragraph (b) is reached.

(2) A suspension based on a determination under paragraph (e)(1)(ii) may be lifted by the Assistant Administrator if he finds that the conditions which led to the determination that the harvest was being conducted in a wasteful manner have been remedied.

(3) A suspension issued in accordance with paragraph (e)(1)(iii) may not exceed 48 hours in duration and shall be followed immediately by a review of the harvest data to determine if a finding under paragraph (e)(1)(i) is warranted. If a the harvest is not suspended under paragraph (e)(1)(i), the Assistant Administrator must provide a revised estimate of the number of seals required to satisfy the Pribilovians' subsistence needs.

(f)(1) The Assistant Administrator shall terminate the take provided for in § 215.31 on August 8 of each year or when it is determined under paragraph (e)(1)(i) that the subsistence needs of the Pribilovians on the island have been satisfied, whichever occurs first.

(2) Notwithstanding the requirements of paragraph (f)(1), the Assistant Administrator may allow taking under § 215.31 if he determines that, as of August 8, the subsistence needs of the Pribilovians have not been met. In this case, the taking of seals may be extended for a period not to exceed September 30. If the harvest is extended beyond August 8, the Assistant Administrator shall terminate the take if:

(i) It is determined under paragraph (e)(1)(i) that the subsistence needs of the Pribilovians on the island have been satisfied; or

(ii) The number of female seals taken since June 30 exceeds one half of one percent of the total number of seals harvested for that island; or

(iii) The number of female seals harvested during any consecutive seven day period after August 8 exceeds 5.

§ 215.33 Disposition of fur seal parts.

Except for transfers to other Alaskan Natives for barter or sharing for personal or family consumption, no part of a fur seal taken for subsistence uses may be sold or otherwise transferred to

any person unless it is a nonedible byproduct which:

(a) Has been transformed into an article of handicraft, or

(b) Is being sent by an Alaskan Native directly, or through a registered agent, to a tannery registered under 50 CFR 216.23(c) for the purpose of processing, and will be returned directly to the Alaskan Native for conversion into an article of handicraft, or

(c) Is being sold or transferred to an Alaskan Native, or to an agent registered under 50 CFR 216.23(c) for resale or transfer to an Alaskan Native, who will convert the seal part into a handicraft.

§ 215.34 Cooperation with federal officials.

Pribilovians who engage in the harvest of seals are required to cooperate with scientists engaged in fur seal research on the Pribilof Islands who may need assistance in recording tag or other data and collecting tissue or other fur seal samples for research purposes. In addition, Pribilovians who take fur seals for subsistence uses must, consistent with 5 CFR 1320.7(k)(3), cooperate with the NMFS representatives on the Pribilof Islands who are responsible for compiling the following information on a daily basis:

(a) The number of seals taken each day in the subsistence harvest,

(b) The extent of the utilization of fur seals taken, and

(c) Other information determined by the Assistant Administrator to be necessary for determining the subsistence needs of the Pribilovians or for making determinations under § 215.32(e).

[FR Doc. 86-15476 Filed 7-3-86; 4:32 pm]

BILLING CODE 3510-22-M

DEPARTMENT OF COMMERCE

National Oceanic and Atmospheric Administration

50 CFR PART 650

[Docket No. 60625-6125]

Atlantic Sea Scallop Fishery

AGENCY: National Marine Fisheries Service (NMFS), NOAA, Commerce.

ACTION: Emergency interim rule.

SUMMARY: NOAA issues an emergency interim rule continuing the management measures for the Fishery Management Plan for the Atlantic Sea Scallop Fishery (FMP) and the implementing regulations which establish a 30 average meat count standard (the number of meats per pound), and a corresponding minimum shell height requirement of 3½ inches for sea scallops landed in the shell. In addition, this rule provides authority to the Regional Director to grant exemptions from the regulations for research purposes. This action is intended to delay implementation of Amendment 1 (amendment) to the FMP in order to provide reasonable opportunity for the industry to comply with the management program, minimize fishing-related mortality on small scallops, and facilitate the development of an alternate management program for the fishery.

EFFECTIVE DATE: July 3, 1986.

FOR FURTHER INFORMATION CONTACT: Carol J. Kilbride, Resource Policy Analyst, 617-281-3600 extension 331.

SUPPLEMENTARY INFORMATION: The FMP was prepared by the New England Fishery Management Council (Council) in consultation with the Mid-Atlantic and South Atlantic Fishery Management Councils. The final rule implementing the FMP established a maximum average meat count standard within a range of 40-25, meats per pound, and a corresponding minimum shell height requirement for sea scallops landed in the shell (August 18, 1982, 47 FR 35990). Enforcement of this standard was limited up to and including the point of first transaction in the United States.

The Council prepared an amendment to the FMP (Amendment 1) which was approved by the NOAA Administrator on October 17, 1985. The amendment established a minimum weight standard, the four-ounce standard, and extended enforcement beyond the point of first transaction. The purpose of the amendment was to reduce the taking of small sea scallops.

The final rule implementing the amendment was to become effective on January 1, 1986 (November 6, 1985, 50 FR 46069). NOAA delayed the implementation of the amendment for a period of 180 days as authorized by section 305(e) of the Magnuson Act in order to avert a severe economic hardship in the fishery (January 3, 1986, 51 FR 208; April 8, 1986, 51 FR 11927; and May 5, 1986, 51 FR 16520). The emergency rule continued the management measure regulations implementing the original FMP and reestablished the 35 meats per pound standard (3⅜ inch shell height requirement).

On May 28, 1986, the Council voted unanimously to forestall the implementation of the amendment through emergency action, and to continue the management measure of the original FMP and the implementing regulations which impose a 30 average meat count standard. The Council believes that this action is necessary due to the tremendous number of small scallops recently recruited into the fishery. Their abundance and distribution will render industry compliance with the minimum weight standard of the amendment very difficult. Council analyses have shown that the 30 average meat count standard achieves essentially the same resource benefits over time as the four-ounce minimum weight standard contained in the amendment.

In light of the Council's concerns over discarding and dredge-induced, non-capture mortality, and recognition that even reasonably conservative fishing practices would not guarantee compliance with the minimum size standard, particularly at sea, the Assistant Administrator finds that an emergency exists within the sea scallop fishery. This determination is further supported by the potential for widespread abandonment of any conservation measures by fishermen if the amendment is implemented against the will of virtually the entire industry. This could result in substantial, yet unnecessary harm to the resource.

The industry finds compliance at sea with a meat weight standard to be difficult at best. Sea conditions frustrate precise compliance with the exacting minimum meat weight standard. Compliance at sea with the average meat per pound standard is also hindered by sea conditions, but much less so. A pound standard is easier to gauge at sea than a four-ounce weight standard. Fishermen can equate a pound of scallops to a reasonable volumetric equivalent (that is, a pound of scallops occupies roughly a pint). Scallops filling the volumetric equivalent to a pound can easily be counted to determine if the sample is in compliance with the specified meat count per pound standard. While this procedure is not "scientifically" accurate, it is reasonably predictive of compliance or non-compliance with the standard, particularly in light of the tolerance built into the enforcement of the standard. On the other hand, compliance with the minimum meat weight standard is very difficult at sea because it demands weighing small scallops. Even with the most accurate scale on board, a fisherman would have great difficulty in weighing a sample to see if it complied with the four-ounce weight standard due to the degree of error resulting from the pitching and rolling of the vessel even under moderate sea conditions.

The Assistant Administrator believes that the 30 average meat count standard responds appropriately to the emergency by balancing the needs of the industry and the resource. While the industry can mix in smaller sea scallops under the 30 average meat count, and thereby reduce discarding to a degree, the range of meat sizes that may be mixed is much narrower than with a 35 or 40 average meat count standard. While discarded scallops have a reasonable chance of survival, dredge-induced, non-capture mortality occurs when the beds are repeatedly dredged to find scallops which comply with the prevailing standard. This practice should occur less under an average meat count standard.

The Assistant Administrator concludes further from the emergency action recommended by the New England Fishery Management Council that reliance on the meat weight standard to conserve and manage the resource is untenable over a long period of time. Factors such as seasonal and areal variations in the weight of scallops, as well as the variability in the shell height to meat weight relationship for those shucking the scallops, make compliance with the meat weight management measures difficult. This is particularly true for the minimum meat weight standard which prescribes that the ten smallest scallops in a one-pint sample weight at least four ounces.

While compliance with either standard represents varying degrees of difficulty for the industry, it is not prudent to abandon both standards without an effective replacement. This could be deleterious to the resource. Therefore, the emergency rule provides the authority to the Regional Director, upon the recommendation of the Council, to allow exemptions to the regulations for the purpose of research to develop alternative management options. The industry, the Council, and the NMFS have all made commitments to promote research, particularly in the area of gear modifications. This research is expected to commence shortly. The emergency research exemption will advance that initiative by allowing the Regional Director to exempt boats involved in gear research from the average meat count. This exemption also will ameliorate the loss of income for boat owners whose boats are involved in the authorized gear research.

NOAA hereby delays for a period of 90 days the implementation of Amendment 1 and implements the current provisions of the FMP which impose a 30-meats-per-pound standard. This action is taken under the authority of section 305(e)(2) of the Magnuson Act.

Classification

The Assistant Administrator for Fisheries, NOAA, has determined that this rule is necessary to respond to an emergency situation and is consistent with the Magnuson Fishery Conservation and Management Act and other applicable laws.

The Assistant Administrator finds that there is the potential for biological impact from increased numbers of undersized sea scallop discards and there is the potential for adverse economic impact as a result of the difficulty of the industry to comply with a minimum meat weight standard. As a result, promulgation of this rule is justified on an emergency basis, and makes it impractical and contrary to the public interest to provide advance notice and opportunity for comment, or to delay for 30 days the effective date of these emergency regulations under the provision of section 553(b) and (d) of the Administrative Procedures Act.

The Assistant Administrator has determined that this rule does not directly affect the coastal zone of any State with an approved coastal zone management program.

Because the nature of this action is to continue the existing regulations implementing the FMP, the Assistant Administrator has determined that it is categorically excluded from the requirement to prepare an environmental document, as provided by NOAA Directive 02-10.

This emergency rule is exempt from the normal review procedures of Executive Order 12291 as provided in section 8(a)(1) of that order. This rule is being reported to the Director of the Office of Management and Budget, with an explanation of why it is not possible to follow the procedures of that order.

This rule does not contain a collection of information requirement subject to the Paperwork Reduction Act.

This rule is exempt from the procedures of the Regulatory Flexibility Act because the rule is issued without opportunity for prior public comment.

List of Subjects in 50 CFR Part 650

Fisheries, Reporting and recordkeeping requirements.

Dated: July 2, 1986.

Carmen J. Blondin,

Deputy Assistant Administrator for Fisheries Resource Management, National Marine Fisheries Service.

For the reasons set forth in the preamble, 50 CFR Part 650 is amended as follows:

PART 650—[AMENDED]

1. The authority citation for 50 CFR Part 650 continues to read as follows:

Authority: 16 U.S.C. 1801 *et seq.*

2. The table of contents is amended by adding a new section title that reads "650.23 Research exemption."

3. A new § 650.23 is added to read as follows:

§ 650.23 Research exemption.

(a) Upon the recommendation of the New England Fishery Management Council, the Regional Director may exempt any person or vessel from the requirements of this part for the conduct of research beneficial to the management of the sea scallop resource or fishery.

(b) The Regional Director may not grant such exemption unless it is determined that the purpose, design, and administration of the exemption is consistent with the objectives of the Atlantic Sea Scallop Fishery Management Plan, the provisions of the Magnuson Act and other applicable law, and that granting the exemption will not—

(1) Have a detrimental effect on the sea scallop resource and fishery; or

(2) Create significant enforcement problems.

(c) Each vessel participating in any exempted research activity is subject to all provisions of this part except those necessarily relating to the purpose and nature of the exemption. The exemption will be specified in a letter issued by the Regional Director to each vessel participating in the exempted activity. This letter must be carried aboard the vessel seeking the benefit of such exemption.

[FR Doc. 86-15465 Filed 7-3-86; 4:27 pm]

BILLING CODE 3510-22-M

---

50 CFR Part 661

[Docket No. 60477-6077]

Ocean Salmon Fisheries off the Coasts of Washington, Oregon, and California

AGENCY: National Marine Fisheries Service (NMFS), NOAA, Commerce.

ACTION: Notice of closure.

SUMMARY: The Secretary of Commerce (Secretary) announces the closure of the commercial salmon fishery in the fishery conservation zone (FCZ) from Cape Blanco, Oregon, to Point Delgada, California, at midnight, July 5, 1986, to ensure that the chinook salmon quota is not exceeded. The Director, Northwest Region, NMFS (Regional Director), has

determined in consultation with the Oregon Department of Fish and Wildlife (ODFW), the California Department of Fish and Game (CDFG), and the NMFS Southwest Region that the commercial fishery quota of 67,000 chinook salmon for the area will be reached by midnight, July 5, 1986. This action is intended to ensure conservation of chinook salmon.

DATES: Closure of the FCZ from Cape Blanco, Oregon, to Point Delgada, California, to commercial salmon fishing is effective at 2400 hours Pacific Daylight Time (PDT), July 3, 1986. Comments on this notice will be received until July 18, 1986.

ADDRESS: Comments may be mailed to Rolland A. Schmitten, Director, Northwest Region, NMFS, 7600 Sand Point Way N.E., BIN C15700, Seattle, WA 98115–0070, or Mr. E.C. Fullerton, Director, Southwest Region, MNFS, 300 Ferry Street, Terminal Island, CA 90731.

FOR FURTHER INFORMATION CONTACT: Rolland A. Schmitten at 206–526–6150; or E.C. Fullerton at 213–514–6196.

SUPPLEMENTARY INFORMATION: Regulations governing the ocean salmon fisheries at 50 CFR Part 661 specify at § 661.21(a)(1) that: "When a quota for the commercial or recreational fishery, or both, for any salmon species in any portion of the fishery management area is projected by the Regional Director to be reached on or by a certain date, the Secretary will, by publishing a notice in the **Federal Register** under § 661.23, close the commercial or recreational fishery, or both, for all salmon species in the portion of the fishery management area to which the quota applies as of the date the quota is projected to be reached".

Management measures for 1986 were published on May 5, 1986 (51 FR 15620). The 1986 commercial fishery for all salmon species in the FCZ from Cape Blanco to Point Delgada was established as June 30 (after two four-day fishing periods earlier in June) through the earliest of August 31 or attainment of a quota of either chinook salmon or coho salmon. The chinook quota, originally set at 68,200 fish, is subject to inseason adjustment based on any overage or underage in the chinook harvest for the earlier commercial fishery from Sisters Rocks, Oregon, to Chetco Point, Oregon. The most recent landings data for the commercial fishery from Sisters Rocks to Chetco Point indicate that the chinook quota was exceeded by 1,200 fish. Thus, the chinook quota from Cape Blanco to Point Delgada was adjusted to 67,000 fish (51 FR 24352, July 3, 1986). Based on the best available information, the commercial fishery catch in this area is projected to reach the revised quota of 67,000 chinook salmon by midnight, July 5, 1986. The Secretary therefore issues this notice closing the commercial fishery in the FCZ from Cape Blanco, Oregon, to Point Delgada, California, at 2400 hours PDT, July 5, 1986. This notice does not apply to commerical fisheries north of Cape Blanco or south of Point Delgada or to the recreational fishery operating in this area.

The Regional Director consulted with the Directors of ODFW and CDFG regarding this closure. The Directors of ODFW and CDFG confirmed that Oregon and California will close the commercial fishery in State waters adjacent to this area of the FCZ at 2400 hours, PDT, July 5, 1986.

Other Matters

This action is taken under the authority of § 661.23 and is in compliance with Executive Order 12291.

List of Subjects in 50 CFR Part 661

Fisheries.

Dated: July 3, 1986.

Carmen J. Blondin,

Deputy Assistant Administrator for Fisheries Resource Management, National Marine Fisheries Services.

[FR Doc. 86–15428 Filed 7–3–86; 2:42 pm]

BILLING CODE 3510-22-M

Proposed Rules

Federal Register
Vol. 51, No. 131
Wednesday, July 9, 1986

This section of the FEDERAL REGISTER contains notices to the public of the proposed issuance of rules and regulations. The purpose of these notices is to give interested persons an opportunity to participate in the rule making prior to the adoption of the final rules.

DEPARTMENT OF TRANSPORTATION

Federal Aviation Administration

14 CFR Part 39

[Docket No. 82-ASW-77]

Airworthiness Directives; Sikorsky Model S-76A Helicopters

AGENCY: Federal Aviation Administration (FAA), DOT.

ACTION: Notice of proposed rulemaking (NPRM).

SUMMARY: This notice proposes to amend an existing airworthiness directive (AD) which requires an initial and repetitive inspection, and replacement as necessary, of main landing gear positioning rod end fittings on all Sikorsky Model S-76A helicopters. This proposal would require installation of an improved main landing gear modification kit which would eliminate the necessity for these repetitive inspections on S-76A helicopters equipped with certain landing gear. The proposed amendment to the AD is needed to prevent a possible fatigue failure of other main landing gear components which could result in a landing gear failure on certain S-76A helicopters.

DATE: Comments must be received on or before August 18, 1986.

ADDRESSES: Comments on the proposal may be mailed in duplicate to: FAA, Southwest Region, Office of the Regional Counsel, P.O. Box 1689, Fort Worth, Texas 76101 or delivered in duplicate to FAA, Southwest Region, Office of the Regional Counsel, P.O. Box 1689, Fort Worth, Texas 76101.

Comments must be marked: Docket No. 82-ASW-77.

Comments may be inspected in Room 158, Building 3B, Office of the Regional Counsel, 4400 Blue Mound Road, Fort Worth, Texas, between the hours of 8 a.m. and 4:30 p.m. weekdays except Federal holidays.

The applicable Customer Service Notice (CSN) 76-134A dated January 10, 1984, may be obtained from Sikorsky Aircraft, Division of United Technologies Corporation, Attention: Commercial Product Support Department, North Main Street, Stratford, Connecticut 06601.

A copy of CSN 76-134A dated January 10, 1984, is contained in the Rules Docket, Office of the Regional Counsel, FAA, Southwest Region, 4400 Blue Mound Road, Fort Worth, Texas 76106.

FOR FURTHER INFORMATION CONTACT: Donald F. Thompson, Airframe Branch, ANE-152, Boston Aircraft Certification Office, New England Region, FAA, 12 New England Executive Park, Burlington, Massachusetts 01803, Telephone (617) 273-7113.

SUPPLEMENTARY INFORMATION: Interested persons are invited to participate in the making of the proposed rule by submitting such written data, views, or arguments as they may desire. Communications should identify the regulatory docket number and be submitted in duplicate to the address specified above. All communications received on or before the closing date for comments will be considered by the Director before taking action on the proposed rule. The proposal contained in this notice may be changed in the light of comments received

Comments are specifically invited on the overall regulatory, economic, and energy aspects of the proposed rule. All comments submitted will be available, both before and after the closing date for comments, in the Rules Docket, at the address given above, for examination by interested persons. A report summarizing each FAA-public contact, concerned with the substance of the proposed AD, will be filed in the Rules Docket.

Commenters wishing the FAA to acknowledge receipt of their comments submitted in response to this notice must submit a self-addressed, stamped postcard on which the following statement is made: "Comments to Docket Number 82-ASW-77." The postcard will be date/time stamped and returned to the commenter.

This proposal would further amend Amendment 39-4508 (47 FR 54290), AD 82-25-1, which currently requires an initial and repetitive inspection and replacement as necessary of certain main landing gear positioning rod end bearings on Sikorsky S-76A helicopters certificated in any category. After issuing Amendment 39-4508, the FAA determined that the original design S-76A main landing gear rod ends are still subject to cracking and should be replaced with improved rod ends rather than inspected at 100-hour intervals. Additionally, other landing gear components which were not previously evaluated for fatigue characteristics should be replaced with improved components to prevent possible failure of the original design parts. Failure of these original design landing gear parts could lead to a safety of flight or landing problem. Only the improved rod ends should be used in conjunction with the other improved landing gear components noted in CSN 76-134A.

The FAA has determined that the original main landing gear positioning rods, rod ends, and interconnect bellcranks identified in CSN 76-134A which applies to certain helicopters should be removed from service and replaced with new main landing gear components with the attaching hardware described in the service notice. The replacement components as well as other landing gear components were evaluated for fatigue strength and are identified as having a service life limit that is prescribed in Amendment 39-5298 (51 FR 17009), AD 86-09-11.

Since these conditions are likely to exist or develop on other S-76A helicopters, the proposed AD would, for those S-76A helicopters with serial numbers prior to 760308, require removal of the original main landing gear positioning rods, rod ends, and interconnect bellcranks from further service on Sikorsky Model S-76A helicopters as prescribed.

The FAA has determined that this proposed regulation involves approximately 20 helicopters. The cost of the modification is estimated to be $175 for each helicopter. Therefore, I certify that this action: (1) Is not a "major rule" under Executive Order 12291; (2) is not a significant rule under DOT Regulatory Policies and Procedures (44 FR 11034; February 26, 1979); and (3) if promulgated, will not have a significant economic impact on a substantial number of small entities under the criteria of the Regulatory Flexibility Act. A copy of the draft evaluation prepared for this action is contained in the regulatory docket. A copy of it may be obtained by contacting

the person identified under the caption **"FOR FURTHER INFORMATION CONTACT."**

List of Subjects in 14 CFR Part 39

Air transportation, Aircraft, Aviation safety, Safety.

The Proposed Amendment

Accordingly, pursuant to the authority delegated to me, the Federal Aviation Administration proposes to amend § 39.13 of Part 39 of the FAR as follows:

PART 39—[AMENDED]

1. The authority citation for Part 39 continues to read as follows:

Authority: 49 U.S.C. 1354(a), 1421, and 1423; 49 U.S.C. 106(g) (Revised Pub. L. 97–449, January 12, 1983); and 14 CFR 11.85.

2. By amending Amendment 39–4508 (47 FR 54290), AD 82–25–1, as follows:

(a) Revise the applicability statement by adding the phrase ". . . having serial numbers prior to 760308."

(b) Add the following paragraph and notes after the fourth paragraph that ends ". . .or as specified in an FAA approved equivalent instruction."

Within the next 300 hours' time in service but no later than 6 months after the effective date of this Amendment, unless already accomplished, replace rod end fitting, part number KR10MEAK and mating parts with rod end fitting part number 1945E235 and all improved parts contained in Sikorsky's Main Landing Gear Structural Improvement Kit Part Number 76070–25004–011 in accordance with Sikorsky CSN 76–134A dated January 10, 1984, paragraphs A through D. Revise the aircraft weight and balance.

Notes.—Installation of the 76070–25004–011 Main Landing Gear Structural Improvement Kit terminates the inspection requirements of this AD.

Service lives and mandatory inspection requirements for specific parts contained in the landing gear structural improvement kit are contained in the Airworthiness Limitations Section, Chapter 4 of the Revised Sikorsky S–76A Maintenance Manual No. SA 4047–76–2–1 (replacement serialized parts) and are also stated in Amendment 39–5298, AD 86–09–11 (replacement non-serialized parts).

(c) Revise last paragraph telephone number to (617) 273–7118.

The FAA will request the permission of the **Federal Register** to incorporate by reference the manufacturer's service notice identified and described in this document.

Issued in Fort Worth, Texas, on June 26, 1986.

C.R. Melugin, Jr.,

Director, Southwest Region.

[FR Doc. 86–15359 Filed 7–8–86; 8:45 am]

BILLING CODE 4910–13–M

---

14 CFR Parts 43, 91, 121, 127, 135

[Docket No. 24953; Petition Notice PR 86–11]

Petition of Air Transport Association of America; Automatic Altitude Reporting

AGENCY: Federal Aviation Administration (FAA) DOT.

ACTION: Petition for rulemaking.

SUMMARY: This notice publishes for public comment the petition of the Air Transport Association of America dated March 25, 1986. The petitioner proposes to amend § 91.24, 91.36, 91.171, 121.345, 127.123, 135.143, and Appendix E of Part 43 of the Federal Aviation Regulations (FAR). The ATA states that the objectives of the proposal is to improve the safety and effectiveness of the Air Traffic Control System by requiring additional implementation of automatic altitude reporting and improved automatic altitude reporting equipment.

The purpose of this notice is to improve the public's awareness of this aspect of FAA's regulatory activities. Publication of this notice is not intended to affect the legal status of the petition or its final disposition.

DATE: Comments must be received on or before September 9, 1986.

ADDRESS: Send comments on this petition in triplicate to: Federal Aviation Administration, Office of the Chief Counsel, Attn: Rules Docket (AGC–204), Docket No. 24953, 800 Independence Avenue, SW., Washington, DC 20591, or deliver in triplicate to Room 916, 800 Independence Avenue, SW., Washington, DC. Comments delivered must be marked: Docket No. 24953. Comments may be inspected in Room 916 weekdays, except Federal holidays, between 8:30 a.m. and 5 p.m.

FOR FURTHER INFORMATION CONTACT: Thomas Stuckey, Manager, Project Development Branch (AFS–850), General Aviation and Commercial Division, Office of Flight Standards, or Gene Falsetti, Airspace and Air Traffic Rules Branch (ATO–230) Airspace-Rules and Aeronautical Information Division, Air Traffic Operations Service, Federal Aviation Administration, 800 Independence Avenue, SW., Washington, DC 20591, telephone numbers (202) 426–8150 and (202) 426–8783, respectively.

SUPPLEMENTARY INFORMATION:

Comments Invited

Interested persons are invited to submit such written data, views, or arguments on the petition as they may desire. Communications should identify the docket and petition notice number and be submitted in triplicate to the address indicated above. All communications received on or before the closing date will be considered before taking action on the petition. All comments submitted will be available for examination in the FAA docket. Persons wishing the FAA to acknowledge receipt of the comments received in response to this notice should submit a self-addressed, stamped postcard which states "Comment to Docket No. 24953." The postcard will be date/time stamped and returned to the commenter.

Although this notice sets forth the contents of the petition as received by the FAA without changes, it should be understood that its publication to receive public comment is in accordance with FAA procedures governing petitions for rulemaking. It does not propose a regulatory rule for adoption, represent an FAA position, or otherwise commit the agency on the merits of the petition. The FAA intends to proceed to consider the petition under the applicable procedures of Part 11 and reach a conclusion on the merits of the proposal after it has had an opportunity to evaluate the petition carefully in light of the comments received and other relevant matters presented. If the FAA concludes that it should initiate public rulemaking action on the petition, appropriate rulemaking action, including an evaluation of the proposal, will be published.

The Petition

Accordingly, the Federal Aviation Administration publishes verbatim for public comment the following petition for rulemaking of Air Transport Association of America dated March 25, 1986.

Issued in Washington, DC, on July 2, 1986.

John H. Cassady,

Assistant Chief Counsel Regulations and Enforcement Division.

BILLING CODE 4910–13–M

Air Transport Association ata OF AMERICA

1709 New York Avenue, NW
Washington, DC 20006
Phone (202) 626-4021

J ROGER FLEMING
Senior Vice President
Technical Services

March 25, 1986

Federal Aviation Administration
Office of Chief Counsel
Attn: Rules Docket, AGC-204
800 Independence Avenue, S. W.
Washington, D. C. 20591

Gentlemen:

This is a petition, on behalf of the ATA member airlines, for FAA to undertake rulemaking action beginning with an Advanced Notice of Proposed Rulemaking (ANPRM) with the objective of improving the safety and effectiveness of the Air Traffic Control System by requiring additional implementation of automatic altitude reporting and improved automatic altitude reporting equipment. This petition is submitted pursuant to the provisions of Section 4 of the Administrative Procedure Act (5 U.S.C. Section 553) and Subsection 11.25 of the Federal Aviation Regulations (14C.F.R. Section 11.25).

Background

The Air Traffic Control (ATC) System is the primary means of separation assurance in the U. S. National Airspace System. ATC personnel provide this separation with the aid of automated ATC equipment. To provide separation service ATC must have knowledge of aircraft position, horizontally and vertically. Normally the information on aircraft position is provided automatically through the Air Traffic Control Radar Beacon System (ATCRBS) and is continuously displayed to the controller. For this system to function fully aircraft have to be equipped with transponder and automatic altitude reporting equipment. When aircraft operate without altitude reporting equipment an important portion of the needed information is not displayed automatically. Lack of this information slows down the process and creates additional workload for the ATC personnel when they must obtain altitude information for separation purposes by other means, such as voice communications over VHF/UHF radio. Further, without automatic reporting, the controller may not be aware of a significant change, and may have no indication of a developing problem. While such loss of timely information may be unavoidable in the case of occasional airborne equipment failure, many

operators are not even required to carry the cooperative airborne equipment. Further, a significant number of operators have not installed the equipment voluntarily. According to FAA figures (as of the end of 1984) 68% of civil aircraft do not have automatic altitude reporting. Even if another 20% of the aircraft have added the equipment to date, we believe it is far from the level essential for safety and effectiveness in the ATC system.

Air transportation has a remarkably good safety record. This has in the view of many resulted from years of conscientious effort to improve safety by industry and Government. We believe that additional improvement in system safety and effectiveness is available through establishing requirements for carriage and use of automatic altitude reporting equipment. There are a number of regulatory dockets which currently address the airspace in which automatic altitude reporting should be required. Of particular note is Notice No. 85-16 in Docket No. 23799 and the petition in Docket No. 24496. In principle, we support the objectives of that Notice and the Petition; however, we believe their scope is unduly limited and therefore think that this separate petition is essential to achieve an improved level of safety and assure that our comments on Notice 85-16 will be within its scope. Further, resolution of the issues in this ATA petition should properly take longer than those in Notice 85-16, and we do not want to delay action on the Notice.

Improvements have been developed for the system of automatic altitude reporting, which was designed over two decades ago. To some extent these were discussed in Notice 85-16. We believe these improvements will also be needed in the foreseeable future. If we were not to include them in this petition, then a user who implements new equipment without the improvements could be rightfully concerned if a few years later another requirement were established which would obsolete recently purchased equipment. Accordingly, this petition addresses these improvements, with a time schedule which provides for gradual implementation and is, hopefully, consistent with good financial management. We encourage discussion of all these points.

Substance of the Petition

This petition requests FAA to undertake rulemaking with an ANPRM addressing the need to improve safety and effectiveness in the ATC system through further implementation of automatic altitude reporting. In order to accomplish this goal, five separate but related regulatory changes are proposed.

Proposal 1. The FAA should revise FAR 91.24 to establish an additional requirement for carriage of an operating transponder with automatic altitude reporting for flight operations in all terminal airspace where FAA provides radar service and in all controlled airspace above

4,000 feet AGL effective July 1, 1989. (Notice 85-16 proposes that this equipment be required for all flights in Group II Terminal Control Areas in addition to presently required airspace).

Discussion: Automatic altitude reporting provides the ATC system with the present altitude of an aircraft and timely information on changes in altitude. The continuous display of this information to the ATC controller facilitates performance of the ATC safety mission and reduces voice frequency congestion. It also permits the ATC computer to automatically provide a Conflict Alert to the controller in event of a potential conflict between participating aircraft (those being tracked by the ATC computer). Additionally, automatic altitude reporting will provide the data necessary to permit functioning of a planned new safety program which will alert the controller to conflicts between all equipped aircraft. This program, called Conflict Alert for VFR Mode C Intruders, is now scheduled to follow implementation of the new ATC Host computers. Automatic altitude reporting will also permit another new safety program, Automatic Conflict Resolution, to function with these same aircraft. Both of these new ATC programs have been highlighted in recent Congressional testimony by Administrator Engen. With automatic altitude reporting by all aircraft operating within the designated airspace these important safety services will be available to identify nearly all potential conflicts involving airline and other aircraft.

A proposal that all aircraft should carry and operate the improved automatic altitude reporting would be ideal, but would inadequately consider the few aircraft operators, such as aerial applicators (crop dusters), who practically never enter heavily used airspace. The airlines also considered proposing that all aircraft above a certain altitude should be equipped, similar to the present rule, but specifying a lower altitude. In any case, the airlines believe there is a need for automatic altitude reporting in the terminal area and Proposal 1 combines the several possible approaches to both lower the altitude of enroute airspace where automatic altitude reporting is required and to require it within terminal airspace with radar service. This is the first phase of the recommended safety improvements.

Other alternatives not included in Proposal 1, but which could be considered, are requirements for automatic altitude reporting transponder carriage for all aircraft over a certain weight, or based on number of engines or passengers. Another approach would require the new capability after a certain number of flight hours, long enough to give relief to the infrequent user, but short enough to require the frequent users of the airspace system to implement relatively soon. Should these alternatives be given further consideration by FAA they would need to be structured to meet the objective.

It is recognized that data available on accidents and near mid-air collisions contain a number of anomalies. For example, the worst mid-air collision in recent years occurred at San Diego between two aircraft which were both equipped with transponders with automatic altitude reporting. From this it is evident that automatic altitude reporting is no guarantee that a mid-air collision will not occur. However, without automatic altitude reporting the controllers will not in some cases have the timely information essential to the performance of their primary job of separation assurance. Nor will Conflict Alert for VFR Mode C Intruders or Automatic Conflict Resolution be possible.

As stated, Proposal 1 clearly supports the safety objective and includes the first phase of the airline recommended means to achieve this objective. Airspace applicability includes the regions of greatest exposure.

Proposal 2. The FAA should accelerate applicability of the requirements discussed in the preamble of Notice 85-16 by revising FAR 91.24, 91.36 121.345, 127.123, and 135.143 effective July 1, 1992 to require <u>all new</u> altitude reporting equipment installations:

a) to meet improved performance standards. We propose that the improvements be based on the accuracy criteria contained in SAE standard AS 8009, requiring automatic correction of static system errors which exceed ± 100 feet, and

b) to reply to Mode S interrogations with altitude information in 25 feet increments compatible with RTCA Document DO-181, with appropriate correspondence (e.g. 35 feet).

Discussion: This proposal addresses another parameter, the choice of equipment performance and function. The effective date of this proposal of seven years would be well into the Mode S ground implementation time frame, and improved conflict alert is to be available in ATC computers. Implementation of Mode S with automatic altitude reporting in 25 feet increments based upon an improved accuracy sensor will permit these safety enhancements to perform better. Further, most errors generated by the airborne equipment are invisible to the ATC system. The FAA's vertical separation program and the TCAS development have shown the errors in altitude sensors to be important elements in achieving actual separation. Thus, improved accuracy of reported altitude information should result in a significant improvement in safety.

The proposed improved performance is based upon Society of Automatic Engineers, Inc. (SAE) Aerospace Standard AS 8009. It may also be useful to consider their Aerospace Standards AS 415, AS 942, and AS 8002 as means to specify the necessary improvement. Another standard, AS 8003, currently applies to automatic pressure altitude reporting code generating equipment and could serve as the basis for developing the new correspondence requirement.

Proposal 2 is the second of 3 phases of proposed implementation requirements and initiates the requirements for improved performance. The phased approach allows an orderly implementation, while avoiding the dilemmas presented if no mention is made of improved performance requirements until a few years hence (see above discussion under Background). Without such an approach, operators would not have sufficient information to make reasonable business decisions on the capabilities of new equipment to be purchased, for example, in 1989. The choice of the effective date is a subject worthy of further review. In this proposal it was chosen to

correspond with the final effective date in FAA Notice 85-16.

Proposal 3. Consistent with the proposed acceleration of the improvements discussed in Notice 85-16, the FAA should revise FAR 91.24, 91.36, 121.345, 127.123, and 135.143 effective July 1, 1997 to require all operating transponders to comply with the standards identified in Proposal 2 (above).

Discussion: This proposal is the third phase of the three phased approach discussed under Proposal 2 above. The choice of the effective date is worthy of further review. In this proposal it was chosen to be consistent with FAA's schedule for the later phases of FAA's Automated Enroute Air Traffic Control (AERA) program. It is 5 years after the effective date in Proposal 2.

Proposal 4. While Notice 85-16 proposes revision of FAR 43 Appendix F to incorporate Mode S criteria into maintenance programs, we propose the FAA should revise FAR 43 Appendix E to incorporate the new standards for improved altitude reporting accuracy and reduced increments identified in Proposal 2 (above) for inspections and maintenance.

Discussion: This is a corrolary implementing proposal.

Proposal 5. The FAA should revise FAR 91.171 to require biennial checks of automatic altitude reporting installations in all aircraft so equipped, not just for IFR flight as presently required.

Discussion: With substantial portions of the ATC system integrity relying upon proper functioning of automatic altitude reporting, whether from IFR or VFR traffic, it is essential that the altitude information reported be correct. IFR aircraft have regular operational checks of their encoding during regular use, and even so are required to have a biennial check under Appendix E of FAR 43. Some VFR aircraft will not have these operational checks. Even with operational checks, only a limited portion of the equipment characteristics are checked and defects can go undetected for significant periods. Thus, the proposal is to expand the applicability of FAR 91.171 to require VFR aircraft to comply.

A few comments appear to be in order regarding the specific request for an Advanced Notice of Proposed Rulemaking (ANPRM) rather than simply a Notice of Proposed Rulemaking (NPRM). The objective of an ANPRM is to establish a dialogue on a broader range of issues than those raised by a specific set of proposed regulatory requirements, and to offer the system users and Government the opportunity to develop specific regulatory concepts which achieve the goals of most parties and most benefit the travelling public. We believe that this process, possibly including a public hearing or hearings, would serve to overcome the difficulties encountered by previous proposals which, to date, have resulted in minimal changes to equipage requirements.

Explanation of Interests

The members of the Air Transport Association of America are certificated air carriers (see Attachment A) who together operate approximately 15,000 flights per day in the United States. These members are committed to the goal of safety in aviation, and further believe that safety is good business. While air transportation has established an incredibly good overall safety record, we believe that constant vigilence is essential to maintain, and where practical to increase, safety.

Airline flights are obliged to operate daily in airspace with other traffic, which is under both instrument and visual flight rules. The objective of this petition is to reduce the risk -- to airline passengers and others -- of a mid-air collision with another aircraft which is not equipped to fully cooperate with the ATC system.

We recognize that there are many judgments needed in achieving this increase in safety, and accordingly have recommended that FAA issue an ANPRM rather than a NPRM, and that the need for public hearings be considered. We genuinely hope that this process can lead to a consensus regarding the details of achieving a safety improvement through improved automatic altitude reporting.

With respect to the economic burden of rulemaking resulting from this petition, we acknowledge that the costs fall largely to those other operators who have not chosen to equip their aircraft, and yet do operate in airspace in common with the air carriers. It will be noted, however, that Proposals 2 and 3 would not only require improvements in the equipment carried by other operators, but also changes in the equipment carried by our member airlines. We believe that inclusion of these changes in this proposal is clear evidence of the airlines' commitment to the goal of improving safety.

Conclusion

In conclusion, this petition is intended to initiate an orderly process of FAA rulemaking leading to enhanced ATC safety, by requiring additional airborne automatic altitude reporting transponders. A phased schedule leading to eventual implementation of improved accuracy and refined increment reporting is also recommended. Corollary requirements for maintenance are also included. We believe these steps should significantly improve safety in the ATC system.

Sincerely,

J. Roger Fleming

J. Roger Fleming
Senior Vice President
Technical Services

Attachment

SUMMARY

Petition for an advance notice of proposed rulemaking and possible public hearing seeking improvements to automatic altitude reporting equipment and an expanded application of their use.

[FR Doc. 86-15361 Filed 7-8-86; 8:45 am]
BILLING CODE 4910-13-C

Attachment A

List of Member Airlines

AirCal, Inc.
Air Canada*
Alaska Airlines, Inc.
Aloha Airlines, Inc.
American Airlines, Inc.
Braniff, Inc.
Continental Airlines Corp.
CP Air*
Delta Air Lines, Inc.
Eastern Air Lines, Inc.
Evergreen International Airlines, Inc.
Federal Express Corporation
The Flying Tiger Line, Inc.
Frontier Airlines, Inc.
Hawaiian Airlines, Inc.
Jet America Airlines, Inc.
Midway Airlines, Inc.
Northwest Airlines, Inc.
Ozark Air Lines, Inc.
Pan American World Airways, Inc.
Piedmont Airlines
PSA-Pacific Southwest Airlines
Purolator Courier Corporation
Republic Airlines, Inc.
TranStar Airlines Corporation
Trans World Airlines, Inc.
United Airlines, Inc.
United Parcel Service
USAir, Inc.
Western Airlines, Inc.
World Airways, Inc.

* Associate Member

14 CFR Part 91

[Docket No. 18962; Petition Notice PR 86-10]

Petition of Charles Webber—Deletion of Requirement for Medical Certificate; Correction

AGENCY: Federal Aviation Administration (FAA), DOT.

ACTION: Petition for rulemaking; correction.

SUMMARY: The supplemental petition of Charles Webber dated March 30, 1986, was inadvertently omitted from the document published in the **Federal Register** on June 25, 1986 (51 FR 23081). The document should be corrected by adding the supplemental verbatim petition immediately following page 23084.

DATE: Comments must be received on or before August 22, 1986.

FOR FURTHER INFORMATION CONTACT: Dr. William H. Hark, Manager, Aeromedical Standards Division (AAM-200), Office of Aviation Medicine, Federal Aviation Administration, 800 Independence Avenue, SW., Washington, DC 20591, telephone (202) 426-3802.

Issued in Washington, DC, on July 2, 1986.

John H. Cassady,

Assistant Chief Counsel, Regulations and Enforcement Division.

CHARLES WEBBER

4130 MENNES STREET • RIVERSIDE, CALIFORNIA 92509 • (714) 684-7595

March 30, 1986

U.S. Department of Transportation
Federal Aviation Administration
800 Independence Ave., S.W.
Washington, D.C. 20591

Attention: Mr. Fred Laird, Acting Manager, Safety Regulations Division, Office of Program and Regulations Management

Dear Mr. Laird,

This is in reference to my May 23, 1979 petition (Docket No. 18962) to delete FAR, Section 61.3(c).

I wish to correct an error in my petition, namely, that I desire to delete FAR, Section 61.103(c), not Section 61.3(c). I challenge only the validity of mandatory Class 3 medical certification, not that of Class 1 and Class 2 medical certification. Furthermore, I consider the availability of optional Class 3 medical certification to be desireable.

In the course of responding to my petition, you should be aware of NTSB Docket No. SE-7252.

Most sincerely,

Charles Webber

CHARLES WEBBER, Petitioner

[FR Doc. 86-15360 Filed 7-8-86; 8:45 am]
BILLING CODE 4910-13-M

COMMODITY FUTURES TRADING COMMISSION

17 CFR Part 30

Foreign Options and Foreign Futures Transactions

AGENCY: Commodity Futures Trading Commission.

ACTION: Extension of comment period.

SUMMARY: On April 8, 1986, the Commission published in the **Federal Register** a notice of proposed rulemaking on the regulation of foreign options and foreign futures transactions in the United States. 51 FR 12104. The **Federal Register** release seeks public comment on the Commission's proposed regulations governing the offer and sale of options and futures contracts traded on or subject to the rules of a foreign board of trade. The comment period on the notice of proposed rulemaking is to expire on July 7, 1986.

By letter dated June 18, 1986, the Futures Industry Association, on behalf of its members, requested that the comment period be extended for a sixty-day period so that it may fully address the issues raised in the notice of proposed rulemaking. Further, in conversations with staff of the Commission, representatives of the various London exchanges have requested an extension of the comment period on the Commission's proposed rules to September 30, 1986. These representatives noted that the issues raised by the proposed rules as they would relate to persons located outside of the United States are particularly complex. Moreover, by that date, the provisions of the Financial Services Bill, which will establish a new system for the regulation of the financial services industry in the United Kingdom and which is presently pending in the British Parliament, will be more certain. In order to ensure that all interested parties have an opportunity to submit meaningful comments, the Commission has determined to grant the request for an extension of the comment period.

DATES: Accordingly, notice is hereby given that all comments on the Commission's notice of proposed rulemaking on the regulation of foreign options and foreign futures transactions in the United States (51 FR 12104, April 8, 1986) must be submitted by September 30, 1986.

FOR FURTHER INFORMATION CONTACT: Jane C. Kang, Attorney, Division of Trading and Markets, Commodity Futures Trading Commission, 2033 K Street, NW., Washington, DC 20581. Telephone: (202) 254-8955.

Issued in Washington, DC, on July 3, 1986, by the Commission.

Jean A. Webb,

Secretary to the Commission.

[FR Doc. 86-15432 Filed 7-8-86; 8:45 am]

BILLING CODE 6351-01-M

DEPARTMENT OF HOUSING AND URBAN DEVELOPMENT

Office of the Assistant Secretary for Fair Housing and Equal Opportunity

24 CFR Part 115

[Docket No. N-86-1618; FR-2249]

Recognition of Substantially Equivalent Laws

AGENCY: Office of the Assistant Secretary for Fair Housing and Equal Opportunity, HUD.

ACTION: Notice of determination; request for comments.

SUMMARY: Title 24, Part 115 of the Code of Federal Regulations describes the procedure for recognition of State and local fair housing laws that provide rights and remedies, for alleged discriminatory housing practices, that are substantially equivalent to those provided by the Federal Fair Housing Act (Title VIII of the Civil Rights Act of 1968) ("the Act"). This notice advises that a determination has been made that the fair housing law of each named state or locality, on its face, is substantially equivalent to the Act. The notice seeks public comment on this determination and on present or past performance of the agency administering and enforcing the State or local law. The Department will consider all comments submitted in making its determination as to whether the State or local law provides rights and remedies which are substantially equivalent to the Act.

DATES: Comments due: August 8, 1986.

ADDRESS: Interested persons are invited to submit comments to the Office of General Counsel, Rules Docket Clerk, Room 10276, Department of Housing and Urban Development, 451 Seventh Street, SW., Washington, DC 20410. Communications should refer to the above docket number and title. A copy of each communication submitted will be available for public inspection and copying during regular business hours at the above address.

FOR FURTHER INFORMATION CONTACT: Thomas J. Jankowski, Director, Office of Fair Housing Enforcement and Section 3 Compliance, Room 5208, Department of Housing and Urban Development, 451 Seventh Street, SW., Washington, DC 20410; telephone (202) 426-3500. (This is not a toll-free number).

SUPPLEMENTARY INFORMATION: On August 9, 1984 (49 FR 32042), the Department published a final rule that revised 24 CFR Part 115 to enable the Department to add or withdraw recognition of substantially equivalent laws through publication of a notice in the **Federal Register**. The purpose of this notice is to advise the public, in accordance with 24 CFR 115.6(b), that the laws of the following jurisdictions have, on their face, been determined to be substantially equivalent. The jurisdictions are: (1) State of Oklahoma; (2) Meriden, Connecticut; (3) Country Club Hills, Illinois; (4) Elgin, Illinois; (5) Glenwood, Illinois; (6) Muncie, Indiana; (7) Ashtabula, Ohio; (8) Mansfield, Ohio; (9) Farrell, Pennsylvania; and (10) Madison, Wisconsin.

The evaluation of the laws of these jurisdictions has been conducted in accordance with 24 CFR 115.3. Under § 115.3(c), analysis of the adequacy of a State or local fair housing law "on its face" is intended to focus on the meaning and intent of the text of the law as distinguished from the effectiveness of its administration. Accordingly, the analysis is not limited to the literal text of the law, but must take into account necessary relevant matters of State or local law, or interpretations of the fair housing law by competent authorities.

Section 115.2 provides for two separate inquiries: (a) Whether the State or local law, on its face, provides rights and remedies for alleged discriminatory housing practices which are substantially equivalent to the rights and remedies provided in the Act, and (b) whether the current practices and past performance of the appropriate State or local agency charged with administration and enforcement of such law demonstrates that in operation, the State or local law in fact provides rights and remedies which are substantially equivalent to those provided in the Act.

Today's notice invites interested persons and organizations, during the next 30 days, to file written comments relevant to the determination whether the current practices and past performance of the State or local agency charged with administration and enforcement of the fair housing law of each of these jurisdictions demonstrate that, in operation, the law in fact provides rights and remedies substantially equivalent to those provided in the Act. This notice also

invites comments on the Department's determination as to the adequacy of the law on its face.

In accordance with 24 CFR 50.20(k), this notice is not subject to the environmental assessment requirements of the National Environmental Policy Act of 1969, 42 U.S.C. 4332.

Under 5 U.S.C. 605(b) (the Regulatory Flexibility Act), the Undersigned hereby certifies that this notice would not have a significant economic impact on a substantial number of small entities. The rule only carries out the Department's statutory responsibility as set out in section 810(c) of the Fair Housing Act, 42 U.S.C. 3610(c).

Accordingly, public comment is solicited in accordance with 24 CFR 115.6(b) with respect to the following jurisdictions:

State

Oklahoma

Localities

Meriden, Connecticut
Country Club Hills, Illinois
Elgin, Illinois
Glenwood, Illinois
Muncie, Indiana
Ashtabula, Ohio
Mansfield, Ohio
Farrell, Pennsylvania
Madison, Wisconsin

Dated: June 30, 1986.

William E. Wynn,

Acting General Deputy Assistant Secretary for Fair Housing and Equal Opportunity.

[FR Doc. 86-15343 Filed 7-8-86; 8:45 am]

BILLING CODE 4210-28-M

ENVIRONMENTAL PROTECTION AGENCY

40 CFR Part 52

[AL-015; A-4-FRL-3046-5]

Approval and Promulgation of Implementation Plans; Alabama: Volatile Organic Compound Emissions

AGENCY: Environmental Protection Agency.

ACTION: Proposed rule.

SUMMARY: EPA today proposes to approve the revisions to Chapter 6—Control of Volatile Organic Compounds (VOC) of the Alabama Pollution Control Rules and Regulations as submitted by the Alabama Department of Environmental Management. The intent of these revisions is to apply the provisions of the entire chapter to those counties that are not attaining the ozone standard; to keep in effect those regulations for which sources have complied, regardless of location or attainment status; and to exempt those attainment and unclassified counties from further regulation. This action specifies discrete areas for which these regulations will still apply and formally revokes any remaining accommodative aspect of Alabama's Ozone State Implementation Plan (SIP).

The public is invited to submit written comments on this proposed action.

DATE: To be considered, comments must reach us on or before August 8, 1986.

ADDRESSES: Written comments should be addressed to Jill Thomas of EPA Region IV's Air Programs Branch (see EPA Region IV address below). Copies of the materials submitted by Alabama may be examined during normal business hours at the following locations:

Environmental Protection Agency, Region IV, Air Programs Branch, 345 Courtland Street NE., Atlanta, Georgia 30365

Air Division, Alabama Department of Environmental Management, 1751 Federal Drive, Montgomery, Alabama 36130.

FOR FURTHER INFORMATION CONTACT: Jill Thomas, Air Programs Branch, EPA Region IV, at the above address and telephone number 404/347-4253 or FTS 257-4253.

SUPPLEMENTARY INFORMATION: On November 26, 1979 (44 FR 67375) EPA announced conditional approval of the Alabama Ozone SIP. On June 3, 1980 (45 FR 37430) EPA approved corrections to deficiencies cited in the notice above and gave approval to the Alabama SIP. The Alabama SIP was considered to be an "accommodative" ozone SIP. An accommodative SIP is one which provides for new source growth without emission offsets by requiring RACT on existing 100 ton per year (TPY) Group I and II VOC sources in areas not normally required to have controls (i.e., attainment and unclassified areas). In other words, controls were to be applied on a statewide basis. At this time, EPA had not issued guidance on Group II VOC categories. Therefore, a commitment to implement Group II VOC regulations upon receipt of the guidance from EPA was required in the 1979 SIPs. The accommodative aspect of the Alabama Ozone SIP was modified on October 29, 1981 (46 FR 53408) when EPA approved a request by the State to eliminate the requirement that VOC controls be installed by existing sources located in attainment areas which did not include an urban area with a population greater than 200,000. On February 12, 1982, Alabama submitted their Group II VOC regulations. EPA approved Alabama's Group II VOC regulations on April 19, 1984 (49 FR 15549).

On September 23, 1985, the Alabama Department of Environmental Management (ADEM) submitted revisions to the Air Pollution Control Commission Rules and Regulations. Specifically, these revisions were made to revoke the applicability of two Group I VOC regulations and all Group II VOC regulations from counties on a statewide basis. These revisions do not apply to any county currently or previously designated nonattainment for ozone. Because ambient ozone data collected by ADEM have demonstrated that Etowah, Jefferson, Mobile, and Russell Counties [1] have not been attaining the ozone standard, and because the Group II regulations have previously been implemented, the Group I and II VOC regulations will remain applicable for these counties.

This action effectively revokes the accommodative aspect of the Alabama Ozone SIP. Since many areas designated as attainment or unclassified do not have monitored data, revocation of the accommodative SIP means that future sources locating in these areas will be required to either perform preconstruction monitoring or to comply with Appendix S, Part 51, including the application of LAER, statewide compliance, and offsets.

On August 7, 1985, the revisions to Chapter 6 were subject to public hearing and on September 18, 1985, the Alabama Environmental Management Commission adopted the revisions. The pertinent regulations are organized in the following manner: Applicability (6.1); Group I (6.4-6.8, 6.11.1-6, 6.11.8, 6.12-6.13); and Group II (6.11.10-6.11.11, 6.17-6.23). The revisions proposed to Chapter 6 are listed below.

6.1.1(a) The entire paragraph "sources located in an ozone attainment area which does not include an urban (greater than 200,000 population) areas (Adopted March 24, 1981)" is deleted and reserved for future use.

6.1.2 Recodified from 6.1.1(d).

6.1.3 Recodified from 6.1.2.

6.1.4 A new section 6.1.4 is added as follows:

6.1.4 The provisions of section 6.11.6 shall not apply to any sources except those located in Jefferson County and those sources in the State which manufacture audio or video recording tape.

[1] On April 14, 1986, EPA granted a request to redesignate Russell County to attainment; EPA is currently preparing a proposal to redesignate Etowah & Mobiile Counties to attainment for ozone based on three years of ambient air data.

6.1.5 A new section 6.1.5 is added as follows:

6.1.5 The provisions of Parts 6.17, 6.18, 6.19, 6.20, 6.21, 6.22, 6.23, and sections 6.11.2, 6.11.10, and 6.11.11 shall not apply to any source except those located in Etowah, Jefferson, Mobile, and Russell Counties.

For clarity, the following comments are made. Rule 6.1.4 states that the provisions of section 6.11.6 (Group I—Paper Coating) shall apply to sources located in Jefferson County, but no mention is made of the other ozone nonattainment areas. ADEM has certified in an August 16, 1985, letter that there were no potential 100 TPY sources subject to Section 6.11.6 located in Etowah, Mobile, or Russell Counties and that no new major sources of VOC emissions have been constructed in Alabama using the accommodative SIP. Furthermore, on March 7, 1986, ADEM certified that no such sources exist in Etowah, Mobile, or Russell Counties.

Although no revisions are made regarding Rule 6.1.1(b), the following comments must be made at this time. Rule 6.1.1(b) exempts sources with a potential VOC emission rate of less than 100 TPY. Alabama's definition of "source" is "any building, structure, facility, installation, article, machine, equipment, device, or other contrivance which emits or may emit any air contaminant". The State's interpretation of this is made on a "per line" basis, whereas EPA recognizes the definition of "source" with respect to the rule applicability to be on a "per plant" basis. EPA originally approved this definition by interpreting "facility" to equate to "plant". On September 3, 1985, ADEM certified that adoption of EPA's definition of "source" would result in a 0.8% decrease in VOC emissions (196 TPY) for Mobile County and no additional reductions of VOCs in either Etowah or Russell Counties. EPA's position is that while we believe that the definition should be changed, a change to Alabama's definition of "source" at this time would not significantly alter the projected emission reductions. The Jefferson County Ozone SIP revision, submitted by ADEM on November 18, 1985, and currently under EPA review, proposes that the county no longer exempt sources with a potential VOC emission rate of less than 100 TPY from regulatory control. Therefore, all VOC sources in Jefferson County, regardless of which definition is employed, will be subject to the regulations. Jefferson County adopted this proposal on December 13, 1985. Furthermore, ADEM certified (letter dated September 3, 1985) that if a new ozone nonattainment area is identified, they will adopt regulations incorporating EPA's definition of "source" as part of the SIP revision for that area. However, it must be noted that reductions in VOC emissions subsequently achieved by Alabama may not, as a result of Alabama's current definition of "source", equate to a RACT level of emissions for Mobile County.

Proposed Action.

These regulations meet EPA requirements. Therefore, EPA is today proposing to approve the revisions to the Alabama Air Pollution Control Rules and Regulations.

The public is invited to participate in this rulemaking by submitting written comments on these proposed actions.

Under 5 U.S.C. 605(b), I certify that this SIP revision will not have a significant economic impact on a substantial number of small entities. (See 46 FR 8709).

The Office of Management and Budget has exempted this rule from the requirements of section 3 of Executive Order 12291.

List of Subjects in 40 CFR Part 52

Air pollution control, intergovernmental relations, hydrocarborns, ozone.

Authority: 42 U.S.C. 7401-7642.

Dated: March 19, 1986.

Sanford W. Harvey, Jr.,

Acting Deputy Regional Administrator.

[FR Doc. 86-15419 Filed 7-8-86; 8:45 am]

BILLING CODE 6560-50-M

---

40 CFR Part 81

[Region II Docket No. 64; A-2-FRL-3046-4]

Designation of Areas for Air Quality Planning Purposes; Revisions to Section 107 Attainment Status Designations for the Commonwealth of Puerto Rico

AGENCY: Environmental Protection Agency.

ACTION: Proposed rule.

SUMMARY: This notice announces the Environmental Protection Agency's proposed approval of a request from the Commonwealth of Puerto Rico to revise the air quality designation of the Catano Air Basin from "cannot be classified" to "better than national standards" with respect to the primary and secondary sulfur dioxide standards. Such designations are required by section 107(d) of the Clean Air Act, and may be revised at the request of a state. This action means that the air quality in the Catano Air Basin will be designated as "better than national standards" for the sulfur dioxide primary and secondary standards.

DATE: Comments must be received on or before August 8, 1986.

ADDRESSES: All comments should be addressed to: Christopher J. Daggett, Regional Administrator, Environmental Protection Agency, Region II Office, Jacob K. Javits Federal Building, 26 Federal Plaza, New York, New York 10278.

Copies of the Commonwealth's request are available for public inspection during normal business hours at:

U.S. Environmental Protection Agency, Air Programs Branch—Room 1005; Region II Office, Jacob K. Javits Federal Building, 26 Federal Plaza, New York, New York 10278

Environmental Quality Board, 204 Del Parque Street, Santure, Puerto Rico 00910.

FOR FURTHER INFORMATION CONTACT: William S. Baker, Chief, Air Programs Branch, U.S. Environmental Protection Agency, Region II Office, Jacob K. Javits Federal Building, 26 Federal Plaza, New York, New York 10278, (212) 264-2517.

SUPPLEMENTARY INFORMATION: Section 107(d) of the Clean Air Act directed each state to submit to the Administrator of the Environmental Protection Agency (EPA) a list of national ambient air quality standard attainment status designations for all areas within the state. EPA received such designations from the states and promulgated them on March 3, 1978 (43 FR 8962). As authorized by the Clean Air Act, these designations have been revised from time to time at a state's request after EPA review and approval.

State Submittal

On October 15, 1985 the Commonwealth of Puerto Rico's Environmental Quality Board (EQB) submitted a request to revise the air quality designation for the Catano Air Basin from "cannot be classified" to "better than national standards" with regard to the area's attainment of the sulfur dioxide primary and secondary standards. The redesignation request is based on the results of dispersion modeling and air quality monitoring data in the Catano Air Basin.

EPA's Review Criteria

In order to approve the redesignation of an area from "cannot be classified" to "better than national standards," EPA generally requires a showing of attainment through use of a dispersion modeling analysis and a showing that

the most recent eight consecutive quarters of air quality data in the area show attainment.

EPA's Findings and Proposed Action

On October 20, 1983 (48 FR 48665) EPA approved a revision to the Puerto Rico Implementation Plan concerning the fuel oil sulfur content limitations applicable to many individual sources.

The approval was based upon a dispersion modeling demonstration that met all applicable EPA requirements. This demonstration showed that all sulfur dioxide national ambient air quality standards would be attained within the area currently proposed to be designated as "better than national standards." This fact coupled with no measured violation of the standards would have been sufficient to support a redesignation to "better than national standards" had a request been submitted at the time. However, such a request was not submitted until October 15, 1985, as described in today's notice. To support this request for redesignation, the EQB submitted the most recently available air quality measurements from four sites in the Catano area recorded during the 1979–1982 period. This air quality data indicates that all concentrations were substantially better than national ambient air quality standards for sulfur dioxide.

Since both dispersion modeling and air quality monitoring data show attainment, EPA proposes to approve the Commonwealth's request to redesignate the Catano Air Basin to "better than national standards." EPA's proposed approval of this redesignation request meets the requirements of section 107 and 301 of the Clean Air Act and applicable EPA guidelines.

Interested persons are invited to comment on the subject proposal and on whether it meets Clean Air Act requirements. Comments received by August 8, 1986 will be considered in EPA's final decision. All comments received will be available for inspection in the Region II Office of EPA, at 26 Federal Plaza, Room 1005, New York, New York 10278.

Under 5 U.S.C. 605(b), the Administrator has certified that redesignations do not have a significant economic impact on a substantial number of small entities. (See 46 FR 8709). The Office of Management and Budget has exempted the rule from the requirements of section 3 of Executive Order 12291.

List of Subjects in 40 CFR Part 81

Air pollution control, National parks, and Wilderness areas.

Authority: 42 U.S.C. 7401–7642.

Dated: March 6, 1986.

Christopher J. Daggett,

Regional Administrator.

[FR Doc. 86–15421 Filed 7–8–86; 8:45 am]

BILLING CODE 6560-50-M

---

40 CFR Part 81

[(FL-017) (A-4-FRL-3046-3)]

Designation of Areas for Air Quality Planning Purposes; Redesignation of Ozone Nonattainment Areas in Florida

AGENCY: Environmental Protection Agency.

ACTION: Proposed rule and withdrawal of proposed rule.

SUMMARY: EPA today proposes to approve the request by Florida to redesignate Orange County from nonattainment to attainment for ozone. The redesignation of Orange County to attainment is based on two years of quality assured monitoring data without an exceedance at one site, three years of ambient monitoring data showing a calculated expected exceedance of less than 1.0/year at a second site, and implementation of an EPA-approved control strategy.

Furthermore, this notice withdraws a proposal published on November 28, 1984 (49 FR 46767), to redesignate Duval County as attainment for ozone. Since publication of the proposed rule Duval County has had two exceedances of the ozone standard, resulting in an expected exceedance greater than 1.0/year.

The public is invited to submit written comments on this proposed action.

DATE: To be considered, comments must reach us on or before August 8, 1986.

ADDRESSES: Written comments should be addressed to Mr. Thomas Hansen of EPA Region IV's Air Programs Branch (see EPA Region IV address below). Copies of the materials submitted by Florida may be examined during normal business hours at the following locations:

Environmental Protection Agency Region IV, Air Programs Branch, 345 Courtland Street NE., Atlanta, Georgia 30365

Bureau of Air Quality Management, Florida Department of Environmental Regulation, Twin Towers Office Building, 2600 Blair Stone Road, Tallahassee, Florida 32301–8241.

FOR FURTHER INFORMATION CONTACT: Mr. Thomas Hansen, Air programs Branch, EPA Region IV, at the above address and telephone number 404/347–4292 or FTS 257–4292.

SUPPLEMENTARY INFORMATION: On May 14, 1981, (46 FR 26640) EPA gave full approval to Florida's Part D State Implementation Plan (SIP) for ozone. On August 12, 1983, the Florida Department of Environmental Regulation (FDER) submitted to EPA a revision to Florida's SIP. This revision, among other changes, proposed to redesignate as attainment seven ozone nonattainment counties: Broward, Dade, Duval, Hillsborough, Orange, Palm Beach, and Pinellas. Because of a questionable ozone exceedance, the Broward, Dade, and Palm Beach County redesignations were put on hold until an additional year of monitored data could be obtained. The Hillsborough and Pinellas County redesignation was withdrawn due to exceedances in Hillsborough. The Orange County redesignation was put on hold until sufficient data could be obtained at the Seminole monitoring site. On July 25, 1984, FDER requested that EPA take no formal action on their August 12, 1983, redesignation request for all areas but Duval County. FDER Proposed to reactivate their request for redesignation of any or all of these counties if and when new information supporting such a request became available.

On August 29, 1985, the FDER submitted a request to redesignate Orange County to attainment, along with the technical support data detailing the volatile organic compound (VOC) emission reducitons in Orange County. In order to redesignate a nonattainment area, EPA Policy requires that three years of ozone data show an expected exceedance calculation of less than or equal to 1.0/year. The most recent eight quarters of quality assured ambient air data may suffice provided that no exceedances have occurred and additional data are not available. All options must be accompanied by a demonstration of implementation of an EPA-approved control strategy. This demonstration must be adequate to maintain the ozone standard. Generic revocation of Group I and II CTG RACT regulations will not be allowed, as control of these categories of sources is considered to be the minimum level of control constituting RACT, which is necessary to assure the maintenance of the NAAQS.

Florida has submitted ambient air quality data collected at two monitoring sites in Orlando, Florida. The basis for the redesignation request is two years of quality assured ozone monitoring data without an exceedance at the Seminole County site, and three years of quality assured ozone monitoring data, with the calculated expected exceedance less

than 1.0/year, at the Orange County site. These two monitoring locations represent the urban area of Orlando, Florida. While the Seminole County monitor has been in place for more than eight quarters and has not measured any exceedances since at least 1980, the data prior to 1983 did not meet the quality assurance guidelines, which require, in part that valid data be collected for 75% of the hours in the ozone season. EPA policy allows for the use of eight quarters of ozone data showing no exceedances when three years is not available. Specifically, the most recent two years of air quality data (1983 and 1984) for Seminole County, and the most recent three years of air quality data (1982, 1983, and 1984) for Orange County are summarized below:

	Exceedances (ppm)	Number of expected exceedances	NAAQS ozone [2] (ppm)
Seminole Co.:			
1983	none	0	0.12
1984	none	0	
Total	0 exceedances	0	
Orange Co.:			
1982	none	0	
1983	.130	1.2	
1984	none	0	
Total	1 exceedance	[1] 0.4	

[1] Three year average.
[2] Not to be exceeded more than once per year.

In addition to the ozone monitored data, Orange County has implemented an EPA-approved control strategy. In the 1979 SIP submittal, the Orlando Urban Area Metropolitan Planning Organization performed a rollback calculation demonstrating that a 20% reduction of VOC emissions was required. The actual VOC emission reductions achieved from 1979 to 1984, was 23.7%.

For a more detailed discussion, please refer to the Technical Support Document which is available for inspection at the EPA Region IV office.

On the basis of these air quality data showing attainment and evidence of an implemented EPA-approved control strategy, EPA proposes to approve the redesignation of Orange County, Florida from ozone nonattainment to attanment.

In 1985, Duval County monitored two exceedances of the ozone standard. These two exceedances, combined with no exceedances in 1984 and two exceedances monitored in 1983, result in a calculated expected exceedance greater than 1.0. On the basis of these air quality data, EPA herewith withdraws its proposal of November 28, 1984 (49 FR 46767), to redesignate Duval County, Florida from nonattainment to attainment for ozone.

Proposed Action

EPA is today proposing to approve the redesignation of the Orange County, Florida ozone nonattainment area on the basis of quality assured air quality data and an EPA-approved implemented control strategy. The public is invited to participate in this rulemaking by submitting written comments on the proposed action.

Under 5 U.S.C. 605(b), the Administrator has certified that area redesignations do not have a significant economic impact on a substantial number of small entities. (See 46 FR 8709).

The Office of Management and Budget has exempted this rule from the requirements of section 3 of Executive Order 12291.

List of Subjects in 40 CFR Part 81

Air pollution control. National parks. Wilderness areas.

Authority: 42 U.S.C. 7401-7642.

Dated: March 19, 1986.

Sanford W. Harvey, Jr.,

Acting Deputy Regional Administrator

[FR Doc. 86-15420 Filed 7-8-86; 8:45 am]

BILLING CODE 6560-50-M

---

40 CFR Parts 260, 261, 262, 264, 265, 268, 270, and 271

[FRL-3045-8]

Hazardous Waste Management System: Identification and Listing of Hazardous Waste; Land Disposal Restrictions

AGENCY: Environmental Protection Agency (EPA).

ACTION: Notice of availability of reports.

SUMMARY: On January 14, 1986 EPA proposed a framework for a regulatory program to implement the Congressionally mandated land disposal prohibitions (51 FR 1602). This framework proposed use of a leaching test, known as the Toxicity Characteristic Leaching Procedure (TCLP) for use in determining whether applicable hazardous waste treatment standards have been achieved. On June 13, 1986 the Agency further proposed use of the TCLP in amending its hazardous waste identification regulations under Subtitle C of the Resource Conservation and Recovery Act (RCRA), by expanding the Toxicity Characteristic to include additional chemicals (51 FR 21648). Today's Federal Register notice indicates the availability of several reports that further support the TCLP, and the analytical methods to be used to analyze TCLP extracts.

DATE: Comments on the noticed reports must be submitted on or before August 8, 1986.

ADDRESSES: One original and three copies of all comments on the noticed reports, identified by the docket number F-86-TCS1-FFFFF, should be sent to the following address: EPA RCRA Docket (S-212), U.S. Environmental Protection Agency (WH-562), 401 M Street SW., Washington DC 20460. The EPA RCRA docket is located in the sub-basement area at the above address, and is open from 9:30 a.m. to 3:30 p.m., Monday through Friday, excluding Federal holidays. To review docket materials, the public must make an appointment by calling Mia Zmud at 475-9327 or Kate Blow at 382-4657. A maximum of 50 pages of material may be copied from any one regulatory docket at no cost. Additional copies cost $.20/page. The documents noticed in today's **Federal Register** are available for viewing and copying in the docket.

FOR FURTHER INFORMATION CONTACT: For general information contact: The RCRA Hotline, Office of Solid Waste (WH-562), U.S. Environmental Protection Agency, 401 M Street SW., Washington DC 20460, (800) 424-9346 toll-free or (202) 382-3000.

For information on specific aspects of the noticed reports contact: Todd A. Kimmell, Office of Solid Waste (WH-562B), U.S. Environmental Protection Agency, 401 M Street SW., Washington DC 20460, (202) 382-4770.

SUPPLEMENTARY INFORMATION:

I. Background

On January 14, 1986 EPA proposed to use the Toxicity Characteristic Leaching Procedure (TCLP) in it's Land Disposal Restrictions (LDR) regulations, to determine whether applicable treatment standards have been achieved (51 FR 1602). The TCLP was additionally proposed on June 13, 1986 as a replacement for the current Extraction Procedure (EP) leaching test (51 FR 21648).

As noted in the preamble to the Toxicity Characteristic rule, several efforts designed to evaluate the performance of the method, as well as efforts to further investigate analytical methods for analysis of the TCLP extracts, were still underway at the time of proposal. Most of these efforts have now been completed.

The purpose of today's **Federal Register** notice is to indicate the availability of the completed reports for

comment. These reports are described in the following sections of this notice.

II. Reports Supporting TCLP

The following reports describe the results of TCLP single- and multi-laboratory precision and ruggedness evaluations that have not previously been noticed for comment. Note that one additional activity, specifically EPA's TCLP multi-laboratory evaluation, is still underway. EPA expects to notice the report describing this study once the work is completed.

(1) Williams, L.R., C.W. Francis, M.P. Maskarinec, D.R. Taylor and N. Rothman. Single Laboratory Evaluation of Mobility Procedure For Solid Waste. U.S. EPA Environmental Monitoring Systems Laboratory. Las Vegas, Nevada. March, 1986.

(2) S-Cubed. Single Laboratory Testing of the Toxicity Characteristic Leaching Procedure (TCLP) Using Conventional Apparatus. Final Report. U.S. EPA Contract 68-03-1958. February, 1986.

(3) S-Cubed. Precision Evaluation of the TCLP Protocol For Volatile Contaminants. Final Report. U.S. EPA Contract 68-03-1958. June, 1986.

(4) Energy Resources Company (ERCO). Ruggedness Evaluation of the ZHE Protocol. Final Report. U.S. EPA Contract 68-01-7075. June, 1986.

(5) Electric Power Research Institute (EPRI). Round-Robin Evaluation For Selected Elements And Anionic Species From TCLP and EP Extractions. Research Project RP2485-08.

III. Analytical Methods for TCLP Extracts

The following reports describe the results of further work the Agency has completed regarding the evaluation of analysis methods for use in performing analyses of TCLP extracts.

(1) Research Triangle Institute (RTI). Evaluation of Analytical Procedures Supporting The Toxicity Characteristic Leaching Procedure (TCLP). Part II—Evaluation of SW-846 Methods 3010, 6010, and 7470. U.S. EPA Contract 68-01-7266. April, 1986.

(2) CompuChem Laboratories. An Evaluation of the Ability of SW-846 Methods 3510/8270 to Analyze for Selected Chemicals in Toxicity Characteristic Leaching Procedure Extracts (Solutions). U.S. EPA Contract 68-01-7266. May, 1986.

(3) CompuChem Laboratories. An Evaluation of the Ability of SW-846 Method 8240 to Analyze for Selected Chemicals in Toxicity Characteristic Leaching Procedure Extracts (Solutions). U.S. EPA Contract 68-01-7266. May, 1986.

(4) CompuChem Laboratories. An Evaluation of the Ability of SW-846 Methods 3510/8080 to Analyze for Selected Chemicals in Toxicity Characteristic Leaching Procedure Extracts (Solutions). U.S. EPA Contract 68-01-7266. May, 1986.

(5) CompuChem Laboratories. An Evaluation of the Ability of SW-846 Methods 3510/8270 to Analyze for Selected Chemicals in Toxicity Characteristic Leaching Procedure Extracts (Solutions). U.S. EPA Contract 68-01-7266. May, 1986.

(6) CompuChem Laboratories. An Evaluation of the Ability of SW-846 Methods 3510/8080 to Analyze for Selected Chemicals in Toxicity Characteristic Leaching Procedure Extracts (Solutions). U.S. EPA Contract 68-01-7266. May, 1986.

List of Subjects in 40 CFR Parts 260, 261, 262, 264, 265, 268, 270, and 271

Administrative practice and procedure, Air pollution control, Chemicals, Confidential business information, Environmental protection, Hazardous materials, Hazardous materials transportation, Hazardous substances, Hazardous waste, Imports, Indian lands, Insurance, Intergovernmental relations, Natural resources, Labeling, Packaging and containers, Penalties, Recycling, Reporting and recordkeeping requirements, Security measures, Surety bonds, Waste treatment and disposal, Water pollution control, Water supply, Superfund.

Dated: June 27, 1986.

J.W. McGraw,

Acting Assistant Administrator for Solid Waste and Emergency Response.

[FR Doc. 86-15422 Filed 7-8-86; 8:45 am]

BILLING CODE 6560-50-M

DEPARTMENT OF HEALTH AND HUMAN SERVICES

Office of the Secretary

42 CFR Parts 405, 420, 455, and 474

Medicare and Medicaid Programs: Fraud and Abuse; Revisions to OIG's Sanction Authorities

AGENCY: Office of the Secretary, HHS Office of Inspector General (OIG).

ACTION: Proposed rule.

SUMMARY: This proposed rule would implement section 2333 of Pub. L. 98-369, the Deficit Reduction Act, by providing for the suspension of certain entities owned or controlled by individuals convicted of a Medicare or Medicaid-related crime. Specifically, this proposed rule would set forth procedures for (1) notifying affected entities and organizations of such suspension actions, (2) establishing the length of each suspension, and (3) providing for appeals and reinstatement of suspended entities. In addition, this proposed rule would expand or revise existing provisions relating to the suspension, exclusion and termination of parties participating in the Medicare or Medicaid programs, and would clarify State agency responsibilities with regard to waiver requests arising from any suspension actions.

The purpose of these proposed revisions is to strengthen the enforceability of existing sanction requirements, and to prevent specific abusive and fraudulent practices against the Medicare and Medicaid programs.

DATES: To assure consideration, comments should be received by August 25, 1986.

ADDRESS: Address comments in writing to: Office of Inspector General, Department of Health and Human Services, Attention: LRR-4-P, Room 5246, 330 Independence Avenue, SW Washington, DC 20201.

If you prefer, you may deliver your comments to Room 5643, 330 Independence Avenue, SW., Washington, DC. In commenting, please refer to file code LRR-4-P. Agencies and organizations are requested to submit comments in duplicate.

Comments will be available for public inspection beginning approximately two weeks after publication in Room 5643, 330 Independence Avenue, SW., Washington, DC 20201, on Monday through Friday of each week from 9:00 a.m. to 5:00 p.m. (202) 472-5270.

FOR FURTHER INFORMATION CONTACT: Ronald Ritchie, (301) 594-1832.

SUPPLEMENTARY INFORMATION:

I. Excluding Entities Owned or Controlled by Individuals Convicted of Medicare or Medicaid Related Crimes

A. Background

Prior to the enactment of Pub. L. 98-369, the Deficit Reduction Act of 1984 (DEFRA), the Secretary had limited authority to exclude entities that were owned, controlled or operated by an individual convicted of a program-related crime. Under section 1866(b)(2)(G) of the Social Security Act, if a provider failed disclose information regarding its ownership or control in accordance with section 1126(a) of the Act, the Secretary was authorized to terminate its provider agreement. In addition, in accordance with section 1866(a)(3) of the Act, the Secretary could refuse to enter into or renew existing provider agreements with providers that are owned or controlled by individuals whose agreements had been terminated as a result of failure to disclose such information. However, once disclosure provisions under section 1126(a) were complied with, no authority existed for the Secretary to terminate existing provider agreements based on

ownership or control by individuals convicted of program-related crimes.

B. Section 2333 of Pub. L. 98–369

Section 2333 of Pub. L. 98–369, amending section 1128 of the Act, specifically enables the Secretary to exclude from Medicare participation certain entities owned or controlled by persons convicted of a Medicare or Medicaid-related crime. Under this section, the Secretary may exclude from Medicare participation any entity in which an individual convicted of a program-related crime (i) has a 5 percent or more ownership or controlling interest, or (ii) serves as an officer, director, agent or managing employee. The section further provides that an entity shall be barred for such period of time as determined by the Secretary. (See discussion in I.E. of ths preamble regarding length of suspension).

Section 2333 also permits the Secretary to direct State Medicaid agencies to exclude an entity from participation in the Medicaid program when the entity had been suspended from Medicare under this provision. In addition, the statute directs the Secretary to notify the State or local authorities responsible for the licensing or certification of the affected entity, and request that appropriate sanctions be taken against the entity in accordance with applicable State laws and policy. State and local authorities, in turn, are to keep the Secretary and the Inspector General informed as to any actions taken in response to these requests.

The provisions of section 2333 of DEFRA apply to individuals convicted after July 18, 1984, the effective date of the statute.

C. Applicability of Section 2333 DEFRA

As indicated, section 2333 of DEFRA extends the Secretary's authority to terminate agreements with any entity in which ownership or control interest is held by an individual convicted of a program-related criminal offense, or an entity in which an officer, director, agent or managing employee has been convicted of such a criminal offense. We have determined that section 2333 is applicable to all institutions, suppliers of services and any other organizations that may bill and receive Medicare reimbursements. This interpretation is based on the statutory language that refers to "entities" rather than just providers or institutions. In addition, the statutory language refers to barring entities from program participation rather than terminating an agreement, thereby implying that organizations that are not required to have a provider agreement are subject to these sanction provisions as well.

D. Suspension of Certain Entities

Under these proposed regulations, the Office of Inspector General (OIG), based on its investigation and prior to the issuance of a forml notice, would apprise the entity of possible sanction actions as a result of the entity's association with the suspended individual. When the OIG specifically determines that the relationship between a convicted individual and a related entity falls within the scope of section 2333, the OIG may provide formal written notice to the entity stating that the entity will be suspended from Medicare participation beginning 15 days from the date of the notice (42 CFR 420.122a). The entity will have an opportunity to provide evidence and information to show that the necessary ownership or control relationship does not exist or that any previous relationship has ceased. Based on consideration of available evidence and information, the OIG will determine whether to impose similar sanctions against the related entity. As indicated, the suspension of related entities under this provision remains a discretionary authority. Our intent under these proposed regulations would not be simply to suspend such entities from program participation, but rather to have these entities take proper action to divest themselves of any direct financial or controlling relationship with these sanctioned individuals.

In addition, as specified in the proposed revisions to 42 CFR 420.124, the Secretary is to notify State Medicaid agencies of the suspension action in order that they can properly suspend the entity from participation in the Medicaid program, if required, and provide notice to the general public and the State and Area Agencies on Aging of any sanction action taken. We believe that notification to the State and Area Agencies and Aging, established under Title III of the Older Americans Act, is necessary because these agencies serve as important resources to Medicare beneficiaries seeking information about and referrals to medical care and related services.

E. Length of Suspension

We are also proposing in the new 42 CFR 420.122a that the suspension period for entities owned, operated, or controlled by an individual convicted of a program-related crime be for the same period of time as the suspension imposed on the convicted individual, and that the suspension continue until such time as the convicted individual is reinstated.

While the length of suspension imposed by the Secretary on the entity would be the same as the length of suspension imposed on the convicted individual, a State agency may impose a longer period of suspension under its own sanction authorities. While regulations at 42 CFR 455.211(b) currently reflect this broad principle, we are proposing to amend 42 CFR 420.123 to ensure that suspended parties have notice of State authority to impose additional sanctions.

F. Reinstatement of Suspended Entities

Because of entity's suspension under this provision is based on its relationship with an individual convicted of a program-related crime, we are proposing in 42 CFR 420.132 that the entity be reinstated automatically when the individual is reinstated. If early reinstatement is sought, however, an entity must apply for reinstatement in accordance with the procedures set forth in that section. (Note that an entity that is subject to survey and certification by HCFA may need to be recertified prior to reinstatement if its certification lapses during the period of its suspension.)

An entity may request early reinstatement if (i) the convicted individual's ownership or controlling interest in the entity has been reduced to less than 5 percent; (ii) the individual no longer serves as an officer, director, agent or managing employee of the entity; or (iii) the individual has terminated his or her relationship with the entity. There may be instances, however, where the convicted individual retains an ownership or controlling interest of 5 percent or more in an entity and the entity is unable to terminate this relationship. In these situations, if the entity can effectively demonstrate to the OIG that, due to circumstances beyond its control, it is unable to terminate the relationship, and OIG may grant early reinstatement.

Nothwithstanding any request for early reinstatement under this provision, the suspension will remain in effect until the OIG issues a written decision regarding reinstatement.

G. Appeals

We are proposing to revise 42 CFR 420.128 to include appeal procedures for entities suspended under section 2333. These procedures include a specific list of issues that may be appealed by a suspended entity. The list would be limited to those issues considered by the OIG in determining whether and for how

long to suspend the entity. Specifically, the entity could appeal whether the OIG correctly found that it met the criteria set forth in 42 CFR 420.1221a, and whether the OIG imposed the same suspension period as that established for the convicted individual. Because these are the only issues considered by the OIG in imposing a suspension on the entity, we believe these should be the only issues appealable by an entity.

In addition, for the sake of economy and increased efficiency, we are proposing to permit the OIG, the individual or the entity whose relationship with the individual caused the suspension, to request that appeals by the individual and the related entity be joined together into a single hearing.

II. Revisions to Appeal and Reinstatement Procedures

In addition to the proposed changes implementing section 2333 of DEFRA, we are proposing a number of significant changes in existing regulations affecting the general appeal process and reinstatement procedures for parties excluded or terminated from the Medicare program for fraud and abuse, or parties suspended from Medicare based on conviction of a program-related crime. Our experience in handling sanction cases under sections 1128(a) and 1862(d) of the Act has shown that these proposed changes in the regulations are needed to strengthen enforcement of our existing statutory authority and to further tailor the appeal process to the particular requirements of sanction hearings.

A. Appeal Procedures

This section addresses proposed revisions in the appeal procedures involving exclusion, termination and suspension actions undertaken by the OIG. With the exception of the discussions in II.A.3 and II.A.4. of this part regarding the burden of proof and location of hearings under suspension actions, the appeal procedures being proposed would apply equally to exclusion, termination and suspension actions.

Exclusions and Terminations

Any party excluded or terminated from the Medicare program under 42 CFR 420.101 may appeal the sanction determination. The appeal by a sanctioned party is presently governed by general administrative appeal procedures set forth in 42 CFR Part 405, Subpart O. The procedures currently in Subpart O, however, apply to a variety of determinations and appeals under the Medicare program, many of which are inapplicable to sanction determinations by the OIG under sections 1862(d) and 1866(b)(2)(D), (E) and (F) of the Act. In order to simplify the understanding of the appeals process for sanction determinations, we are proposing (1) to remove determinations under sections 1862(d) and 1866(b)(2)(D), (E) and (F) from the general coverage of Subpart O and (2) to add a new regulatory provision, 42 CFR 420.116, to specifically incorporate only those provisions of Subpart O that property apply to sanction determinations.

Suspensions

We are also proposing to revise 42 CFR 420.128 to include procedures for entities suspended under the Medicare program. Similar to the discussion in section I. of this preamble, these procedures would include a specific list of issues that may be appealed by a suspended entity, limited to those issues considered by the OIG in determining whether and for how long to suspend the entity. We are also proposing to incorporate into 42 CFR 420.128 a number of useful administrative procedures currently contained in 42 CFR 405, Subpart), and to adopt some new provisions to expedite and clarify the appeal process.

1. *Presence of an investigator and a medical expert.* Under these proposed changes, we are providing that both a medical expert and the OIG representative responsible for preparing or presenting the case may be present at the counsel table throughout the hearing process, as well as give testimony at the hearing as appropriate (42 CFR 420.116(f) and 420.128(j)). The presence of an OIG investigator or medical expert has been an issue in some cases where such person is also to be a witness. To avoid collusion and the fabrication of testimony, customary practice is to exclude witnesses so that they cannot hear testimony of other individuals. However, we believe that an exception of this practice is appropriate in the case of sanction hearings. Our proposed exception to the witness exclusion practice comports with standard practices in the Federal courts established by Rule 615 of the *Federal Rules of Evidence.* Under this rule, a witness in Federal court may be present during the testimony of other witnesses if he or she (a) is an employee of a party who is not a natural person, e.g., a corporation, and is that party's designated representative, or (b) is a person whose presence is essential to the presentation of the party's case. These exceptions apply to individuals such as (i) police officers in charge of a case investigation, (ii) agents who handled the transaction being litigated, or (iii) experts needed to advise counsel in the management of litigation. These roles are very similar to the role served by an OIG employee who prepares or presents cases involving an administrative hearing, and by a medical expert who advises the OIG on medical issues in litigation. Consequently, we are formally setting out in these proposed regulations this provision to allow such individuals to be present throughout the hearing, as well as to give testimony as appropriate.

2. *Scope of hearing.* Questions have also arisen over efforts of introduce items and information not set forth in the OIG's original notice letter forwarded to affected parties. As a practical matter, Administrative Law Judges (ALJs) have traditionally allowed petitioners to introduce further evidence at hearings related to information that may not be set forth in the notice letter. To ensure that the OIG is afforded the same opportunity to introduce items or information that may not be set forth in the notice letter, we are proposing to clarify this provision to permit this latitude in introducing additional information at hearings (42 CFR 420.116(e) and 420.128(h)).

3. *Burden of proof under suspension actions.* We are also proposing to clarify which party has the burden of proof in appealing suspension actions by specifically stating in regulations at 42 CFR 420.128(i) that the burden of proof at the hearing is on the petitioner. Of course, the OIG will present its *prima facie* case in the notice letter to the suspended party. The letter sets forth the basis for OIG's determination that the suspension is required under section 1128(a) of the Act, and the evidence in support of OIG's decision as to the length of the suspension. In those instances where the suspended party requests a hearing, the burden shifts to the suspended party to show that OIG's determination was unreasonable.

4. *Additional provisions.* In addition, we are setting forth the following provisions and clarifications in the overall appeal procedures:

- *Prehearing conferences*—Under these proposed revisions, we are providing for a prehearing conference prior to the formal hearing (42 CFR 420.116(c) and 420.128(f)). The experience of the OIG has shown that such prehearing conferences serve to narrow many of the outstanding issues to be addressed at the hearing, and thus help expedite the formal appeal process.
- *Location of hearing*—In suspension cases, we are proposing that hearings be held in the city in which the appropriate regional office is located, except where

good cause is shown for holding the hearing elsewhere (420.128(g)). This is proposed for reasons of administrative convenience and economy since most OIG investigators and other support personnel, as well as sufficient hearing facilities, are located in regional office cities.

• *Limitation on discovery*—We are specifically proposing that depositions, interrogatories, requests for admissions and other forms of prehearing discovery not be authorized (42 CFR 420.116(g) and 420.128(k)). Prehearing discovery is not provided under the Administrative Procedure Act and is rarely available in administrative hearings. We believe that full scale discovery is inappropriate in administrative hearings since civil discovery would unduly delay the streamlined administrative process. These revised regulations would still provide for those specific practices that serve to expedite the hearing process, such as the exchange of witness lists and hearing exhibits and discovery of documents.

• *ALJ authority*—In 42 CFR 420.116(g)(1) and 420(128(l)(1), we are proposing to make explicit the ALJ's authority to affirm, increase, reduce or reverse the sanction imposed by the OIG based on the evidence adduced at the hearing. In addition we are proposing to prohibit the ALJ from making a sanction period retroactive to a date prior to the effective date of the sanction set forth in the notice letter. A retroactive sanction period would be problematic for two reasons: (1) the sanctioned party and the public would not have received reasonable notice of the sanction, as required by statute, and (2) the Health Care Financing Administration (HCFA) would have a serious burden in conforming to a retroactive sanction period. HCFA would have to deny payment retroactively or claims submitted during the retroactive sanction period, since these claims would have been already properly paid at the time. HCFA would then have to calculate and attempt to collect an overpayment for claims submitted by the sanctioned party during this period. If HCFA were unable to collect the overpayment, the retroactive sanction period would result in a financial loss to the program as well. For these reasons, we are proposing that the ALJ be required to make any sanction period that he or she imposes effective from the date set forth in the notice letter.

In 42 CFR 420.116(g)(2) and 420.128(l)(2), we are proposing to provide the ALJ with explicit authority to sanction parties to an appeal for failure to comply with orders of the ALJ relating to the production of documents, witness lists and exhibits. The ALJ could, among other things, preclude the party failing to comply with an order from introducing exhibits at the hearing if no provided in a timely fashion, and could preclude the calling of witnesses if a witness list is not provided in a timely fashion. Further, the ALJ would have the explicit authority under this section to dismiss a case or rule in favor of the appellant if a party fails to prosecute or defend an appeal, and to refuse to consider motions or other actions not filed in a timely fashion. These, of course, are discretionary authorities. The ALJ would not be required to sanction a party for such failures and may decide not to impose a sanction when good cause for noncompliance or delay is shown.

Appeal procedures under 42 CFR Part 405, Subpart O, governing requests for a hearing, resolution of prehearing matters and the conduct of a hearing, as well as the appeal of a hearing decision, are also to be incorporated by reference under these proposed revisions.

B. Reinstatement Procedures

Current regulations do not directly address the status of reinstatement requests that are submitted pending completion of the appeal process. As a result, we are proposing a new provision in 42 CFR 420.130 to clarify that reinstatement procedures will remain in effect throughout the appeal process. Thus, pending completion of the appeal process, the OIG would consider a request for reinstatement only when the exclusion, termination or suspension period specified in the notice has expired. A request for reinstatement would not be considered prior to that date.

The status of such requests for reinstatement may arise in three specific instances during the appeal process:

1. *Expiration of initial OIG suspension period.* The first instance involves a situation where a party appeals either to an ALJ or to the Appeals Council, and while this appeal is pending , the initial suspension period specified in the OIG notice expires and the petitioner requests reinstatement. To avoid placing petitioners in an inequitable position, we believe that the OIG should consider the reinstatement request once the initial period expires, even though final agency action may ultimately result in a lengthier suspension. We believe that awaiting final agency action in such instance could penalize the petitioner's appeal by effectively extending the initial suspension period prior to any final action. Consequently, the date specified in the notice would remain in effect throughout the appeal process.

2. *Reduction of suspension; OIG appeal or appeal by both parties.* The second instance involves a situation where the OIC appeals to the Appeals Council an ALJ's decision to reduce a sanction period. In this situation, the petitioner would apply for reinstatement once the suspension period set by the ALJ expires, but prior to the date specified in OIG's initial notice. In this instance as well, we believe that the date specified in the OIC notice should remain in effect pending final review by the Council on the appeal. Under this provision, the OIG would not consider the reinstatement request made after the expiration of the period set by the ALJ if the period specified in the notice had not yet expired. We believe this interpretation to be fair since the ALJ's decision, pending Appeals Council review, is not a final agency action.

3. *Reduction of suspension; no OIG appeal.* This third situation involves the case where the ALJ reduces the sanction period; the petitioner appeals this action and the OIG does not. In this instance, the petitioner applies for reinstatement once the period set by the ALJ expires, but prior to the date in the notice and before final agency action. In this situation, we believe that the OIG should consider the request for reinstatement once the ALJ-set period expires to avoid possible unfairness to the petitioner. Where the OIG has not appealed, we believe the petitioner should have the advantage of the ALJ decision even though it is not a final agency action. To do otherwise in this situation could serve to penalize the petitioner for appealing the ALJ decision.

The proposed clarifications to this provision would not affect the early reinstatement procedures proposed above for an entity suspended as a result of its relationship with an individual convicted of a program-related crime.

Criteria for Reinstating Individuals

We are also proposing to set forth specific criteria and limitations for the OIG to consider when making a reinstatement determination. Currently, the OIG's policy is to base a decision to reinstate a party largely on the results of an investigation of the party's conduct since the suspension period began. We believe, however, that the criteria for such reinstatement determinations need to be further refined to provide reasonable assurance, based on a current assessment of whether the sanctioned party poses a risk to the

program, that the basis for the sanction action will not recur. The proposed regulations at 42 CFR 420.131 specify that the OIG, in making a reinstatement determination, would consider the sanctioned party's conduct *following* the date on which the sanction action was imposed. Conduct prior to the sanction date would only be considered by the OIG if the OIG was not aware of such activity or conduct at the time the original sanction was levied. Similarly, actions taken against the sanctioned party by other authorities subsequent to the OIG exclusion or suspension, and not based solely on the facts underlying the OIG's sanction action, could be considered.

III. Denial of Payments Under Sanction Actions

Under current regulations at 42 CFR 420.115 and 420.126, the assignment of a beneficiary's claim made on or after the effective date of an exclusion or suspension action, respectively, is considered invalid; Medicare policy provides for an assigned claim to be automatically processed and paid for as an unassigned claim by the program and the beneficiary be notified that the practitioner has been excluded or suspended from program participation (*Medicare Carriers Manual*, HIM-14, section 4165). We believe that these present provisions afford more protection to practitioners than is appropriate, and are not necessary to protect beneficiaries since the first claim submitted by a beneficiary after the exclusion or suspension of the provider will continue to be paid (42 CFR 420.115(b) and 420.126(d)).

Thus, we are proposing to revise existing regulations at 42 CFR 420.115 and 420.126 to state that the HCFA is to deny all assigned claims for payment for services furnished by an excluded or suspended party, and that the excluded or suspended party is to be notified that they may be subject to civil monetary penalties (CMP) for submitting a request for payment to the Medicare program for any services furnished during the sanction period. Payment for services furnished by the excluded or suspended party would also be denied to any provider or supplier employing the excluded or suspended party if the service was performed on or after the effective date of the sanction. Finally, payment would be denied for services furnished by a practitioner who, although not personally suspended or excluded, has contractually assigned any portion of his or her right to payment to a suspended or excluded party, such as a clinic.

Under these revised provisions, we are clarifying that an excluded or suspended practitioner or entity may still be liable for CMP with respect to claims presented, or caused to be presented, during the period of sanction regardless of whether HCFA pays the submitted claim. The CMP laws, set forth in section 1128A of the Act, provide that a person may be subject to penalties and assessments if he or she submits claims for which payment may not be made due to exclusion or suspension. While payment for the first claim submitted by a beneficiary for services performed by a sanctioned individual may be made in order to avoid hardship on beneficiaries unaware of the exclusion or suspension action, we are also stressing that this accommodation to program beneficiaries should not be construed as authorizing claims payment for the purposes of CMP liability, and should not serve as an escape clause or a loophole for a suspended party to continue furnishing reimbursable services. Excluded or suspended parties who present or cause to be presented such claims may still be subject to CMP.

We believe that these clarifications are consistent with the overall intent of the statute and with exiting regulatory intent

IV. Base Sanction Periods

Through this proposed rule, we are also providing for changes to 42 CFR 420.114 and 420.125, Duration of Exclusion or Termination, and Duration of Suspension, respectively, to reflect the establishment of base sanction periods. These regulatory provisions apply only to (i) exclusions under section 1862(d) of the Act, (ii) suspensions under section 1128(a) of the Act and (iii) terminations under section 1866 of the Act, and not to any other sanction authorities.

A. Duration of Exclusion and Termination Actions

In 42 CFR 420.114(c), we are providing for a minimum one year sanction period for cases warranting exclusion from the Medicare program or the termination of a provider agreement. The statute presently requires the Secretary to reinstate a party only when there is reasonable certainty that the abuses committed by the party have been corrected and are not set under these requirements, and the exclusion or termination period remains open-ended and variable. In addressing these sanction cases, we believe that a minimum period of one year for all exclusion and termination actions is necessary to allow sufficient time to evaluate the party's conduct and practice outside of the program.

If a party's exclusion or termination is reversed on appeal, the individual may submit claims for covered services provided during the period of exclusion or termination. This practice is established Departmental policy and is being made explicit in these proposed regulations.

B. Duration of Suspension Actions

In the case of suspension pursuant to section 1128(a) of the Act, we are also providing for a base suspension period (42 CFR 420.125(c)).

Under present policy, the suspension of an individual based on a conviction for a program-related crime is to continue until the party is reinstated in accordance with provisions set forth in 42 CFR 420.130 through 420.136. The suspension period specified by the OIG in the suspension notice remains in effect throughout the appeal process; the ALJ may reduce the suspension period but has no authority to order the reinstatement. Suspension continues until the OIG has made a determination and notified the party in writing of the reinstatement.

With respect to suspension actions, we are proposing to establish a base 5 year suspension period. This time period is not to be considered absolute and may be reduced or increased due to either mitigating or aggravating circumstances. A listing of factors and sources of information to be considered in adjusting this base suspension period is set forth in paragraphs (d) and (e) of the proposed revisions to 42 CFR 420.125. The list is not all inclusive, but rather is meant to emphasize that the OIG may rely on all credible sources of information regarding the suspended party's criminal activity in making a determination about the duration of suspenison. For example, the OIG considers the existence of counts in the criminal complaint or indictment on which the defendent was not convicted, just as a sentencing judge in a criminal case considers such information in making his or her decision. Information in the indictment has been held to be sufficiently reliable for this purpose, and in fact, "more reliable than the hearsay evidence which the sentencing judge can clearly consider, for unlike hearsay, the indictments are based on testimony given under oath and required the existence of probable cause to believe that" the offenses were committed. *U.S.* v. *Metz*, 470 F.2d 1140, 1142 (3rd Cir. 1972), *cert. den.* 41 U.S. 919 (1973).

We believe establishment of a base suspension period is necessary both to

deter individuals from engaging in fraudulent activity and to protect the financial integrity of the Medicare program. In addition, we believe application of these standards and consideration of specific aggravating or mitigating factors will help to promote greater consistency nationwide in setting periods of suspension.

V. State Guidelines for Requesting a Waiver of Suspension

We are proposing to revise 42 CFR 455.214 by providing greater specificity to State Medicaid agencies requesting waiver of a suspension action. Specifically, this revision would clarify the existing waiver provisions by setting forth guidelines for State to follow in requesting a waiver and by establishing conditions whereby a waiver may expire.

Existing provisions currently provide that the State Medicaid agency may apply for a waiver of an OIG-imposed suspension if it concludes that, because of a shortage of health care providers in a particular area, Medicaid patients would be denied adequate access to medical care. To permit greater State flexibility, we are proposing an additional provision to this section to allow waiver requests if the State agency concludes that, for other reasons, it is in its interest or in the interest of Medicaid beneficiaries that the party or entity not be suspended.

In addition, under current regulations there are no provisions for revoking a waiver, once granted, when the conditions for permitting such waiver no longer exist. These proposed changes to 42 CFR 455.214 would also provide for the reimposition of a suspension action if the conditions for granting the waiver cease to exist, and would limit waiver to the area serviced by the individual prior to the suspension. Pending approval of the waiver request, the suspension would remain in effect and the State agency would not notify the provider of the waiver until the OIG makes a determination and notifies the State agency in writing of its decision.

We believe that these provisions are consistent with the congressional intent regarding the waiver of the suspension requirements, and will decrease the potential for individuals to circumvent suspension action through existing waiver provisions.

VI. Other Technical Changes

We are also setting forth below a number of other technical changes we believe will provide greater consistency among existing program provisions and that will generally serve to strengthen the OIG's regulatory requirements.

A. Revised Definitions

We are proposing to change the definition of the term "convicted" in 42 CFR 420.2 to include any case where there has been a finding of guilt, a plea of guilty or a plea of *nolo contendere* (no contest). Under the current regulatory definition, an individual is considered "convicted" only if a judgment of conviction has been entered. We have found this definition to be inappropriately narrow. Some State laws, for example, permit individuals to plead guilty, or "no contest," to criminal statutes under either "deferred adjudication" or "probation without verdict" provisions. In such cases, the actual entry of judgment may be postponed or foregone entirely, or the record of judgment may be expunged following satisfactory completion of sentence. This action, in turn, allows the individual under the existing unduly narrow definition of "convicted" to escape suspension under section 1128(a) of the Act.

While the term "convicted" is not specifically defined by statute, we believe it clear that Congress, in enacting section 1128(a), intended to preclude from program participation those individuals who specifically commit crimes against Medicare and Medicaid. The Supreme Court has held that State expunction statutes are not assumed to govern the determination of who has been "convicted" for purposes of a Federal statute, particularly when the application of the State statute would frustrate the purpose of the Federal statute. *Dickerson* v. *New Banner Institute,* 103 S. Ct. 986 (1983). Thus, we believe that changing the current definition of "convicted" to include cases in which there has been a finding of guilt, a plea of guilty or a plea of *nolo contendere* is permissable and will more clearly meet with the intent of Congress in this area.

Additionally in 42 CFR 420.2, the terms "control," "entity," "petitioner," "sanction," "suspension," and "termination" are being defined to clarify their precise meaning and to remove any ambiguity that might exist in these regulations, and the terms "exculsion" and "furnished" are being revised to further clarify their meanings.

B. Suspension of Employees of a Practitioner or a Supplier of Service

We are proposing to clarify subparagraph (b)(3) of 42 CFR 420.122 by further indicating that suspension from Medicare participation for conviction of a program-related crime will also apply to employees of practitioners and to suppliers of services. This provision is specifically designed to prevent the suspended party from receiving program payments through services performed by individuals in his or her employment. The employees, however, are not suspended from program participation as a result of this action for the duration of the employer's suspension, but rather are free to terminate their relationship with the suspended party and seek other employment that may be reimbursed under Medicare. The current regulations, as written, do not clearly apply to these individuals even though they may have been convicted of a program-related crime. We believe this current provision is unnecessarily restrictive and should be changed accordingly to encompass these groups of individuals.

In addition, we are also adding a new subparagraph (d) to 42 CFR 420.122 to specifically state that a suspension will continue until the convicted individual is reinstated in accordance with § 420.131. Although this policy has been an ongoing OIG practice, we are using the revision to subpargraph (b) of this section to clarify that only the OIG can grant a reinstatement in these circumstances.

C. Revisions to 42 CFR 420.136

We are proposing to delete the term "reinstate" currently contained in 42 CFR 420.136. These regulations concern a conviction of a suspended individual that is reversed or vacated on appeal. In such instances, the OIG will void the suspension and take appropriate measures to treat the party as if the conviction had never occurred. As such, the individual will be eligible to participate in Medicare retroactive to the date on which this vacated suspension was effective, and will be notified that the OIG has withdrawn the suspension and advised that claims for covered items and services furnished during the vacated suspension period may be submitted for payment.

Since "reinstate" does not accurately reflect the action taken in this instance and may cause some confusion in light of specific reinstatement procedures set forth in 42 CFR of 420.130, we are proposing to delete this term from the section. In addition, in accordance with the proposed provisions discussed above designed to implement section 2333 of DEFRA, these regulations are also being revised to state that the OIG, by voiding the conviction of a suspended individual, would also void the entity's suspension where such action was taken solely as a result of the individual's relationship with that entity.

D. Conforming Changes for Termination of Provider Agreements

We are proposing to make a substantial number of technical changes throughout the regulations to clarify that the "exclusion" rules apply equally to terminations of provider agreements under section 1866(b)(2) (D), (E) and (F) of the Act—authorities for which the OIG has responsibility. In addition, we are proposing to revise 42 CFR 420.101(c) to comport with statutory language that does not require that false statements on an application for payment be "knowing and willful" in order to justify termination of a provider agreement. We believe that current regulations, requiring knowing and willful falisfication or misrepresentation both for exclusions and for terminations of provider agreements, are unnecessarily restrictive on this point.

E. Deletion of 42 CFR 474.14(a)(2) and 474.54(a)(3)

We are proposing to delete § 474.14(a)(2) and 474.54(a)(3). Under these regulation sections, the assignment of a beneficiary's claim for items or services furnished by an excluded party on or after the effective date of exclusion is deemed invalid. The Health Care Financing Administration currently treats these claims as unassigned, automatically pays the program beneficiary, and notifies the beneficiary of the exclusion action taken. As discussed above in section III. of this preamble, however, we believe this procedure affords greater protection to practitioners than is required and is not necessary to protect the beneficiaries. Since we are now specifically stating in the revision of 42 CFR 420.115 that HCFA will not longer make payments for such assigned claims, the provisions contained in § 474.14(a)(2) and 474.54(a)(3) must also be deleted.

F. Further Revisions to 42 CFR 420.114

We are also considering whether to further define the term "mitigating circumstances" contained in 42 CFR 420.114(d)(4) for exclusions as we have proposed in 42 CFR 420.125 for suspensions. Any proposed refinements on limiting mitigating circumstances may be similar or identical to those being proposed in 42 CFR 420.125(e)(2), that is, whether the individual had a mental, emotional or physical condition prior to or contemporaneous with his or her violation of section 1862(d) that reduced his or her culpability. We specifically welcome comments on this point.

VII. Regulatory Impact Statement

A. Executive Order 12291

Executive Order 12291 requires the Department to prepare and publish an initial regulatory impact analysis for any proposed major rule. A major rule is defined as any regulation that is likely to: (1) have an annual effect on the economy of $100 million or more; (2) cause a major increase in costs or prices for consumers, individual industries, government agencies, or geographic regions; or (3) result in significant adverse effects on competition, employment, investment, productivity, innovation, or on the ability of United States-based enterprises to compete with foreign-based enterprises in domestic or export markets.

We have determined that these proposed regulations do not meet the criteria for a major rule as defined by section 1(b) of Executive Order 12291. As indicated, this proposed rule would, in general: (1) set forth criteria for suspending certain entities owned or controlled by individuals convicted on a program-related crime; (2) expand or revised existing provisions relating to the exclusion or suspension of individuals participating in Medicare and Medicaid; and (3) further clarify State Medicaid agency responsibilities with regard to waiver requests. As such, this proposed rule would have no direct effect on the economy or on Federal or State expenditures. Consequently, we have concluded that an initial regulatory impact analysis is not required.

B. Regulatory Flexibility Analysis

Consistent with the Regulatory Flexibility Act of 1980 (Pub. L. 96-354, 5 U.S.C. 604(a)), we prepare and publish an initial regulatory flexibility analysis for proposed regulations unless the Secretary certifies that the regulation would not have a significant economic impact on a substantial number of small business entities. The analysis is intended to explain what effect the regulatory action by the agency would have on small businesses and other small entities and to develop lower cost or burden alternatives. As indicated above, these proposed regulations would not have a significant economic impact. While some of the sanctions that States and the Federal Government could impose as a result of these regualtions may have an impact on small entities such as physicians, suppliers and other medical care providers, we do not anticipate that a substantial number of these small entities will be significantly affected by this rulemaking. Therefore, the Secretary certifies that this proposed regulation would not have a significant economic impact on a substantial number of entities.

C. Paperwork Reduction Act

Under the Paperwork Reduction Act of 1980 (Pub. L. 96-511), all Departments are required to submit to the Office of Management and Budget for review and approval any reporting or recordkeeping requirements contained in both proposed and final rules. It has been determined that this proposed rulemaking does not contain specific information collection requirements and would not increase the Federal paperwork burden on the public and private sector.

VIII. Other Required Information

Response to Comments

Because of the large number of comments we receive on proposed regulations, we cannot acknowledge or respond to these comments individually. However, in preparing the final rule, we will consider all comments and respond to them in the preamble to that document.

List of Subjects

42 CFR Part 405

Administrative practice and procedure, Health facilities, Health maintenance organizations (HMO), Health professions, Kidney diseases, Laboratories, Medicare, Reporting and recordkeeping requirements, Rural areas, X-rays.

42 CFR Part 420

Abuse, Administrative practice and procedures, Contracts (Agreements), Conviction, Convicted, Courts, Exclusion, Fraud, Health care, Health facilities, Health Maintenance Organizations (HMO), Health professions, Health Suppliers, Information (Disclosure), Lawyers, Medicaid, Medicare, Penalties, Reporting and recordkeeping requirements, Supervisions, Utilization and Quality Control Peer Review Orgnizations (PRO).

42 CFR Part 455

Abuse, Administrative practice and procedure, Claim, Conviction, Convicted, Exclusion, Grant-in-Aid program—health, Health care, Health facilities, Health professions, Information (Disclosure), Investigations, Medicaid, Medicaid Fraud Control Units, Medicaid personnel, Penalties, Reporting requirements, Suspension.

42 CFR Part 474

Health care, Health professions Penalties, Utilization and Quality Control Peer Review Organizations (PRO), Reporting and recordkeeping requirements.

IX. Recodification of OIG Regulations

The amendatory language contained in this rulemaking is being shown as proposing changes to the existing 42 CFR Chapter IV—Health Care Financing Administration. Final rulemaking action adopting these proposed changes will be incorporated into a new Chapter V—Office of Inspector General—Health Care Financing Programs.

PART 405—FEDERAL HEALTH INSURANCE FOR THE AGED AND DISABLED

I. 42 CFR Part 405, Subpart O would be amended as follows:

Subpart O—Providers of Services, Emergency Service Hospitals, Independent Laboratories, Suppliers of Portable X-Ray Services, Ambulatory Surgical Centers, End-Stage Renal Disease Treatment Facilities, and Persons; Determinations and Appeals Procedures

1. The authority citation for Subpart O continues to read as follows:

Authority Secs. 1102, 1866, 1869, 1871, and 1872, Social Security Act; 42 U.S.C. 1302, 1395cc, 1395ff, 1395hh, and 1395ii, unless otherwise noted.

2. Section 405.1501 would be amended by revising paragraphs (a)(4) and (a)(5), and by removing paragraph (a)(6) to read as follows:

§ 405.1501 Providers of services, emergency service hospitals, independent laboratories, suppliers of portable x-ray services, ambulatory surgical centers, end-stage renal disease treatment facilities and persons; determinations and appeals procedures.

(a) The provisions contained in this Subpart O shall govern the procedure for making and reviewing determinations with respect to:

* * * * *

(4) Whether an institution continues to remain in compliance with the qualifications for claiming emergency service reimbursement for a calendar year under the provisions of sections 1814(d) and 1835(b) of the Act; and

(5) Whether an independent laboratory, supplier of portable X-ray services, ambulatory surgical center, or end-stage renal disease treatment facility meets the appropriate conditions for coverage of its services (see Subparts M and N of this Part 405, Subpart B of Part 416 of this chapter, and Appendix to Subpart B of this Part 405).

PART 420—PROGRAM INTEGRITY

II. 42 CFR Part 420 would be amended as follows:

1. The authority citation for Part 420 continues to read as follows:

Authority: Sec. 1102, 1128, 1862(d), 1862(e), 1866(b)(2) (D), (E), and (F), 1871, 1902(a)(39), and 1903(i)(2) of the Social Security Act (42 U.S.C. 1302, 1320a-7, 1395y(d), 1395y(e), 1395cc(b)(2) (D), (E), and (F), 1395hh, 1396a(a)(39), and 1396b(i)(2), unless otherwise noted.

2. The table of contents for Part 420 would be amended by removing § 420.2 from Subpart A; revising the Subpart B title and the headings for §§ 420.100, 420.101, 420.114, 420.123, 420.130 and 420.132; and adding new entries for §§ 420.116, 420.122a and 420.131. The table of contents for Subparts A and B would be revised to read as follows:

Subpart A—General Provisions

Sec.
420.1 Scope and purpose.
420.3 Applicability of other regulations.

Subpart B—Exclusion, Termination or Suspension of Practitioners, Providers, Suppliers of Services, and Other Individuals or Entities

420.100 Basis, scope and definitions.

Exclusions or Terminations on Basis of Fraud or Abuse

420.101 Bases for exclusion and termination for fraud or abuse; exceptions.
420.105 Notice of proposed exclusions or termination for fraud or abuse.
420.107 Notice of exclusion or termination to affected party.
420.109 Notice to others regarding exclusion or termination.
420.114 Duration of exclusion and termination.
420.115 Effect of exclusion.
420.116 Appeal procedures.

Suspensions on Basis of Conviction of Program-Related Crime

420.122 Bases for suspension for conviction of program-related crime and individuals affected.
420.122a Suspension of certain entities.
420.123 Notice to affected individuals and entities of suspension for conviction of a program-related crime.
420.124 Notice to others regarding suspension for conviction of program-related crime.
420.125 Duration of suspension.
420.126 Effect of suspension.
420.128 Appeal procedures.

Reinstatement Procedures

420.130 Timing and method of request for reinstatement by parties other than entities.
420.131 Criteria for reinstatement of parties other than entities.
420.132 Criteria for reinstatement of entities suspended under § 420.122a.
420.134 Notice of action on request for reinstatement.
420.136 Reversed or vacated convictions of program-related crime.

* * * * *

3. In Subpart A, § 420.1 would be revised to read as follows:

Subpart A—General Provisions

§ 420.1 Scope and purpose.

This part sets forth provisions for the detection and prevention of fraud and abuse in the Medicare and Medicaid programs. It implements statutory sections, specifically identified in each subpart, aimed at protecting the integrity of the Medicare and Medicaid programs.

§ 420.2 [Redesignated as § 420.100(b)]

4. Section 420.2 would be redesignated as § 420.100(b).

5. Section 420.3 would be revised to read as follows:

§ 420.3 Applicability of other regulations.

Part 405, Subpart O of this chapter, contains detailed procedures for hearings and reviews that are made available under this part for exclusions and terminations on the basis of fraud and abuse, and for suspensions based on convictions for program-related crimes. The applicability of Part 405, Subpart O and other applicable appeal procedures is specified in §§ 420.116 and 420.118.

6. The Subpart B title would be revised to read as follows:

Subpart B—Exclusion, Termination or Suspension, of Practitioners, Providers, Suppliers of Services, and Other Individuals or Entities

7. The authority citation for Subpart B continues to read as follows:

Authority: Secs. 1102, 1128, 1842(j), 1862(d), 1862(e), 1866(b)(2)(D), (E), and (F), 1871, 1902(a)(39) and 1903(i)(2) of the Social Security Act (42 U.S.C. 1302, 1320a-7, 1395u(j), 1395y(d), 1395(e), 1395cc(b)(2)(D), (E), and (F), 1395hh, 1396a(a)(39), and 1396b(i)(2)).

8. In Subpart B, § 420.100 would be amended by designating the current text as paragraph (a) and revising it, and by revising definitions for the terms "convicted", "exclusion", "furnished" and "suspension", and by adding definitions for the terms "control", "entity", "ownership or control interest", "petitioner, "sanction" and "termination", in newly redesignated

paragraph (b). [Paragraph (b) is redesignated from § 420.21.]

§ 420.100 Basis, scope and definitions.

(a) *Basis and scope.* This subpart implements sections 1128, and 1866(b)(2)(D), 1862 (d) and (e), (E) and (F) of the Act. It sets forth criteria and procedures for terminating provider agreements, for excluding practitioners, providers, and suppliers of services who have defrauded or abused the Medicare or Medicaid programs, and for suspending practitioners and other individuals convicted of crimes related to their participation in the delivery of medical care or services under the Medicare, Medicaid, or the social services programs. This subpart also sets forth criteria for suspending entities that have certain relationships with a person convicted of a crime related to the delivery of medical care or services under the Medicare or Medicaid programs. In addition, this subpart specifies the appeal rights and reinstatement procedures for sanctioned parties.

(b) *Definitions.*

* * * * *

"Control" means that an individual or an organization has the power, directly or indirectly, significantly to influence or direct the actions or policies of an organization.

"*Convicted*" means that (1) a judgment of conviction has been entered.

(2) there has been a finding of guilt by the trier of fact, or (3) a plea of guilty or a plea of *nolo contendere* has been accepted, by a Federal, State, or local court, regardless of whether an appeal is pending.

"Entity" includes a corporation, trust, partnership, sole proprietorship or other kind of business enterprises that is or may be eligible to receive reimbursement either directly or indirectly from the Medicare, Medicaid or Title V program.

"Exclusion" means a sanction action undertaken pursuant to section 1862(d) of the Act, 42 U.S.C. 1395y(d).

"Furnished" refers to any items or services that are reimbursable under the Medicare or Medicaid programs.

"Ownership or control interest" includes, but is not limited to:

(1) An interest of 5 percent or more in stock ownership;

(2) A 5 percent or more interest in any mortgage, deed or trust or note; or

(3) An interest in any other obligation secured by an entity that equals at least 5 percent of the value of the property or assets of the entity.

"Petitioner" means either (1) a person suspended in accordance with § 420.122, or an entity suspended as a result of its relationship with such person in accordance with § 420.122a, who requests a hearing under § 420.128; or (2) a person excluded or terminated in accordance with § 420.101 who requests a hearing under § 420.116 of this chapter.

* * * * *

"Sanction" means an exclusion, suspension or termination.

* * * * *

"Suspension" means a sanction action undertaken pursuant to section 1128(a) of the Act, 42 U.S.C. 1320a-7(a).

"Termination" means a sanction action undertaken pursuant to section 1866(b)(2)(D), (E) or (F) of the Act, 42 U.S.C. 1395cc(b)(2)(D), (E) and (F).

9. Section 410.101 would be amended by revising the section heading and paragraph (a); by revising and redesignating existing paragraphs (b) and (c) as paragraphs (c) and (d) respectively; and by adding a new paragraph (b). As revised § 420.101 reads as follows:

§ 420.101 Bases for exclusions and terminations for fraud or abuse; exceptions.

(a) Payment will not be made under Medicare for items or services furnished by a practitioner, provider, or other supplier of services, when the OIG determines that the provider or other party has;

(1) Knowingly and willfully made or caused to be made any false statement or misrepresentation of a material fact in a request for payment under Medicare or for use in determining the right to payment under Medicare.

(2) Furnished items or services that are substantially in excess of the patient's needs or of a quality that does not meet professionally recognized standards of health care; or

(3) Submitted or caused to be submitted bills or requests for payment containing charges (or costs) that are substantially in excess of its customary charges (or costs).

(b) The OIG will terminate a provider agreement when it determine that the provider has:

(1) Made or caused to be made any false statement or misrepresentation of a material fact in a request for payment under Medicare or for use in determining the right to payment under Medicare;

(2) Furnished items or services that are substantially in excess of the beneficiary's needs or of a quality that does not meet professionally recognized standards of health care; or

(3) Submitted or caused to be submitted bills or requests for payment containing charges (or costs) that are substantially in excess of its customary charges (or costs).

(c) The OIG determination under paragraph (a)(2) and (b)(2) of this section, that the items or services furnished were excessive or of unacceptable quality, will be made on the basis of reports, including sanction reports, from the following sources:

(1) The PRO for the area served by the practitioner, provider, or other supplier of services;

(2) State or local licensing or certification authorities;

(3) Peer review committees of fiscal agents or contractors;

(4) State or local professional societies; or

(5) Other sources deemed appropriated by the OIG.

(d) *Exceptions.* (1) Notwithstanding the circumstances specified in paragraph (a)(2) of this section, HCFA will not deny Medicare payments if it has made payment for non-covered care on the grounds that the beneficiary and the practitioner, provider, or other supplier of service could not reasonably be expected to know that payment would not be made for a particular item or service. (See section 1879(a) of the Act (42 U.S.C. 1395pp(a)) and § 405.330 of this chapter.

(2) HCFA will not deny Medicare payment for bills or requests that are substantially in excess of customary charges or costs, if it finds the excess charges are justified by unusual circumstances or medical complications requiring additional time, effort, or expense in localities in which it is accepted medical practice to make an extra charge in such case.

10. Section 420.105 would be amended by revising paragraph (a) to read as follows:

§ 420.105 Notice of proposed exclusion or termination for fraud or abuse.

(a) If the OIG proposes to deny reimbursement in accordance with § 420.101, or to terminate a provider agreement it will send written notice of its intent and the reasons for the proposed exclusion or termination to the practitioner, provider or other supplier of services.

* * * * *

11. Section 420.107 would be amended by revising paragraphs (a) and (b), and by removing paragraph (c). As revised § 420.107 reads as follows:

§ 420.107 Notice of exclusion or termination to affected party.

(a) If, after a party has exhausted the precedures specified in § 420.105, the OIG decides to exclude the party or

terminate the provider agreement under § 420.101, it will send a written notice of its decision to the affected party dated 15 days before the decision becomes effective.

(b) The notice will state (1) the reasons for the decisions; (2) the effective date; (3) the extent of its applicability to participation in the Medicare program; (4) the earliest date on which the OIG will accept a request for reinstatement; (5) the requirements and procedures for reinstatement; and (6) the appeal rights available to the sanctioned party, as set forth in § 420.116.

12. Section 420.109 would be revised to read as follows:

§ 420.109 Notice to others regarding exclusion or termination.

HHS will also give notice of exclusion or termination and the effective date to the public, to beneficiaries (in accordance with § 420.115(b) (1) and (2)), to State Medicaid agencies and, as appropriate, to:

(a) Any provider or supplier in which the sanctioned party is known to be serving as an employee, administrator, operator, or in which the party is serving in any other capacity and is receiving payment for providing services. The purpose of the notice is to inform the provider or supplier that Medicare payment will be denied for any services performed by the sanctioned party on or after the effective date of the sanction. However, the lack of this notice will not affect HCFA's ability to deny payment for these services;

(b) The State or local authority responsible for the licensing or certification of sanctioned party;

(c) Title V agencies, State Medicaid Fraud Control Units, and PROs;

(d) Hospitals, skilled nursing facilities, home health agencies, and health maintenance organizations (HMOs);

(e) Medical societies and other professional organizations;

(f) Contractors, health care prepayment plans, and other affected agencies and organizations; and

(g) The State and Area Agencies on Aging established under Title III of the Older Americans Act.

13. Section 420.114 would be amended by revising the section heading and paragraph (a); by redesignating and revising existing paragraph (b) as paragraph (d); by removing existing paragraph (c); and by adding new paragraphs (b), (c) and (e). As revised § 420.114 reads as follows:

§ 420.114 Duration of exclusion, or termination.

(a) The exclusion of a practitioner, provider, or other supplier of services, or the termination of a provider agreement, will continue until the party is reinstated in accordance with § 420.130 through 420.136.

(b) When a party appeals an exclusion or termination under § 420.116, the sanction will continue until the earlier of—

(1) Reversal of the sanction as a result of a final agency action or judicial review, or

(2) Reinstatement of the party under §§ 420.130 through 420.136.

(c) When it is determined under § 420.101 that an exclusion or termination is warranted, the practitioner, provider or other supplier of services will be excluded from Medicare program participation, or the provider agreement will be terminated, for a minimum of one year from the effective date set forth in the notice letter.

(d) The exclusion or termination notice will specify the earliest date on which the excluded or terminated party may seek reinstatement. In setting that date, thge OIG will consider,

(1) The number and nature of the program violations and other related offenses;

(2) The nature and extent of any adverse impact the violations have had on beneficiaries;

(3) The amount of any damages incurred by the Medicare or Medicaid programs;

(4) Whether there are any mitigating circumstances;

(5) Any other facts bearing on the nature and seriousness of the violations or related offenses; and

(6) The previous sanction record of the excluded or terminated party under the Medicare or Medicaid program.

(e) If the practitioner, provider or other supplier of services appeals an exclusion or termination under § 420.116, and the sanction action is reversed after the final agency action, the following rules apply:

(1) The party may submit claims for covered services furnished to Medicare beneficiaries during the sanction period.

(2) The Medicare contractors will pay for those services if payment is otherwise appropriate.

14. Section 420.115 would be amended by revising paragraphs (a) and (b) to read as follows:

§ 420.115 Effect of exclusion.

(a) *Denial of payments to practitioners, providers and suppliers.* Except as provided in paragraph (c) of this section, payment under Medicare will not be made, and FFP under Medicaid is unavailable, for items and services furnished on or after the effective date of exclusion specified in the exclusion notice when such services are furnished by:

(1) An excluded practitioner, provider or other supplier of services that has accepted assignment of beneficiary claims for such items and services;

(2) An excluded party who is employed by a practitioner, provider or supplier of services, and is furnishing services that would otherwise be reimbursable under Medicare or Medicaid; or

(3) A practitioner who, by any contractual agreement, has assigned all or a portion of his or her rights to Medicare or Medicaid reimbursement for such services to an excluded party.

(b) *Denial of payment to beneficiaries.* If a beneficiary submits claims for items or services furnished by an excluded practitioner, provider, or other supplier of services, or a practitioner under the circumstances set forth in paragraph (a)(3) of this section, after the effective date of the exclusion:

(1) HCFA will pay the first claim submitted by the beneficiary and immediately give notice of the exclusion.

(2) HCFA will not pay the beneficiary for items or services furnished by an excluded party more than 15 days after the date on the notice to the beneficiary.

(3) An excluded practitioner, provider or other supplier of services may be liable for civil monetary penalties under section 1128A of the Act with respect to any claim he or she presents, or causes to be presented, during the period of exclusion.

(4) The payment of claims by HCFA as specified in paragraphs (b)(1) and (2) of this section does not exempt the excluded practitioner, provider or other supplier of services from liability under section 1128A of the Act.

* * * * *

15. A new section 420.116 would be added before the center heading "Suspensions on Basis of Conviction of Program-Related Crime" to read as follows:

§ 420.116 Appeal procedures.

(a) *Appeal rights.* A party excluded or terminated under any criteria specified in § 420.101 may request a hearing before an administrative law judge (ALJ) to appeal the sanction action. The parties at the hearing will consist of the petitioner and the OIG.

(b) *Applicable procedures.* A hearing under this section will be conducted in accordance with the procedures set

forth in this section and in §§ 405.1531, 405.1534, 405.1536 through 405.1541, and 405.1544 through 405.1558 of this chapter.

(c) *Prehearing conference.* The ALJ will call a prehearing conference at any time after a request for a hearing has been received, in accordance with procedures set forth in §§ 405.1540 and 405.1541 of this chapter, but no later than 15 days before the scheduled hearing. The prehearing conference may be held either in person or by a telephone for the purpose of—

(1) Delineating the issues in controversy,

(2) Identifying the evidence and witnesses to be presented at the hearing, and

(3) Obtaining stipulations.

The ALJ will provide written notice to all parties of the date of the prehearing conference at least 10 days prior to the conference.

(d) *Scope of hearing.* A hearing requested under this section is not limited to specific items and information set forth in the notice letter to the petitioner. Additional items or information may be introduced at the hearing, as appropriate.

(e) *Investigator and medical expert as witness.* An employee of the OIG responsible for preparing or presenting the case and medical expert, if any, may at OIG's discretion be present at the counsel table throughout the hearing, in addition to giving testimony as appropriate.

(f) *Discovery.* Upon the request of a party, the ALJ will allow that party to inspect and copy all documents, unless privileged, relevant to issues in the proceeding that are in the possession or control of the other party. Depositions, interrogatories, requests for admissions and other forms of prehearing discovery are not authorized. Witness lists and hearing exhibits must be exchanged at least 15 days in advance of the hearing or at such earlier time as is set by the ALJ.

(g) *ALJ authority.* (1) The ALJ may affirm, increase or reduce the sanction period imposed by the OIG, or reverse the imposition of the sanction. Any sanction period imposed by the ALJ will be effective on the date set forth in the notice letter, as provided in § 420.107.

(2) The ALJ may impose sanctions upon the parties, as necessary to serve justice, for but not limited to, the following instances:

(i) *Failure to comply with an order.* When a party fails to comply with an order—including an order to produce or make available for inspection and copying documents with the party's control, provide names and addresses of witnesses and summaries of their testimony, or submit lists and exchange copies of exhibits—the ALJ may—

(A) Draw an inference in favor of the requesting party with regard to the information sought;

(B) Prohibit the party failing to comply with such order from introducing evidence concerning, or otherwise relying upon testimony relating to, the information sought;

(C) Permit the requesting party to introduce secondary evidence concerning the information sought;

(D) Strike any part of the pleadings or other submissions of the party failing to comply with such request;

(E) Preclude the party failing to comply with such order from introducting exhibits at the hearing if not produced in a timely fashion; and

(F) Preclude the party failing to comply with such order from calling witnesses if a witness list is not provided in a timely fashion.

(ii) *Failure to prosecute or defend.* If a party fails to prosecute or defend an appeal, the ALJ may dismiss the action with prejudice or rule for the appellant.

(iii) *Failure to make timely.* The ALJ may refuse to consider any motion or other action that is not filed in a timely fashion in compliance with this section or an order of the ALJ.

(h) *Appeals Council review; judicial review.* If either party to the hearing is dissatisfied with the hearing decision, that party may request an Appeals Council review of the decision, as specified in §§ 405.1559 and 405.1561 through 405.1595 of this chapter. A petitioner may subsequently seek judicial review of the Department's final administrative decision in accordance with section 1128(e) of the Social Security Act.

16. Section 420.122 would be amended by revising paragraph (b) and by adding a new paragraph (d) to read as follows:

§ 420.122 Bases for suspension for conviction of program-related crime and individuals affected.

* * * * *

(b) The suspension for participation in Medicare for conviction of a program-related crime, specified in paragraph (a) of this section, will apply to—

(1) Practitioners;

(2) Suppliers that are wholly owned by a convicted individual;

(3) Individuals who are—

(i) Employees of practitioners, or

(ii) Employees administrators, or operators of providers or suppliers of services; and

(4) Any other individuals who, in any capacity, are receiving payment for providing services under Medicare, Medicaid, or the social services programs.

* * * * *

(d) A suspension imposed under this section will continue until the individual is reinstated in accordance with the criteria specified in § 420.131.

17. A new section 420.122a would be added to read as follows:

§ 420.122a Suspension of certain entities.

(a) When the OIG determines that a person who has been convicted after July 18, 1984 of a criminal offense related to his or her involvement in the Medicare or Medicaid program has a direct or indirect ownership or control interest of 5 percent or more in an entity, or is an officer, director, agent or managing employee (as defined in section 1126(b) of the Act) of an entity, the OIG may—

(1) Suspend from Medicare participation any such entity otherwise eligible to participate in the program; and

(2) Require the appropriate State agency administering or supervising the administration of an approved State Medicaid plan to suspend such entity from participation under the State plan.

(b) The period of suspension imposed on an entity under this section—

(1) Will be the same as the period of suspension imposed on the convicted individual whose relationship with the entity was the basis for the entity's suspension; and

(2) Will continue until the entity is reinstated in accordance with § 420.132.

(c) The length of a suspension imposed under paragraph (a)(2) of this section will not exceed the length of suspension imposed under paragraph (a)(1) of this section, except that this provision does not affect a State's ability to suspend an entity for a longer period under its own authorities.

18. Section 420.123 would be amended by revising the section heading, by redesignating existing paragraph (b) as paragraph (c), by revising newly-redesignated paragraph (c) introductory text and (c)(5), and by adding a new paragraph (b) to read as set forth below:

§ 420.123 Notice to affected individuals and entities of suspension for conviction of a program-related crime.

* * * * *

(b) When the OIG suspends an entity under § 420.122a, the OIG gives written notice to that entity informing it that the entity is suspended from Medicare participation beginning 15 days from the date of the notice.

(c) The written notice specified in paragraphs (a) and (b) of this section will set forth:

* * * * *

(5) The fact that the State Medicaid agency is required to suspend the individual or entity from participation in the Medicaid program for the same period as the suspension set under Medicare, except that this provision will not affect a State's ability to suspend individuals or entities for a longer period of time under its own authorities.

19. Section 420.124 would be amended by revising paragraph (a) to read as follows:

§ 420.124 Notice to others regarding suspension for conviction of program-related crime.

(a) HHS will also notify the following groups of the suspension concurrently with its notification to the party or parties suspended:

(1) The State Medicaid agencies, in order that they can promptly suspend the party or parties from participation in the Medicaid program (see § 455.210 of the chapter);

(2) The public; and

(3) As appropriate—

(i) Any provider or supplier in which the suspended party is known to be serving as an employee, administrator, operator, or in which the party is serving in any other capacity and is receiving payment for providing services. The purpose of the notice is to inform the provider or supplier that Medicare payment will be denied for any services performed by the suspended party on or after the effective date of the suspension. However, the lack of this notice does not affect HCFA's ability to deny payment for these services;

(ii) The State or local authority responsible for the licensing or certification of the suspended party;

(iii) Beneficiaries (in accordance with § 420.126(b);

(iv) Title V agencies, State Medicaid Fraud Control Units, and PROs;

(v) Hospitals, skilled nursing facilities, home health agencies, and health maintenance organizations (HMOs);

(vi) Medical societies and other professional organizations;

(vii) Contractors, health care prepayment plans, and other affected agencies and organizations; and

(viii) The State and Area Agencies on Aging established under Title III of the Older Americans Act.

* * * * *

20. Section 420.125 would be revised to read as follows:

§ 420.125 Duration of suspension.

(a) *General.* Suspension of the basis of a program-related crime will continue until the suspended party is reinstated in accordance with §§ 420.130 through 420.136.

(b) *Appeal of suspension.* When a party appeals a suspension under § 420.128, the suspension will continue until the earlier of—

(1) The reversal of the suspension as a result of final agency action or the judicial review, or

(2) Reinstatement of the party under §§ 420.130 through 420.136.

(c) *Base suspension period.* When the OIG determines under § 420.122 that an individual has been convicted, the individual will be suspended from Medicare and Medicaid program participation for a period of five years from the effective date specified in § 420.123, except that the OIG may consider any aggravating or mitigating factors set forth in paragraphs (d) and (e) of this section in increasing or decreasing the base suspension period.

(d) *Aggravating factors.* The OIG may consider the existence of the following factors to be aggravating and cause for lengthening a period of suspension beyond the base period set forth in paragraph (c) of this section:

(1) A determination, unrelated to the conviction, is made by the Medicare carrier or the Medicaid State Agency that—

(i) Overpayments by the program had been made to such individual due to his or her improper billing, or

(ii) Such individual's participation in the program should be denied or restricted.

(2) The criminal acts that resulted in the conviction, or similar acts, were committed over a significant period of time, i.e., one year or more.

(3) The program violations had an adverse physical, mental or financial impact on program beneficiaries.

(4) The financial damage to the program or programs was over $5,000. The entire amount of financial loss to the programs due to criminal acts or similar acts will be considered, in addition to the amount of money involved in the conviction, regardless of whether full or partial restriction has been made to the programs.

(5) The sentence resulting from the criminal conviction, including the terms of probation, is substantial.

(6) The prior criminal record of the convicted individual.

(e) *Mitigating factors.* The OIG may consider the existence of either of the following two factors to be considered as mitigating and cause for reducing a period of suspension below the base period set forth in paragraph (c) of this section:

(1) The individual was convicted of 3 or fewer misdemeanor offenses, and the total of the estimated damages incurred due to criminal acts that resulted in the conviction(s) or similar acts is less than $1,000, regardless of whether full or partial restitution has been made.

(2) The criminal proceedings document that the individual had a mental, emotional or physical condition, prior to or contemporaneous with the commission of the offense, that reduced the individual's criminal culpability.

No other factors will be considered mitigating.

(f) *Sources of information.* With respect to the factors set forth in paragraphs (d) and (e) of this section, the OIG may rely on indictments, investigative reports, presentencing reports, prior convictions, reports from fiscal agents, and other sources of credible information that would aid in determining the existence of aggravating or mitigating circumstances.

21. Section 420.126 would be amended by revising paragraph (a); by removing paragraphs (b) and (c); and by redesignating and revising paragraph (d) as paragraph (b); and by redesignating paragraph (e) as paragraph (c) to read as follows:

§ 420.126 Effect of suspension.

(a) *Denial of payments to practitioners, providers and suppliers.* Except as provided in paragraph (e) of this section, payment under Medicare will not be made, and FFP under Medicaid is unavailable, for items and services furnished on or after the effective date of the suspension when such services are furnished by:

(1) A suspended party that accepted assignment of beneficiary claims for such items or services;

(2) A suspended party who is employed by a practitioner, provider or other supplier of services, and is furnishing services that would otherwise be reimbursable under Medicare or Medicaid; or

(3) A practitioner who, by any contractual agreement, has assigned all or a portion of his or her rights to Medicare or Medicaid reimbursement for such items or services to a suspended party.

(b) *Denial of payment to beneficiaries.* If a beneficiary submits claims for items or services furnished by a suspended party or by a practitioner under circumstances set forth in paragraph (a)(3) of this section, on or after the effective date of the suspension—

(1) HCFA will pay the first claim submitted by the beneficiary and immediately give the beneficiary notice of the suspension.

(2) HCFA will not pay the beneficiary for items or services furnished more than 15 days after the date on the notice to the beneficiary.

(3) A suspended practitioner, provider or other supplier of services may be liable for civil monetary penalties under section 1128A of the Act with respect to any claim he or she presents, or causes to be presented, during the period of suspension.

(4) The payment of claims by HCFA as specified in the paragraphs (b) (1) and (2) of this section does not exempt the suspended practitioner, provider or other supplier of services from liability under section 1128A of the Act.

* * * * *

22. Section 420.128 would be revised to read as follows:

§ 420.128 Appeal procedures

(a) *Appealable issues for suspended individuals.* An individual suspended for conviction of a program-related crime, as specified in § 420.122, may request a hearing before an Administrative Law Judge on the following issues:

(1) Whether he or she was, in fact, convicted;

(2) Whether the conviction was related to his or her participation in the delivery of medical care or services under the Medicare, Medicaid, or social services programs; and

(3) Whether the length of the suspension is reasonable.

(b) *Appealable issues for suspended entities.* An entity suspended under § 420.122a may request a hearing before an ALJ on the following issues:

(1) Whether a person who was convicted of a criminal offense after July 18, 1984—

(i) Has a direct or indirect ownership or control interest of 5 percent or more in the entity, or

(ii) Is an officer, director, agent or managing employee of the entity;

(2) Whether such person was suspended under § 420.122; and

(3) Whether the suspension period imposed on the entity is the same as that imposed on the individual.

(c) *Joinder.* An appeal by an entity suspended under § 420.122a and by an individual suspended under § 420.122 may be joined, provided that—

(1) The entity's suspension is based on its relationship with such person, and

(2) Such person has appealed his or her suspension.

Joinder applies only as to the issues specified in paragraph (b) of this section.

(d) *Parties.* Except as provided in paragraph (c) of this section, the parties at the hearing will consist of the petitioner(s) and the OIG.

(e) *Applicable procedures.* A hearing for a suspension action will be conducted in accordance with the procedures set forth in this section and in §§ 405.1531, 405.1533, 405.1534, 405.1536 through 405.1541, and 405.1544 through 405.1558 of this chapter.

(f) *Prehearing conference.* The ALJ will call a prehearing conference at any time after a request for a hearing has been received, in accordance with procedures set forth in §§ 405.1540 and 405.1541 of this chapter, but no later than 15 days before the scheduled hearing. The prehearing conference may be held either in person or by telephone for the purpose of—

(1) Delineating the issues in controversy,

(2) Identifying the evidence and witnesses to be presented at the hearing, and

(3) Obtaining stipulations.

The ALJ will provide written notice to all parties of the date of the prehearing conference at least 10 days prior to the conference.

(g) *Location of hearing.* Hearings under this section will be held in the appropriate city in which DHHS' regional office is located, except where good cause is shown for holding the hearing elsewhere.

(h) *Scope of hearings.* A hearing requested under this section is not to be limited to specific items and information set forth in the notice letter to the petitioner. Additional items and information may be introduced at the hearing, as appropriate.

(i) *Burden of proof.* The burden of proof on all issues at the hearing remains with the petitioner.

(j) *Investigator as a witness.* An employee of the OIG responsible for preparing or presenting the case or an employee of the State Medicaid Fraud Control Unit may, at OIG's discretion, be present at the conusel table throughout the hearing, in addition to giving testimony as appropriate.

(k) *Discovery.* Upon request of a party, the ALJ will allow that party to inspect and copy all documents, unless privileged, relevant to issues in the proceeding that are in the possession or control of the other party. Depositions, interrogatories, requests for admissions and other forms of prehearing discovery are not authorized. Witness lists and hearing exhibits will be exchanged at least 15 days in advance of the hearing, or at such earlier time as is set by the ALJ.

(l) *ALJ authority.* (1) The ALJ may affirm, increase or reduce the period of suspension imposed by the OIG, or reverse the imposition of the suspension. Any period of suspension imposed by the ALJ will be effective 15 days from the date set forth in the notice letter, as specified in § 420.123.

(2) The ALJ may impose sanctions upon the parties, as necessary to serve justice, for, but not limited to, the following instances:

(i) *Failure to comply with an order.* When a party fails to comply with an order—including an order to produce or make available for inspection and copying documents with the party's control, provide names and addresses of witnesses and summaries of their testimony, or submit lists and exchange copies of exhibits—the ALJ may—

(A) Draw an inference in favor of the requesting party with regard to the information sought;

(B) Prohibit the party failing to comply with such order from introducing evidence concerning, or otherwise relying upon testimony relating to, the information sought;

(C) Permit the requesting party to introduce secondary evidence concerning the information sought;

(D) Strike any part of the pleadings or other submissions of the party failing to comply with such request;

(E) Preclude the party failing to comply with such order from introducing exhibits at the hearing if not produced in a timely fashion; and

(F) Preclude the party failing to comply with such order from calling witnesses if a witness list is not provided in a timely fashion.

(ii) *Failure to prosecute or defend.* If a party fails to prosecute or defend an appeal, the ALJ may dismiss the action with prejudice or rule for the appellant.

(iii) *Failure to make timely filing.* The ALJ may refuse to consider any motion or other action that is not filed in a timely fashion in compliance with this section or an order of the ALJ.

(M) *Appeals Council review; judicial review.* If any party to the hearing is dissatisfied with the hearing decision, that party may request an Appeals Council review of the decision, as specified in §§ 405.1561 through 405.1595 of this chapter. A petitioner may subsequently seek judicial review of a final administrative decision in accordance with section 1128(e) of the Act.

23. Section 420.130 would be revised to read as follows:

Reinstatement Procedures

§ 420.130 Timing and method of request for reinstatement by parties other than entities.

(a) A practitioner, provider, or supplier of services excluded or terminated from participation for fraud and abuse under § 420.101 and a party suspended from participation for program-related crimes under § 420.122 may request reinstatement at any time after the date specified in the notice of sanction by submitting to the OIG and authorizing the OIG to obtain:

(1) Statements from private health insurers, indicating whether there have been any questionable claims submitted during the sanction period;

(2) Statements from peer review bodies, probation officers, where appropriate, or professional associates, as required by the OIG, attesting to their belief, supported by facts, that the violations that led to exclusion, termination or conviction will not be repeated; and

(3) A statement from the affected party setting forth the reasons why he or she should be reinstated.

(b)(1) Except as specified in paragraph (b)(2) of this section, when a party appeals an exclusion or termination under § 420.116, or a suspension under § 420.128, the procedures for reinstatement set forth in paragraph (a) of this section will remain in effect during the appeal process, and reinstatement may not be requested by such party earlier than the date specified in the notice.

(2) When the sanction period is reduced as a result of (i) final agency action or judicial review, or (ii) an ALJ decision that is not appealed by the OIG, the party may request reinstatement once the reduced sanction period expires.

24. Section 420.131 would be added and section 420.132 would be revised to read as set forth below:

§ 420.131 Criteria for reinstatement of parties other than entities suspended under § 420.122a.

(a) The OIG will not grant reinstatement unless it is reasonably certain that the types of violations that led to the sanction will not be repeated. In making this reinstatement determination, the OIG considers—

(1) The conduct of the party occuring prior to the date of the sanction, if not known to the OIG at the time of the sanction action;

(2) The conduct of the party after the date of the notice of the sanction;

(3) Whether the State or local licensing authority has taken adverse action against the party subsequent to the date of the sanction, when such action is not based solely on the facts underlying the conviction, exclusion, termination or suspension; and

(4) With respect to a party seeking reinstatement from an exclusion or termination under § 420.101, whether the party has been convicted in Federal, State or local court for activities related to his or her program participation.

(b) Reinstatement will not be effective until the OIG approves the request and provides notice under § 420.134(a).

(c) A determination with respect to reinstatement is not appealable or reviewable, except as provided in § 420.134(c).

§ 420.132 Criteria for reinstatement of entities suspended under § 420.122a.

(a) Unless a request for early reinstatement is made under paragraph (b) of this section and is granted by the OIG, an entity suspended under § 420.122a will be reinstated automatically upon the reinstatement of the suspended individual whose conviction led to the suspension of the entity.

(b) An entity suspended under § 420.122a may apply for reinstatement at any time prior to the date specified in the notice of suspension by submitting documentation suitable to the OIG, that shows that the party whose conviction led to the entity's suspension—

(1) Has reduced his or her ownership or control interest in the entity below 5 percent; or

(2) Is no longer an officer, director, agent or managing employee of the entity.

(c) If the OIG can verify the divestiture or termination of the owner, controlling party, officer, director, agent or managing employee from the entity suspended under § 420.122a of this chapter, the OIG will approve the request for early reinstatement of the entity and provide notice as specified in § 420.134(a).

(d) If an entity suspended under § 420.122a of this chapter demonstrates to the OIG that, due to circumstances beyond its control, a convicted party continues to maintain a 5 percent or more ownership or control interest in such entity, and that the entity is unable to obtain a divestiture, the OIG may approve a request for early reinstatement and provide notice as specified in § 420.134(a).

25. Section 420.134 would be amended by revising paragraph (a); by revising and redesignating existing paragraphs (b) and (c) as paragraphs (c) and (d) respectively; and by adding a new paragraph (b). As revised § 420.134 reads as follows:

§ 420.134 Notice of section on request for reinstatement.

(a) *Notice of approval of request.* If the OIG approves the request for reinstatement, HHS will:

(1) Give written notice to the sanctioned party specifying the date when program participation may resume; and

(2) Give notice to the public and those agencies, groups, individuals and others that were originally notified, in accordance with §§ 420.109 or 420.124, of the imposition of the sanction.

(b) *Effect on providers requesting reinstatement.* When the OIG approves a request under paragraph (a) of this section from a provider seeking reinstatement, such provider may not be reinstated until HCFA finds that the provider has fulfilled, or has made satisfactory arrangements to fulfill, all of the responsibilities of its provider agreement under the statutes and regulations.

(c) *Notice of denial of request.* (1) If the OIG does not approve the request for reinstatement, it will give written notice to the party.

(2) Within 30 days of the date on the notice, the sanctioned may submit:

(i) Documentary evidence and written argument against the continued sanction; or

(ii) A written request to present evidence or argument orally to an OIG official. (The decision to continue the sanction is not an initial determination under the provisions of Part 405, Subpart O of this chapter.)

(d) *Action following consideration of additional evidence.* After evaluating any additional evidence submitted by the sanctioned party (or at the end of the 30 day period, if none is submitted), the OIG will send written notice:

(1) Confirming the denial, and indicating that a subsequent request for reinstatement will not be accepted until 6 months after the date of confirmation; or

(2) Approving reinstatement and specifying the date when program participation may be resumed. If the OIG approves reinstatement, HHS will notify the public and, as appropriate, the agencies and institutions as specified in paragraph (a)(2) of this section.

26. Section 420.136 would be revised to read as follows:

§ 420.136 Reversed or vacated convictions of program-related crime.

(a) The OIG will void the suspension of a party whose conviction has been reversed or vacated on appeal.

(b) If a suspension is voided under paragraph (a) of this section, HCFA will make payment, either to (1) the party or (2) the beneficiary if the claim was not assigned, for services covered under Medicare that are furnished or performed during the period of suspension.

(c) The OIG will also void the suspension of any entity that was suspended under § 420.122a based on an individual's conviction that has been reversed or vacated on appeal.

(d) When the OIG voids the suspension of an individual or an entity, notice will be given to the public and to those agencies, groups, individuals and others that were originally notified, in accordance with § 420.124, of the imposition of the suspension.

PART 455—PROGRAM INTEGRITY

III. 42 CFR Part 455 would be amended as follows:

1. The authority citation for Part 455 continues to read as follows:

Authority: Secs. 1102, 1124, 1126, 1128, 1902(a)(4)(A), 1902(a)(30), 1902(a)(36), 1092(a)(39), 1903(a)(6), 1903(b)(3), 1903(i)(2), 1903(n), 1903(q), and 1909 of the Social Security Act; 42 U.S.C. 1302, 1302a-3, 1302a-5, 1302a-7, 1396a(a)(4)(A), 1396a(a)(30), 1396a(a)(39), 1396b(a)(6), 1396b(b)(3), 1396b(i)(2), 1396b(n), 1396b(q), and 1396h.

2. In subpart C, § 455.210 would be revised to read as follows:

§ 455.210 Bases for suspension for conviction of program-related crimes.

The agency must suspend from the Medicaid program any party who has been suspended from participation in Medicare under §§ 420.122 and 420.122a of this chapter for conviction of a program-related crime. The agency must also suspend any convicted party or related entity that is not eligible to participate in Medicare whenever the OIG directs such actions.

3. In section 455.211, paragraph (a) would be revised to read as follows:

§ 455.211 Duration of suspension.

(a) The suspension under Medicaid must be effective on the date established by the OIG for suspension under Medicare, and must be for the same period as the Medicare suspension. In the case of a convicted party or related entity that is not eligible to participate in Medicare, the suspension will be effective on the date and for the period established by the OIG.

* * * * *

4. In section 455.213, paragraph (a) would be revised to read as follows:

§ 455.213 Effect of suspension.

(a) *Denial of payment.* Except as specified in paragraph (b) of this section, the agency must not make any payment under the plan for services furnished directly by, or under the supervision of, a suspended party or related entity during the period of the suspension.

* * * * *

5. Section 455.214 would be revised to read as follows:

§ 455.214 Waiver of suspension of parties.

(a) *Request for waiver.* The State Medicaid Agency may request the OIG to waive suspension of a party or an entity under §§ 455.210 and 420.122a if the State agency concludes that—

(1) Because of a shortage of providers or other health care personnel in the area, Medicaid beneficiaries would be denied adequate access to medical services, or

(2) For other reasons, it is in the interest of the Medicaid agency or of Medicaid beneficiaries that the party or entity not be suspended.

(b) *Effect of request.* Pending the approval of the waiver request, the suspension remains in effect; the request does not affect implementation of the suspension. Claims submitted after the effective date suspension will not be paid by a Medicaid agency until a decision is made by the OIG.

(c) *Scope of waiver.* (1) When the OIG grants a request for waiver of suspension of an individual, a related entity that is also subject to suspension is also granted a waiver.

(2) A waiver of suspension is limited to those services provided by the individual in the State that requested the waiver. The individual's suspension will remain in effect in other States.

(d) *Expiration of waiver.*

A waiver will expire and the suspension will be reimposed in the affected State if—

(1) The suspended individual no longer provides services in the immediate area for which the waiver was granted; or

(2) The area for which the waiver was granted no longer has a shortage of similar providers or health care professionals.

PART 474—IMPOSITION OF SANCTIONS ON HEALTH CARE PRACTITIONERS AND PROVIDERS OF HEALTH CARE SERVICES

IV. 42 CFR Part 474 would be amended as follows:

1. The authority citation for Part 474 continues to read as follows:

Authority: Section 1102 of the Social Security Act, 42 U.S.C. 1302, Subpart B is also issued under sec. 150 of Pub. L. 97-248, 42 U.S.C. 1320c note. Subparts C through G are also issued under sec. 1156 of the Social Security Act, 42 U.S.C. 1320c—5.

2. In Subpart B, § 474.14 would be amended by revising paragraph (a) to read as follows:

§ 474.14 Effective dates of exclusion.

(a) *General provisions.* Except as provided in paragraph (b) of this section:

Payment will not be made under Medicare to an excluded practitioner or provider and FFP will not be available under Medicaid for services furnished by an excluded practitioner or provider on or after the effective date of exclusion. (See § 455.203 of this chapter.)

* * * * *

3. In Subpart F, § 474.54 would be amended by revising paragraph (a) to read as follows:

§ 474.54 Effect of an exclusion on Medicare payments and services.

(a) *General provisions.* Except as provided under paragraphs (b) and (c) of this section—

(1) Payment will not be made under Medicare to an excluded practitioner or other person for services or items furnished or ordered during the period of exclusion; and

(2) Payment will not be made under Medicare to any provider for services or items ordered by an excluded practitioner or other person when the order was a necessary precondition for payment under Medicare.

* * * * *

(Catalog of Federal Domestic Assistance Programs, No. 13.714, Medical Assistance Program; No. 13.773, Medicare—Hospital Insurance Program; and No. 13.744, Medicare—Supplementary Medical Insurance Program)

Dated: December 4, 1985.

R.P. Kusserow,

Inspector General, Department of Health and Human Services.

Approved: May 22, 1986.

Otis R. Bowen,

Secretary.

[FR Doc. 86-14003 Filed 7-8-86; 8:45 am]

BILLING CODE 4150-04-M

FEDERAL COMMUNICATIONS COMMISSION

47 CFR Part 18

[Gen. Docket No. 83-806]

Regulations Concerning RF Lighting Devices

AGENCY: Federal Communications Commission.

ACTION: Proposed rule; extension of comment/reply comment period.

SUMMARY: The Commission extends by thirty (30) days the deadline to file comments and reply comments on the Notice of Proposed Rule Making (Notice), released May 8, 1986, in this proceeding, 51 FR 18004, (May 16, 1986). In the Notice, the Commission proposed to adopt radiated emission limits at frequencies below 30 MHz for RF lighting devices. This action is taken in response to a request filed by the National Electrical Manufacturers Association.

DATES: Comments on the Notice are due July 30, 1986, and reply comments August 15,1986.

ADDRESS: Federal Communications Commission, Washington, DC 20554.

FOR FURTHER INFORMATION CONTACT: Liliane Volcy, Office of Engineering and Technology, tel: (202) 653-7316.

SUPPLEMENTARY INFORMATION:

Order Extending Time To File Comments and Reply Comments

In the Matter of FCC Regulations Concerning RF Lighting Devices; GEN Docket 83-806.

Adopted: June 30, 1986.

Released: July 2, 1986.

By the Chief Engineer.

1. On May 8, 1986, the Commission released a *Notice of Proposed Rule Making (Notice)*, FCC 86-205, 51 FR 18004 (May 16, 1986) in this proceeding. The *Notice* specified filing deadlines of June 30, 1986, for comments, and July 15, 1986, for reply comments.

2. Pursuant to § 1.46(b) of the Rules, the National Electrical Manufacturers Association (NEMA), on June 12, 1986, requested a 30-day extension of the deadline for filing comments and reply comments. NEMA asserts that there is insufficient time to respond properly to the issues raised in the *Notice* due to their technical complexity.

3. We recognize the concerns of NEMA and that additional time may be needed to gather relevant information in order to respond adequately to all issues. Because of the importance of this proceeding, and our desire to have the most definitive response possible, an extension of time to July 30, 1986, for comments, and to August 15, 1986, for reply comments is hereby ordered, pursuant to the authority granted under § 0.241 of the Rules.

Thomas P. Stanley,

Chief Engineer.

[FR Doc. 86-15368 Filed 7-8-86; 8:45 am]

BILLING CODE 6712-01-M

47 CFR Part 73

[MM Docket No. 86-277, RM-5276]

Radio Broadcasting Services; Dothan, AL

AGENCY: Federal Communications Commission.

ACTION: Proposed rule.

SUMMARY: This document requests comments on a petition by Reuben C. Hughes proposing the allotment of Channel 263A to Dothan, AL, as that community's fourth FM broadcast service.

DATES: Comments must be filed on or before August 25, 1986, and reply comments on or before September 9, 1986.

ADDRESS: Federal Communications Commission, Washington, DC 20554.

In addition to filing comments with the FCC, interested parties should serve the petitioner's counsel, as follows: Lawrence Roberts, Esq., Mullin, Rhyne, Emmons & Topel, 1000 Connecticut. Ave., NW, Suite 500, Washington, DC 20036.

FOR FURTHER INFORMATION CONTACT: Nancy V. Joyner (202) 634-6530.

SUPPLEMENTARY INFORMATION: This is a summary of the Commission's Notice of Proposed Rule Making, MM Docket No. 86-277, adopted June 13, 1986, and released July 2, 1986. The full text of this Commission decision is available for inspection and copying during normal business hours in the FCC Dockets Branch (Room 230), 1919 M Street, NW, Washington, DC. The complete text of this decision may also be purchased from the Commission's copy contractors, International Transcription Service, (202) 857-3800, 2100 M Street, NW, Suite 140, Washington, DC 20037.

Provisions of the Regulatory Flexibility Act of 1980 do not apply to this proceeding.

Members of the public should note that from the time a Notice of Proposed Rule Making is issued until the matter is no longer subject to Commission consideration or court review, all *ex parte* contacts are prohibited in Commission proceedings, such as this one, which involve channel allotments. See 47 CFR 1.1231 for rules governing permissible *ex parte* contact.

For information regarding proper filing procedures for comments, See 47 CFR 1.415 and 1.420.

List of Subjects in 47 CFR Part 73

Radio broadcasting.

Federal Communication Commission.

Mark N. Lipp,

Chief, Allocations Branch, Policy and Rules Division, Mass Media Bureau.

[FR Doc. 86-15369 Filed 7-8-86; 8:45 am]

BILLING CODE 6712-01-M

47 CFR Part 73

[MM Docket No. 86-271, RM-5275]

Radio Broadcasting Services; Malvern, AR

AGENCY: Federal Communications Commission.

ACTION: Proposed rule.

SUMMARY: This document requests comments on a petition by Tom Hohrine seeking the allotment of Channel 227A to Malvern, Arkansas, as that community's second FM service.

DATES: Comments must be filed on or before August 22, 1986, and reply comments on or before September 8, 1986.

ADDRESS: Federal Communications Commission, Washington, DC 20554.

In addition to filing comments with the FCC, interested parties should serve the petitioner, as follows: 831 Cherry Lane, Malvern, Arkansas 72104.

FOR FURTHER INFORMATION CONTACT: Nancy V. Joyner (202) 634-6530.

SUPPLEMENTARY INFORMATION: This is a summary of the Commission's Notice of Proposed Rule Making, MM Docket No. 86-271, adopted June 13, 1986, and released July 1, 1986. The full text of this Commission decision is available for inspection and copying during normal business hours in the FCC Dockets Branch (Room 230), 1919 M Street, NW, Washington, DC. The complete text of this decision may also be purchased from the Commission's copy contractors, International Transcription Service, (202) 857-3800, 2100 M Street, NW, Suite 140, Washington, DC 20037.

Provisions of the Regulatory Flexibility Act of 1980 do not apply to this proceeding.

Members of the public should note that from the time a Notice of Proposed Rule Making is issued until the matter is

no longer subject to Commission consideration or court review, all *ex parte* contacts are prohibited in Commission proceedings, such as this one, which involve channel allotments. See 47 CFR 1.1231 for rules governing permissible *ex parte* contact.

For information regarding proper filing procedures for comments, See 47 CFR 1.415 and 1.420.

List of Subjects in 47 CFR Part 73

Radio broadcasting.

Federal Communications Commission.

Mark N. Lipp,

Chief, Allocations Branch, Policy and Rules Division, Mass Media Bureau.

[FR Doc. 86-15372 Filed 7-8-86; 8:45 am]

BILLING CODE 6712-01-M

---

47 CFR Part 73

[MM Docket No. 86-284, RM-5273]

Radio Broadcasting Services; Vero Beach, FL

AGENCY: Federal Communications Commission.

ACTION: Proposed rule.

SUMMARY: This document requests comments on a petition by Treasure Coast Radio, Inc., licensee of Station WAVW(FM), Vero Beach, Florida, proposing to substitute Channel 279C2 for Channel 288A and to modify its Class A license to specify the new channel.

DATES: Comments must be filed on or before August 25, 1986, and reply comments on or before September 9, 1986.

ADDRESS: Federal Communications Commission, Washington, DC 20554. In addition to filing comments with the FCC, interested parties should serve the petitioners, or their counsel or consultant, as follows: John F. Garzizlia, Pepper & Corazzinni, 1776 K Street, NW., Washington, DC 20002 (counsel for petitioner).

FOR FURTHER INFORMATION CONTACT: Montrose H. Tyree (202) 634-6530.

SUPPLEMENTARY INFORMATION: This is a summary of the Commission's Notice of Proposed Rule Making, MM Docket No. 86-284 adopted June 13, 1986, and released July 3, 1986. The full text of this Commission decision is available for inspection and copying during normal business hours in the FCC Dockets Branch (Room 230), 1919 M Street, NW, Washington, DC. The complete text of this decision may also be purchased from the Commission's copy contractors, International Transcription Service, (202) 857-3800, 2100 M Street, NW, Suite 140, Washington, DC 20037.

Provisions of the Regulatory Flexibility Act of 1980 do not apply to this proceeding.

Members of the public should note that from the time a Notice of Proposed Rule Making is issued until the matter is no longer subject to Commission consideration or court review, all *ex parte* contacts are prohibited in Commission proceedings, such as this one, which involve channel allotments. See 47 CFR 1.1231 for rules governing permissible *ex parte* contact.

For information regarding proper filing procedures for comments, See 47 CFR 1.415 and 1.420.

List of Subjects in 47 CFR Part 73

Radio broadcasting.

Federal Communications Commission.

Mark N. Lipp,

Chief, Allocations Branch, Policy and Rules Division, Mass Media Bureau.

[FR Doc. 86-15373 Filed 7-8-86; 8:45 am]

BILLING CODE 6712-01-M

---

47 CFR Part 73

[MM Docket No. 86-281, RM-4960]

Radio Broadcasting Services; Osceola, IA

AGENCY: Federal Communications Commission.

ACTION: Proposed rule.

SUMMARY: This document requests comments on a petition by J.B. Broadcast Inc. proposing the substitution of Channel 295C2 for Channel 296A at Osceola, Iowa and modification of the license of Station KJJC(FM), Osceola, Iowa, to specify operation on Channel 295C2, as that community's first wide coverage area FM service.

DATES: Comments must be filed on or before August 25, 1986, and reply comments on or before September 9, 1986.

ADDRESS: Federal Communications Commission, Washington, DC 20554.

In addition to filing comments with the FCC, interested parties should serve the petitioners, or their counsel or consultant, as follows: J.B. Broadcast, Inc., c/o FM-107, R.R. #2, Box 464, Osceola, Iowa 40213 (petitioner).

FOR FURTHER INFORMATION CONTACT: D. David Weston (202) 634-6530.

SUPPLEMENTARY INFORMATION: This is a summary of the Commission's Notice of Proposed Rule Making, MM Docket No. 86-281, adopted June 13, 1986, and released July 2, 1986. The full text of this Commission decision is available for inspection and copying during normal business hours in the FCC Dockets Branch (Room 230), 1919 M Street, NW, Washington, DC. The complete text of this decision may also be purchased from the Commission's copy contractors, International Transcription Service, (202) 857-3800, 2100 M Street, NW, Suite 140, Washington, DC 20037.

Provisions of the Regulatory Flexibility Act of 1980 do not apply to this proceeding.

Members of the public should note that from the time a Notice of Proposed Rule Making is issued until the matter is no longer subject to Commission consideration or court review, all *ex parte* contracts are prohibited in Commission proceedings, such as this one, which involve channel allotments. See 47 CFR 1.1231 for rules governing permissible *ex parte* contact.

For information regarding proper filing procedures for comments, See 47 CFR 1.415 and 1.420.

List of Subjects in 47 CFR Part 73

Radio broadcasting.

Federal Communications Commission.

Mark N. Lipp,

Chief, Allocations Branch, Policy and Rules Division, Mass Media Bureau.

[FR Doc. 86-15374 Filed 7-8-86; 8:45 am]

BILLING CODE 6712-01-M

---

47 CFR Part 73

[MM Docket No. 86-280, RM-5201]

Radio Broadcasting Service; Brusly, LA

AGENCY: Federal Communications Commission.

ACTION: Proposed rule.

SUMMARY: This document requests comments on a petition filed by Rick Pevey proposing to allot FM Channel 295A to Brusly, Louisiana as that community's first FM channel.

DATES: Comments must be filed on or before August 25, 1986, and reply comments on or before September 9, 1986.

ADDRESS: Federal Communications Commission, Washington, D.C. 20554. In addition to filing comments with the FCC, interested parties should serve the petitioners, or their counsel or consultant, as follows: Mr. Rick Pevey, 7914 Director Drive Baton Rouge, Louisiana 70816.

FOR FURTHER INFORMATION CONTACT: D. David Weston (202) 634-6530.

SUPPLEMENTARY INFORMATION: This is a summary of the Commission's Notice of Proposed Rule Making, MM Docket No. 86-280 adopted June 13, 1986, and released July 2, 1986. The full text of this Commission decision is available for inspection and copying during normal business hours in the FCC Dockets Branch (Room 230), 1919 M Street, NW, Washington, DC. The complete text of this decision may also be purchased from the Commission's copy contractors, International Transcription Service, (202) 857-3800, 2100 M Street, NW, Suite 140, Washington, DC 20037.

Provisions of the Regulatory Flexibility Act of 1980 do not apply to this proceeding.

Members of the public should note that from the time a Notice of Proposed Rule Making is issued until the matter is no longer subject to Commission consideration or court review, all *ex parte* contacts are prohibited in Commission proceedings, such as this one, which involve channel allotments. See 47 CFR 1.1231 for rules governing permissible *ex parte* contact.

For information regarding proper filing procedures for comments, See 47 CFR 1.415 and 1.420.

List of Subjects in 47 CFR Part 73

Radio broadcasting.

Federal Communications Commission.

Mark N. Lipp,

Chief, Allocations Branch, Policy and Rules Division, Mass Media Bureau.

[FR Doc. 86-15375 Filed 7-8-86; 8:45 am]

BILLING CODE 6712-01-M

---

47 CFR Part 73

[MM Docket No. 86-278 RM-5098]

Radio Broadcasting Services; Lebanon, MO

AGENCY: Federal Communications Commission.

ACTION: Proposed rule.

SUMMARY: This document requests comments on a petition filed by Lebanon Broadcasting Company, Inc., proposing the substitution of FM Channel 300C2 for 221A at Lebanon, Missouri, and modification of the license of Station KLWT (FM), Lebanon, Missouri, to specify operation on Channel 300C2. The allocation could provide Lebanon with a first class C2 channel.

DATES: Comments must be filed on or before August 22, 1986, and reply comments on or before September 8, 1986.

ADDRESS: Federal Communications Commission, Washington, DC 20554.

In addition to filing comments with the FCC, interested parties should serve the petitioners, or their counsel or consultant, as follows: Stanley G. Emert, Jr., Watson & Emert, Plaza Tower-Suite 2108, Knoxville, Tennessee 37929 (counsel for the petitioner).

FOR FURTHER INFORMATION CONTACT: Kathleen Scheuerle (202) 634-6530.

SUPPLEMENTARY INFORMATION: This is a summary of the Commission's Notice of Proposed Rule Making, MM Docket No. 86-278, adopted June 13, 1986, and released July 1, 1986. The full text of this Commission decision is available for inspection and copying during normal business hours in the FCC Docket Branch (Room 230), 1919 M Street, NW., Washington, DC. The complete text of this decision may also be purchased from the Commission's copy contractors, International Transcription Service, (202) 857-3800, 2100 M Street, NW, Suite 140, Washington, DC 20037.

Provisions of the Regulatory Flexibility Act of 1980 do not apply to this proceeding.

Members of the public should note that from the time of a Notice of Proposed Rule Making is issued until the matter is no longer subject to Commission consideration or court review, all *ex parte* contacts are prohibited in Commission proceedings, such as this one, which involve channel allotments. See 47 CFR. 1.1231 for rules governing permissible *ex parte* contact.

For information regarding proper filing procedures for comments, See 47 CFR 1.415 and 1.420.

List of Subjects in 47 CFR Part 73

Radio broadcasting.

Federal Communications Commission.

Mark N. Lipp,

Chief, Allocations Branch, Policy and Rules Division, Mass Media Bureau.

[FR Doc. 86-15376 Filed 7-8-86; 8:45 am]

BILLING CODE 6712-01-M

---

47 CFR Part 73

[MM Docket No. 86-283, RM-5222]

Radio Broadcasting Services; Potosi, MO

AGENCY: Federal Communications Commission.

ACTION: Proposed Rule.

SUMMARY: This document requests comments on a petition filed by EZ Communications, Inc. ("EZ"), requesting the substitution of FM Channel 267A for 249A at Potosi, Missouri. EZ is the licensee of Station KYKY, Channel 251, St. Louis, Missouri. The substitution at Potosi would allow Station KYKY to relocate its transmitter in order to avoid several tall buildings at its current location. A site restriction 12.7 kilometers southwest of Potosi is necessary for the allotment of Channel 267A. In filing comments, petitioner should make a showing that city grade coverage can be provided at Potosi at the restricted site which is close to the predicted 70 dBu limit for Class A channels.

DATES: Comments must be filed on or before August 25, 1986, and reply comments on or before September 9, 1986.

ADDRESS: Federal Communications Commission, Washington, DC 20554.

In addition to filing comments with the FCC, interested parties should serve the petitioners, or their counsel or consultant, as follows: Rainer K. Kraus, Koteen & Naftalin, 1150 Connecticut Avenue, NW., Washington, DC 20036 (counsel for petitioner).

FOR FURTHER INFORMATION CONTACT: Kathleen Scheuerle (202) 634-6530.

SUPPLEMENTARY INFORMATION: This is a summary of the Commission's Notice of Proposed Rule Making, MM Docket No. 86-383 adopted June 18, 1986, and released July 3, 1986. The full text of this Commission decision is available for inspection and copying during normal business hours in the FCC Dockets Branch (Room 230), 1919 M Street, NW., Washington, DC. The complete text of this decision may also be purchased from the Commission's copy contractors, International Transcription Service, (202) 857-3800, 2100 M Street, NW, Suite 140, Washington, DC 20037.

Provisions of the Regulatory Flexibility Act of 1980 do not apply to this proceeding.

Members of the public should note that from the time a Notice of Proposed Rule Making is issued until the matter is no longer subject to Commission consideration or court review, all *ex parte* contacts are prohibited in Commission proceedings, such as this one, which involve channel allotments. See 47 CFR 1.1231 for rules governing permissible *ex parte* contact.

For information regarding proper filing procedures for comments, See 47 CFR 1.415 and 1.420.

List of Subjects in 47 CFR Part 73

Radio broadcasting.

Federal Communications Commission.

Mark N. Lipp,

Chief, Allocations Branch, Policy and Rules Division, Mass Media Bureau.

[FR Doc. 86-15377 Filed 7-8-86; 8:45 am]

BILLING CODE 6712-01-M

47 CFR Part 73

[MM Docket No. 86-265, RM-5305]

Radio Broadcasting Services; Harrison, OH

AGENCY: Federal Communications Commission.

ACTION: Proposed rule.

SUMMARY: This document request comments on a petition by Vernon Baldwin to allocate Channel 282A to Harrison, Ohio, as the community's first local FM service. Petitioner seeks a waiver of that portion of the buffer zone of Station WPAY-FM, Channel 281, Portsmouth, Ohio, which lies within Zone I.

DATES: Comments must be filed on or before August 25, 1986, and reply comments on or before September 9, 1986.

ADDRESS: Federal Communications Commission, Washington, DC 20554.

In addition to filing comments with the FCC, interested parties should serve the petitioners, or their counsel or consultant, as follows: Lauren A. Colby, Esq., 10 E. Fourth Street, P.O. Box 113, Fredrick, Maryland 21701 (Counsel to petitioner).

FOR FURTHER INFORMATION CONTACT: Leslie K. Shapiro, Mass Media Bureau, (202) 634-6530.

SUPPLEMENTARY INFORMATION: This is a summary of the Commission's Notice of Proposed Rule Making, MM Docket No. 86-265, adopted June 13, 1986, and released July 3, 1986. The full text of this Commission decision is available for inspection and copying during normal business hours in the FCC Dockets Branch (Room 230), 1919 M Street, NW, Washington, DC. The complete text of this decision may also be purchased from the Commission's copy contractors, International Transcription Service, (202) 857-3800, 2100 M Street, NW, Suite 140, Washington, DC 20037.

Provisions of the Regulatory Flexibility Act of 1980 do not apply to this proceeding.

Members of the public should note that from the time a Notice of Proposed Rule Making is issued until the matter is no longer subject to Commission consideration or court review, all *ex parte* contracts are prohibited in Commission proceedings, such as this one, which involve channel allotments. See 47 CFR 1.1231 for rules governing permissible *ex parte* contact.

For information regarding proper filing procedures for comments, See 47 CFR 1.415 and 1.420.

List of Subjects in 47 CFR Part 73

Radio broadcasting.

Federal Communications Commission.

Mark N. Lipp,

Chief, Allocations Branch, Policy and Rules Division, Mass Media Bureau.

[FR Doc. 86-15379 Filed 7-8-86; 8:45 am]

BILLING CODE 6712-01-M

47 CFR Part 73

[MM Docket No. 86-272, RM-5312]

Radio Broadcasting Services; Winner, SD

AGENCY: Federal Communications Commission.

ACTION: Proposed rule.

SUMMARY: Action taken herein proposes the allocation of Channel 253C1 to Winner, South Dakota, as the community's second local FM service, at the request of Tripp County Christian Radio, Inc.

DATES: Comments must be filed on or before August 22, 1986, and reply comments on or before September 8, 1986.

ADDRESS: Federal Communications Commission, Washington, DC 20554.

In addition to filing comments with the FCC, interested parties should serve the petitioner, or their counsel or consultant, as follows:

Milo Koskan, President, Ripp County Christian Radio, Inc., P.O. Box 310, Winner, South Dakota 57580 (petitioner).

Richard F. Rahn, Grieves & Rahn, 337 Main Street, Winner, South Dakota 57580 (counsel for petitioner).

FOR FURTHER INFORMATION CONTACT: Leslie K. Shapiro, Mass Media Bureau (202) 634-6530.

SUPPLEMENTARY INFORMATION: This is a summary of the Commission's Notice of Proposed Rule Making, MM Docket No. 86-272, adopted June 13, 1986, and released July 1, 1986. The full text of this Commission decision is available for inspection and copying during normal business hours in the FCC Dockets Branch (Room 230), 1919 M Street, NW, Washington, DC. The complete text of this decision may also be purchased from the Commission's copy contractors, International Transcription Service, (202) 857-3800, 2100 M Street, NW, Suite 140, Washington, DC 20037.

Provisions of the Regulatory Flexibility Act of 1980 do not apply to this proceeding.

Members of the public should note that from the time a Notice of Proposed Rule Making is issued until the matter is no longer subject to Commission consideration or court review, all *ex parte* contacts are prohibited in Commission proceedings, such as this one, which involve channel allotments. See 47 CFR 1.1231 for rules governing permissible *ex parte* contact.

For information regarding proper filing procedure for comments, See 47 CFR 1.415 and 1.420.

List of Subjects in 47 CFR Part 73

Radio broadcasting.

Federal Communications Commission.

Mark N. Lipp,

Chief, Allocations Branch, Policy and Rules Division, Mass Media Bureau.

[FR Doc. 86-15381 Filed 7-8-86; 8:45 am]

BILLING CODE 6712-01-M

47 CFR Part 73

[MM Docket No. 86-274, RM-5246]

Radio Broadcasting Services; Southport, NC

AGENCY: Federal Communications Commission.

ACTION: Proposed rule.

SUMMARY: Action taken herein proposes the substitution of FM Channel 298C2 for Channel 296A at Southport, North Carolina, and the modification of the license of Station WJYW to specify operation on the higher powered channel, at the request of Rawley Communications Corporation.

DATES: Comments must be filed on or before August 22, 1986.

ADDRESS: Federal Communications Commission, Washington, DC 20554.

In addition to filing comments with the FCC, interested parties should serve the petitioners, or their counsel or consultant, as follows: Mark J. Prak, Tharrington, Smith & Hargrove, P.O. Box 1150, 209 Fayetteville Street Mall, Raleigh, North Carolina 27601 (counsel to petitioner).

FOR FURTHER INFORMATION CONTACT: Leslie K. Shapiro, Mass Media Bureau, (202) 634-6530.

SUPPLEMENTARY INFORMATION: This is a summary of the Commission's Notice of Proposed Rule Making, MM Docket No. 86-274, adopted June 13, 1986, and released July 1, 1986. The full text of this Commission decision is available for inspection and copying during normal

business hours in the FCC Dockets Branch (Room 230), 1919 M Street, NW, Washington, DC. The complete text of this decision may also be purchased from the Commission's copy contractors, International Transcription Service, (202) 857-3800, 2100 M Street, NW, Suite 140, Washington, DC 20037.

Provisions of the Regulatory Flexibility Act of 1980 do not apply to this proceeding.

Members of the public should note that from the time a Notice of Proposed Rule Making is issued until the matter is no longer subject to Commission consideration or court review, all *ex parte* contacts are prohibited in Commission proceedings, such as this one, which involve channel allotments. See 47 CFR 1.1231 for rules governing permissible *ex parte* contact.

For information regarding proper filing procedures for comments, See 47 CFR 1.415 and 1.420.

List of Subjects in 47 CFR Part 73

Radio broadcasting.

Federal Communications Commission.

Mark N. Lipp,

Chief, Allocations Branch, Policy and Rules Division, Mass Media Bureau.

[FR Doc. 86-15378 Filed 7-8-86; 8:45 am]

BILLING CODE 6712-01-M

---

47 CFR Part 73

[MM Docket No. 86-275, RM-5292]

Radio Broadcasting Services; Alva, OK

AGENCY: Federal Communications Commission.

ACTION: Proposed rule.

SUMMARY: Action taken herein proposes the substitution of Channel 289C1 for Channel 232A at Alva, Oklahoma, and the modification of the construction permit to specify operation on the higher powered channel, at the request of the permittee, Women, Handicapped Americans and Minorities for Better Broadcasting.

DATES: Comments must be filed on or before August 25, 1986, and reply comments on or before September 9, 1986.

ADDRESS: Federal Communications Commission, Washington, DC 20554.

In addition to filing comments with the FCC, interested parties should serve the petitioner, or their counsel or consultant, as follows: Brian Dodge, Harvest Broadcasting Services, Box 105 FM, Hinsdale, New Hampshire 03451 (Consultant to petitioner).

FOR FURTHER INFORMATION CONTACT: Leslie K. Shapiro, Mass Media Bureau (202) 634-6530.

SUPPLEMENTARY INFORMATION: This is a summary of the Commission's Notice of Proposed Rule Making, MM Docket No. 86-275, adopted June 13, 1986, and released July 3, 1986. The full text of this Commission decision is available for inspection and copying during normal business hours in the FCC Dockets Branch (Room 230), 1919 M Street NW, Washington, DC. The complete text of this decision may also be purchased from the Commission's copy contractors, International Transcription Service, (202) 857-3800, 2100 M Street NW, Suite 140, Washington, DC 20037.

Provisions of the Regulatory Flexibility Act of 1980 do not apply to this proceeding.

Members of the public should note that from the time a Notice of Proposed Rule Making is issued until the matter is no longer subject to Commission consideration or court review, all *ex parte* contacts are prohibited in Commission proceedings, such as this one, which involve channel allotments. See 47 CFR 1.1231 for rules governing permissible *ex parte* contact.

For information regarding proper filing procedures for comments, See 47 CFR 1.415 and 1.420.

List of Subjects in 47 CFR Part 73

Radio broadcasting.

Federal Communications Commission.

Mark N. Lipp,

Chief, Allocations Branch, Policy and Rules Division, Mass Media Bureau.

[FR Doc. 86-15380 Filed 7-8-86; 8:45 am]

BILLING CODE 6712-01-M

---

47 CFR Part 73

[MM Docket No. 86-276, RM-5326]

Television Broadcasting Services; Palestine, TX

AGENCY: Federal Communications Commission.

ACTION: Proposed rule.

SUMMARY: This document requests comments on a petition by Jeffery L. Ward, proposing the assignment of UHF Television Channel 43 to Palestine, Texas, as that community's first commercial television service. A site restriction of 12.4 miles north of the community is required.

DATES: Comments must be filed on or before August 25, 1986, and reply comments on or before September 9, 1986.

ADDRESS: Federal Communications Commission, Washington, DC 20554.

In addition to filing comments with the FCC, interested parties should serve the petitioners, or their counsel or consultant, as follows: George E. Gunter, Communications Consultant, 650 North Bolton Street, Jacksonville, TX 75766 (consultant to petitioner).

FOR FURTHER INFORMATION CONTACT: Patricia Rawlings (202) 634-6530.

SUPPLEMENTARY INFORMATION: This is a summary of the Commission's Notice of Proposed Rule Making, MM Docket No. 86-276, adopted June 13, 1986, and released July 2, 1986. The full text of this Commission decision is available for inspection and copying during normal business hours in the FCC Dockets Branch (Room 230), 1919 M Street, NW, Washington, DC. The complete text of this decision may also be purchased from the Commission's copy contractors, International Transcription Service, (202) 857-3800, 2100 M Street, NW, Suite 140, Washington, DC 20037.

Provisions of the Regulatory Flexibility Act of 1980 do not apply to this proceeding.

Members of the public should note that from the time a Notice of Proposed Rule Making is issued until the matter is no longer subject to Commission consideration or court review, all *ex parte* contacts are prohibited in Commission proceedings, such as this one, which involve channel allotments. See 47 CFR 1.1231 for rules governing permissible *ex parte* contact.

For information regarding proper filing procedures for comments, See 47 CFR 1.415 and 1.420.

List of Subjects in 47 CFR Part 73

Television broadcasting.

Federal Communications Commission.

Mark N. Lipp,

Chief, Allocations Branch, Policy and Rules Division, Mass Media Bureau.

[FR Doc. 86-15367 Filed 7-8-86; 8:45 am]

BILLING CODE 6712-01-M

---

47 CFR Part 73

[MM Docket No. 86-282, RM-5148]

Television Broadcasting Services; Santa Maria, CA

AGENCY: Federal Communications Commission.

ACTION: Proposed rule.

SUMMARY: This document requests comments on a petition by Pappas Telecasting Incorporated proposing the assignment of UHF television Channel 36 to Santa Maria, California, as that community's second commercial service.

DATES: Comments must be filed on or before August 25, 1986, and reply comments on or before September 9, 1986.

ADDRESS: Federal Communications Commission, Washington, DC 20554.

In addition to filing comments with the FCC, interested parties should serve the petitioners, or their counsel or consultant, as follows: Richard Hildreth, Esquire, Frank R. Jazzo, Esquire, Fletcher, Heald & Hildreth, 1225 Connecticut Avenue, NW., Suite 400, Washington, DC 20036 (counsel for Petitioner).

FOR FURTHER INFORMATION CONTACT: Nancy V. Joyner (202) 634-6530.

SUPPLEMENTARY INFORMATION: This is a summary of the Commission's Notice of Proposed Rule Making, MM Docket No. 86-282, adopted June 13, 1986, and released July 3, 1986. The full text of this Commission decision is available for inspection and copying during normal business hours in the FCC Dockets Branch (Room 230), 1919 M Street, NW, Washington, DC. The complete text of this decision may also be purchased from the Commission's copy contractors, International Transcription Service, (202) 857-3800, 2100 M Street, NW, Suite 140, Washington, DC 20037.

Provisions of the Regulatory Flexibility Act of 1980 do not apply to this proceeding.

Members of the public should note that from the time a Notice of Proposed Rule Making is issued until the matter is no longer subject to Commission consideration or court review, all *ex parte* contacts are prohibited in Commission proceedings, such as this one, which involve channel allotments. See 47 CFR 1.1231 for rules governing permissible *ex parte* contact.

For information regarding proper filing procedures for comments, See 47 CFR 1.415 and 1.420.

List of Subjects in 47 CFR Part 73

Television broadcasting.

Federal Communications Commission.

Mark N. Lipp,

Chief, Allocations Branch, Policy and Rules Division, Mass Media Bureau.

[FR Doc. 86-15366 Filed 7-8-86; 8:45 am]

BILLING CODE 6712-01-M

47 CFR Part 73

[MM Docket No. 86-273, RM-5254]

Television Broadcasting Services: Panama City Beach, FL

AGENCY: Federal Communications Commission.

ACTION: Proposed rule.

SUMMARY: This document requests comments on a petition to allot UHF television Channel 46 to Panama City Beach, Florida, at the request of G. Weaver Corporation. The petition as filed requested Channel 17, which is in the area reserved for Offshore Radio Telephone Service. As an alternative, we have substituted Channel 46 with a site restriction.

DATES: Comments must be filed on or before August 22, 1986, and reply comments on or before September 8, 1986.

ADDRESS: Federal Communications Commission, Washnigton, DC 20554.

In addition to filing comments with the FCC, interested parties should serve the petitioners, or their counsel or consultant, as follows: Donald E. Martin, P.C., 2000 L Street NW., Suite 200, Washington, DC 20036 (Attorney for petitioner).

FOR FURTHER INFORMATION CONTACT: Montrose H. Tyree, (202) 634-6530.

This is a summary of the Commission's Proposed Rule Making, MM Docket No. 86-273, adopted June 13, 1986, and released July 1, 1986. The full text of this Commission decision is available for inspection and copying during normal business hours in the FCC Dockets Branch (Room 230), 1919 M Street NW., Washington, DC. The complete text of this decision may also be purchased from the Commission's copy contractors, International Transcription Service, (202) 857-3800, 2100 M Street NW., Suite 140, Washington, DC 20037.

Provisions of the Regulatory Flexibility Act of 1980 do not apply to this proceeding.

Members of the pblic should note that from the time a Notice of Proposed Rule Making is issued until the matter is no longer subject to Commission consideration or court review, all *ex parte* contacts are prohibited in Commission proceedings, such as this one, which involve channel allotments. See 47 CFR 1.1231 for rules governing permissible *ex parte* contact.

For information regarding proper filing procedures for comments, See 47 CFR 1.415 and 1.420.

List of Subjects in 47 CFR Part 73

Television broadcasting.

Federal Communications Commission.

Mark N. Lipp,

Chief, Allocations Branch, Policy and Rules Division, Mass Media Bureau.

[FR Doc. 86-15383 Filed 7-8-86; 8:45 am]

BILLING CODE 6712-01-M

DEPARTMENT OF TRANSPORTATION

National Highway Traffic Safety Administration

49 CFR Part 571

[Docket No. 86-05; Notice 01]

Federal Motor Vehicle Safety Standards; Air Brake Systems

AGENCY: National Highway Traffic Safety Administration (NHTSA), Department of Transportation.

ACTION: Grant of petition for rulemaking; notice of proposed rulemaking.

SUMMARY: This notice grants a petition for rulemaking from the Blue Bird Body Company, Inc. (Blue Bird), and proposes an amendment to Federal Motor Vehicle Safety Standard No. 121, *Air Brake Systems*, to suspend the stopping distance requirements of S5.3.1 of the standard for non-school buses. Currently, S5.3.1 applies only to those buses. The agency is taking this action because it tentatively agrees with the petitioner's argument that the standard should be applied equally at this time to manufacturers of school buses and manufacturers of non-school buses, and because the agency tentatively concludes that the application of those requirements should be temporarily suspended until such time the agency commences reinstituting stopping distance requirements for all heavy vehicles.

DATES: Comment closing date: August 8, 1986. The agency is providing for a 30 day comment period because expeditious action is necessary given the decreasing availability of antilock systems for buses. If adopted, the proposed amendment would become effective upon publication of the final rule in the **Federal Register**.

ADDRESS: Comments should refer to the docket number and notice number and be submitted to: Docket section, National Highway Traffic Safety Administration, Room 5109, 400 Seventh Street, SW., Washington, DC 20590. Docket hours: 8 a.m. to 4 p.m., Monday through Friday.

FOR FURTHER INFORMATION CONTACT: Mr. James Clements, Crash Avoidance Division, Office of Vehicles Safety Standards, National Highway Traffic Safety Administration, 400 Seventh Street, SW., Washington, DC 20590. Telephone: 202–426–1714.

SUPPLEMENTARY INFORMATION: Federal Motor Vehicle Safety Standard (FMVSS) No. 121, *Air Brake Systems,* specifies minimum performance requirements for air-braked trucks, buses, and trailers. The standard has been in effect for trailers since January 1, 1975, and for trucks and buses since March 1, 1975. Requirements are established for the service, emergency, and parking brake systems of these vehicles. Major requirements of the standard are that vehicles stop in specified distances and that the wheels not lock uncontrollably at speeds above 10 miles per hour during those stops. The "no lockup" requirement ensures that skidding due to wheel lockup and loss of lateral stability is minimized.

A prerequisite to the maintenance of stability and directional control of any automotive vehicle is that its tires continue rolling. A sliding tire can generate very little lateral force to control its direction of motion. Paragraph S5.3.1 of FMVSS No. 121 specifies stopping in limited distances from 20 to 60 miles per hour (mph), in the loaded and unloaded conditions on wet and dry surfaces, with the vehicle remaining in a 12-foot wide lane and with limits on wheel lockup.

The Blue Bird Body Company (Blue Bird), a manufacturer of buses and school buses, petitioned NHTSA to amend paragraphs S5.3.1, S5.3.1.1, and S5.7.1 of FMVSS No. 121, to exclude buses other than school buses ("non-school buses") from the stopping distance requirements of those sections. Blue Bird requested this change because the requirements for stopping distance without controlled wheel lockup do not apply to school buses but do apply to non-school buses. In Blue Bird's view, this situation is unreasonable and overly burdensome to manufacturers of non-school buses. Blue Bird also questioned the practicability of the requirements, noting that it was losing its existing domestic supplier of antilock systems and might have to use a foreign manufacturer.

According to the petitioner, it needs an antilock system to enable its short wheelbase, forward-engine buses to meet the requirement for 20 mph unloaded stops on surfaces with a skid number of 81. Antilock systems are installed to automatically modulate brake application pressures to avoid skidding in cases where the brake application is so strong, or the road surface so slippery that wheel lockup would normally occur. Blue Bird's buses are able to meet the stopping distance requirements of the standard without the use of an antilock system under all other test conditions, because the driver of the vehicle is able to control wheel lockup by modulating the brakes. However, during the 20 mph unloaded test on a surface with a skid number of 81, the rear brakes on Blue Bird's buses lock. Blue Bird states that, although the rear wheels skid, the bus stops smoothly *within* the 35-feet stopping distance required by the standard, and no part of the bus leaves the roadway.

Background

Following implementation of Standard No. 121's requirements for trucks and buses in March 1975, the agency found a pattern of erratic behavior in the performance of the antilock system used by manufacturers of transit and intercity buses to meet the "no lockup" requirements of the standard (S5.3.1). In 1976, NHTSA suspended the service brake stopping distance requirement (including the "no lockup" requirement) for all buses to provide a period in which modified antilock hardware and newly-introduced systems could be field-evaluated. 41 FR 1598 (January 9, 1976). The requirements for transit and intercity buses were suspended until January 1, 1978. The suspension of the requirements for school buses was scheduled to end April 1, 1978.

In March 1978, after the service brake stopping distance requirements for transit and intercity buses were allowed to back into effect, the agency determined that the school bus service brake stopping distance requirements of the standard should remain suspended. 43 FR 12015 (March 23, 1978). The agency made this decision in order to maintain the status quo, since the Department had initiated a series of actions that were intended to resolve major issues with regard to the reliability, effectiveness and costs of the antilock system generally used at that time to meet the standard. Given that NHTSA was in the process of evaluating Standard No. 121, the agency had concluded that it would be inappropriate to change the status quo as it affected manufacturers of vehicles not then subject to the stopping distance and "no lockup" requirements of S5.3.1. NHTSA thereby postponed the reimplementation of the service brake stopping distance requirements of FMVSS No. 121 as they applied to air-brake school buses. The suspension of those requirements for school buses remains in effect today.

In April 1978, the Ninth Circuit U.S. Court of Appeals invalidated portions of Standard No. 121 that apply to trucks and trailers, including the "no lockup" requirements of S5.3.1 and S5.3.2. *PACCAR, Inc.* v. *Natonal Highway Traffic Safety Administration,* 573 F.2d 632 (9th Cir. 1978), *cert. denied,* 439 U.S. 862 (1978). NHTSA did not believe that any requirements of Standard No. 121 were invalidated for buses, because of a statement made in a footnote of the opinion that "[t]he part of the standard that regulates air-braked buses is not at issue here." The agency determined that this explicit statement by the court that it had not considered the merits of the buse requirements was intended to emphasize the limitation of its decision to trucks and trailers. Since the court did not consder those requirements, the fact that the court's decision left them undisturbed did not suggest any ratification of them. Thus, *PACCAR* did not increase the burden which the agency must meet in justifying a revision of the bus requirements.

The Petition

Blue Bird believes that if heavy trucks, truck-trailer combinations and school buses can be excluded from Standard No. 121's "no lockup" requirements, then non-school buses should likewise be excluded. The petitioner argues that the school buses and non-school buses it produces are essentially the same, except for differences in components or designs installed to meet Federal or State school bus standards (such as color, seating systems, lighting equipment, body panel joint strength, and fuel systems). In its petition, Blue Bird pointed out that, in general, school buses have been required to have safety features beyond those required on other motor vehicles. The petitioner believed that there was no logic to require non-school buses to meet the stopping distance requirements of Standard No. 121 if school buses—and virtually identical vehicles—are excluded from those requirements. If school buses were excluded from the requirements of the standard because thee was no safety need to address, the petitioner argued it would follow that non-school buses should also be excluded from those requirements for the same reason. Blue Bird believes there are no valid reasons for different brake standards for nearly identical vehicles, and requests NHTSA to eliminate this apparent anomaly.

NHTSA's Proposal

The agency recognizes that an unusual situation exists for the applicability of the stopping distance requirements of Standard No. 121. The court's decision in *PACCAR* and the suspension of the school buse service brake stopping distance requirements of the standard have created an historical anomaly in that the service brake stopping distance performance requirements (including the "no lockup" requirements of S5.3.1) have been suspended for or otherwise made inapplicable to trucks, trailers, and school buses, but remain in effect for non-school buses. NHTSA has decided to partially grant Blue Bird's petition, and proposes to include non-school buses in the group of vehicles for which the requirements of S5.3.1 are currently suspended.

Under the National Traffic and Motor Vehicle Safety Act of 1966 (15 U.S.C. 1381 *et. seq.)*, NHTSA is authorized to issue safety standards that protect the public against unreasonable risk of accidents occurring as a result of the design, construction, or performance of motor vehicles. The Act requires that each standard must, as issued, be practicable, meet the need for motor vehicle safety, and be stated in objective terms. The Act also directs NHTSA to consider whether a standard would contribute to carrying out the purposes of the Act and would be reasonable, practicable, and appropriate for a particular type of motor vehicle.

Blue Bird raises the issue of the appropriateness of the requirements in S5.3.1 and S5.3.1.1 for non-school buses. The stopping distance requirements (including the "no lockup" requirements) do not apply to school buses, due to their suspension in 1978. The agency is concerned about the anomalous application of the requirements, where buses other than school buses are subject to more stringent requirements than school buses. Notwithstanding Standard No. 121's stopping distance requirements, NHTSA has always required highest levels of safety for school buses. The agency's comprehensive motor vehicle safety standards for school buses require more safety features than those provided for other motor vehicles. The school bus safety standards include specifications for emergency exits, seating systems, rollover protection, fuel systems, lighting, and body joint strength. However, Blue Bird presents the agency with the incongruous situation of non-school buses being subject to requirements from which school buses are currently excluded.

NHTSA has tentatively determined that the stopping distance requirements of S5.3.1 should not be applied exclusively to buses other than school buses. The agency believes that non-school buses are not so peculiar or unique so as to justify the distinction between them and other vehicles for which the requirements have been suspended. The petitioner, a manufacturer of both school buses and non-school buses, points out that its short wheelbase, forward-engine bus would not be subject to S5.3.1 if it were sold to carry school children, but must be certified as meeting those rquirements if it were sold for other purposes. An application of S5.3.1 to school buses alone or to school buses plus one or more other types of vehicles could be appropriate since the population of affected vehicles would include the type of vehicle (school buses) generally regarded as having the greatest safety need. However, S5.3.1 creates an anomaly by excluding school buses and applying only to a type of vehicle with a lesser safety need. NHTSA finds merit in the petitioner's argument that the requirements of S5.3.1 are inappropriate *at this time* for non-school buses if no comparable requirements are set for school buses.

The agency is proposing to amend Standard No. 121 to suspend the requirements of S5.3.1 for non-school buses. NHTSA is proposing this relief as a temporary measure to address the concerns involving the equity of Standard No. 121's applicability to non-school buses. The agency emphasizes that this action should not be construed in any manner as commenting negatively on antilock performance or the potential use of antilock systems in the vehicle industry. On the contrary, the agency has been actively involved with research on antilock systems to evaluate the performance of technology available currently in Europe, e.g., those manufactured by WABCO, BOSCH, LUCAS GIRLING and BENDIX-FRANCE. NHTSA plans also to undertake studies of the reliability and performance of antilock systems in fleet demonstration testing. Research has also been conducted on stopping distance performances of existing vehicles to obtain data for future reinstatement or revision of Standard No. 121's stopping distance requirements. NHTSA is encouraged by advances in antilock technology, and believes that its aggressive research program will adequately address past concerns with antilock systems.

Thus as a result of NHTSA's research, the agency might propose that stopping distance requirements be reinstated in the future for trucks, trailers and buses. Until that research is completed, however, the agency believes that the standard should affect manufacturers of non-school buses in the same manner as it affects manufacturers of other vehicles originally intended to be under its ambit (i.e. trucks, trailers, and school buses). A plea for equal treatment in the applicability of the standard has been made by the petitioner, and the agency tentatively belives that, in light of the ongoing research in this area, the requirements of S5.3.1. should be temporarily suspended for non-school buses as the school bus service brake stopping distance requirements had been in 1978.

NHTSA proposes to accomplish this by revising the last paragraph of S3, *Application*, to read as follows: "Notwithstanding any language to the contrary, sections S5.3.1, S5.3.1.1, S5.3.2., S5.3.2.1., S5.3.2.2, S5.7.1, S5.7.3(a) and S5.7.3(b) of this standard are not applicable to trucks and trailers, and section S5.3.1 of this standard is not applicable to buses." Paragraph S5.3.1. would also be revised to remove the phase, "Except for a school bus."

While this proposal would exclude all buses from the stopping distance requirements specified in S5.3.1, the agency has tentatively determined that the specifications of S5.3.1. should remain intact as currently set forth in the standard. This is proposed in order to disturb the actual text of the standard as little as possible. In that way, affected sections applicable to trucks, trailer, buses and school buses could most easily be reinstated in the future. However, this does not imply that reinstated requirements will be specified in the same manner as currently set forth in those affected sections.

Comments are requested on the agency's proposal. NHTSA is especially interested in comments from manufacturers who produce both school buses and non-school buses. The agency also requests comments regarding the possible reinstatement of the school bus stopping distance requirements at a future date.

The petitioner's request to exempt non-school buses from the requirements of paragraph S5.7.1, however, is denied. S5.7.1 specifies emergency brake system requirements that all buses must meet, including school buses. Thus, the agency does not accept the argument that non-school buses are unfairly subject to those requirements.

Proposed Effective Date

It is proposed that the revision of Standard No. 121, if adopted, be effective upon publication of the final rule in the **Federal Register**.

The change proposed by this notice would relieve a restriction whose application to bus manufacturers at this time has been tentatively determined by NHTSA to be inappropriate. The proposal does not specify different test procedures or additional requirements, nor does it require any leadtime for preparation by vehicle manufacturers. Therefore, NHTSA believes that good cause would exist for making this revision effective upon publication of the final rule.

Cost and Benefits

NHTSA has examined the impact of this rulemaking action and determined that it would not be major within the meaning of Executive Order 12291 or significant within the meaning of the Department of Transportation's regulatory policies and procedures. The agency has also determined that the economic and other impacts of this rulemaking action would be so minimal that a full regulatory evaluation is not required. The revision to Standard No. 121 proposed by this notice is intended to relieve an unfair restriction on bus manufacturers. Adoption of this proposal might reduce manufacturing costs slightly for manufacturers who would no longer need to procure antilock systems or maintain a separate inventory of those systems.

Regulatory Flexibility Act

NHTSA has also considered the impacts of this rulemaking action under the Regulatory Flexibility Act. I hereby certify that it would not have a significant economic impact on a substantial number of small entities. Accordingly, the agency has not prepared a preliminary regulatory flexibility analysis.

Few, if any, bus manufacturers would qualify as small entities. Any bus manufacturers that do qualify as small businesses might benefit to a small extent by the changes proposed in this notice since excluding buses from the stopping distance requirements allows manufacturers (such as Blue Bird) to produce buses without antilock systems.

Small governmental units and small organizations are generally affected by amendments to the Federal motor vehicle safety standards as purchasers or new motor vehicles and new motor vehicle equipment. However, these entities will not be affected by the proposed changes since the changes will not significantly affect the price of buses.

Environmental Effects

NHTSA has analyzed this rulemaking action for the purposes of the National Environmental Policy Act. The agency has determined that implementation of this action would not have any significant impact on the quality of the human environment.

Submission of Comments

Interested persons are invited to submit comments on the proposal. It is requested but not required that 10 copies be submitted. All comments must be limited not to exceed 15 pages in length. (49 CFR Part 553.21) Necessary attachments may be appended to these submissions without regard to the 15-page limit. This limitation is intended to encourage commenters to detail their primary arguments in a concise fashion.

If the commenter wishes to submit certain information under a claim of confidentiality, three copies of the complete submission, including purportedly confidential information, should be submitted to the Chief Counsel, NHTSA, at the street address given above, and seven copies from which the purportedly confidential information has been deleted should be submitted to the Docket Section. A request for confidentiality should be accompanied by a cover letter setting forth the information specified in the agency's confidential business information regulation (49 CFR Part 512).

All comments received before the close of business on the comment closing date indicated above will be considered, and will be available for examination in the docket at the above address both before and after that date. To the extent possible, comments filed after the closing date will also be considered. However, the rulemaking action may proceed at any time after that date, and comments received after the closing date and too late for consideration in regard to the action will be treated as suggestions for future rulemaking. The NHTSA will continue to file relevant material as it becomes available in the docket after the closing date, and it is recommended that interested persons continue to examine the docket for new material.

Persons desiring to be notified upon receipt of their comments in the rules docket should enclose, in the envelope with their comments, a self-addressed stamped postcard. Upon receiving the comments, the docket supervisor will return the postcard by mail.

List of Subjects in 49 CFR 571

Imports, Motor vehicle safety, Motor vehicles.

In consideration of the foregoing, it is proposed that 49 CFR 571.121 be amended as follows:

PART 571—FEDERAL MOTOR VEHICLE SAFETY STANDARDS

1. The authority citation for Part 571 would continue to read as follows:

Authority: 15 U.S.C. 1392, 1401, 1403, 1407; delegation of authority at 49 CFR 1.50.

§ 571.121 [Amended]

2. In § 571.121, S3 would be amended by revising the last paragraph to read as follows:

* * * * *

S3. * * *

Notwithstanding any language to the contrary, sections S5.3.1, S5.3.1.1, S5.3.2, S5.3.2.1, S5.3.2.2, S5.7.1, S5.7.3(a) and S5.7.3(b) of this standard are not applicable to trucks and trailers, and section S5.3.1 of this standard is not applicable to buses.

3. In § 157.121, S5.3.1 introductory text would be revised to read as follows:

S5.3.1 *Stopping distance—trucks and buses.* When stopped six times for each combination of weight, speed, and road condition specified in S5.3.1, in the sequence specified in Table I, the vehicle shall stop at least once in not more than the distance specified in Table II, measured from the point at which movement of the service brake control begins, without any part of the vehicle leaving the roadway and without lockup of any wheels at speeds above 10 mph except for:

* * * * *

Issued on July 2, 1986.

Barry Felrice,

Associate Administrator for Rulemaking.

[FR Doc. 86-15354 Filed 7-3-86; 9:30 am]

BILLING CODE 4910-59-M

DEPARTMENT OF COMMERCE

National Oceanic and Atmospheric Administration

50 CFR Part 655

[Docket No. 60107-6045]

Atlantic Mackerel, Squid, and Butterfish Fisheries

AGENCY: National Marine Fisheries Services (NMFS), NOAA Commerce.

ACTION: Notice of proposed adjustments to final initial annual specifications and request for comments.

SUMMARY: NOAA issues this notice to propose adjustments to the 1986–1987 final initial annual specifications for Atlantic mackerel, squids, and butterfish, and to request public comments. These adjustments are necessary because of changes made by recently approved Amendment 2 of the Fishery Management Plan for these species. The intent of this action is to conform the specifications to the provisions of Amendment 2.

DATE: Comments must be received on or before August 8, 1986.

ADDRESS: Send comments to Salvatore A. Testaverde, Northeast Regional Office, 2 State Fish Pier, Gloucester, MA 01930–3097. Mark on the outside of envelope, "Comments on Specifications."

FOR FURTHER INFORMATION CONTACT: Salvatore A. Testaverde, 617–281–3600, extension 273.

SUPPLEMENTARY INFORMATION: Recently approved portions of Amendment 2 (amendment) to the Fishery Management Plan for Atlantic Mackerel, Squid, and Butterfish Fisheries (FMP) (March 27, 1986, 51 FR 10547) changed several of the management measures for these species and revised the fishing year from a 12-month period of April 1–March 31, to a different 12-month period of January 1–December 31. Since the 1986–1987 final initial specifications for Atlanitc mackerel, squid, and butterfish were implemented April 1, 1986 (51 FR 17189, May 9, 1986, and 51 FR 11742, April 7, 1986) under Amendment 1, it is now necessary to adjust the current initial specifications to reflect changes. The Mid-Atlantic Fishery Management Council (Council) has submitted these recommendations to take into consideration the 1986 transitional year's specifications for the 9-month period from April 1.

Specifications

The following table lists the proposed adjustments to the final initial annual specifications for Atlantic mackerel, squids, and butterfish in metric tons (mt) of the maximum optimum yield (Max OY), allowable biological catch (ABC), allowable catch (AC), initial optimum yield (IOY), domestic annual harvest (DAH), domestic annual processing (DAP), joint venture processing (JVP), Reserve (for Fishing Year 1986–1987 only) and total allowable level of foreign fishing (TALFF). The 1986–1987 annual specifications are the amounts that the Regional Director, Northeast Region, had determined to be the appropriate levels of harvest for the start of the 1986–1987 fishing year. The 1986 transitional year's specifications are the final specifications as modified by the Council's recommended adjustments.

PROPOSED FINAL INITIAL SPECIFICATIONS FOR THE TRANSITIONAL 1986 FISHING YEAR (APRIL 1–DECEMBER 31, 1986)

Specification	Squid				Atlantic mackerel		Butterfish	
	Loligo		Illex					
	1986–87	1986	1986–87	1986	1986–87	1986	1986–87	1986
Max OY[a]	44,000	33,000	30,000	30,000	285,000	213,750	[b] 16,000	[b] 12,000
ABC	37,000	27,750	22,500	22,500		196,500	[b] 16,000	[b] 12,000
AC					262,000			
IOY	31,191	23,155	15,116	14,340	262,000	74,575	12,866	9,840
DAH	30,325	22,950	14,250	14,250	[c] 126,500	[d] 44,575	12,000	9,750
DAP	29,500	22,125	12,000	12,000	14,000	10,500	12,000	9,750
JVP	[e] 825	[e] 825	[e] 2,250	[f] 2,500	100,000	25,000	0	
Reserve[g]	0	0	0	0	67,750		0	0
TALFF	[h] 866	[h] 107	[h] 866	[i] 90	67,750	[i] 30,000	[h] 866	[i] 90

[a] This is the Maximum Optimum Yields (as stated in the FMP).
[b] IOY can rise to this amount.
[c] This amount includes 12,500 mt projected recreational catch.
[d] This amount includes 9,075 mt projected recreational catch.
[e] This initial amount represents 25 per cent of the JVP amounts requested by joint venture applicants to date.
[f] This initial amount represents 50 per cent of the JVP amounts requested by joint venture applicants to date.
[g] No Reserve specifications exist in the latest approved Amendment 2 to the FMP.
[h] Bycatch TALFFs required by Amendment 2.
[i] Includes allocations to foreign nations for calendar year 1986 as required by Amendment 2.

Loligo—The *Loligo* provisions of Amendment 1 and 2 are the same except for the foreign bycatch TALFF percentages. Therefore, to account for the transitional 9-month year, the proposed adjustments to the specifications (except for bycatch TALFF) represent 75 percent of those made for the entire 1986–87 fishing year. The bycatch TALFF amounts are adjusted as required by Amendment 2.

Illex—The *Illex* specifications remain unchanged except for the foreign bycatch TALFF percentages. The bycatch TALFF amounts are adjusted as required by Amendment 2. Since the *Illex* fishery essentially takes place during the summer and fall, the amounts for the other specifications were not reduced from those previously published.

Atlantic Mackerel—The management measures for Atlantic mackerel changed significantly from Amendment 1 to Amendment 2: The TALFF/Reserve provision was replaced by an IOY and nine economic factors (similar to squids), the recreational catch forecasting equation was respecified, the bycatch TALFF percentages were respecified, the minimum spawning stock biomass was increased from 400,000 mt to 600,000 mt, and the possibility of setting aside FO.1 (a reference point on the yield curve) as the maximum annual catch was added. In these proposed adjusted specifications, the ABC and DAP are 75 percent of the previous published amounts to account for the 9-month transition year. The 25,000 mt JVP amount, as well as the TALFF 30,000 mt amendment amounts, were approved by the Council to conduct Atlantic mackerel joint ventures with the associated directed foreign fishing.

Butterfish—In Amendment 2, the management measures for butterfish were changed to allow reductions in ABC from the maximum OY level of 16,000 mt if stock conditions warrant, and to revise the bycatch TALFF percentages. The butterfish specifications are 75 percent of the previously published amounts to account for the transitional year.

Other Matters

This action is authorized by 50 CFR Part 655, and complies with Executive Order 12291.

(16 U.S.C. 1801 *et seq.*)

List of Subjects in 50 CFR Part 655

Fisheries, Reporting and recordkeeping requirements.

Dated: July 3, 1986.

Carmen J. Blondin,

Deputy Assistant Administrator For Fisheries Resource Management, National Marine Fisheries Service

[FR Doc. 86–15427 Filed 7–3–86; 2:48 pm]

BILLING CODE 3510-22-M

Notices

Federal Register
Vol. 51, No. 131
Wednesday, July 9, 1986

This section of the FEDERAL REGISTER contains documents other than rules or proposed rules that are applicable to the public. Notices of hearings and investigations, committee meetings, agency decisions and rulings, delegations of authority, filing of petitions and applications and agency statements of organization and functions are examples of documents appearing in this section.

DEPARTMENT OF AGRICULTURE

Forms Under Review by Office of Management and Budget

July 2, 1986.

The Department of Agriculture has submitted to OMB for review the following proposals for the collection of information under the provisions of the Paperwork Reduction Act (44 U.S.C. Chapter 35) since the last list was published. This list is grouped into new proposals, revisions, extensions, or reinstatements. Each entry contains the following information:

(1) Agency proposing the information collection; (2) Title of the information collection; (3) Form number(s), if applicable; (4) How often the information is requested; (5) Who will be required or asked to report; (6) An estimate of the number of responses; (7) An estimate of the total number of hours needed to provide the information; (8) An indication of whether section 3504(h) of Pub. L. 96-511 applies; (9) Name and telephone number of the agency contact person.

Questions about the items in the listing should be directed to the agency person named at the end of each entry. Copies of the proposed forms and supporting documents may be obtained from: Department Clearance Officer, USDA, OIRM, Room 404-W Admin. Bldg., Washington, DC 20250, (202) 447-2118.

Comments on any of the items listed should be submitted directly to: Office of Information and Regulatory Affairs, Office of Management and Budget, Washington, DC 20503, Attn: Desk Officer for USDA.

If you anticipate commenting on a submission but find that preparation time will prevent you from doing so promptly, you should advise the OMB Desk Officer of your intent as early as possible.

Extension

• Agricultural Marketing Service
Reporting and recordkeeping requirements under the Egg Research and Consumer Information Act
Not Government Forms—used by American Egg Board
Recordkeeping; Monthly; Annually
Farms; Businesses or other for-profit; 18,872 responses; 3,136 hours; not applicable under 3504(h)
Janice L. Lockard, (202) 382-8132

• Agricultural Marketing Service
Lawn and Turf Seed Mixtures, Germination Test Dates, and Certain Labeling Requirements Under the Federal Seed Act
None
Recordkeeping; On occasion
State and Local Governments; Farms; Businesses or other for-profit; Small businesses or organizations; 14,625 responses; 37,238 hours; not applicable under 3504(h)
Donald W. Ator, (202) 447-9340

New

• Statistical Research Service
Farm Energy Survey
One time
Farms; 1,080 responses; 805 hours; not applicable under 3504(h)
William A. Camp, (615) 751-6889

Revision

• Farmers Home Administration
Request for Verification of Employment
FmHA 1910-5
On occasion
Individuals or households; State or local governments; Businesses or other for-profit; Small businesses or organizations; 812,500 responses; 203,125 hours; not applicable under 3504(h)
Jack Holston, (202) 382-9736.

Donald E. Hulcher,
Acting Departmental Clearance Officer.
[FR Doc. 86-15466 Filed 7-8-86; 8:45 am]
BILLING CODE 3410-01-M

COMMISSION ON CIVIL RIGHTS

Agenda and Notice of Public Meeting; Michigan Advisory Committee

Notice is hereby given, pursuant to the provisions of the Rules and Regulations of the U.S. Commission on Civil Rights, that a meeting of the Michigan Advisory Committee to the Commission will convene at 6:00 p.m. and adjourn at 9:00 p.m. on July 23, 1986, at the Sheraton-Oaks Hotel, 27000 Sheraton Drive, Novi, Michigan. The purpose of the meeting is to plan Committee projects.

Persons desiring additional information, or planning a presentation to the Committee, should contact Committee Chairperson, Charles Tobias or Clark Roberts, Director of the Midwestern Regional Office at (312) 353-7371, (TDD 312/886-2188). Hearing impaired persons who will attend the meeting and require the services of a sign language interpreter, should contact the Regional Office at least five (5) working days before the scheduled date of the meeting.

The meeting will be conducted purusant to the provisions of the rules and regulations of the Commission.

Dated at Washington, DC, July 3, 1986.

Yvonne E. Schumacher,
Program Specialist for Regional Programs.
[FR Doc. 86-15472 Filed 7-8-86; 8:45 am]
BILLING CODE 6335-01-M

Agenda and Notice of Public Meeting; Utah Advisory Committee

Notice is hereby given, pursuant to the provisions of the Rules and Regulations of the U.S. Commission on Civil Rights, that a meeting of the Utah Advisory Committee to the Commission will convene at 7:00 p.m. and adjourn at 9:30 p.m. on July 22, 1986, at the State Office of Education Building, 250 East 500 South, Salt Lake City, Utah. The purpose of the meeting is to review and approve a briefing memorandum to the Commissioners on pay equity, and plan future activities.

Persons desiring additional information, or planning a presentation to the Committee, should contact Committee Chairperson, Wilfred Bocage or William Muldrow, Acting Director of the Rocky Mountain Regional Office at (303) 844-2211, (TDD 303/844-3031). Hearing impaired persons who will attend the meeting and require the services of a sign language interpreter, should contact the Regional Office at least five (5) working days before the scheduled date of the meeting.

The meeting will be conducted pursuant to the provisions of the rules and regulations of the Commission.

Dated at Washington, DC, July 3, 1986.

Ann E. Goode,

Program Specialist for Regional Programs.

[FR Doc. 86-15473 Filed 7-8-86; 8:45 am]

BILLING CODE 6335-01-M

DEPARTMENT OF COMMERCE

Agency Form Under Review by the Office of Management and Budget (OMB)

DOC has submitted to OMB for clearance the following proposal for collection of information under the provisions of the Paperwork Reduction Act (44 U.S.C. Chapter 35).

Agency: Bureau of the Census
Title: Questionnaire Design Project for Decennial Census Forms
Form Number: Agency—DC-2-U(F); OMB—NA
Type of Request: New collection
Burden: 600 respondents; 900 reporting hours
Needs and Uses: This program of questionnaire design research for the 1990 Decennial Census will be used to refine the question wording, layout, and instructions for the census questionnaire which will be administered to the entire population.
Affected Public: Individuals or households
Frequency: One time only
Respondent's Obligation: Voluntary
OMB Desk Officer: Timothy Sprehe, 395-4814

Copies of the above information collection proposal can be obtained by calling or writing DOC Clearance Officer, Edward Michals, (202) 377-4217, Department of Commerce, Room 6622, 14th and Constitution Avenue NW., Washington, DC 20230.

Written comments and recommendations for the proposed information collection should be sent to Timothy Sprehe, OMB Desk Officer, Room 3235, New Executive Office Building, Washington, DC 20503.

Dated: July 3, 1986.

Edward Michals,

Departmental Clearance Officer, Information Management Division, Office of Information Resources Management.

[FR Doc. 86-15431 Filed 7-8-86; 8:45 am]

BILLING CODE 3510-07-M

International Trade Administration

Initiation of Antidumping Duty Administrative Reviews

AGENCY: International Trade Administration/Import Administration, Department of Commerce.

ACTION: Notice of Initiation of Antidumping Duty Administrative Reviews.

SUMMARY: The Department of Commerce has received requests to conduct administrative reviews of various antidumping duty orders and findings. In accordance with the Commerce Regulations, we are initiating those administrative reviews.

EFFECTIVE DATE: July 9, 1986.

FOR FURTHER INFORMATION CONTACT: William L. Matthews, Office of Compliance, International Trade Administration, U.S. Department of Commerce, Washington, DC 20230; telephone: (202) 377-5253.

SUPPLEMENTARY INFORMATION:

Background

On August 12, 1985, the Department of Commerce ("the Department") published in the **Federal Register** (50 FR 32556) a notice outlining the procedures for requesting administrative reviews. The Department has received timely requests, in accordance with § 353.53a(a)(5) of the Commerce Regulations, for administrative reviews of various antidumping duty orders and findings.

Initiation of Reviews

In accordance with § 353.53a(c) of the Commerce Regulations, we are initiating administrative reviews of the following antidumping duty orders and findings. We intend to issue the final results of these reviews no later than July 31, 1987.

Antidumping proceedings and firms	Periods to be reviewed
Replacement parts for self-propelled paving equipment from Canada:	
Barber-Greene (Canada)	09/83—08/85
General	09/83—08/85
Parker Hannifin	09/83—08/85
SF Tubing	09/83—08/85
Anyhydrous Sodium Metasilicate from France:	
Rhone-Poulenc	01/83—12/84
Nitrocellulose from France:	
SNPE	08/84—07/85
Pressure sensitive plastic tape from Italy:	
Autoadesivitalia	10/06/82—09/84
Certain steel pipes and tube from Japan:	
Kuze Bellows	03/82—09/84
Ontario Hydro	01/83—06/83
Sanko Seisakusho	03/82—09/84
Tokyo Seimitsukan	03/82—09/84
Fish netting of manmade fibers from Japan:	
Amikan	06/82—05/85
Fukui	06/82—09/83
Hakodate	05/84—05/85
Hakodate/Mitsui	06/82—09/83
	05/84—05/85
Nagaura Seimosho	06/82—05/85
Nippon Kenmo	06/82—09/83
	05/84—05/85
Osada/Nichimen	10/83—05/85
Toyama	06/80—05/85
Yamaji	05/84—05/85
Portable electric typewriters from Japan:	
Brother	05/21/82—04/85
Nakajima Ali	05/82—04/85
Ricoh	05/81—05/85
Silver	04/82—04/85
Roller chain, other than bicycle, from Japan:	
APC Corp	04/78—03/79
Asia Machinery	04/78—03/79
	04/83—03/85
Caddy Japan	04/84—03/85
Central Industries	04/81—03/85
Daido Kogyo	09/75—03/79
Daido Kogyo/Daido Corp.	04/83—03/85
Daido Kogyo/Enuma	10/75—03/79
Daido Kogyo/Meisei Trading	10/75—03/79
Deer Island	09/72—03/79
	04/83—03/85
Enuma	02/77—03/79
Enuma/Daido Corp.	04/83—03/85
Enuma/Meisei Trading	09/77—03/79
HIC	12/83—03/85
Honda	04/76—03/79
	10/80—10/8/82
Hitachi Metals	12/83—03/85
Isuzu	04/84—03/85
Izumi	04/83—03/85
Kaga Kogyo/APC	04/81—03/85
Kaga Koken	04/82—11/83
Katayama	04/83—03/85
Meisei	04/75—03/79
Mitsubishi Motors	04/83—11/83
Naniwa Kogyo	04/83—11/83
Nissan Motors	04/78—03/79
	04/83—03/85
Oriental Chain	01/81—03/85
Pulton Chain	04/81—03/85
Pulton Chain/HIC	04/81—03/85
Pulton Chain/I & OC	04/81—03/85
Rocky Asia	04/78—03/79
	04/83—03/85
Shima Trading	10/77—03/79
	04/83—11/83
Sugiyama/Hokoku	04/81—03/85
Sugiyama/I & OC	04/81—03/85
Sugiyama/Harima Entpz./San Fernando (Japan)	04/81—03/85
Suzuki	04/83—03/85
Takasago	04/83—03/85
Tsubakimoto	03/72—03/79
	12/79—03/81
	09/83—03/85
Yamakyu	04/83—03/85
Tapered roller bearings and certain components thereof from Japan:	
Koyo Seiko	04/74—07/85
Mitsubishi Motors	01/80—07/85
Nachi	08/80—07/85
Nippon Seiko (NSK)	04/74—07/85
Sumitomo Yale	08/80—07/85
Televisions from Japan:	
Fujitsu General	04/83—02/85
Hitachi	04/83—02/85
Matsushita	04/83—02/85
Mitsubishi	04/83—02/85
NEC	04/83—02/85
Orion Electric	04/83—02/85
Otake Trading	04/83—02/85
Sanyo	04/83—02/85
Sharp	04/83—02/85
Toel Electric	04/83—02/85
Toshiba	04/83—02/85
Victor (JVC)	04/83—02/85
Certain Steel wire nails from S. Korea:	
Kabul	02/03/82—09/84
Kuk Dong	02/03/82—09/84
Kuk Dong/C. Itoh	02/03/82—09/84
Circular pipes and tubes from S. Korea:	
Hyundai Corp/Hyundai Pipe	10/24/83—09/84
Korea Steel Pipe	10/24/83—09/85
Pusan Steel Pipe	10/24/83—09/84
Rectangular pipes and tubes from S. Korea:	
Union Steel	10/24/83—09/84
Carbon steel wire rod from Trinidad/Tobago:	
ISCOTT	05/83—10/84

These initiations and this notice are in accordance with section 751(a) of the Tariff Act of 1930 (19 U.S.C. 1675(a)) and § 353.53a(c) of the Commerce Regulations (19 CFR 353.52a(c); 50 FR 32556, August 13, 1985.

Dated: July 2, 1986.

Gilbert B. Kaplan,

Deputy Assistant Secretary for Import Administration.

[FR Doc. 86-15455 Filed 7-8-86; 8:45 am]

BILLING CODE 3510-DS-M

Initiation of Antidumping Duty Administrative Reviews

AGENCY: International Trade Administration/Import Administration Department of Commerce.

ACTION: Notice of Initiation of Antidumping Duty Administrative Reviews.

SUMMARY: The Department of Commerce has received requests to conduct adminstrative reviews of various antidumping duty orders and findings. In accordance with the Commerce Regulations, we are initiating those administrative reviews.

EFFECTIVE DATE: July 9, 1986.

FOR FURTHER INFORMATION CONTACT: William L. Matthews, Office of Compliance, International Trade Administration, U.S. Department of Commerce, Washington, DC 20230; telephone: (202) 377-5253.

SUPPLEMENTARY INFORMATION:

Background

On August 12, 1985, the Department of Commerce ("the Department") published in the **Federal Register** (50 FR 32556) a notice outlining the procedures for requesting administrative reviews. The Department has received timely requests, in accordance with § 353.53a(a)(5) of the Commerce Regulations, for administrative reviews of various antidumping duty orders and findings.

Initiation of Reviews

In accordance with § 353.53(a)(c) of the Commerce Regulations, we are initiating administrative reviews of the following antidumping duty orders and findings. We intend to issue the final results of these reviews no later than July 31, 1987.

Antidumping proceedings and firms	Periods to be reviewed
Elemental sulphur from Canada:	
B.P. Resources	12/83—11/84
Cities Service	12/83—11/84
Drummond Oil	12/83—11/84
Imperial Oil	12/83—11/84
Koch	12/83—11/84
Mobil Oil	01/79—11/81
Real Int'l Marketing	12/83—11/84
Suncor	12/83—11/84
Texaco Canada Resources	12/83—11/84
Union Texas (Allied)	12/83—11/84
Instant potato granules from Canada:	
McCain	09/83—11/84
Vauxhall	09/83—11/84
Replacement parts for self-propelled paving equipment from Canada:	
Fortress Allatt	09/83—08/85
Steel jacks from Canada:	
J.C. Hallman	09/82—08/83
Portland cement from the Dominican Republic:	
Cementos Nacionales	06/83—04/85
Commercializadora del Caribe	06/83—04/85
Fabrica Dominicana de Cemento	06/83—04/85
Viscose rayon staple fiber from Finland:	
Kemira Oy	03/83—02/85
Large power transformers from France:	
Alsthom-Atlantique	05/80—05/85
Large power transformers from Italy:	
Ansaldo Componenti	06/83—05/85
Legnano	05/74—05/85
Woodwind pads for musical instruments from Italy:	
Pads	04/25/84—08/85
Pisoni	04/25/84—08/85
Large electric motors from Japan:	
Toshiba	04/82—11/84

These initiations and this notice are in accordance with section 751(a) of the Tariff Act of 1930 (19 U.S.C. 1675(a)) and § 353.53(c) of the Commerce Regulations (19 CFR 353.53a(c); 50 FR 32556, August 13, 1985).

Dated: July 2, 1986.

Gilbert B. Kaplan,

Deputy Assistant Secretary for Import Administration.

[FR Doc. 86-15456 Filed 7-8-86; 8:45 am]

BILLING CODE 3510-DS-M

Antidumping or Countervailing Duty Order, Finding, or Suspended Investigation; Opportunity To Request Administrative Review

AGENCY: International Trade Administration, Import Administration, Commerce.

ACTION: Notice of Opportunity to Request Administrative Review of Antidumping or Countervailing Duty Order, Finding, or Suspended Investigation.

Background

Each year during the anniversary month of the publication of an antidumping or countervailing duty order, finding, or suspension of investigation, an interested party as defined in section 771(9) of the Tariff Act of 1930 may request, in accordance with § 353.53a or 355.10 of the Commerce Regulations, that the Department of Commerce ("the Department") conduct an administrative review of that antidumping or countervailing duty order, finding, or suspended investigation.

Opportunity To Request a Review

Not later than July 31, 1986, interested parties may request administrative review of the following orders, findings, or suspended investigations, with anniversary dates in July, for the following periods:

	Period
Antidumping duty proceeding:	
Salted codfish from Canada	01/29/85-06/30/86
Synthetic Methionine from Japan	07/01/85-06/30/86
Fabric expanded neoprene laminate from Japan	03/15/85-06/30/86
High power microwave amplifiers from Japan	07/01/85-06/30/86
Pig iron from Canada	07/01/85-06/30/86
Tool steel from the Federal Republic of Germany	07/01/85-02/28/86
Countervailing duty proceeding:	
Sugar from the European Communities	01/01/85-12/31/85
Fasteners from India	01/01/85-12/31/85
Leather wearing apparel form Uruguay	01/01/85-12/31/85

A request must conform to the Department's interim final rule published in the **Federal Register** (50 FR 32556) on August 13, 1985. Seven copies of the request should be submitted to the Deputy Assistant Secretary for Import Administration, International Trade Administration, Room B-099, U.S. Department of Commerce, Washington, DC 20230.

The Department will publish in the **Federal Register** a notice of "Initiation of Antidumping (Countervailing) Duty Administrative Review," for requests received by July 31, 1986.

If the Department does not receive by July 31, 1986 a request for review of entries covered by an order or finding listed in this notice and for the period identified above, the Department will instruct the Customs Service to assess antidumping or countervailing duties on those entries at a rate equal to the cash deposit of (or bond for) estimated antidumping or countervailing duties required on those entries at the time of entry, or withdrawal from warehouse, for consumption and to continue to collect the cash deposit previously ordered.

This notice is not required by statute but is published as a service to the international trading community.

Dated: July 2, 1986.

Gilbert B. Kaplan,

Deputy Assistant Secretary, Import Administration.

[FR Doc. 86-15458 Filed 7-8-86; 8:45 am]

BILLING CODE 3510-DS-M

[A-427-044]

Stainless Steel Wire Rods From France; Intention To Review and Preliminary Results of Changed Circumstances Administration Review and Tentative Determination To Revoke Antidumping Duty Finding

AGENCY: International Trade Administration, Import Administration, Commerce.

ACTION: Notice of intention to review and preliminary results of changed circumstances administrative review and tentative determination to revoke antidumping duty finding.

SUMMARY: The Department of Commerce has received information which shows changed circumstances sufficient to warrant an administrative review, under section 751(b)(1) of the Tariff Act of 1930, of the antidumping duty finding on stainless steel wire rods from France. The review covers the period from March 1, 1986. The remaining petitioners to this proceeding have notified the Deparment that they are no longer interested in the antidumping duty finding. Their affirmative statement of no interest provides a reasonable basis for the Department to revoke the finding. Therefore, we tentatively determine to revoke the finding. In accordance with the petitioners' notification, the revocation will apply to all stainless steel wire rods exported on or after March 1, 1986. Interested parties are invited to comment on these preliminary results and tentative determination to revoke.

EFFECTIVE DATE: March 1, 1986.

FOR FURTHER INFORMATION CONTACT: Linda C. Odom or Robert J. Marenick, Office of Compliance, International Trade Administration, U.S. Department of Commerce, Washington, DC 20230; telephone: (202) 377-1130/5255.

SUPPLEMENTARY INFORMATION:

Background

On August 28, 1973, the Department of Commerce ("the Department") published in the **Federal Register** (38 FR 22961) an antidumping duty finding on stainless steel wire rods from France.

In a letter dated April 4, 1986, Al Tech Specialty Steel Corporation, Armco, Inc., Carpenter Technology Corporation, and Crucible Stainless Steel Division of Colt Industries, Inc., the remaining petitioners in this proceeding, informed the Department that they were no longer interested in the finding and stated their support of revocation of the finding. Under section 751 of the Tariff Act of 1930 ("the Tariff Act"), the Department may revoke an antidumping duty finding that is no longer of interest to domestic interested parties.

Scope of the Review

Imports covered by the review are shipments of stainless alloy steel wire rods tempered, treated, or partly manufactured, currently classifiable under item 607.3400 of the Tariff Schedules of the United States Annotated. The review covers the period from March 1, 1986.

Preliminary Results of the Review and Tentative Determination

As a result of our review, we preliminarily determine that the petitioners' affirmative statement of no interest in continuation of the antidumping duty finding on stainless steel wire rods from France provides a reasonable basis for revocation of the finding.

Therefore, we tentatively determine to revoke the finding on stainless steel wire rods from France effective March 1, 1986. We intend to instruct the Customs Service to proceed with liquidation of all unliquidated entries of this merchandise exported on or after March 1, 1986, without regard to antidumping duties and to refund any estimated antidumping duties collected with respect to those entries. The current requirement for a cash deposit of estimated antidumping duties will continue until publication of the final results of this review. This notice does not cover unliquidated entries of stainless steel wire rods from France which were exported prior to March 1, 1986. The Department will cover any such entries in a separate review, if one is requested.

Interested parties may submit written comments on these preliminary results and tentative determination to revoke within 30 days of the date of publication of this notice, and may request a hearing within five days of the date of publication. Any hearing, if requested, will be held 45 days after the date of publication or the first workday thereafter. The Department will publish the final results of the review and its decision on revocation, including its analysis of issues raised in any such written comments or at a hearing.

This intention to review, administrative review, tentative determination to revoke, and notice are in accordance with sections 751(b) and (c) of the Tariff Act (19 U.S.C. 1675(b), (c)) and § § 353.53 and 353.54 of the Commerce Regulations (19 CFR 353.53, 353.54).

Dated: July 2, 1986.

Gilbert B. Kaplan,

Deputy Assistant Secretary, Import Administration.

[FR Doc. 86-15457 Filed 7-8-86; 8:45 am]

BILLING CODE 3510-DS-M

Minority Business Development Agency

Transmittal No. DRO-Lubbock; Project I.D. No. DRO-Lubbock

Lubblock Minority Business Development Center (MBDC)

Summary: The Minority Business Development Agency (MBDC) announces that it is soliciting competitive applications under its Minority Business Development Center (MBDC) Program to operate an MBDC for a *three (3) year period*, subject to available funds. The cost of performance for the first *twelve (12) months* is estimated at *$288,771* for the project's performance period of *12/01/86 to 11/30/87*. The MBDC will operate in the *Lubbock and Midland-Odessa, Texas, Standard Metropolitan Statistical Area (SMA).*

The first year's cost for the MBDC will consist of:

	Lubbock	Midland-Odessa	Total
Federal Funding	154,545	90,910	245,455
Non-Federal Funding [1]	27,273	16,043	43,316
Grand Total	181,818	106,953	288,771

[1] Can be a combination of cash, in-kind contribution and fees for services.

The funding instrument for the MBDC will be a cooperative agreement and competition is open to individuals, nonprofit and for-profit organizations, local and state governments, American Indian Tribes and educational institutions.

The MBDC will provide management and technical assistance (M&TA) to eligible clients for the establishment and operation of businesses. The MBDC program is designed to assist those minority businesses that have the highest potential for success. In order to accomplish this, MBDA supports MBDC programs that can: coordinate and broker public and private sector resources on behalf of minority individuals and firms; offer them a full range of management and technical assistance (M&TA); and serve as a conduit of information and assistance regarding minority business.

Applications will be judged on the experience and capability of the firm

and its staff in addressing the needs of minority business individuals and organizations; the resources available to the firm in providing management and technical assistance (M&TA); the firm's proposed approach to performing the work requirements included in the application; and the firm's estimated cost for providing such assistance. It is advisable that applicants have an existing office in the geographic region for which they are applying.

The MBDC will operate for a three (3) year period with periodic reviews culminating in annual evaluations to detemine if funding for the project should continue. Continued funding will be at the discretion of MBDA, based on such factors as an MBDC's satisfactory performance, the availability of funds, and Agency priorities.

Closing Date: The closing date for receipt of application is August 22, 1986.

ADDRESS: MBDA—Dallas Regioal Office, 1100 Commerce Street, Suite 7B23, Dallas, Texas 75242–0790.

FOR FURTHER INFORMATION CONTACT: Marie Hearne, Business Development Clerk, Dallas Regional Office, 214/767–8001.

SUPPLEMENTARY INFORMATION: Questions concerning the preceding information, copies of application kits and applicable regulations can be obtained at the above address.

Melda Cabrera,

Acting Regional Director, Minority Business Development Agency, Dallas Regional Office.

July 2, 1986.

Section B. Project Specifications

Program Number and Title: *11.800 Minority Business Development*

Project Name: *Lubbock and Midland-Odessa* MBDC (Geographic Area or MSA)

Project Identification Number: *DRO-Lubbock*

Project Start and End Dates: December 1, 1986 thru November 30, 1987

Project Duration: 12 months

	Lubbock	Midland-Odessa	Total
Federal Funding	154,545	90,910	245,455
Non-Federal Funding [1]	27,273	16,043	43,316
Grand Total	181,818	106,953	288,771

[1] Can be a condition of cash, in-kind contribution and fees for services.

Closing Date for Submission of this Application: *August 22, 1986*

Geographic Specification: The Minority Business Development Center shall offer assistance in the geographic area of: *Lubbock and Midland-Odessa, Texas Standard Metropolitan Statistical Area (SMSA).*

Eligibility Criteria: There are no eligibility restrictions for this project. Eligible applicants may include individuals, non-profit organizations, for-profit firms, local and state governments, American Indian Tribes, and educational institutions.

Project Period: The competitive award period will be approximately three years consisting of three separate budget periods. Performance evaluations will be conducted, and funding levels will be established for each of three budget periods. The MBDC will receive continued funding, after the initial competitive year, at the discretion of MBDA based upon the availability of funds, the MBDC's performance, and Agency priorities.

MBDA's minimum level of effort:

Financial packages *$2,387,000-Lubbock, $1,408,330-Midland/Odessa*

Procurements *$5,360,000-Lubbock, $3,162,400-Midland/Odessa*

Billable M&TA *$137,000-Lubbock, $80,830-Midland/Odessa*

Number of Cleints *54-Lubbock, 32-Midland/Odessa*

M&TA Hours *2,740-Lubbock, 1,617-Midland/Odessa*

Number of Professional Manyears *4*

Note.—Applicants proposed levels, whether the same, higher or lower must be justified.

[FR Doc. 86–15436 Filed 7–8–86; 8:45 am]

BILLING CODE 3510-21-M

National Oceanic and Atmospheric Administration

Coastal Zone Management; Federal Consistency Appeal by Cities Service Oil and Gas Corp. From an Objection by the California Coastal Commission

AGENCY: National Oceanic and Atmospheric Administration, Commerce.

ACTION: Withdrawal of appeal.

On April 18, 1986, Cities Service Oil and Gas Corporation requested that it be allowed to withdraw its appeal filed under section 307(c)(3) (A) and (B) of the Coastal Zone Management Act of 1972, as amended, 16 U.S.C. 1451 *et seq.* The appeal was filed from a September 1985 objection by the California Coastal Commission to the activities outlined in Cities Service's proposed Development and Production Plan (DPP) for Outer Continental Lease Tract P409 located approximately ten miles offshore Point Sal, California. The Commission found it was unable to determine whether the DPP was consistent with the federally-approved California Coastal Management Program because the DPP contained insufficient information.

The appeal was stayed by the Secretary of Commerce to allow the parties to negotiate. As a result of these negotiations, Cities Service has agreed to submit an amended DPP which will be subject to a new consistency review by the Commission.

Thus, for purposes of the appeal, the amended DPP supplants the original DPP and the basis for the Commission's original objection no longer exists.

On June 19, 1986, the Secretary of Commerce granted Cities' request to withdraw its appeal. Consequently, Cities Service will be barred from filing another appeal from the Commission's September 1985 objection. However, should the Commission object to the amended DPP, Cities Service may file another appeal to the Secretary under regulations at 15 CFR Part 930.

FOR FURTHER INFORMATION CONTACT: L. Pittman, Attorney/Advisor, Office of the Assistant General Counsel for Ocean Services, National Oceanic and Atmospheric Administration, Washington, DC 20235; (202) 673–5200.

(Federal Domestic Assistance Catalog No. 11.419 Coastal Zone Management Program Administration)

Dated: June 26, 1986.

Daniel W. McGovern,

General Counsel.

[FR Doc. 86–15402 Filed 7–8–86; 8:45 am]

BILLING CODE 3510-08-M

COMMITTEE FOR THE IMPLEMENTATION OF TEXTILE AGREEMENTS

Adjusting the Import Limit for Certain Man-Made Fiber Textile Products Produced or Manufactured in Pakistan

July 2, 1986.

The Chairman of the Committee for the Implementation of Textile Agreements (CITA), under the authority contained in E.O. 11651 of March 3, 1972, as amended, has issued the directive published below to the Commissioner of Customs to be effective on July 9, 1986. For further information contact Diana Solkoff, International Trade Specialist, Office of Textiles and Apparel, U.S. Department of Commerce, (202) 377–4212.

Background

On June 18, 1986, a notice was published in the Federal Register (51 FR 22107), which announced that, effective on June 19, 1986, in order to forestall

serious market disruption, the United States Government, under the terms of Article 3.6 of the Arrangement Regarding International Trade in Textiles, would control imports of lightweight, plainweave polyester/cotton fabric in Category 613–C (only TSUSA numbers 338.5039, 338.5042, 338.5043, 338.5047, 338.5048, 338.5053, 338.5054, 338.5058 and 338.5059), exported on and after April 27, 1986 and extending through October 26, 1986. Inasmuch as the Governments of the United States and Pakistan have been unable to schedule consultations during the sixty-day consultation period, which ended on June 25, 1986, and to avoid serious disruption of trade, the Committee for the Implementation of Textile Agreements has decided to extend the control period to the twelve-month period which began on April 27, 1986 and extends through April 26, 1986 for goods exported during the twelve-month period at a level of 14,049,976 square yards.

Accordingly, in the letter published below, the Chairman of the Committee for the Implementation of Textile Agreements directs the Commissioner of Customs to prohibit entry into the United States for consumption, or withdrawal from warehouse for consumption, of lightweight, plainweave polyester/cotton fabric in Category 613–C exported during the twelve-month period which began on April 27, 1986 and extends through April 26, 1987, in excess of the designated level of restraint.

The United States remains committed to finding a solution concerning this category. Should such a solution be reached in consultations with the Government of Pakistan, further notice will be published in the **Federal Register.**

A description of the textle categories in terms of T.S.U.S.A. numbers was published in the **Federal Register** on December 13, 1983 (47 FR 55709), as amended on April 7, 1983 (48 FR 15175), May 3, 1983 (48 FR 19924), December 14, 1983 (48 FR 55607), December 30, 1983 (48 FR 57584), April 4, 1984 (49 FR 13397), June 28, 1983 (49 FR 26622), July 16, 1984 (49 FR 28754), November 9, 1984 (49 FR 44782), and in Statistical Headnote 5, Schedule 3 of the Tariff Schedules of the United States Annotated (1986).

William H. Houston III,

Chairman, Committee for the Implementation of Textile Agreements.

July 2, 1986.

Committee for the Implementation of Textile Agreements

Commissioner of Customs,

Department of the Treasury, Washington, DC 20229.

Dear Mr. Commissioner: This directive cancels and supersedes the directive of June 13, 1986 concerning certain man-made fiber textile products in Category 613–C, produced or manufactured in Pakistan.

Under the terms of section 204 of the Agricultural Act of 1956, as amended (7 U.S.C. 1854), and the Agreement Regarding International Trade in Textiles done at Geneva on December 20, 1973, as extended on December 15, 1977 and December 22, 1981; and in accordance with the provisions of Executive Order 11651 of March 3, 1972, as amended, you are directed to prohibit, effective on July 9, 1986, entry into the United States for consumption and withdrawal from warehouse for consumption of lightweight, plainweave polyester/cotton fabric in Category 613–C,[1] produced or manufactured in Pakistan and exported during the twelve-month period which began on April 27, 1986 and extends through April 26, 1987, in excess of 14,049,876 square yards.[2]

Textile products in Category 613–C which have been exported to the United States prior to April 27, 1986 shall not be subject to this directive.

Textile products in Category 613–C which have been released from the custody of the U.S. Customs Service under the provisions of 19 U.S.C. 1448(b) or 1484(a)(1)(A) prior to the effective date of this directive shall not be denied entry under this directive.

A description of the textile categories in terms of T.S.U.S.A. numbers was published in the **Federal Register** on December 13, 1982 (47 FR 55709), as amended on April 7, 1983 (48 FR 15175), May 3, 1983 (48 FR 19924), December 14, 1983 (48 FR 55607), December 30, 1983 (48 FR 57584), April 4, 1984 (49 FR 13397), June 28, 1984 (49 FR 26622), July 16, 1984 (49 FR 28754), November 9, 1984 (49 FR 44782), and in Statistical Headnote 5, Schedule 3 of the Tariff Schedules of the United States Annotated (1986).

In carrying out the above directions, the Commissioner of Customs should construe entry into the United States for consumption to include entry for consumption into the Commonwealth of Puerto Rico.

The Committee for the Implementation of Textile Agreements had determined that this action falls within the foreign affairs exception to the rulemaking provisions of 5 U.S.C. 553(a)(1).

Sincerely,

William H. Houston III,

Chairman, Committee for the Implementation of Textile Agreements.

[FR Doc. 86–15430 Filed 7–8–86; 8:45 am]

BILLING CODE 3510-DR-M

[1] In Category 613, only TSUSA numbers 338.5039, 338.5042, 338.5043, 338.5047, 338.5048, 338.5053, 338.5054, 338.5058 and 338.5059.

[2] The limit has not been adjusted to account for any imports exported after April 26, 1986.

DEPARTMENT OF EDUCATION

Notice of Proposed Information Collection Requests

AGENCY: Department of Education.

ACTION: Proposed information collection requests.

SUMMARY: The Director, Information Resources Management Service invites comments on the proposed information collection requests as required by the Paperwork Reduction Act of 1980.

DATE: Interested persons are invited to submit comments on or before August 8, 1986.

ADDRESSES: Written comments should be addressed to the Office of Information and Regulatory Affairs, Attention: Desk Officer, Department of Education, Office of Management and Budget, 726 Jackson Place NW., Room 3208, New Executive Office Building, Washington, DC 20503. Requests for copies of the proposed information collection requests should be addressed to Margaret B. Webster, Department of Education, 400 Maryland Avenue SW., Room 4074, Switzer Building, Washington DC 20202.

FOR FURTHER INFORMATION CONTACT: Margaret B. Webster (202) 426–7304.

SUPPLEMENTARY INFORMATION: Section 3517 of the Paperwork Reduction Act of 1980 (44 U.S.C. Chapter 35) requires that the Office of Management and Budget (OMB) provide interested Federal agencies and the public an early opportunity to comment on information collection requests. OMB may amend or waive the requirement for public consultation to the extent that public participation in the approval process would defeat the purpose of the information collection, violate State or Federal law, or substantially interfere with an agency's ability to perform its statutory obligations.

The Director, Information Resources Management Service publishes this notice containing proposed information collection requests prior to the submission of these requests to OMB. Each proposed information collection, grouped by office, contains the following: (1) Type of review requested, e.g., new, revision, extension, existing or reinstatement; (2) Title; (3) Agency form number (if any); (4) Frequency of the collection; (5) The affected public; (6) Reporting burden; and/or (7) Recordkeeping burden; and (8) Abstract. OMB invites public comment at the address specified above. Copies of the requests are available from Margaret Webster at the address specified above.

Dated: July 3, 1986.

George P. Sotos,

Director, Information Resources Management Service.

Office of Postsecondary Education

Type of Review: Reinstatement
Title: Application for Grants Under the Endowment Grant Program
Agency Form Number: E40-20P
Frequency: Annually
Affected Public: Institutions of Higher Education
Reporting Burden:
Responses: 1000
Burden Hours: 4000
Recordkeeping Burden:
Recordkeepers: 0
Burden Hours: 0

Abstract: This application collects data from institutions of higher education applying for competively awarded grant funds under the Endowment Grant Program Title III of the Higher Education Act of 1965, as amended.

Type of Review: Reinstatement
Title: Application for Designation as an Eligible Institution under Title III Higher Education Act of 1965, as amended
Agency Form Number: 1049-6
Frequency: Annually
Affected Public:
Non-profit institutions
Responses: 1600
Burden Hours: 1600
Recordkeeping Burden:
Recordkeepers: 0
Burden Hours: 0

Abstract: The Division of Institutional Development will use the information requested to determine if an institution of higher education meets the specific program qualifications to receive Title III funds as provided for in the legislation and regulations governing the Institutional Aid Programs.

Office of Special Education and Rehabilitative Services

Type of Review: Revision
Title: Performance Report for Training Personnel for the Eudcation of the Handicapped Program
Agency Form Number: B20-8P
Frequency: Annually
Affected Public: State or local governments
Reporting Burden:
Responses: 885
Burden Hours: 885
Recordkeeping Burden:
Recordkeepers: 0
Burden Hours: 0

Abstract: The Performance Report must be completed annually by all grantees receiving funds under section 634 of the Education of the Handicapped Act. In addition to being summarized and included in the Annual Report to Congress, the information will be used to assist Departmental decision makers in establishing program priorities.

[FR Doc. 86-15437 Filed 7-8-86; 8:45 am]

BILLING CODE 4000-01-M

DEPARTMENT OF ENERGY

Cases Filed With the Office of Hearings and Appeals; Week of May 9 Through May 16, 1986

During the week of May 9, through May 16, 1986, the appeals and applications for exception or other relief listed in the Appendix to this Notice were filed with the Office of Hearings and Appeals of the Department of Energy. A submission inadvertently omitted from an earlier list has also been included.

Under DOE procedural regulations, 10 CFR Part 205, any person who will be aggrieved by the DOE action sought in these cases may file written comments on the application within ten days of service of notice, as prescribed in the procedural regulations. For purposes of the regulations, the date of service of Notice is deemed to be the date of publication of this Notice or the date of receipt by an aggrieved person of actual Notice, whichever occurs first. All such comments shall be filed with the Office of Hearings and Appeals, Department of Energy, Washington, DC 20585.

July 2, 1986.

George B. Breznay,

Director, Office of Hearings and Appeals.

LIST OF CASES RECEIVED BY THE OFFICE OF HEARINGS AND APPEALS

[Week of May 9 through May 16, 1986]

Date	Name and location of applicant	Case No.	Type of submission
Apr. 21, 1986	Standard Oil Co. (Indiana)/Indiana and Pennzoil/Indiana, Indianapolis, IN.	RM21-25	Request for Modification/Rescission in Second Stage Refund Proceeding. If granted: The November 5, 1985, Decision and Order (Case Nos. RQ21-221 and RQ10-224) issued to Indiana would be modified regarding the state's application for a second stage refund submitted in the Amoco and Pennzoil refund proceedings.
May 12, 1986	The Bakersfield Californian, Bakersfield, CA	KFA-0033	Appeal of a Freedom of Information Request Denial. If granted: The March 31, 1986, Freedom of Information Request Denial issued by the Office of Naval Petroleum Reserves in California would be rescinded and The Bakersfield Californian would receive access to the entire report entitled "Investigation Report on the Explosion and Fire at the 35R Sump, August 25, 1985 Naval Petroleum Reserve No. 1, Elk Hills, October, 1985."
Do.	Fitterer Oil Company, New England, ND	KEE-0041	Exception to the Reporting Requirements. If granted: Fitterer Oil Company would no longer be required to file form EIA-782B "Resellers/Retailers' Petroleum Product Sales Report."
Do.	G.R. Baldwin, Inc., Winnsboro, LA	KEE-0042	Exception to the Reporting Requirements. If granted: G.R. Baldwin, Inc. would no longer be required to file certain EIA reporting forms.
May 13, 1986	Economic Regulatory Administration, Denver, CO	KRD-0017	Motion for Discovery. If granted: Discovery would be granted to the Economic Regulatory Administration in connection with the Statement of Objections submitted by Great Eastern Energy and Development Corporation in response to the Proposed Remedial Order (Case No. HRO-0237) issued to the firm.
Do.	Energy Reserve Group, Washington, DC	KEF-0037	Implementation of Special Refund Procedures. If granted: The Office of Hearings and Appeals would implement Special Refund procedures pursuant to 10 CFR, Part 205, Subpart V, in connection with the August 30, 1985, Decision and Order issued by the Office of Hearings and Appeals (Case No. HRR-0112) to Energy Reserves Group.
Do.	Reserve Petroleum Company, Pittsburgh, PA	KEE-0043	Exception to the Reporting Requirements. If granted: Reserve Petroleum Company would no longer be required to file form EIA-194 "Monthly Alternative Fuel/Incremental Price Monitoring Report."
May 14, 1986	Millicent G. Dillon, San Francisco, CA	KFA-0034	Appeal of an Information Request Denial. If granted: The April 13, 1986, Freedom of Information Request Denial issued by the Michael B. Seaton would be rescinded and the Millicent Dillon would receive access to the entire copy of the September 22, 1949 letter from Francis Hammack, AEC to J. Edgar Hoover.

LIST OF CASES RECEIVED BY THE OFFICE OF HEARINGS AND APPEALS—Continued

[Week of May 9 through May 16, 1986]

Date	Name and location of applicant	Case No.	Type of submission
May 15, 1986	Cummings Transfer Company, Albany, OR	KEE-0044	Exception to the Reporting Requirements. If granted: Cummings Transfer Company would no longer be required to file form EIA-782B "Resellers/Retailers' Monthly Petroleum Product Sales Report" and form EIA-194 "Monthly Alternative Fuel/Incremental Price Monitoring Report."
Do.	Manuel J. Blanco, San Francisco, CA	KFA-0035	Appeal of an Information Request Denial. If granted: The April 15, 1986 Freedom of Information Request Denial issued by the Energy Information Administration would be rescinded and Manual J. Blanco would receive access to complete copies of form EIA-63, Page 5, "Photovoltaic Collector Data" for each of the respondents in the year 1984.
Do.	Port Petroleum, Inc., Washington, DC	KRD-0150	Motion for Discovery. If granted: Discovery would be granted to Port Petroleum Inc. in connection with the Statement of Objections submitted in response to the Proposed Remedial Order (Case No. KRO-0150) issued to Port Petroleum, Inc.
Do.	Etheridge Oil Company, Kenly, NC	KEE-0046	Exception to the Reporting Requirements. If granted: Etheridge Oil Company would no longer be required to file form EIA-782B "Resellers/Retailers' Monthly Petroleum Product Sales Report."

Date received	Name of refund proceeding/ name of refund applicant	Case No.
5/9/86	Beacon/Redwood Tree Service Station.	RF238-28
5/9/86	Beacon/Golden State Oil Company.	RF238-29
5/9/86	Beacon/Peter T. Hopper, Inc	RF238-30
5/9/86	Beacon/Don E. Keith	RF238-31
5/9/86	Beacon/The Customer Company.	RF238-32
5/9/86	Sigmor/Paul Investments, Inc	RF242-10
5/9/86	Sigmor/Havanna Materials Company.	RF242-11
5/9/86	Conoco/Chemical Leaman Tank Lines.	RF220-369
5/8/86	Eastern NJ/North Broad Manor	RF232-393
5/9/86	Earth/Coastal Corporation	RF239-14
5/9/86	Witco/McCormick and Sons Oil Co., Inc.	RF115-6
5/9/86	Belcher/Kieras Oil, Inc	RF227-48
5/12/86	Amoco/Minnkota Power Cooperative Inc.	RF21-12608
5/12/86	Amoco/Great Gas & Oil Company.	RF21-12609
5/12/86	Sid Richardson/Jones Gas Service.	RF26-36
5/15/86	Sid Richardson/Kruegels, Inc	RF26-35
5/12/86	Gulf/Gene's Gulf	RF40-3141
5/12/86	Gulf/Leroy's Gulf Service	RF40-3142
5/12/86	Guld/Holiday Gulf	RF40-3143
5/12/86	Gulf/SPAG's Gulf	RF40-3144
5/15/86	Gulf/Ken's Gulf	RF40-3145
5/15/86	Gulf/Cook Getwell Gulf	RF40-3146
5/14/86	LARCO/Small Gas & Oil Company.	RF112-190
5/12/86	LARCO/Towne Pump Stations	RF112-191
5/2/86	Arkansas Louisiana/Medlock Produce Company.	RF154-27
5/15/86	Eastern/Alvin Jess	RF215-10
5/12/86	Eastern/Anthony J. Dougherty	RF215-11
5/12/86	Eastern/Arundel Nursey	RF215-12
5/12/86	Eastern NJ/Bernsol Realty Company.	RF232-394
5/12/86	Eastern NJ/Lincoln Technical Institute.	RF232-395
5/12/86	Eastern/NJ Danco Manufacturing Co.	RF232-396
5/12/86	Eastern/NJ Sunny Towers, Inc	RF232-397
4/28/86	Eastern NJ/Chatham Ward Company.	RF232-398
5/15/86	Eastern NJ/Wilgrove Apts	RF232-399
5/12/86	Beacon/T.B. Dewar, Inc	RF238-33
5/12/86	Beacon/Seiberts' Oil Company, Inc.	RF238-34
5/15/86	Sigmor/Hibbs Trucking Company.	RF242-12
5/12/86	Conoco/Russell Petroleum Corp.	RF220-370
5/12/86	Conoco/Pellman Oil Company	RF220-371
5/12/86	Crystal/Thiokol Chemical Corporation.	RF233-36
5/2/86	Crystal/Chevron, USA	RF233-37
5/12/86	Beacon/A & S Service	RF238-35
5/12/86	Beacon/C. P. Phelps, Inc	RF238-36
5/12/86	Beacon/Beacon Madera	RF238-37
5/12/86	Beacon/Los Banos Truck Stop	RF238-38
5/12/86	Beacon/Pacheco Oil Co	RF238-39
5/12/86	Beacon/George H. Nunes	RF238-40
5/12/86	Beacon/Ocal Valentine	RF238-41
5/12/86	Beacon/Petroleum Transportation Co.	RF238-42
5/12/86	Beacon/Redwood Oil Co	RF238-43
5/12/85-5/16/86	Mobil Refund Applications	RF225-7993-RF225-8151

[FR Doc. 86-15404 Filed 7-8-86; 8:45 am]

BILLING CODE 6450-01-M

Issuance of Decisions and Orders by the Office of Hearings and Appeals; Week of June 2 Through June 6, 1986

During the week of June 2 through June 6, 1986, the decisions and orders summarized below were issued with respect to appeals and applications for exception or other relief filed with the Office of Hearings and Appeals of the Department of Energy. The following summary also contains a list of submissions that were dismissed by the Office of Hearings and Appeals.

Appeal

The Bakersfield Californian, 06/05/86, KFA-0029

The Bakersfield Californian filed an Appeal from a partial denial by the Director of the Naval Petroleum and Oil Shale Reserves of a request for information which the newspaper had submitted under the Freedom of Information Act (FOIA). In considering the Appeal, the DOE found that the Director had properly withheld material from a report concerning an explosion and fire at the Elk Hills Naval Petroleum Reserve. The DOE found that the material was deliberative and predecisional and therefore exempt from mandatory release pursuant to Exemption 5 of the FOIA, and further concluded that discretionary release of the contested material would not be in the public interest. Accordingly, the Appeal was denied.

Remedial Orders

Metropolitan Petroleum Compamy, Inc., Metropolitan Fuel Oil Company, 06/03/86, HRO-0037

Metropolitan Petroleum Company, Inc. and Metropolitan Fuel Oil Company objected to a Proposed Remedial Order issued to them by the Economic Regulatory Administration. After considering their objections, the DOE found that from March through July 1979 the firms charged prices in sales of motor gasoline in excess of those permitted pursuant to 10 CFR Part 212, Subpart F. The DOE therefore concluded that the proposed Remedial Order should be issued as a final Order and directed the firms to refund $173,239.09 plus interest to the DOE. The important issues discussed in the Decision and Order include (i) the procedural validity of the banking and nonproduct cost regulations, (ii) the calculation of the firms' banks of increased product costs, and (iii) the ERA's use of imputed May 15, 1973 prices in determining the firms' compliance with the pricing regulations.

Robison Energy, Inc., Jerry D. Robison, 06/02/86, HRO-0227

Robison Energy, Inc. and Jerry D. Robison (Robison) objected to a Proposed Remedial Order issued to them by the Economic Regulatory Administration. In the Proposed Remedial Order, the ERA found that during the period April 1980 through January 1981, Robison received illegal revenues by reselling crude oil at prices in excess of those permitted by the layering regulation, 10 CFR 212.186. In concluding that the Proposed Remedial Order should be issued as a final Order, the DOE found that Robison failed to show that it performed any economically valuable function in its transactions which would justify a markup. Accordingly, Robison was directed to remit $8,250,046.29 plus interest to the DOE to compensate for this violation.

Request for Exception

Exxon Junction Service; 06/04/86, KEE-0033

Exxon Junction Service filed an Application for Exception seeking relief from its obligation to submit Form EIA-782B, entitled "Resellers'/Retailers' Monthly Petroleum Product Sales Report." In considering Junction's request, the DOE found that the firm had not shown that it was uniquely and adversely affected by the time required to prepare the form or by the fact that it had been required to submit the form

for more than two years. Accordingly, the Application was denied.

Motion for Discovery

Eason Oil Company Economic Regulatory Administration, 06/03/86 HRD-0273 HRH-0273 HRD-0301

The Office of Hearings and Appeals issued a Decision and Order concerning three motions filed in connection with a Statement of Objections to a Proposed Remedial Order issued to Eason Oil Company in which the Economic Regulatory Administration alleged that the firm violated regulations applicable to sales of natural gas liquids and natural gas liquid products. The OHA denied as irrelevant Eason's request for discovery of information regarding (1) the ERA's audit of the firm, (2) contemporaneous construction and rulemaking material pertaining to pricing regulations applicable to natural gas plant operations, and (3) the agency's enforcement of the equal application rule and the prenotification requirement. The firm filed a "contingent" Motion for Evidentiary Hearing, requesting that it be allowed to defer its evidentiary hearing motion until the discovery process was complete. However, since the OHA denied Eason's discovery requests and the firms's evidentiary hearing request also failed to satisfy regulatory requirements, the OHA denied the "contingent" Motion. The OHA granted in part a Motion for Discovery filed by the ERA, requesting copies of company records supportings Eason's claims that the ERA had not permitted the firm to pass through all increased interest costs and othe nonproduct costs. OHA found that Eason had not adequately supported these claims and that the information requested by the ERA was clearly relevant to the proceeding.

Implementation of Special Refund Procedures

Dalco Petroleum, Inc., 06/04/86 HEF-0060

The DOE issued a Decision and Order establishing procedures for the distribution of $317,587 plus accured interest, received pursuant to a 1981 consent order entered into by the DOE and Dalco Petroleum, Inc., a propane reseller. In the Decision, the DOE determined that the Dalco settlement fund should be distributed to those Dalco propane customers which, according to a DOE audit of Dalco's records, were allegedly overcharged by Dalco. Any firms which purchased propane from Dalco or its affiliates, Hydrocarbons, Inc. or Porter Investment Co., during the period from November 1, 1973 through March 31, 1974, may file claims for a portion of the consent order fund. The Decision sets forth presumptions that will be applied in analyzing refund applications and specifies information that refund applications must include.

Dorchester Gas Corporation, 06/03/86, HEF-0559

The DOE issued a Decision and Order setting forth the procedures it will use to distribute $3,800,000 which it received prursuant to a consent order with Dorchester Gas Corporation, a gas plant operator. That consent order settled all non-crude oil DOE claims against Dorchester for the period August 18, 1973 through January 31, 1976. The DOE determined that settlement funds will be available to customers who were injured as a result of their purchases of covered products from Dorchester. The Decision sets forth presumptions that will be applied in analyzing refund applications and specifies information that refund applications must include.

Missouri Terminal Oil Company, 06/02/86, HEF-0131

The DOE issued a Decision and Order implementing a plan for the distribution of $40,000 received pursuant to a consent order entered into by Missouri Terminal Oil Company (MTO) and the DOE. The DOE determined that the consent order fund should be distributed to customers that purchased MTO motor gasoline during the period March 1, 1979 through July 31, 1979. The specific information to be included in Applications for Refund and presumptions that will be used in analyzing applications are set forth in the decision.

Propane Gas and Applicable Company, 06/03/86, HEF-0156

The DOE issued a Decision and Order implementing a plan for the distribution of $56,217.18 received by the DOE in connection with a remedial order issued to Propane Gas and Appliance Company (PGA). The DOE determined that the fund should be distributed to customers that purchased PGA propane during the period November 1, 1973 through March 31, 1974. The specific information to be included in Applications for Refund and presumptons that will be used in analyzing applications are set forth in the Decision.

Refund Applications

Eddy Refining Company and Key Oil Company/Power Pak Company, Inc., 06/02/85, RF145-3

The DOE issued a Decision and Order concerning an Application for Refund filed by Power Pak Company in connection with a consent order fund made available by Eddy Refining Company and Key Oil Company. Power Pak, a reseller of refined petroleum products indicated that it has purchased motor gasoline directly from Eddy and Key during the consent order period and requested a refund below the $5,000 small claims threshold. The DOE concluded that Power Pak should receive a refund of $1,576 in principal and $208 in interest.

Ensearch Corporation/Warren Petroleum Company E. I. Du Pont de Nemours & Company, 06/04/86 RF58-1, RF58-2

Warren Petroleum Company filed an Application for Refund, seeking a portion of funds remitted pursuant to a consent order that Ensearch Corporation entered into with the DOE. The DOE found no evidence that Warren was unable to pass through the alleged overcharges associated with its purchases of natural gas liquid products (NGLPs) from Ensearch and its application was therefore denied. In granting a refund application filed by E. I. du Pont de Nemours & Company, the DOE found that du Pont made indirect purchases of NGLPs from Ensearch, by virtue of its direct purchases of NGLPs from Warren. Since du Pont used the products in petrochemical production processes which were not subject to the DOE regulation, the firm was not required to provide a detailed showing of injury. The total refund granted including interest was $72,432 ($46,472.19 in principal and $25,959.81 in interest).

Glaser Gas, Inc./Kiowa Store, 06/03/86, RF174-4

The DOE issued a Decision and Order concerning an Application for Refund filed by Kiowa Store in connection with a consent order fund made available by Glaser Gas, Inc. Kiowa Store, a reseller of propane, certified that it purchased propane from Glaser during the consent order period and requested a refund not exceeding the $5,000 small claims threshold. In accordance with the procedures adopted in the Glaser Special Refund Proceeding, the DOE granted Kiowa Store a refund based on a prorated portion of the alleged Glaser overcharges. The total refund amount approved in this Decision is $7,868 ($5,000 principal plus $2,868 interest).

Gulf Oil Corporation/Anthony Galioto, et al., 06/02/86, RF40-20, et al.

The DOE issued a Decision and Order concerning Applications for Refund filed by 44 end-users of petroleum products in connection with a consent order fund made available by Gulf Oil Corporation. Each claimant provided documentation from which estimates could be derived of its purchases of Gulf products during the consent order period. In accordance with the procedures adopted in the Gulf Special Refund Proceeding, the DOE granted each claimant a refund based on the estimated volumes of Gulf products it purchased during the consent order period. The total amount of refunds approved in this Decision is $838 ($700 principal plus $138 interest).

Gulf Oil Corporation/Johnson's Gulf Service Station, et al., 06/05/86, RF40-02206, et al.

The DOE issued a Decision and Order concerning 46 Applications for Refund filed by retailers of Gulf Oil Corporation petroleum products. Each firm applied for refund based on the procedures outlined in *Gulf Oil Crop.*, 12 DOE ¶ 85,048 (1984), governing the disbursement of settlement funds received from Gulf pursuant to a 1978 consent order. In accordance with those procedures, each applicant demonstrated that it would not have been required to pass through to its customers a cost reduction equal to the refund claimed. After examining the applications DOE concluded that the firms should receive a total refund of $61,243, consisting of $51,175 in principal and $10,068 in interest).

Gulf Oil Corporation/Kieras Oil, Inc., 06/03/86, RF40-3147

The DOE issued a Decision and Order concerning 46 Applications for Refund filed by Kieras Oil Inc., a retailer of Gulf petroleum products. The claimant applied for a refund based on the procedures outlined in *Gulf Oil Corp.*, 12 DOE ¶ 85,048 (1984). In accordance with these procedures, Kieras demonstrated that it would not have been required to pass through to its customers a cost reduction equal to the refund claimed.

The DOE concluded that the claimant should receive a total of $4,564 ($3,814 principal plus $750 interest) based upon a total volume of 3,126,351 gallons of Gulf product purchases.

Gulf Oil Corporation/S.T. Wooten Construction Co., Baldwin County Board of Education, 06/05/86, RF40-2685, RF40-2713

The DOE issued a Decision and Order concerning Applications for Refund filed by S.T. Wooten Construction Company and Baldwin County Board of Education in connection with a consent order fund made available by Gulf Oil Corporation. Each claimant was an end-user of petroleum products, and provided documentation of its purchase volumes of Gulf products during the consent order period. In accordance with the procedures set forth in the Gulf Special Refund Proceeding, the DOE granted each claimant a refund based on the volumes of Gulf products it purchased during the consent order period. The total amount of refunds approved in this Decision is $1,534 ($1,282 principal plus $252 interest).

Gulf Oil Corporation/Southside Gulf, et al., 06/05/86, RF40-02311, et al.

The DOE issued a Decision and Order concerning eight Applications for Refund filed by retailers of Gulf Oil Corporation petroleum products. Each firm applied for a refund based on the procedures outlined in *Gulf Oil Corp.*, 12 DOE ¶ 85,048 (1984), governing the disbursement of settlement funds received from Gulf pursuant to a 1978 consent order. In accordance with those procedures, each applicant demonstrated that it would not have been required to pass through to customers a cost reduction equal to the refund claimed. After examining the applications, the DOE concluded that the firms should receive a total refund of $14,998, consisting of $12,531 in principal and $2,467 in interest.

Gulf Oil Corporation/William P. Filmer, et al., 06/06/86, RF40-539, et al.

The DOE issued a Decision and Order concerning Applications for Refund filed by four end-users of petroleum products in connection with consent order fund made available by Gulf Oil Corporation. Each claimant provided documentation of its purchase volumes of Gulf products during the consent order period. In accordance with the procedures set forth in the Gulf Special Refund Proceeding, the DOE granted each claimant a refund based on the volumes of Gulf products it purchased during the consent order period. The total amount of refunds approved in this Decision is $266 ($221 principal plus $45 interest).

Inland U.S.A., Inc./Site Oil Company, Flash Oil Corporation, 06/05/86, RF176-9, RF176-10.

The DOE issued a Decision and Order concerning Applications for Refund filed by Site Oil Company and Flash Oil Corporation in connection with a consent order fund made available by Inland U.S.A., Inc. Each claimant, a reseller of motor gasoline, provided documentation of its purchase volumes of Inland motor gasoline but did not make a sufficient showing that it absorbed the alleged Inland overcharges. Accordingly, the DOE granted each firm a refund based on the $5,000 small claims threshold amount. The total amount of refunds approved in this Decision is $14,750 ($10,000 principal plus $4,750 interest).

Little America Refining Company/Towne Pump Stations, 06/02/86, RF112-191.

The DOE issued a supplemental Decision and Order granting an additional refund from the Little America Refining Company consent order fund to Towne Pump Stations, a retailer of motor gasoline. Based on documentation establishing that Towne Pump purchased additional volumes of motor gasoline, the DOE determined that the firm was eligible for a supplemental refund. Since Towne Pump's total claim did not exceed the $5,000 small claims threshold, the DOE did not require the firm to submit a detailed showing of injury. Towne Pump's additional refund amounts to $3,611 in principal and $1,836 in interest.

Little America Refining Company/Triangle Oil Company, 06/03/86, RF112-50.

The DOE issued a Decision and Order concerning an Application for Refund filed by Triangle Oil Company in connection with a consent order fund made available by Little America Refining Company (Larco). Triangle sought a refund of $19,941, its volumetric share of the Larco consent order funds. In considering the application, the DOE determined that Triangle was unable to demonstrate whether it had banks of unrecouped increased product costs throughout the consent order period. Therefore, the DOE found it appropriate to limit Triangle's refund to the $5,000 small claims threshold. Accordingly, Triangle was granted a refund of $5,000 in principal and $2,541 in interest.

Little America Refining Company/Westland Distributing Company, Inc., 06/02/86, RF112-51.

The DOE issued a Decision and Order granting a refund from the Little America Refining Company (Larco) consent order fund to Westland Distributing Company, Inc., a reseller of Larco petroleum products. Although now a wholly-owned subsidiary of another Larco refund applicant, Westland was an independent firm at the time of its purchases from Larco. The DOE therefore determined that Westland was eligible to receive a refund. Since its refund claim did not exceed $5,000, the DOE did not require Westland to submit a detailed showing of injury. The refund granted Westland totals $3,418, representing $2,266 in principal and $1,152 in interest.

National Helium Corporation/New York, Pennzoil Company/New York, Coline Gasoline Corporation/New York, Perry Gas Processors, Inc./New York, 06/06/86, RQ3-281, RQ10-282, RQ2-283, RQ183-290

The DOE issued a Decision approving in part the second-stage refund plan submitted by the State of New York for use of $751,071, a portion of the funds available to the State from the National Helium Corporation, Pennzoil Company, Coline Gasoline Corporation, and Perry Gas Processors, Inc. escrow accounts. The DOE approved New York's plans to use the funds to provide homeowners and multi-family building owners with assistance for implementing energy conservation measures, provide workshops on energy conservation topics and other training and educational programs for its citizens. The DOE rejected the State's proposal to use part of the funds in a program to help reduce fuel consumption in school district and municipal motor vehicle fleets, but approved this program for private fleets. Finally, the DOE indicated that the State's Pennzoil funds would not be released until pending related litigation was resolved. Accordingly, the refund application was partially granted. The total funds including interest approved for distribution in this proceeding are $746,059.

Quaker State Oil Refining Corporation/Central Electric Cooperative et al., 06/03/86, RF213-004, et al.

The DOE issued a Decision and Order concerning 29 Applications for Refund filed by end-users of Quaker State Oil Refining Corporation refined petroleum products. Each applicant presented evidence that it purchased refined petroleum products from Quaker State during the consent order period. The DOE determined that, as an end-user, each applicant would be presumed to have been injured by its Quaker State purchases and would receive a refund from the Quaker State consent order fund based on the volume of its purchases times the volumetric refund amount. The refunds approved totaled $38,472, including interest.

Quaker State Oil Refining Corporation/Lilly & Rudolph Service Station, et al., 06/03/86, RF213-001, et al.

The DOE issued a Decision and Order concerning 86 Applications for Refund filed by resellers of Quaker State Oil Refining Corporation refined petroleum products. Each applicant presented evidence that it purchased refined petroleum products from Quaker State during the consent order period and requested a refund at or below the $5,000 small claims threshold level. The DOE determined that each applicant should receive a refund from the Quaker State consent order fund based on the volume of its purchases times the volumetric refund amount. The refunds approved totaled $229,758, including interest.

Saber Energy, Inc./ U.S. Oil Company, 06/02/86, RF192-3.

The DOE issued a Decision concerning an Applications for Refund filed by U.S. Oil Company from a consent order fund made available by Saber Energy, Inc. Since the applicant was a reseller of motor gasoline, and made only a single purchase from Saber, it was required to rebut a presumption that, as a spot purchaser, it was not injured by Saber's alleged overcharges.The DOE found that U.S. Oil demonstrated that it purchased the Saber gasoline in order to resell it to its base period customers, and that it sold the product at a loss. Accordingly, the DOE concluded that U.S. Oil was eligible to receive the full volumetric refund amount for its purchase. The total amount of its refund was $5,207, including interest.

Tenneco Oil Company/Georgia Power Company, Mississippi Power Company, 06/02/86, RF7-132, RF7-133

The DOE issued a Decision and Order concerning Applications for Refund filed by two regulated public utilities, Georgia Power Company and Mississippi Power Company, in connection with a consent order fund made available by Tenneco Oil Company. Each claimant provided documentation of its purchase volumes of Tenneco No. 2 oil and certified that it will pass any refund through to its customers. Refunds were based on the volumes of Tenneco No. 2 oil purchased by the claimant during the consent order period, and total $81,308 ($10,965 principal, plus $7,343 interest).

Tiger Oil Company/Reesman's Dairy, 06/04/86, RF196-0002

Reesman's Dairy filed an Application for Refund seeking a portion of the $4,000 obtained by the DOE through a Consent Order with Tiger Oil Company. Reesman's Dairy was identified as one of four firms that allegedly did not receive Tiger product to which they were entitled under the allocation regulations. Reesman's did not demonstrate that it suffered a disproportionate injury as a result of Tiger's alleged misallocations, and accordingly was granted a refund of one-fourth of the consent order fund, or $1,000 principal, plus $609 interest.

Dismissals

The following submissions were dismissed:

Name and Case No.

Adbro, Inc., RF225-2069
Akira Sakamoto, RF225-2203, RF225-2204, RF225-2205
Alliance Machine Co., RF225-2139
American Nickel, Alloy Mfg., Co., RF225-2131
Ametek, RF225-2217, RF225-2218
Apex Tool Cutter Co., RF225-2127
Arkay Packaging Corp., RF225-2138
Anchor Fasteners Division, RF225-2093
Athea Laboratories, RF225-2348
Belmont Metals Inc., RF225-1459
Bemis Associates, Inc., RF225-2277, RF225-2278
Big Valley Plastics, Inc., RF225-2307
Bosak Motor Sales, Inc., RF225-1462
Burron Medical Inc., RF225-2621
C.S. Ehinger, RF225-2298
C&G Wheel Puller Co., RF225-2622
Calcor Space Facility, Inc., RF225-2180, RF225-2181
Cambridge Tool & Mfg. Co., RF225-2295
Cameo Container Corp., RF225-1629
Carnation Dairies, RF225-2616
Centex Cement Corp., RF225-1466
Children's Farm Home, RF225-2060
City of Farmington, RF225-2141, RF225-2142
Coleman Taylor Transmissions, RF225-2094
Columbia Helicopters, Inc., RF225-2078
Columbia Tanning Corp., RF225-2343
Combustion Engineering, Inc., RF225-1630
Consolidated Litho, RF225-2091
Cooper Group, RF225-2135
Cresthill Industries, Inc., RF225-1632
Crucible Materials Corp., RF225-2063
Davis-Lynch, Inc., RF225-2617
Davis Ranch, RF225-1562
Davis Rubber Company, RF225-1600, RF225-1601
Diefendorf Gear Corp., RF225-1468
Diesel Recon Co., RF225-2088
Discount Oil Corp., KEE-0039
Dowell Schlumberger, Inc., RF225-2168, RF225-2169, RF225-2170
Duo-Fast Corporation, RF225-2120
E.W. Brown, RF225-2134
Eastern Associated Terminals Inc., RF225-1627
Ederer Inc., RF225-2073
Edwin A. Link Field Broome Cty. Airport, RF225-2629
Emmco Development Corp., RF225-2053
Fitterer Oil Co., Inc., KEE-0041
Flexan Corporation, RF225-2126
Florida Screw Mfg. Co., RF225-1460
Frady Construction Co., RF225-2149, RF225-2150
G.R. Baldwin, Inc., KEE-0042
General Fire Extinguisher Corp., RF225-2054
Gloucester Marine Railways Corp., RF225-5553
Government Accountability Project, KFA-0037
Grind-Rite Grinding & MFG. Co., RF225-826
The Herald, KFA-0036
Heritage Bag Co., RF225-2626
Hirsh Company, RF225-2119
Huck Manufacturing Co., RF225-2333
Jack Ritter, Inc., RF140-39
Jefferson Printing Co., RF225-1471
Johnson & Hoffman Mfg., Corp., RF225-1631
Kaiser Electroprecision, RF225-2074
Kings Electronics Co., Inc., RF225-1551
Las Vegas Valley Water District, RF225-2132
Lawrence Public Schools, RF225-2137
Lock's, Inc., RF225-2123
Lombardi Chevy-Buick, Inc., RF225-2239, RF225-2240
Macmillan Bloedel Containers, RF225-2624
Mahnomen County & Village Hospital & Nursing Center, RF225-932, RF225-933
Major Electronics, Inc., RF225-2076
Manhattan Wire Goods Co., Inc., RF225-1623
Manufacturers Steel Supply Co., Inc., RF225-1469
Maxtek-Midwest Machine & Tool Co., RF225-2628
McKinney Steel Inc., RF225-2627
Michaels of Oregon, RF225-2357
Mold-Ex Rubber Co., Inc., RF225-2072
Monsanto Company, RF225-1633
Multimatic Products, Inc., RF225-1558
National Gear Products, Inc., RF225-2630
National Sandblasting Co., Inc., RF225-2075
New Market Hardware Co., RF225-2290
Norandal USA, Inc., RF225-2136
North Shore Country Club, RF225-2275
Oregon Metal Slitters, Inc., RF225-2056
Osborn Mfg., RF225-2092
Overland Fuel & Contracting Company, RF225-2334
Pearl Container Co., RF225-2347
Pengo Corporation, RF225-2182, RF225-2183
Petitte Auto Repair, RF213-111
Petroleum Supply, Inc., HRO-0293, HRH-0297, HRD-0297
Polk County Highway Department, RF225-916, RF225-917
Precise Plastic Products, Inc., RF225-2184, RF225-2185, RF225-2186
Princeton Polychrome, RF225-2125
Rainier Precision, Inc., RF225-2310
Rheeme Mfg. Co., RF225-1628
Rixson-Firemark Division, RF225-2089
RMR Corp., RF225-2090
Robert Alder & Sons, Inc., RF225-993, RF225-994, RF225-995
Robroy Industries, Inc., RF225-831
Rose Motor Sales, Inc., RF225-2925, RF225-2926
Saco School Department, RF225-839
San Val Grinding Co., RF225-2058
Scovill, RF225-1029, RF225-1030
Service Ice Co., Inc., RF225-2615
Setco Industries, Inc., RF225-2061
Shelby's, RF213-118
Sinclair Printing Co., RF225-2143, RF225-2144
Sioux Tools Inc., RF225-1563
Southard Oil, *et al.*, KQR-0010, RF21-12612, RF21-12613
Southern Tier Plastics, Inc., RF225-2623
Stanley Hydraulic Tools, RF225-2128
Stanley Industries, Inc., RF225-1622
Stanley-Proto Industrial Tools, RF225-2077
Stanley Steel, RF225-1463
Stelbar Oil Corp., Inc., RF225-2158, RF225-2159
Sterling China Co., RF225-2085
Sterling Engineering Corp., RF225-1456
Storms Forge, RF225-2133
Superior Dairies, Inc., RF225-2064
Synthane Taylor Corp., RF225-793
Syracuse Herald-Journal, RF225-2121
Texas Parks & Wildlife Department, RF225-2129
Towne Robinson Fastener Co., RF225-2066
Tri-Plas, Incorporated, RF225-2163, RF225-2164
Tru-Fit Products Corp., RF225-1567
TT Enterprises, RF213-7
Union Electric Co., RF21-12611
Velvet Ice Cream, RF225-2087
Virchow E. Ridings, RF225-2296
W.H. Salisbury & Co., RF225-2062
Walker Heat Treating, Inc., RF225-2321
Wallace Barnes Steel, RF225-2059
Waterbury Municipal Office, RF225-2052
Wavaho Oil Co., Inc., KEE-0049
Way Engineering Co., Inc., RF225-2086
Weld Tooling Corporation, RF225-2619
West End Lumber Co., RF225-2227, RF225-2228
Western Forms, Inc., RF225-2620
Western Textile Products, RF225-2065
Wilson Injection Molding Company, Inc., RF225-1553
Winsted Precision Ball, RF225-2289
Wisconsin Centrifugal Inc., RF225-2081
Yarema Die & Engineering, RF225-851

Copies of the full text of these decisions and orders are available in the Public Reference Room of the Office of Hearings and Appeals, Room 1E-234, Forrestal Building, 1000 Independence Avenue, SW., Washington, DC 20585, Monday through Friday, between the hours of 1:00 p.m. and 5:00 p.m., except federal holidays. They are also available in *Energy Management: Federal Energy Guidelines*, a commercially published loose leaf reporter system.

George B. Breznay,

Director, Office of Hearings and Appeals.

July 2, 1986.

[FR Doc. 86-15405 Filed 7-8-86; 8:45 am]

BILLING CODE 6450-01-M

ENVIRONMENTAL PROTECTION AGENCY

[PF-460; FRL-3044-9]

Tolerance Petitions for Certain Pesticide Chemicals; Mobay Chemical Corp. et al.

AGENCY: Environmental Protection Agency.

ACTION: Notice.

SUMMARY: The EPA has received petitions requesting that the Agency propose the establishment of tolerances for residues of certain pesticide chemicals in or on certain raw agricultural commodities. The proposed tolerances set maximum permissible levels of residues for the pesticide in raw agricultural commodities.

ADDRESS: By mail, submit written comments to:

Program Management and Support Division (TS-767C), Attn: Product Manager (21), Office of Pesticide Programs, Environmental Protection Agency, 401 M St., SW., Washington, D.C. 20460.

In person, deliver comments to: Rm 227, CM #2, 1921 Jefferson Davis Highway, Arlington, VA 22202.

Written comments should be identified by the document control number (PF-460) and the applicable petition number. Written comments filed in response to this notice will be available for public inspection in the Program Management and Support Division office at the address provided above from 8 a.m. to 4 p.m., Monday through Friday, except legal holidays.

FOR FURTHER INFORMATION CONTACT:

By mail: Henry M. Jacoby, Product Manager (PM) 21, Registration Division (TS-767C), Office of Pesticide Programs, 401 M St., SW., Washington, D.C. 20460.

Office location and telephone number: Rm. 229, CM #2, 1921 Jefferson Davis Highway, Arlington, VA (703-557-1900).

SUPPLEMENTARY INFORMATION: The EPA received the following pesticide petitions (PP) requesting that the Agency propose the amendment of regulations on residues of pesticide chemicals in or certain raw agricultural commodities in accordance with the Federal Food, Drug, and Cosmetic Act.

1. *PP 6F3419.* Mobay Chemical Corp., PO Box 4913, Hawthorne Road, Kansas City, MO 64120-0013. Proposed amending 40 CFR 180.410 by establishing tolerances for the combined residues of the fungicide 1-(4-chloro-phenoxy)-3,3-dimethyl-1-(1*H*-1,2,4-triazol-1-y1)-2-butanone and its metabolites containing the chlorophenoxy and triazole moieties (expressed as the fungicide) in or on the following raw agricultural commodities:

Commodities	Parts per million (ppm)
Corn fodder, dry	0.05
Corn forage, green	0.1
Corn kernel plus cob with husk removed	0.1
Corn kernel, dry	0.01
Cotton forage	0.5
Cottonseed	0.02
Legume vegetable group seed, succulent (including pods) and dry	0.05
Legume vegetable group foliage, vines (green)	1.0
Legume vegetable group hay	0.1
Lettuce	0.01
Peanut hulls	0.01
Peanuts (meats)	0.01
Peanut vines (dry	0.01
Potatoes	0.05
Sorghum fodder	0.1
Sorghum forage	0.1
Sorghum grain	0.01

The proposed analytical method for determining residues is gas liquid chromatography.

2. *PP 4E3026.* EPA issued a notice, published in the **Federal Register** of February 27, 1984 (49 FR 7150), which announced that Ciba-Geigy Corp., P.O. Box 18300, Greensboro NC 27419 filed pesticide petition (PP) 4E3026, proposing to amend 40 CFR Part 180 by establishing a tolerance for the combined residues of the fungicide (1-[[2-(2,4-dichloro-phenyl)-4-propyl-1,3-dioxolan-2-yl]methyl]-1*H*-1,2,4-triazole and its metabolites determined as 2,4-dichlorobenzoic acid expressed as parent compound in on or the raw agricultural commodity bananas at 0.1 part per million (ppm).

Ciba-Geigy has amended the petition by increasing the proposed tolerance for bananas to 0.2 ppm.

The proposed analytical method for determining residues in gas liquid chromatography.

Authority: 21 U.S.C. 346a.

Dated: June 26, 1986.

James W. Akerman,

Acting Director, Registration Division, Office of Pesticide Programs.

[FR Doc. 86-15172 Filed 7-8-86; 8:45 am]

BILLING CODE 6560-50-M

[OPP-50659; FRL-3043-1]

Issuance of Experimental Use Permits

AGENCY: Environmental Protection Agency (EPA).

ACTION: Notice.

SUMMARY: EPA has granted experimental use permits to the following applicants. These permits are in accordance with, and subject to, the provisions of 40 CFR Part 172, which defines EPA procedures with respect to the use of pesticides for experimental purposes.

FOR FURTHER INFORMATION CONTACT: By mail, the product manager cited in each experimental use permit at the address below: Registration Division (TS-767C), office of Pesticide Programs, Environmental Protection Agency, 401 M St., SW., Washington, DC 20460.

In person or by telephone: Contact the product manager at the following address at the office location or telephone number cited in each experimental use permit: 1921 Jefferson Davis Highway, Arlington, VA.

SUPPLEMENTARY INFORMATION: EPA has issued the following experimental use permits:

9018-EUP-1. Renewal. Brea Agricultural Service, Inc., Drawer 1, Stockton, CA 95201. This experimental use permit allows the use of 9,400 pounds of the herbicide lactic acid on apples, beans, broccoli, cabbage, cauliflower, cherries, citrus, corn, grapes, peppers, prunes, strawberries, and tomatoes to evaluate plant regulator effects. A total of 2,050 acres are involved; the program is authorized only in the States of Arizona, California, Oregon, and Washington. The experimental use permit was previously affecting from October 11, 1984 to October 11, 1985. The permit is now effective from April 3, 1986 to April 3, 1987. A temporary exemption from the requirement of a tolerance for residues of the active ingredient in or on the above-named commodities has been established. (Robert Taylor, PM 25, Rm. 245, CM#2, (703-557-1800))

45639-EUP-30. Issuance. Nor-Am Chemical Company, 3509 Silverside Rd., Wilmington, DE 19803. This experimental use permit allows the use of 36.38 pounds of the insecticide amitraz on beef and dairy cattle to evaluate the control of Boophilus ticks. A total of 1,200 animals are involved; the program is authorized only in the State of Texas and the territory of Puerto Rico. The experimental use permit is effective from May 30, 1986 to May 30 1987. A permanent tolerance for residues of the active ingredient in or on beef and dairy cattle has been established (40 CFR 180.287). (Larry Schnaubelt, PM 12, Rm. 202 CM#2, (703-557-2386))

264-EUP-72. Extension. Union Carbide Agricultural Products Company, Inc., T.W. Alexander Drive, P.O. Box 12014, Research Triangle Park, NC 27709. This experimental use permit allows the use of 1,040 pounds of the plant regulator ethephon on popcorn to

evaluate the control of lodging. A total of 2,000 acres are involved; the program is authorized only in the States of Illinois, Indiana, Iowa, Kansas, Kentucky, Michigan, Minnesota, Missouri, Nebraska, Ohio, South Dakota, and Wisconsin. The experimental use permit is effective from May 23, 1986 to May 23, 1988. This permit is issued with the limitation that treated forage or stover are not fed to livestock. (Robert Taylor, PM 25, Rm. 245, CM#2, (703-557-1800))

Persons wishing to review these experimental use permit are referred to the designated product managers. Inquiries concerning these permits should be directed to the persons cited above. It is suggested that interested persons call before visiting the EPA office, so that the appropriate file may be made available for inspection purposes from 8:00 a.m. to 4:00 p.m., Monday through Friday, excluding legal holidays.

Authority: 7 U.S.C. 136c.

Dated: June 24, 1986.

James W. Akerman,

Acting Director, Registration Division, Office of Pesticide Programs.

[FR Doc. 86-15059 Filed 7-8-86; 8:45 am]

BILLING CODE 6560-50-M

[PP 4G2977/T514 and PP 4G2978/T515; FRL-3042-9]

E.I. du Pont de Nemours and Co.; Renewal of Temporary Tolerances

AGENCY: Environmental Protection Agency (EPA).

ACTION: Notice.

SUMMARY: EPA has renewed temporary tolerances for the combined residues of the herbicide DPX-Y6202 (ethyl 2[4-(6-chloro-quinoxalin-2-yl oxy) phenoxy] propanoate and its metabolite 2-[4-chloroquinoxalin-2-yl oxy) phenoxy] propionic acid in or on the raw agricultural commodities cotton and soybeans.

DATE: These temporary tolerances expire March 11, 1987.

FOR FURTHER INFORMATION CONTACT:

By mail: Robert Taylor, Product Manager (PM) 25, Registration Division (TS-767C), Office of Pesticide Programs, Environmental Protection Agency, 401 M St., SW., Washington, DC 20460.

Office location and telephone number: Rm. 245, CM#2, 1921 Jefferson Davis Highway, Arlington, VA, (703-557-1830).

SUPPLEMENTARY INFORMATION: EPA issued a notice, which was published in the **Federal Register** of June 29, 1984 (49 FR 26802), stating that a temporary tolerance had been established for the combined residues of the herbicide DPX-Y6202 (ethyl 2[4-(6-chloroquinoxalin-2-yl oxy) phenoxy] propanoate and its metabolite 2-[4-(6-chloroquinoxalin-2-yl oxy) phenoxy] propionic acid in or on the raw agricultural commodity cotton at 0.05 part per million (ppm). A temporary tolerance was also published in the **Federal Register** of June 29, 1984 (49 FR 26803) establishing a tolerance for the combined residues of the herbicide and its metabolite in or on the raw agricultural commodity soybeans at 0.05 ppm. These tolerances were renewed in response to pesticide petitions PP 4G2977 and PP 4G2978, submitted by E.I. du Pont de Nemours and Co., Agricultural Chemicals Dept., Walker's Mill, Barley Mill Plaza, Wilmington, DE 19898.

The Company has requested a 1-year renewal of the temporary tolerances for the combined residues of the herbicide and its metabolite to permit the continued marketing of the above raw agricultural commodities when treated in accordance with the provisions of experimental use permits 352-EUP-114 and 352-EUP-115, which are being renewed under the Federal Insecticide, Fungicide, and Rodenticide Act (FIFRA) as amended (Pub. L. 95-396, 92 Stat. 819; 7 U.S.C. 136).

The scientific data reported and other relevant material were evaluated, and it was determined that a renewal of the temporary tolerances will protect the public health. Therefore, the temporary tolerances have been renewed on the condition that the pesticide be used in accordance with the experimental use permits and with the following provisions:

1. The total amount of the active ingredient to be used must not exceed the quantity authorized by the experimental use permits.

2. E.I. du Pont de Nemours and Co. must immediately notify the EPA of any findings from the experimental use that have a bearing on safety. The company must also keep records of production, distribution, and performance and on request make the records available to any authorized officer or employee of the EPA or the Food and Drug Administration.

These tolerances expire March 11, 1987. Residues not in excess of this amount remaining in or on the above raw agricultural commodities after this expiration date will not be considered actionable if the pesticide is legally applied during the term of, and in accordance with, the provisions of the experimental use permits and temporary tolerances. These tolerances may be revoked if the experimental use permits are revoked or if any experience with or scientific data on this pesticide indicate that such revocation is necessary to protect the public health.

The Office of Management and Budget has exempted this notice from the requirements of section 3 of Executive Order 12291.

Pursuant to the requirements of the Regulatory Flexibility Act (Pub. L. 96-534, 94 Stat. 1164, 5 U.S.C. 601-612), the Administrator has determined that regulations establishing new tolerances or raising tolerance levels or establishing exemptions from tolerance requirements do not have a significant economic impact on a substantial number of small entities. A certification statement to this effect was published in the **Federal Register** of May 4, 1981 (46 FR 24950).

Authority: 21 U.S.C. 346a(j).

Dated: June 24, 1986.

James W. Akerman,

Acting Director, Registration Division, Office of Pesticide Programs.

[FR Doc. 86-15060 Filed 7-8-86; 8:45 am]

BILLING CODE 6560-50-M

[OPP-36126; FRL-3044-8]

Standard Evaluation Procedures; Availability of Draft Guidance Documents

AGENCY: Environmental Protection Agency (EPA).

ACTION: Notice of Availability; Request for Comments.

SUMMARY: The Environmental Protection Agency announces the availability of the following draft Standard Evaluation Procedures: Directions for Use; Magnitude of the Residue: Processed Food/Feed Studies; Product Chemistry; and Specialty Applications: (I) Classification of Seed Treatments and Treatment of Crops Grown for Seed Use Only as Non-Food or Food Uses, (II) Magnitude of the Residue: Post-Harvest Fumigation of Crops and Processed Foods and Feeds, (III) Magnitude of the Residue: Post-Harvest Treatment (Except Fumigation) of Crops and Processed Foods and Feeds. The Standard Evaluation Procedures (SEPs) are guidance documents which explain how the Hazard Evaluation Division (HED) of the Office of Pesticide Programs evaluates studies and scientific data to ensure consistency in scientific review of studies submitted by

registrants in support of pesticide registration. The SEPs increase the efficiency of pesticide registration and other regulatory activities, and help to maintain a high standard of scientific quality in regulatory decisions. Copies of the draft documents are available at the address given below.

DATE: Comments must be received on or before August 8, 1986.

ADDRESS: Submit three copies of written comments, identified with the document control number "OPP-36126," to:

Information Services Section, Program Management and Support Division (TS-757C), Office of Pesticide Programs, Environmental Protection Agency, 401 M St., SW., Washington, DC 20460.

In person, deliver comments to: Rm. 236, CM #2, 1921 Jefferson Davis Highway, Arlington, Virginia 22202.

Information submitted in any comment concerning this notice may be claimed confidential by marking any part or all of that information as "Confidential Business Information" (CBI). Information so marked will not be disclosed except in accordance with procedures set forth in 40 CFR Part 2. A copy of the comment that does not contain CBI must be submitted for inclusion in the public record. Information not marked confidential may be disclosed publicly by EPA without prior notice to the submitter. All written comments will be available for public inspection in Rm. 236 at the address given above, from 8 a.m. to 4 p.m., Monday through Friday, excluding legal holidays.

Copies of these draft Standard Evaluation Procedures are also available at this addresss.

FOR FURTHER INFORMATION CONTACT:

By mail: Stephen L. Johnson, Hazard Evaluation Division (TS-769C), Office of Pesticide Programs, Environmental Protection Agency, 401 M St., SW., Washington, DC 20460.

Office location and telephone number: Room 1121, Crystal Mall, Buildings #2, 1921 Jefferson Davis Highway, Arlington, Virginia 22202, (703-557-7695).

SUPPLEMENTARY INFORMATION: The Standard Evaluation Procedures are guidance documents which explain how HED evaluates studies and scientific data to ensure consistency and high quality in scientific review. In addition, the SEPs serve as valuable internal reference documents and training aids for new staff, and inform the public and regulated community of important considerations in the evaluation of test data for determining chemical hazards.

The SEPs help to ensure a comprehensive and consistent treatment of major scientific topics in EPA's science reviews and provide interpretive policy guidance where appropriate, but are not so detailed that they inhibit creativity and independent thought. Throughout the remainder of this and next fiscal year, HED will be writing additional SEPs on the scientific discipline of toxicology, chemistry, exposure assessment, and ecological effects. Twenty SEPs have been published thus far and are available from the National Technical Information Service, which is responsible for distribution of all SEPs after they have been finalized. Prior to publication, each of the SEPs must undergo extensive peer review including Division, Program Office, Intra-Agency, FIFRA Scientific Advisory Panel, and public comment. This announcement solicits public comment on the draft documents.

Dated: June 30, 1986.

John W. Melone,

Director, Hazard Evaluation Division.

[FR Doc. 86-15173 Filed 7-8-86; 8:45 am]

BILLING CODE 6560-50-M

[OW-10-FRL-3045-5]

Tentative Approval of Applications Submitted Under Section 301(m) of the Clean Water Act for Modified NPDES Permits

AGENCY: Environmental Protection Agency.

ACTION: Issuance of Tentative Decision Document, Draft Permits, and Fact Sheets; Solicitation of Public Comments.

SUMMARY: The United States Environmental Protection Agency (EPA) is today providing notice that it is tentatively approving the applications from Simpson Paper Company, Fairhaven, CA, and Louisiana-Pacific Corporation, Samoa, CA, for National Pollutant Discharge Elimination System (NPDES) permits modified in accordance with section 301(m) of the Clean Water Act (CWA) for discharges to the Pacific Ocean. EPA is issuing a tentative decision document, draft 301(m) permits, and fact sheets describing the permit conditions. EPA is making these documents available to the public and is soliciting public comments on its proposed actions. EPA will hold a public hearing to accept comments on its proposed actions. EPA is specifically soliciting comment from any facility in the United States that would be put at a competitive disadvantage as a result of the approval of these requests.

DATES: Comment Period—Interested persons may submit written comments on EPA's proposed actions to the address below. Comments must be received at the address below no later than October 10, 1986.

Public Hearing—The hearing officer designated by the Regional Administrator will conduct a public hearing to receive comments on EPA's proposed actions on September 24, 1986, at 1:30 pm and 7:30 pm in Eureka, CA, at the address below.

ADDRESSES: Public Comments—Send written comments on EPA's proposed actions to U.S. EPA Region 9 (ORC), Attn: Lorraine Pearson, Regional Hearing Clerk, 215 Fremont Street, San Francisco, CA 94105.

Public Hearing—EPA will conduct a public hearing on September 24, 1986, at 1:30 pm and 7:30 pm at The Eureka Inn, Colonnade Room, F and 7th Streets, Eureka, CA 95501.

State Concurrence—Send comments on the appropriateness of the State of California providing concurrence on EPA's tentative decision to approve the 301(m) applications to California State Water Resources Control Board, Executive Director, P.O. Box 100, Sacramento, CA 95801.

FOR FURTHER INFORMATION CONTACT: For further information on these actions or for copies of the tentative decision document, draft 301(m) permits, or the fact sheets, contact Doug Eberhardt, 301(m) Project Officer, U.S. EPA Region 9 (W-5-3), 215 Fremont Street, San Francisco, CA 94105; (415) 974-8269.

SUPPLEMENTARY INFORMATION:

Prior Actions

On January 8, 1983, President Reagan signed into law section 301(m) of the CWA which provides the opportunity for two pulp mills located on the Samoa Peninsula in California to apply to EPA for permits modified from nationally applicable Best Practicable Control Technology Currently Available (BPT) and Best Conventional Pollutant Control Technology (BCT) effluent limitations, and the requirements of section 403 of the CWA, for biochemical oxygen demand (BOD) and pH.

These two companies hold NPDES permits numbered CA0005894 and CA0005282. On September 26, 1983, the companies submitted applications to EPA for such modified permits. EPA has requested and received supplementary information from both applicants.

On December 14, 1984, the Regional Administrator, EPA Region 9, signed tentative decisions denying the 301(m) applications.

Notice of the tentative denial was provided on December 20, 1984 (49 FR

49501). EPA received additional information from the applicants and numerous requests from the public to reconsider the situation. On August 1, 1985, EPA withdrew its tentative decisions. Notice of the withdrawal was provided on August 12, 1985 (50 FR 32485).

Today's Action

EPA has reconsidered the applications in light of the mills' new proposals and is announcing today its tentative decision to approve the applications. After a public comment period, EPA will make a final decision on the applications. Copies of the tentative decision document, draft 301(m) permits, and fact sheets may be obtained from Doug Eberhardt at the address above. The administrative record supporting EPA's actions may be reviewed by contacting Doug Eberhardt.

On the basis of the data, references, and empirical evidence furnished in support of the application, and on the basis of the rest of the information contained in the administrative record, EPA has made the following tentative findings regarding compliance with the statutory criteria:

- The facilities for which modification is sought by Simpson Paper Company and Louisiana-Pacific Corporation were covered by NPDES Permit No. CA0005282 and CA0005894, respectively, at the time of enactment of section 301(m) (section 301(m)(1)(A));
- The applicants have demonstrated that the energy and environmental costs of meeting the BOD and pH requirements of sections 301(b)(1)(A) and 301(b)(2)(E) and of section 403 exceed by an unreasonable amount the benefits to be obtained, including the objectives of the CWA (section 301(m)(1)(B));
- The applicants have proposed programs to monitor the impact of their discharges; however, EPA has proposed revised monitoring programs which would become a condition of the permits to be issued to the applicants (section 301(m)(1)(C));
- The applicants have demonstrated that the proposed discharges will not result in any additional requirements on any other point or non-point source (section 301(m)(1)(D));
- The applicants do not plan to add new discharges or to increase existing discharges over the five-year permit period (section 301(m)(1)(E));
- The hydrological and geological characteristics of the receiving water are sufficient to allow compliance with all the requirements of section 301(m) (section 301(m)(1)(F));
- The applicants have proposed a program for research and development in water pollution control technology and have made clear their intention to undertake a contractural obligation to carry this program out upon issuance of modified permits; however, EPA has proposed a revised research and development program which would become a condition of the permits to be issued to the applicants (section 301(m)(1)(G));
- The facts and circumstances present a unique situation (section 301(m)(1)(H));
- No owner or operator of a facility comparable to that of the applicants situated in the United States has, at this time, demonstrated that it would be put at a competitive disadvantage to the applicants (or the parent companies or any subsidiaries thereof) as a result of the issuance of 301(m) permits (301(m)(1)(I)).

Detailed information on these findings is available in the tentative decision document.

Competitive Disadvantage

Section 301(m)(1)(I) requires EPA to make a finding that ". . . no owner or operator of a facility comparable to that of the applicant situated in the United States has demonstrated that it would be put at a competitive disadvantage to the applicant (or the parent company or any subsidiary thereof) as a result of the issuance of a permit under this subsection." While EPA has tentatively found that no competitor has made a demonstration of competitive disadvantage, EPA has not previously solicited such demonstrations. Among the information provided by the mills in their applications was incremental capital and operation and maintenance costs for alternative treatment systems that they could use to meet BPT/BCT limitations. The mills provided cost data on the following treatment systems at the request of EPA: Conventional activated sludge; deep tank activated sludge; oxygen activated sludge; and aerated stabilization basins. Louisiana-Pacific estimated capital costs ranging from $14 million for the installation of a deep tank activated sludge system to approximately $19 million for the installation of an oxygen activated sludge system. Simpson indicated a range of capital costs from about $13 million for installation of an aerated stabilization basin to $25 million for an oxygen activated sludge system.

Each mill also estimated operation and maintenance costs for BPT/BCT systems. Louisiana-Pacific estimated operation and maintenance costs from a low of $4.6 million for a deep tank activated sludge system to a high of $6.0 million for an oxygen activated sludge system. Simpson estimated the operation and maintenance costs from a low of $4.5 million for an aerated stabilization basin to a high of $7.0 million for an oxygen activated sludge system.

EPA has proposed to establish various conditions and limitations, including Best Available Technology Economically Achievable (BAT) limitations for nonconventional pollutants, that would be contained in the 301(m)-modified NPDES permits if EPA approves the variance.

In the event that EPA approves these permit modifications, neither the capital costs nor operation and maintenance costs of BPT/BCT control systems would be incurred by the mills. On the other hand, should the permit applications be granted, the permittees can be expected to incur pollution control costs as a result of their need to meet California water quality standards and the proposed BAT limitations. In addition, each successful applicant is required to provide funds in the amount required, but not less than $250,000 per year, for ten years for water pollution control technology research. Other pulp and paper mills subject to BPT/BCT requirements have incurred and will continue to incur wastewater treatment costs as a result of their compliance with nationally applicable regulations. It is for this reason that Congress required EPA to make a finding that a modification would not result in a competitive disadvantage to other manufacturers.

One purpose of this notice is to solicit information from other manufacturers as to whether they may experience a competitive disadvantage in the marketplace a result of the issuance of such modified permits. As made clear in the stuate, competitors may make their case on the basis of impacts on an individual facility, on the firm as a whole, or on affected subsidiaries. The successful demonstration of competitive disadvantage on a plant or firm basis would necessitate EPA's denial of the requests for modified permits. Both the statute and legislative history make it clear that the burden of proof on making this demonstration lies with the competitor.

Parties interested in making such a demonstration should contact Doug Eberhardt at the above address. Respondents will be required to prepare a narrative statement documenting their case that a competitive disadvantage situation would result. Respondents should provide balance sheet and

income statement information for fiscal years 1983–1985 together with information on cost and profit per unit of production in each of the three fiscal years, noting that component of cost per unit production which water pollution control contributes to overall cost. The appropriate unit of production for pulp producers is air dry tons. The information should be provided on a plant or firm basis, dependent on the respondent's claim. Any information submitted by respondents that is claimed to be confidential will be treated according to EPA regulations at 40 CFR Part 2.

Draft NPDES Permits

EPA is today providing notice that it has prepared draft 301(m)-modified NPDES permits for Simpson and Louisiana-Pacific. These draft permits contain effluent limitations on total suspended solids (TSS) based on Rest Professional Judgment (BPJ) for the dischargers' water treatment plants.

The effluent limitations on TSS for the process wastewater are based on the Effluent Limitations Guidelines for the Pulp, Paper, and Paperboard industry. The limitations on biochemical oxygen demand (BOD) and pH are modified from the Effluent Limitations Guidelines according to section 301(m). EPA has established BAT effluent limitations for non-conventional pollutants based on BPJ. The permits also contain waters quality-based limitations based on State water quality standards.

The draft permits contain various others terms, conditions and limitations, including Habitat Preservation Programs, Monitoring Programs, an Research Programs. The Habitat Preservation Program is included because EPA's tentative decision to approve the 301(m) application is based, in part, on ensuring that destruction of environmentally sensitive habitat, which could occur if the applications were denied, will not occur if the applications are approved. The Monitoring Program is included to implement section 301(m) (i) (C), and the Research Program, section 301(m) (1) (G).

Meeting With the 301(m) Applicants

EPA will continue to hold meetings with the 30(m) applicants and the State of California during the public comment period. Meetings will be held on July 14, 1986; August 11, 1986; and September 14, 1986. Persons interested in attending these meetings should contact Doug Eberhardt at the above address. Summaries of these meetings will be placed in the adminstrative record, which is available for public review.

Request for Concurrence/Certification From State of California

Concurrently with the issuance of the tentative decision to approve the 301(m) applications, and proposal of limitation in draft NPDES permits, EPA is requesting the State of California, through the State Water Resources Control Board (State Board), provide their concurrence, including providing certification of the permit under section 401 of the CWA. The final decision approving the 301(m) applications and the final 301(m)-modified permits cannot be issued unless the State concurs. Any comments on the appropriateness of the State providing concurrences may be provided to the State Board at the above address during the public comment period.

Dated: June 30, 1986.

Judith E. Ayres,

Regional Administrator.

[FR Doc. 86–15270 Filed 7–8–86; 8:45 am]

BILLING CODE 6560–50–M

[OW-FRL-3044-3]

Final NPDES General Permit for the Outer Continental Shelf (OCS) of the Gulf of Mexico

AGENCY: Environmental Protection Agency.

ACTION: Notice of Final NPDES General Permit.

SUMMARY: The Regional Administrators of Regions IV and VI (the "Regions") are today issuing a final National Pollutant Discharge Elimination System (NPDES) general permit for certain discharges in the Offshore Subcategory of the Oil and Gas Extraction Point Source Category (40 CFR Part 435 Subpart A). This final NPDES general permit establishes effluent limitations, prohibitions, reporting requirements, and other conditions on discharges from oil and gas facilities conducting exploration, development, and/or production operations. This permit authorizes discharges from facilities currently located in and discharging to the Gulf of Mexico seaward of the outer boundary of the territorial seas of the States bordering the Gulf, and any facility placed in and discharging to this area during the term of the permit. This permit does not authorize discharges from facilities in or discharging to the territorial seas of the coastal States (Florida, Alabama, Mississippi, Louisiana, and Texas), or from facilities defined as "Coastal" or "Onshore" (see 40 CFR Part 435, Subparts C and D).

ADDRESS: Notifications required under this permit should be sent to the appropriate EPA Regional Office as specified in Part II.C.5. of the permit. For EPA Region IV the address is: Director, Water Management Division (4W), USEPA Region IV, 345 Courtland Street, NE., Atlanta, Georgia 30365. For EPA Region VI the address is: Director, Water Management Division (6W), USEPA Region VI, P.O. Box 50708, Dallas, Texas 75250

Request for Coverage: Written notification of intent to be covered by the general permit shall be provided, as described in Part II.E. of this permit, to the appropriate EPA Regional Office prior to initiation of discharges. The permit also requires permittees to notify EPA within 60 days prior to the initiation of discharges at the site if an alternative toxicity limit is to be requested.

DATES: This permit shall be effective on Wednesday, July 2, 1986 at 1:00 pm Eastern Daylight Saving Time. This permit replaces general permit number TX0085642 which was published at 46 FR 20284 (April 3, 1981) and was reissued at 48 FR 41494 (September 15, 1983) and all expired individual permits for applicable oil and gas facilities located seaward of the outer boundary of the territorial seas within the Gulf of Mexico.

The data of submission of a notice of intent shall be the date of authorization to discharge for an operator under this permit. Operators currently authorized to discharge by the expired BPT general permit (TX0085642) or expired individual permits, or operators currently holding lease blocks that were not granted authorization to discharge by a BPT permit (*i.e.*, lease blocks purchased after June 30, 1984 in the geographic area of general permit TX0085642, or after January 1, 1984 for the Eastern Gulf Planning Area) must submit a notice of intent to the appropriate Region (see Part II.E.5. of the Permit) within 45 days after the effective date of this permit. Operators currently authorized to discharge by the expired general permit (TX0085642) or expired individual permits may continue to discharge in compliance with those expired permits until the operator submits a notice of intent to discharge under this general permit issued today. Such notice of intent to discharge must be submitted to the appropriate Region within 45 days after the effective date of this permit.

Any operator acquiring a lease block within the geographic area of this permit, who will discharge to the geographic area of this permit, during

the term of this permit must submit a notice of intent to the appropriate Region no later than 14 days prior to commencement of discharges at the facility. Operators authorized to discharge by an existing NPDES permit may request revocation of the individual permit and coverage by this general permit. Upon formal revocation of the individual permit this permit shall apply to the operator.

Discharge monitoring reports required under general permit TX0085642 or any expired individual BPT permit shall be submitted to the appropriate Region by December 1, 1986.

In accordance with 40 CFR 23.2, the Regions hereby specify that this permit shall be considered final agency action for purposes of judicial review at 1:00 pm Eastern Daylight Savings Time on July 2, 1986. In order to assist Regions IV and VI to correct any typographical errors, incorrect cross references, and similar technical errors, comments of a technical and nonsubstantive nature on the final permit may be submitted on or before September 8, 1986. The effective date of this permit will not be delayed by consideration of such comments.

Administrative Record: The administrative record for this permit is available for public review at EPA Region IV, Room C-6, and at EPA Region VI, (contact Ellen Caldwell) at: U.S. EPA, Region IV, 345 Courtland Street NE., Atlanta, GA 30365; U.S. EPA, Region VI, 1201 Elm Street, Dallas, TX 75270.,

FOR FURTHER INFORMATION CONTACT: Ms. Earline Hanson, Water Management Division, Region IV, at the address listed above (telephone (404) 347 7554, or Ms. Ellen Caldwell, Permits Branch, Region VI, at the address listed above (telephone (214) 767-2765.

Region IV and VI are holding a technical workshop to explain the final permit monitoring and reporting requirements. This workshop will be held at 9:00 am on July 23, 1986 in the New Orleans City Council Chambers, City Hall, 1300 Perdido, Room 1E04, New Orleans, LA.

Fact Sheet and Supplementary Information

I. Introduction

The Regional Administrators for EPA Regions IV and VI are today issuing a final general NPDES permit for oil and gas exploration, development and production facilities located in and discharging to the Gulf of Mexico seaward of the outer boundary of the territorial seas of the States of Florida, Alabama, Mississippi, Louisiana and Texas. This final permit replaces general permit number TX0085642 which was published 46 FR 20284 (April 3, 1981) and was reissued at 48 FR 41494 (September 15, 1983). It also replaces any expired individual permits for oil and gas facilities located in and discharging to the Gulf of Mexico seaward of the outer boundary of the territorial seas of the above designated states.

On July 26, 1985, the Regions published a notice of the draft general permit that is being issued in final form today (See 50 FR 30564). The Regions received materials from over 50 commenters on the proposed permit. In addition, the Regions held public meetings on the draft permit in New Orleans, Mobile, Tampa, and Houston in August and September 1985. All the public comments and statements presented at the public hearings are included in the administrative record and were considered by the Regions in determining the conditions for today's final permit.

The Regions published a detailed fact sheet and supplementary information with the draft permit (50 FR 30564). The Regions are incorporating by reference portions of that fact sheet and supplementary information as part of the final fact sheet and statement of basis and purpose for today's final permit. The sections of the prior fact sheet being incorporated are section I (Background), section II (Nature of Discharges From Oil and Gas Facilities Point Source Categories), and section III (Statutory Basis for Permit Conditions). The discussions presented in these sections should be consulted in reviewing the applicability and scope of the final permit conditions.

The remaining sections of the original fact sheet and supplementary information presented discussions of the specific effluent limitations contained in the proposed permit (section IV) and the required findings made pursuant to other legal requirements (section V). The discussions presented in section IV have been revised in response to public comments where appropriate. Therefore, the following supplementary information section presents a discussion of each of the permit conditions included in today's final permit with an explanation of major changes in the final permit conditions that the Regions have made in response to public comments. Section V presented necessary legal findings related to the proposed permit. Those legal findings are discussed again in this supplementary information section as they relate to today's final permit.

This supplementary information section also includes in a response to all the significant public comments filed on the proposed permit in Appendix A.

II. Specific Permit Conditions

A. Approach

The determination of appropriate conditions for each discharge was accomplished through:

(1) Consideration of technology-based effluent limitations to control conventional pollutants under BCT;

(2) Consideration of technology-based effluent limitations to control toxic and nonconventional pollutants under BAT; and

(3) Evaluation of the Ocean Discharge Criteria assuming conditions in parts (1) and (2) were in place.

Discussions of the specific effluent limitations and monitoring requirements derived from items (1) through (3) above appear in Parts B. through D. below, respectively. For convenience, these conditions and the regulatory basis for each are cross-referenced by discharge in the following table:

Discharge and permit condition	Statutory basis
Drilling muds:	
No oil-based muds	BCT.
No diesel	BAT.
Discharge rate limitations	Section 403(c).
No free oil	BCT.
Toxicity limitation	BAT.
Monitor volume discharged	Section 308.
Inventory of added substances	Section 308.
Monitor oil content	Section 308.
No discharge of mud contaminated with used oil.	BCT.
Drill cuttings:	
No discharge of cuttings from oil based muds.	BCT.
Monitor volume discharged	Section 308.
Deck drainage:	
No free oil	BCT.
Monitor discharge rate	Section 308.
Produced water:	
Oil and grease limits	BCT.
Monitor volume discharged	Section 308.
Produced sand:	
No free oil	BCT.
Monitor weight discharged	Section 308.
Sanitary wastes:	
No floating solids or foam	BCT.
Chlorine 1.0 mg/1	BCT.
Monitor discharge rate	Section 308.
Domestic wastes:	
No floating solids or foam	BCT.
Monitor discharge rate	Section 308.
Miscellaneous discharges:	
No free oil	BCT.
Inventory of added substances	Section 308.
Well Treatment and Test Fluids:	
No free oil	BCT.
Monitor volume discharged	Section 308.
All discharges:	
No halogenated phenols	BAT.
No floating solids or foam	BCT.
Minimize discharge of surfactants dispersants, and detergents.	Section 403(c), BAT.
Rubbish, trash, and other refuse	Section 402(a)(1).
No discharge in areas of biological concern.	Seciton 403(c).

B. BCT Requirements

1. *Oil and grease in produced water.* Under BPT, oil and grease in discharges of produced water were limited to a 48 mg/1 monthly average and a 72 mg/1 daily maximum based on oil/water separation technologies. The Regions

are establishing this permit's BCT limitation to be equal to BPT because the Regions do not have technology performance data available at this time on which to base a more stringent limitation. As this limitation is equal to the BPT level of control, there is no incremental cost involved.

2. *Free oil.* No discharge of free oil is permitted from discharges authorized by this permit, with the exception of produced water discharges that must comply with a specific oil and grease limitation. The Regions have determined that the BPT effluent limitations guideline of no discharge of free oil from the discharge of deck drainage, drilling muds, drill cuttings, and well treatment fluids should apply to other discharges, including uncontaminated bilge water, uncontaminated ballast water, desalination unit wastes, non-contact cooling water, blowout preventer fluid, and fire control system test water. Thus, the no free oil limitation is the Regions' best professional judgment determination of BPT controls for these discharges. No technology performance data available to the Regions indicate that a more stringent standard is appropriate at this time. For this permit, therefore, the Regions have established BCT effluent limitations equal to the BPT level of control and, as such, these proposed limitations impose no incremental costs.

The BCT effluent limitation on free oil for drilling muds is equal to the BPT limitation. The discharge of oil-based drilling muds (with oil as the continuous phase and water as the dispersed phase) is therefore prohibited since oil-based muds would violate the BCT effluent limitation of no discharge of free oil. The final permit also prohibits the discharge of cuttings associated with oil-based muds. The Regions determined that the discharge of such cuttings would violate the BPT "no discharge of free oil" limitation (see response to Comment 10).

The monitoring requirement for determining compliance with effluent limitation on free oil is the same method as proposed, a visual observation of the receiving water. The final permit, however, includes some modifications. First, the permit prohibits the discharge of drilling fluids except during periods when the visual sheen is observable. The Regions believe it generally is technologically feasible for operators to hold their mud systems and not discharge during periods of darkness or bad weather. Limiting the discharge of drilling fluids to periods when a visual sheen is observable will enhance the accuracy of the visual sheen compliance test method. If an operator cannot restrict his discharges to such periods, he must request an alternative test method be approved by the Regions. Second, for other discharges that are continuous, the permit requires at least one daily observation be conducted during daylight hours. Third, the final permit requires that operators record the total oil content of their discharged muds using the API retort test.

The Regions' decision to continue use of the visual sheen test method for determining compliance with the "no discharge of free oil" limitation reflects their careful consideration of the public comments, many of which requested that the permit require the use of the static sheen test. As discussed in the response to Comment 6, Regions IV and VI determined that it was not appropriate at this time to require operators in the Gulf of Mexico to use the static sheen test due to a lack of information regarding the non-water quality environmental impacts of land disposal and whether adequate land disposal sites exist.

3. *Floating solids and foam.* The BCT prohibition on floating solids is equal to the BPT level of control for sanitary wastes. As with the free oil limitations for other waste streams, the Regions have determined that the BPT effluent limitations guideline of no discharge of floating solids from the discharge of sanitary wastes should apply to all other discharges as well. Thus, the no floating solids limitation is the Regions' best professional judgment determination of BPT limitations for these discharges.

No technology performance data available to Regions IV and VI indicate that a more stringent standard is appropriate at this time. Therefore, the Regions have determined that the BCT effluent limitation on floating solids from these discharges is equal to the BPT level of control. As such, the extension of this limitation to all discharges will involve no incremental cost.

4. *Chlorine.* While chlorine itself is not listed conventional pollutant, its purpose as an effluent limitation is to control fecal coliform, which is a listed conventional pollutant. The requirement of maintaining residual chlorine levels as close as possible to, but no less than 1 mg/1, in sanitary waste discharges for facilities manned by 10 or more people is a BCT determination equal to BPT. There is therefore no incremental cost to the industry.

c. BAT Requirements

1. *Diesel oil.* The discharge of muds that have been contaminated by diesel oil (*i.e.*, those drilling muds that have contained diesel) or drill cuttings associated with these muds is prohibited. Diesel, which is sometimes added to a water-based mud system, is a complex mixture of petroleum hydrocarbons, known to be highly toxic to marine organisms and to contain numerous toxic and nonconventional pollutants. While this limitation thereby controls the toxic as well as nonconventional pollutants present in diesel, the Regions' primary concern is to control the toxic pollutants. The pollutant "diesel oil" is being used as an "indicator" of the toxic pollutants listed below, which are present in diesel oil and which are controlled through compliance with the effluent limitation (*i.e.*, no discharge). The technology basis for this limitation is product substitution of less toxic mineral oil for diesel oil.

The Regions selected "diesel" as an "indicator" instead of establishing limitations on each of the specific toxic and nonconventional pollutants present in the diesel-contaminated waste streams. The listed toxic pollutants, found in various diesel oils, that will be controlled by this limitation included: naphthalene, benzene, ethylbenzene, phenanthrene, toluene, fluorene, and phenol. Diesel oil may contain from 20 to 60 percent by volume aromatic hydrocarbons. The lighter aromatic hydrocabons, such as benzenes, naphthalenes, and phenanthrenes, constitute the major toxic components of petroleum products. Mineral oils, with their lower aromatic hydrocarbon content and lower toxicity, contain lower concentrations of toxic pollutants than diesel oils. Diesel oils also contain a number of non-conventional pollutants, including polynuclear aromatic hydrocarbons such as methylnaphthalene, dimethylnaphthalene, methylphenanthrene, and other alkylated forms of each of the listed toxic pollutants.

Regions IV an VI have determined that eliminating the discharge of drilling fluids contaminated with diesel oil will reduce the levels of toxic pollutants present in discharged fluids. Studies show that when the amount of diesel oil is reduced in drilling fluids, the concentrations of toxic pollutants and overall toxicity of the fluid generally is reduced. Available data clearly establish that diesel oils as a class contain significantly higher levels of toxic pollutants than do mineral oils as a class. It is reasonable and appropriate to conclude that BAT-level control of toxic pollutants (*i.e.*, reduction in concentrations thorough product substitution of mineral oil for diesel oil) will be achieved by regulating diesel oil

as an indicator pollutant (see response to Comment 18).

Regions IV and VI believe that the limitation based on product substitution of mineral oil for diesel oil represents a practical approach for the technologically feasible and economically achievable BAT level of control for the various toxic pollutants to be controlled. Establishing limitations on these pollutant parameters as indicator pollutants avoids the costly and technically complex requirement of complying with specific limitations on each of the toxic pollutants. Monitoring and analyzing all waste streams to confirm compliance with specific effluent limitations for each of the toxic pollutants is not considered by the Regions to be economically justified at this time. The analytical costs for specific pollutant analyses would be much greater than the cost of analyzing for diesel oils by gas chromatography alone. The cost of such compliance monitoring may include waiting for results of analyses that must be conducted onshore. Low toxicity mineral oils are available as product substitutes for diesel oil, offer simple, straightforward assurance of compliance with the limitation, and do not impose unreasonable additional costs on industry.

In this final permit, the Agency relied on the lower effective cost of mineral oil compared to diesel oil as one basis for this determination. The Diesel Pill Monitoring Program prepared by EPA and the American Petroleum Institute (DPMP, 1986) gives data on comparative costs of using a diesel oil pill and a mineral oil pill for Gulf of Mexico operators. For example, a mineral oil pill costs Gulf operators $19,200 for components, storage, and disposal, whereas a diesel pill would cost $26,500 if the operator takes part in the diesel pill monitoring program, and $116,300 if the operator does not take part in the program. Therefore, operators would actually have a savings of several thousand dollars by using mineral oil in the Gulf of Mexico rather than diesel oil for stuck drilling pipe.

2. *Toxicity effluent limitations.* Treatment to remove toxic pollutants from drillings fluids is not feasible because the only demonstrated treatment is designed to control solids (which does not necessarily control toxic pollutants) in drilling fluids by removing drill cuttings and other solids from the drilling fluid. It is the Regions' best professional judgment that the type and concentration of toxic pollutants, nonconventional pollutants can most efficiently be controlled during the drilling fluid formulation process and regulated by establishing a toxicity limitation on the discharge of drilling fluids.

The final permit limits the total LC50 toxicity of the drilling fluid including all the additives in the fluid. The final toxicity effluent limitation establishes a minimum 96-hr LC50 value of 30,000 ppm (for *Mysidopsis bahia*) on the suspended particulate phase, which discharged drilling fluids cannot exceed (*i.e.*, any drilling muds discharged must be less toxic than this toxicity number; toxicity is inversely related to the LC50, therefore no drilling fluids may have an LC50 *lower* than the specified minimum LC50).

The final permit requires drilling fluid discharges to meet a daily and a monthly average limitation for toxicity. Monthly sampling is required plus an end-of-well sample. A limit of 30,000 ppm LC50 is both the daily and montly limitation. If one sample is taken per month, the results of that sample represent the monthly average discharge. Therefore, as with any monthly effluent limitation, the sample should be taken early in the month to allow time for additional samples if needed to represent the discharge. If the first sample meets the montly limitation, then monthly compliance is assured. If the first sample violates the limitation, then in the case of the toxicity limitation a daily limitation violation must be recorded, and an additional sample should be obtained. The results of this additional sample and any subsequent samples taken during the month are averaged to determine the montly average. A montly average requirement allows the permittee to use all of the sampling data for that effluent to determine compliance rather than rely on one sample to represent all the days that discharge occurred.

The end-of-well (reaching total well depth) sample is required because it represents the worst case situation for drilling fluids toxicity, and the results of this sample must meet the daily discharge limitation; however, the end-of-well sample will be used with any other samples taken during the month to determine the monthly average toxicity limitation. Any calculation of the monthly average toxicity limitation are for discharges from only one well. The end-of-well sample results may not be averaged with drilling fluids toxicity sample results from a new well that was started later the same month.

The toxicity limitation is expressed as minimum number because toxicity is an inverse relationship when expressed as an LC50 value (*i.e.*, the lower the limit, the greater the toxicity). Definitions for the terms "daily minimum" and "monthly average minimum" are provided in the final permit.

The final permit also includes a provision whereby an operator may request that the appropriate Region establish an alternative toxicity limitation, on a case-by-case basis, in circumstances where the operator anticipates he will not meet the 30,000 ppm limitation. Section III.C. of the final permit sets out the Alternative Toxicity Request Procedure. That section provides that an operator may request an alternative toxicity limitation through submission of information listed in the permit. First, the operator must provide expected toxicity levels of the mud formulation intended for use by submitting the results of a laboratory 96-hour LC50 toxicity test of the drilling fluid and additives intended for use at the concentrations intended for use. Second, the operator must furnish information on the well location, start-up date, proximity to areas of biological concern, costs of both the proposed alternative mud system and of the mud system that would be required if no alternative toxicity limit were approved, and costs of barging and onshore disposal. This information is necessary for the Regions to assess the potential impacts of a decision to grant an alternative toxicity limitation. Finally, and perhaps most importantly, the operator must demonstrate that it is not feasible to use a mud formulation that would be less toxic than an LC50 of 30,000 ppm and that the mud formulation for which the alternative toxicity limitation is requested is the least toxic formulation available that is suitable for the intended drilling operation.

The Regions adopted a final toxicity limitation of 30,000 ppm suspended particulate phase (SSP) with a provision for an alternative toxicity limitation based on their review of the public comments and supporting data. As discussed in the fact sheet for the draft general permit, the Regions had considered establishing an LC50 toxicity limitation of 30,000 ppm but proposed an LC50 of 7,400 ppm to accommodate the use of mineral oil as a lubricity agent (see 50 FR 30569). The Regions now believe it is more appropriate to establish a toxicity limitation, generally applicable to all mud discharge, as equal to the toxicity of the most toxic generic mud. This is a LC50 of 30,000 ppm, the toxicity of Generic Mud No. 1. Data in the record indicate that approximately 12 percent of operators add a lubricity agent to their water-based muds and that the average concentration of the

lubricity agent is 2.5 percent. The Regions' proposed toxicity limitation was based on the addition of five percent mineral oil. Information available to the Regions indicate that hydrocarbon additives are acknowledged to be responsible for increases in the toxicity of mud formulations. Therefore, the Regions have concluded that it is neither reasonable nor necessary to establish the generally applicable toxicity limitation based on the practices of a very few operators who use high concentrations of mineral oils.

At the same time, the Regions recognize that some operators may require the use of lubricity agents, other specialized additives, or non-generic muds for a small portion of their drilling operations. The Regions do not believe they have adequate information at this time to conclude that all operators in the Gulf of Mexico could alter their drilling formulation to meet an LC50 limit of 30,000 ppm at all times. Therefore, the Regions included the special provision for requesting an alternative toxicity limitation for those few situations where the general limitation cannot be achieved.

The toxicity limitation as written in the final permit is technologically feasible and economically achievable. The data in the record indicate that the large majority of operators use mud formulations with an LC50 less toxic than 30,000 ppm. For those Gulf of Mexico operators who have not in the past performed their drilling operations with muds less toxic than 30,000 ppm, and who have not had to comply with a generic mud restriction in their BPT permit, the Regions believe there are adequate mud additives and formulations available to comply with the permit limit. For the small number of instances in which operators demonstrate it is necessary to use a mud formulation more toxic than 30,000 ppm, they may request an alternative limitation. For situations in which the operator is not given an alternative toxicity limitation and is not permitted to discharge, the Regions believe the limitation is still economically achievable. The cost of barging and disposing of a mud system is estimated to be $180,000 (see Diesel Pill Monitoring Program, 1986). This cost represents only five percent of the average total costs of drilling a well in the Gulf of Mexico. The Regions believe this cost is reasonable, especially when considered in relation to all costs and operations in the Gulf of Mexico. See Response to Comment 4 for further discussion.

The Regions also have deleted the provision in the draft permit that only allowed the discharge of generic muds. The Regions believe that limitation is unnecessary because all operators will be required to comply with a toxicity limitation and the prohibition on the discharge of free oil. Any operator using a mud system that will be more toxic than the permit limit of 30,000 ppm may request an alternative toxicity limitation as discussed above.

3. *Diesel Pill Monitoring Program.* While the permit prohibits the discharge of muds and cuttings contaminated with diesel oil, the permit also includes one exception to that prohibition. That exception provides that water-based drilling muds and associated cuttings may be discharged despite the presence of some residual diesel oil only if the diesel oil was used as a "pill" or "spotting fluid" to free stuck pipe and the operator participates and complies with the EPA/API Diesel Pill Monitoring Program. A copy of the Program (dated March 1986) has been made a part of the Administrative Record for the final permit.

The Diesel Pill Monitoring Program ("DPMP") has been developed by EPA's Industrial Technology Division cooperatively with the American Petroleum Institute to assist in evaluating the effectiveness of recovery of diesel oil from drilling muds when a diesel pill is used. Industry has requested that the discharge of diesel oil should be allowed when the diesel oil is the residual oil left in the mud following the use of a diesel pill and pill recovery techniques. The Agency currently has minimal information on the effectiveness of pill recovery. This fact, coupled with the increasing availability of mineral oil pills, has resulted in a prohibition of the discharge of any muds contaminated with diesel oil, excluding residual diesel oil from a pill. However, the Agency has determined that an opportunity should be made available to demonstrate whether a diesel pill can be effectively removed from a mud system after use. The Gulf of Mexico was selected for this study because of the large number and diversity of drilling operations. The Agency expects that a large number of operators will choose to use a mineral oil pill instead of a diesel oil pill, and therefore, not participate in the DPMP. For those operators that choose to use a diesel oil pill, the DPMP establishes conditions for pill recovery, bioassay testing, and monitoring to generate data on the effectiveness of pill recovery. Regions IV and VI are incorporating the Final DPMP (March 1986) into this permit.

The DPMP requires that an operator who uses a diesel pill and intends to discharge the drilling muds, recover the diesel pill plus at least 50 barrels of drill muds from either side of the pill. These drilling muds and recovered pills may not be discharged; they must be transported to shore for proper disposal or reuse. The DPMP also requires the operator to purchase a special sampling kit and take samples of his drilling mud system prior to use and after recovery of the diesel pill, as well as samples of the pill formulation and the diesel oil used in the pill. These samples must be sent to the laboratory specified in the DPMP for analysis including bioassay testing of the mud samples.

The DPMP will last one year from the issuance of this permit. Regions IV and VI may decide to continue the program for up to an additional year. EPA will then evaluate the data from the DPMP to determine the effectiveness of pill recovery. Based on the conclusions of the DPMP, a permit modification may be proposed, following the procedures of 40 CFR 124.5, to include a provision regarding whether discharge of drill muds and cuttings, following use of a diesel pill, will be allowed.

Any operator participating in the DPMP will be required to meet all permit limitations with the exception of the diesel oil prohibition (a mud system with residual diesel oil from the pill may be discharged) and the time of compliance with the toxicity limitation. Compliance with the toxicity limitation will be demonstrated by the sample taken from the mud system prior to use of the diesel pill, rather than the end-of-well sample. While the prior-to-pill mud sample is used for toxicity compliance, the operator still must take and submit an end-of-well sample. However, this sample will not be used to determine compliance with the toxicity limitation. After conclusion of the DPMP, but prior to permit modification, any operator using a diesel pill must continue to follow the DPMP requirements for pill removal, must continue to comply with the toxicity limitations prior to use of the pill, and will also be required to meet the end of well toxicity limitation. Operators that choose to use diesel oil as a lubricity agent and operators that choose to use diesel pills and not participate in the DPMP, are subject to the prohibitions on the discharge of their drilling fluids and cuttings.

4. *Other toxic compounds.* Under the final permit, discharge of halogenated phenol compounds are prohibited. The Regions base this prohibition on the fact that the class of halogenated phenol compounds includes toxic pollutants.

Also discharge of these compounds are previously prohibited in the BPT general permits for the Western Gulf of Mexico (46 *FR* 20284, April 3, 1981; reissued at 48 *FR* 41494, September 15, 1983). This class of compounds is subject to BAT limitations. Because operators complied with this provision in the BPT permit, there is no additional cost to the industry.

D. Requirements Based on the Ocean Discharge Criteria Evaluation

1. *No discharge in areas of biological concern.* The draft permit prohibits discharge in areas of biological concern, which are defined as locations identified by MMS as "no activity" or "live bottom". General permits previously issued for oil and gas facilities located in the Gulf of Mexico at 46 *FR* 20284 (April 3, 1981) and reissued at 48 *FR* 41494 (September 15, 1983) designated specific lease blocks that were excluded from coverage by the general permits. These excluded lease blocks were based on MMS-designated "no activity" areas. However, these areas are not the same as today's "no activity" areas because the "no activity" locations are defined by isobaths encompassing topographic highs (banks) and lease blocks are surveyed plots defined by coordinates. Additional lease blocks also were excluded from coverage by the previous general permits but were not related to MMS "no activity" areas. These lease blocks were excluded from coverage under the BPT permit based on a request to MMS from the National Marine Fisheries Service. This final permit provides NPDES permit coverage for the formerly excluded areas because it controls the discharge of toxic pollutants to these potentially sensitive areas. (See D.2.) below. The no discharge requirement for areas of biological concern is necessary to ensure no unreasonable degradation of the environment.

2. *Drilling fluids discharge rate limitation.* A controlled discharge rate for drilling fluids is required within 544 meters of areas of biological concern to ensure no unreasonable degradation of the environment. The discharge rate is based on establishing a toxicity criterion at a specific boundary, assuming a discharge at the permitted 96-hour LC50 toxicity limit of 30,000 ppm suspended particulate phase with *Mysidopsis bahia*. A safety factor of 0.01 was used in consideration of chronic versus acute effects; test species sensitivity versus sensitivity of species *in situ*, and synergistic interactions. A factor of 35 was used to represent whole drilling fluid toxicity since the 30,000 ppm limit is based on the suspended particulate phase. These two factors function to derive the toxicity criterion as:

$$0.01 \times \frac{30{,}000}{35} \text{ ppm} = 8.6 \text{ ppm}$$

Dispersion ratios that were derived as a function of discharge rate and transport time were developed to calculate the discharge rate limitation as using the following discharge rate equation:

$$R = 10^{[3 \log(d/15) - T_t]}$$

where,

R = discharge rate (bbl/hr)

d = distance (meters) from the boundary of a controlled discharge rate area

T_t = toxicity-based discharge rate term,

$= [\log(LC50 \times 8 \times 10^{-6}]/0.3657$

This limitation assures that the toxicity criterion is met at the boundary of the areas of biological concern. Using these formulas, an operator may request a greater or lesser discharge rate at a specific distance from an area of biological concern when using a mud less toxic or more toxic, respectively, than the 30,000 ppm toxicity limit considered here. (See Parts I.A.1.(g) and III.C.) In order to make this assessment, an operator must establish his mud toxicity based on the laboratory toxicity test of a hot-rolled mud having the same constituents in the same concentrations as will be used by the operator. This will allow an operator with the less toxic mud to discharge at a greater rate (or an operator requiring a more toxic mud but a lower discharge rate) near an area of biological concern and yet have no toxic impact on that area of biological concern.

The final permit prohibits the discharge of drilling fluids to which diesel oil was added or participation in the Diesel Pill Monitoring Program (DPMP) if the facility is subject to the discharge rate limitation requirement. The Regions have made this decision based on the following facts. First, the discharge rate limitation requirement is imposed to protect areas of biological concern from the impacts of toxic drilling fluids discharges. Second, participation in the DPMP removes the end of well toxicity requirement for drilling fluids. Third, it is acknowledged in the program (DPMP, 1986) that final drilling fluids toxicity may be increased after pill and buffer removal. Therefore, because diesel oil contains known toxic substances even at low concentrations of diesel oil and because the Regions have no information regarding the eventual toxicity of the drilling fluids after pill removal, the Regions have decided that participation in the DPMP will be prohibited for these facilities. This does not mean that the Regions are prohibiting the use of a diesel pill. When necessary, diesel pills can be used. However, the diesel pill and the entire mud system cannot be discharged, but must be brought to shore for appropriate disposal in compliance with Parts II.A.7., II.B.1., and II.B.6. of the Permit. At the conclusion of the DPMP, the Regions will reconsider this prohibition based on the information obtained during the program, and will reopen and modify the permit as necessary.

A maximum drilling fluids discharge rate of 1000 barrels per hour is required because reliable dispersion data are available only up to this discharge rate and because this rate does not represent any serious operational problem, based on comments received from the industry and discharge monitoring reports.

3. *Minimized discharge of cleaning compounds.* Surfactants, dispersants and detergents are used to clean up spills on drilling facilities to maintain safe working conditions. The permit requirement to minimize the discharge of these compounds is necessary to prevent no unreasonable degradation.

4. *403(c) determination.* The Regional Administrators have determined that all authorized discharges in compliance with this permit will not cause unreasonable degradation of the marine environment.

V. Other Legal Requirements

A. State Certification

Section 301(b)(1)(C) of the Act requires that NPDES permits contain conditions which ensure compliance with applicable State water quality standards or limitations. Under section 401(a)(1) of the Act, EPA may not issue a NPDES permit until the State in which the discharge will originate grants or waives certification to ensure compliance with appropriate requirements of the Act and State law. State waters are not included within the area of coverage by the draft permit, therefore, state certification is not required.

B. Oil Spill Requirements

Section 311 of the Act prohibits the discharge of oil and hazardous materials in harmful quantities. In the 1978 amendments to section 311, Congress clarified the relationship between this section and discharges permitted under section 402 of the Act. It was the intent of Congress that routine discharges permitted under section 402 be excluded from section 311. Discharges permitted under section 402 are not subject to section 311 if they are:

1. In compliance with a permit under section 402 of the Act:
2. Resulting from circumstances identified, reviewed and made part of the public record with respect to a permit issued or modified under section 402 of the Act, and subject to a condition in such permit; or
3. Continuous or anticipated intermittent discharges from a point source, identified in a permit or permit application under section 402 of this Act that are caused by events occuring within the scope of the relevant operating or treatment system.

To help clarify the relationship between discharges permitted under section 402 and section 311 discharges, EPA has compiled the following list of discharges that it considers to be regulated under section 311 rather than under a section 402 permit. The list is not to be considered all-inclusive.

1. Discharges from a platform or structure on which oil or water treatment equipment is not mounted,
2. Discharges from burst or ruptured pipelines, manifolds, pressure vessels or atmospheric tanks,
3. Discharges from uncontrolled wells,
4. Discharges from pumps or engines,
5. Discharges from oil gauging or measuring equipment,
6. Discharges from pipeline scraper, launching, and receiving equipment,
7. Spills of diesel fuel during transfer operations,
8. Discharges from faulty drip pans,
9. Discharges from well heads and associated valves,
10. Discharges from gas-liquid separators, and
11. Discharges from flare lines.

C. The Endangered Species Act

The Endangered Species Act (ESA) and its implementing regulations (50 CFR Part 402) require that each Federal Agency shall ensure that any of their actions, such as permit issuance, do not jeopardize the continued existence of any endangered or threatened species or result in the destruction or adverse modifications of their critical habitats. The Minerals Management Service (MMS) has undertaken endangered species reviews including full consultation with the Department of Commerce, the National Marine Fisheries Service (NMFS) and the Department of the Interior, Fish and Wildlife Service (FWS), with respect to oil and gas leasing activities in the geographic area for this general permit. Based on information in the NMFS and FWS biological opinions, contained in section IX.B. of the Final Regional Environmental Impact Statement (1983) prepared by MMS for the Gulf of Mexico, EPA has concluded that the discharges authorized by this general permit will not affect any listed species or their critical habitats. NMFS did not comment on the draft permit and FWS made no reference in its comments to any ESA concerns.

D. The Coastal Zone Management Act

The Coastal Zone Management Act (CZMA) and its implementing regulations (15 CFR Part 930) require that any federally licensed or permitted activity affecting the coastal zone of a State with an approval Coastal Zone Management Program (CZMP) be determined to be consistent with the CZMP (Section 307(c)(3)(A) Subpart D). For facilities operating in Federal waters, a decision to require a consistency determination might arguably require the determination that the permitted discharge will affect the territorial seas or coastal waters of the approved state (44 FR 37142, June 25, 1979; 15 CFR 930.50). Since there are not applicants identified in the general permit process, EPA in effect becomes the applicant certifying consistency and submitting a general permit for consistency review to the appropriate State agency. EPA sent a copy of the draft permit along with the consistency certification, to each State with a CZMP. (Louisiana, Mississippi, Alabama, and Florida.)

The State of Louisiana concurred in Regions VI's CZMP consistency determination. The State of Alabama provided no response on the consistency determination made by Region IV. The States of Florida and Mississippi each submitted comments on Region IV's consistency determination. Mississippi stated their consistency concurrence was contingent upon continued use of the discharge rate control has a buffer to their territorial seas. Florida also made its concurrence contingent upon publication of a final permit not less stringent than the proposed permit. Since this permit continues to require the discharge rate limitations in areas near the Mississippi territorial seas, and since the final permit is as stringent as the proposed permit, the Regions believe that the requirements of the Coastal Zone Management Act have been satisfied.

E. The Marine Protection, Research and Sanctuaries Act

The Marine Protection, Research and Sanctuaries Act (MPRSA) of 1972 regulates the dumping of all types of materials into ocean waters and establishes a permit program for ocean dumping. In addition, the MPRSA establishes the Marine Sanctuaries Program implemented by the National Oceanic and Atmospheric Administration (NOAA), which requires NOAA to designate ocean waters as marine sanctuaries for the purpose of preserving or restoring their conservation, recreational, ecological or aesthetic values.

Section 302(i) of MPRSA requires that the Secretary of Commerce, after designatign of a marine sanctuary consult with other Federal agencies, and issue necessary regulations to control any activities permitted within the boundaries of the marine sanctuary. It also provides other authority shall be valid unless the Secretary shall certify that the permitted activity is consistent with the purpose of the marine sanctuaries program and/or can be carried out within its promulgated regulations. There are presently no existing marine sanctuaries in the Gulf of Mexico.

F. Economic Impact (Executive Order 12291)

The Office of Management and Budget has exempted this action from the review requirements of Executive Order 12291 pursuant to section 8(b) of that order.

G. The Paperwork Reduction Act

EPA has reviewed the requirements imposed on regulated facilities in this final general permit under the Paperwork Reduction Act of 1980, 44 U.S.C. 3501 et seq. The information collection requirements of this permit have already been approved by the Office of Management and Budget in submissions made for the NPDES permit program under the provisions of the Clean Water Act.

H. Effective Date

The final NPDES general permit issued today is effective as of 1:00 pm Eastern Daylight Savings Time on Wednesday, July 2, 1986. Ordinarily, EPA would issue this permit and allow thirty (30) days before making the final permit effective. However, EPA may, under 5 U.S.C. 553(d)(1), make the permit effective immediately because it relieves a restriction on the regulated community by authorizing the discharge of pollutants in compliance with its terms. Without a permit, discharges of pollutants are prohibited under section 301 of the Clean Water Act. In addition, EPA finds that good cause exists under section 553(d)(3), because a later effective date would result in significant economic loss due to delays in the commencement of exploratory drilling operations. The Regions are allowing operators authorized to discharge by the prior BPT permits up to 45 days to discharge under those expired permits to allow time to adjust operations to come into compliance with the terms and conditions of the new permit.

I. The Regulatory Flexibility Act

After review of the facts presented and in the response to public comments above, we hereby certify, pursuant to the provisions of 5 U.S.C. 605(b), that this general permit will not have a significant impact on a substantial number of small entities. This certification is based on the fact that the vast majority of parties regulated by this permit have greater then 500 employees and are not classified as small businesses under the Small Business Administration regulations established at 49 FR 5024 *et seq.* (February 9, 1984). For those operators having fewer than 500 employees this permit will not have significant economic impact (see response to Comment 19). These facilities are classified as Major Group 13—Oil and Gas Extraction SIC 1311 Crude Petroleum and Natural Gas.

Dated: June 27, 1986.

Myron O. Knudson,

Acting Regional Administrator, EPA Region VI.

Dated: June 27, 1986.

Jack E. Ravan,

Regional Administrator, EPA Region IV.

Appendix A—Public Comments

Public notice of the draft permit was published in the **Federal Register** on July 26, 1985 (50 FR 30564) and in the Houston *Post*, New Orleans *Time Picayune*, Tampa *Tribune* and Tampa *Times*, and Mobile *Press* and Mobile *Register* on July 26, 1985. The Comment period was due to close on October 7, 1985. The comment period was extended for thirty days on October 8, 1985 (50 FR 41020) and finally closed on November 6, 1985. Public hearings on the proposed permit were held in: New Orleans, Louisiana on August 27, 1985; Houston, Texas on August 29, 1985; Tampa, Florida on September 4, 1985; and Mobile, Alabama on September 6, 1985.

Significant comments presented during the public comment period and at the meetings were reviewed by the Regions and considered in the formulation of the final decision regarding the proposed permit.

The following parties responded with written comments: United States Department of the Interior, Minerals Management Service and Fish and Wildlife Service; United States Department of Transportation, Coast Guard; Office of the Governor, Florida; Florida Department of Environmental Resources; Mississippi, Department of Wildlife Conservation; Alabama, Department of Environmental Management; Texas, Office of the Governor; Natural Resources Defense Council, Inc.; Sierra Club, Houston Group and Lone Star Chapter; Sierra Club, Florida Chapter and Manatee-Sarasota Group; Mobile Bay Audubon Society; Environmental Policy Institute; Oceanic Society; Florida Audubon Society; Florida Wildlife Federation; Florida Public Interest Research Group; MANASOTA 88; Florida Division, Izaak Walton League; Florida Defenders of the Environment; Offshore Operators Committee; American Petroleum Institute; Florida Petroleum Council; Cities Service Oil and Gas Corporation; CNG Producing Co.; Mobil Oil Southwest; Mobil Oil Corp., Texas and New Mexico; SOHIO; Union Oil; Marathon; Conoco; Kerr-McGee; Chevron; ARCO; Amoco; Diamond Shamrock; Exxon; Phillips Petroleum; Shell Offshore; TXP Operating Co.; Texaco; Petroleum Equipment Suppliers Association; International Association of Drilling Contractors; National Ocean Industries Association; SEDSCO; Dresser Industries; Continental Shelf Associates; Milchem; Vieux Carre Council; F. A. Bankston; Myrtle Duvall; Robert R. Kunkel; and two unsigned letters from concerned citizens.

(1) Comment: The State of Florida, Office of the Governor, and the Department of Environmental Regulations stated that State water quality standards apply to a distance of three (3) marine leagues (approximately 10.3 statute miles) offshore along the Gulf Coast of Florida. Florida asserts that because it owns mineral rights in the seabed out to a distance of three marine leagues the water column over the portion of the seabed is State territorial waters. The State claims that it will continue to regulate its waters in accordance with State water quality standards. Where State standards are more stringent than standards allowed under this general permit, then the more stringent standards will be enforced.

Response: EPA has concluded that the states have no authority under the Clean Water Act to require compliance with State water quality standard through the imposition of effluent limitations in NPDES permits beyond the three mile wide territorial seas. Moreover, the State of Florida has not been authorized to regulate discharges into the territorial seas under the Federal statute.

The Clean Water Act and its legislative history plainly indicate that the jurisdiction of the states to administer the NPDES program is limited to discharges into "navigable water," i.e. the internal waters of the state and the three-mile band of ocean known as "territorial sea." Section 402(b) of the Act authorizes "each state desiring to administer its own permit program for discharges into navigable waters within its jurisdiction" to submit a program to the EPA Administrator for approval. The Act defines the term "navigable waters" as "the waters of the United States, including the "territorial sea," but not including explicitly either the "contiguous zone" or the "ocean," both of which are defined separately as occupying regions beyond the "territorial sea." See sections 502(7)-(10).

The Act's provisions for EPA's permitting authority reinforces the Agency's conclusion that only EPA has authority to issue permits for discharges of pollutants beyond the "territorial sea." Under section 402(a)(1), EPA is authorized to issue a permit for the "discharge of any pollutant. . ." In turn, that phrase is defined at section 502(12) to mean the addition of any pollutant to "navigable waters," waters of the

"contiguous zone" or the "ocean." Therefore it is clear from the statute that the authority of the states to regulate discharges into "navigable waters" does not extend beyond the "territorial sea."

Furthermore, the legislative history of the Act supports the Agency's position that the states may not be authorized to issue permits for discharges into the "contiguous zone" or the "ocean." See A Legislative History of the Water Pollution Control Act Amendments of 1972, Serial No. 93-1, 93rd Congress 1st Session (1973) Vol. 1 at 813, 233-34. For additional support for EPA's position, see *Pacific legal Foundation et al. v. Costle*, 586 F. 2d 650, at 656 (9th Cir. 1978), *rev'd on other grounds*, 445 U.S. 198, *reh'g denied*, 446 U.S. 974 (1980).

Finally, the states' boundaries for purposes of ownerhip of submerged minerals under the Submerged Lands Act, 43 U.S.C. 1301 *et seq.*, are not controlling. As interpreted by the U.S. Supreme Court, that statute "reserves to the United States all constitutional powers of regulation and control over the areas within which the proprietary interest of the States are recognized." *United States v. Louisiana et al.*, 363 U.S. 1, at 10, *reh'g denied*, 364 U.S. 856 (1961), *supplemented* 382 U.S. 288 (1965). Therefore, Florida's ownership of mineral rights in the seabed beyond the three-mile territorial sea does not give the State the authority to regulate matters precluded by the Clean Water Act.

(2) Comment: Conoco noted that the draft permit limits authorization to discharge to those facilities located in and discharging to waters of the Gulf of Mexico located seaward of the outer boundary of the three-mile state territorial seas.

Response: Conoco is correct in its statement regarding the limited scope of the authorization to discharge under this permit. Only those facilities located in and discharging to waters of the Gulf of Mexico seaward of the outer boundary of the territorial seas are covered by today's final general permit. This permit was written to comply with the Clean Water Act requirements for BAT and BCT limitations. The Ocean Discharge Criteria Evaluation considered the effluent limitations, the marine water quality criteria, and the biological, physical, and chemical characteristics of the open, Federal Gulf of Mexico waters. The permit does not cover, nor did the Regions consider, discharges to the territorial seas or inland waters. Neither Regions IV nor VI requested a section 401(a) water quality certification from the Gulf of Mexico Coastal States, a prerequisite to authorizing discharges within state territorial seas or inland waters. Nor did the Ocean Discharge Criteria Evaluation address discharges to the territorial seas. Discharges into the territorial seas or inland waters must be authorized by either another general permit or separate individual permits.

(3) Comment: The Offshore Operators Committee (OOC) expressed concern about the cost of toxicity testing and asserted that there may be a shortage of test laboratories and test organisms. The OOC projected the cost to be approximately $1000 per well, with the total annual cost to Gulf permittees of about $1 million, based on 1065 wells. The potential for a shortage of test organisms was based on experience of the EPA round robin testing program and an OOC research project.

Response: The final permit requires the permittees to comply with both daily maximum and monthly average toxicity limitations. The Regions decided to require a monthly average limitation that results in at least monthly toxicity testing plus the end-of-well test required by the draft permit. The monthly average requirement allows the permittee to average several toxicity tests results from one well, rather than rely on one toxicity test to represent test results during the extire time discharge occurred. For example, assuming a typical well requires 45 calendar days to drill, a minimum of two toxicity tests would be required for permit compliance.

In the BAT/NSPS rulemaking, the Agency's cost estimates for toxicity testing on a per-well basis and an industry-wide basis are as follows. Two toxicity tests are performed for each well at a unit cost of $1000 each, including sampling, shipping, and testing costs. The per well cost would be $2000. The Agency estimated an industry total of 1166 wells tested per year (1060 wells in the Gulf of Mexico). Therefore, the aggregate industry annualized cost (in 1982 dollars) would be $2.3 million (2.1 million in the Gulf). The $2000 expenditure for toxicity testing is only about 0.05 percent of the 1981 cost of drilling a typical offshore well. (From ERG data, 1985). The Regions find the cost of this requirement to be economically achievable.

An alternative approach to effluent toxicity limitations for drilling fluids that was considered and rejected by the Regions was establishing effluent limitations for specific priority organic pollutants. The costs for self-monitoring and analysis with the approach to regulation would be in the range of $5000 to $10,000 on a per-well basis. Thus the Regions' toxicity approach to regulations of drilling fluids will result in less costly monitoring requirements than other approaches and is considered to be economically achievable.

With respect to the commenter's concern with shortage of test organisms for conducting toxicity tests, the Agency expects that the duration of the any shortage situation will be short. Since proposal of BAT/NSPS rules, the Agency has seen a significant and continual increase in laboratory capacity and test organism supplies. The Agency expects that the toxicity testing requirement in the final permit will accelerate the availability of test organisms and laboratory capacity to a level that will shortly meet demand. The examples of shortage cited by OOC were unanticipated by suppliers of these test organisms and there currently is no economic incentive for culturing laboratories to keep a large supply on hand when there is no demand. Personnel at EPA's Gulf Breeze laboratory indicate that culturing test organisms at a level sufficient to meet testing demands should not pose a serious problem on the basis of their experience culturing these test animals over the last 3 years.

(4) Comment: Many industry commenters stated that if a toxicity limitation was to be imposed in the permit, it should be not greater than (*i.e.*, not less toxic than) an LC50 of 2,000 ppm on the suspended particulate phase. A number of commenters raised the issue of variability associated with toxicity testing and contended that the Agency has not adequately accounted for the potential sources of variability in establishing its LC50 toxicity limitation.

Another group of commenters urged the Regions to impose an LC50 toxicity limitation of 30,000 ppm (suspended particular phase) consistent with the limitation proposed in the national guidelines and the toxicity criterion in the Region X permits.

Response: The Regions proposed in the draft permit a toxicity limitation that would establish a minimum 96-hour LC50 value of 7,400 ppm (for *Mysidopsis bahia*) on the suspended particulate phase. The LC50 value of 7,400 ppm represented the toxicity of Generic Mud No. 8, which is the third most toxic and one of the more commonly used of the eight generic drilling muds, with five percent added mineral oil. The bioassays were conducted at the EPA laboratory in Gulf Breeze (Duke and Parrish 1984). The Regions determined that the limitation would enable the discharge of any of the generic muds (the most toxic generic mud is Generic Mud No. 1 with a 96-hour LC50 of 30,000 ppm) as well as most of the generic

muds with up to five percent added mineral oil which is "considered an adequate concentration to satisfy lubrication needs". 50 *FR* 34592.

In the fact sheet for the draft permit, the Regions also explained that they had considered establishing two toxicity limitations: A less stringent LC50 for drilling muds containing lubricants (7400 ppm) and a more stringent LC50 for drilling muds with no lubricants. The more stringent toxicity limit would be 30,000 ppm, the 96-hour LC50 for Generic Mud No. 1. This is the toxicity limitation proposed by EPA last year in the national effluent limitations guidelines and the Region IX general permit and is the toxicity criterion used in the current Region X permits (although Region X permits include special provisions for mineral oil). The Regions had expressed their concerns that a single LC50 limitation of 30,000 ppm would not adequately account for necessary uses of lubricity agents and that two limitations might serve as an incentive to use a lubricity agent in order to qualify for the less stringent toxicity limitation. Therefore, the single limitation of 7,400 ppm was selected.

The Agency received an extensive number of comments on this issue. Industry commenters generally objected to any toxicity limitation. However, if a toxicity limitation was to be imposed, most of those same commenters proposed as an alternative limitation, a 96-hour LC50 of 2,000 ppm. This limit was selected based on three industry-sponsored bioassays of Generic Mud No. 8, with two samples containing five percent added mineral oil and one sample containing 10 percent added mineral oil. The LC50 results for the two tests with five percent added mineral oil were 3,090 ppm and 2,620 ppm, with lower 95 percent confidence limits of 2,090 ppm and 2,180 ppm. The test with 10 percent added mineral oil yielded an LC50 of 2,870 ppm.

Other commenters suggested that the Regions should adopt a 30,000 ppm limitation, arguing that a BAT toxicity limitations should not be set at a level to accommodate all foreseeable toxicities of muds, including the use of five percent mineral oil. One commenter stated that mineral oil was seldom needed at concentrations of five percent and that one percent was an adequate level. EPA bioassay tests with Generic Muds No. 2 and 8, with one percent mineral oil added, have demonstrated LC50s of 134,000 ppm and 71,000 ppm (Duke and Parrish 1984).

In response to the public comments, the Regions have modified the toxicity limitation in the final permit. The final permit establishes a toxicity limitation of 30,000 ppm for all mud discharges with the provision that individual operators may request the appropriate EPA Region establish an alternative toxicity limitation for an individual well drilling program if the operator determines that he will be unable to comply with the 30,000 ppm limitation. The supplementary information section discusses the data that an operator must submit to the Agency and the demonstrations that must be made to receive an alternative toxicity limitation. This procedure will allow the Regions to accommodate those drilling situations in which an operator demonstrates that he is using the least toxic available mud formulation for his drilling operation. The Regions believe that the toxicity limitation that they have selected for the final permit accommodates the concerns of the commenters regarding the 7,400 ppm limitation, the Agency's concerns that a toxicity limitation should address the uses of lubricity agents, and the issue of variability.

The basis for establishing the final limit was the toxicity study conducted on the eight generic muds at EPA's Gulf Breeze laboratory. For these eight muds, the most toxic mud (Generic Mud No. 1) was found to have a 96-hour LC50 of 2.7 percent of the suspended particulate phase, or 27,000 ppm. The next most toxic mud (Generic Mud No. 3) has a 96-hour LC50 of 163,000 ppm. Three other muds had measurable toxicity: Generic Mud No. 8 (293,000 ppm), Mud No. 2 (516,000 ppm), and Mud No. 7 (654,000 ppm). The remaining three muds had less than 20 percent mortality in 100 percent test phase. These results were reanalyzed during development of the proposed guideline for this industrial category to correct for spontaneous mortality in the control (zero concentration) group. This consideration produced generally higher 96-hour LC50 values: Generic Mud No. 1—30,000 ppm; Mud No. 3—158,000 ppm; Mud No. 8—277,000 ppm; Mud No. 7—550,000 ppm; Mud No. 2—583,000 ppm. The Regions have adopted a final toxicity limitation of 30,000 ppm. This limit provides operators with a wide latitude for potential mud toxicities.

The Regions have determined that establishing the toxicity limitation at 30,000 ppm, based on that limit representing the toxicity of Generic Mud No. 1, is warranted. Mud No. 1 is the most toxic generic mud. It is six times more toxic than Generic Mud No. 3, which is the next most toxic mud, and more than nine times more toxic than the remaining generic muds. The Regions believe that establishing a toxicity limitation based on Generic Mud No. 1 is a technologically feasible limitation, achieved by use of available, less toxic mud formulations. Furthermore, the Regions believe that establishing this limit on the basis of the most toxic generic mud also addresses the issue of toxicity test variability. Comments were received by the Agency expressing a concern that variability associated with toxicity testing may not have been sufficiently considered in the development of the toxicity limitation. The Regions disagree with this position.

Data have been provided to EPA by industry (comments provided by Dr. J.E. O'Reilly) that characterize toxicity test variability, including intralaboratory variability, interlaboratory variability, and mud formulation/interlaboratory variability. Intralaboratory variability (i.e., the reproducibility of test results on one sample repeatedly measured by a laboratory) ranged from 0–14.8 percent (coefficient of variation) for Generic Muds No. 1, No. 5, and No. 7 when tested by three contract laboratories, using an API toxicity test protocol (which is different from the EPA toxicity test protocol specified in this permit). Significantly, these laboratories failed to follow either the API or EPA protocols, which require using 60 test organisms (mysids) per test concentration in the test, but used only 20 mysids. While the author acknowledged that the estimates of intralaboratory variability were thought to ". . . slightly overestimate the intralaboratory variability of the API protocol because only 20 mysids per test concentration were used to calculate the LC50, rather than the specified 60 mysid shrimp", (O'Reilly at 8) he dismissed the effects as being minimal. However, a comparison of the data supplied to support this position indicate more than a minimal effect. Although the mean LC50 values of 20- and 60-animal tests were very similar (39,800 ppm vs 37,800 ppm, respectively) the coefficient of variation increased from 3.3 percent for the 60-animal test to 14.8 percent for the 20-animal test. Thus, a potentially substantial effect (up to a 4.5-fold increase in variability) on the estimated intralaboratory variability of this data set was probably introduced by this modification to the API protocol.

Interlaboratory variability was estimated by testing split samples of Generic Muds No. 1, No. 5, and No. 7. The submitted comment noted ". . . the excellent agreement (coefficient of variation of only 3 percent) demonstrated for generic muds #1 between four of the five laboratories [including two EPA labs] . . . even though slightly different protocols were used and they [the muds] were tested over 200 days apart. . . ." (O'Reilly at

12). The mean LC50 value among these four labs for this mud sample, for which EPA determined the LC50 to be 27,000 ppm (EPA Gulf Breeze) and 28,000 ppm (EPA Narragansett), was 27,375 ppm. When the fifth testing laboratory was included, a coefficient of variation of 13 percent was obtained, with a mean LC50 value of 30,467 ppm. For Generic Mud No. 5, these five laboratories reported an LC50 > 1,000,000 ppm, therefore there was no measureable interlaboratory variability. For Generic Mud No. 7, the estimated coefficient of variation among the three contract laboratories was 52 percent. However, this estimate of variability was based on the observation that two laboratories obtained LC50 values > 1,000,000 ppm, while the third laboratory obtained a value of 174,0000 ppm. The estimated LC50 for this generic mud, which was previously tested at EPA's Gulf Breeze laboratory, was 654,000 ppm. This degree of variability must be considered in view of two factors in addition to interlaboratory variability. One is the smaller test populations used, as compared to the number specified in the EPA protocol, which may substantially increase the estimated variability provided in this comment (as discussed above, up to a 4.5-fold increase, or from a possible 12 percent to the observed 52 percent). Second, the low toxicity of this mud (174,000 to > 1,000,000) must be considered in comparison to that of the most toxic mud (30,000 ppm), upon which the effluent limitation is based. Although lower toxicity muds may have greater percentage variability, the difference between their toxicity and the toxicity limitation in the permit will reduce considerably the chance of noncompliance due to variability factors.

Finally, data on variability due to mud formulation and interlaboratory variability were provided that indicated a range of 54–74 percent (coefficient of variation). These values, however, represent not only the two mentioned sources of variability, but also differences attributable to using different protocols (API and EPA), and different numbers of test animals (20 and 60 animals). Observed differences in the test protocols may have exaggerated observed variability in these tests because of the addition of oil to the mud in four of six samples. This exaggeration of variability is due to the differences in the protocols used, which differ with respect to their aeration specifications and separation procedures (decantation vs. siphoning), both of which can be expected to result in potentially large differences in residual oil content in the test material, and therefore, measured toxicity. For example, mixing mud plus oil for 1 hour open to the air can result in a loss of up to half of the added oil content, potentially resulting in a two-fold difference in toxicity test results.

Given these considerations, the estimated interlaboratory variability could be as low as 3 percent; at worst it has been estimated at 13 percent for the most toxic mud (Generic Mud No. 1). Greater possible variability (up to 50 percent) was estimated for muds with higher LC50s (lower toxicities), which are farther from the final toxicity limitation. These estimates, however, are characterized by systematic sources of error that potentially result in substantially increased (by up to a factor of 4.5) estimated variability. The second most toxic generic mud, with an LC50 of 163,000 ppm, would include approximately 95 percent of interlaboratory variability at 120,620 ppm or 99 percent at 99,430 ppm, if variability is based on a coefficient of variation similar to that of Generic Mud No. 1 (13 percent). Considering the estimated variability provided in these comments, their likely overestimation because of test design differences, and the large difference between the toxicity of the most toxic generic mud (upon which the effluent limitation is based) and that of the second most toxic mud, this limitation appears to be reasonable within the context to toxicity testing variability.

A larger concern occurs for operators using the most toxic, KCl generic mud. For this mud, data supplied by industry indicate that KCl muds were used in 3 of 45 samples from one data set and none of 25 samples from a second data set. A survey of 74 wells drilled in the Gulf of Mexico, conducted by EPA, identified no usage of KCl muds. These data suggest an approximate KCl usage level of 2 percent. When submitting mud formulations for toxicity testing by EPA's Gulf Breeze laboratory, industry was requested to provide worst-case samples of the muds, *i.d.*, the most heavily treated mud systems. Thus, the limit derived in testing Generic Mud No. 1 probably represents the most toxic potential of this mud formulation. Therefore, many KCl muds in use may well have actual toxicity values greater than 30,000 ppm. For the fraction of KCl muds that may actually have an LC50 of 30,000 ppm, arguably up to half of this fraction of muds may fail the compliance limit because of statistical variability. The Regions considered the potential impact of this factor to be less than some 10 well-drilling programs affected annually, and considers this impact acceptable. This consideration is consistent with Agency practice for other parameters that are measured close to a promulgated effluent limitation.

The results from a recent survey conducted by the American Petroleum Institute on the toxicity of used muds from Gulf of Mexico operations, which were not intended or designed to comply with generic mud or toxicity limitations, supports the Regions' selection of the final toxicity limitation. The survey included 45 bioassays from 43 wells. Most samples were taken during the last five months of 1985, and most samples were taken from end of well muds, which are muds more likely to be most toxic. The survey identifies the type of mud formulations used; whether a hydrocarbon additive, either mineral oil or diesel oil, was used in each formulation; the number (but not the names, chemical identity, or concentrations) of other additives used; and the resulting toxicity of each formulation.

There was a wide range in the toxicity of the mud formulations that could in part, have been explained had the survey indicated what other additives had been used in the formulations. The data demonstrate that all but two mud formulations without hydrocarbon additives, which according to industry estimates comprise 88 percent of wells drilled, had LC50s greater than 30,000 ppm. Most were substantially less toxic than the LC50 limitation of 30,000 ppm; the two exceptions had LC50s of 17,400 and 17,530. These mud formulations had 1 or 2 unspecified other additives; neither mud formulation was a generic mud. The results for muds with mineral oil, which industry estimates to comprise some 12 percent of wells drilled annually, showed a number of muds with greater toxicities. Of the 17 samples to which mineral had been added, eight of the samples had LC50s below 30,000 ppm, ranging from 1,000 to 16,600 ppm. Among the remaining nine samples, the LC50s ranged from 42,000 to 680,000 ppm.

The Regions' review of these data led to the conclusion that a large portion of the surveyed operators were able to conduct their drilling operations with mud formulations significantly less toxic than a toxicity limitation based on Generic Mud No. 1 (30,000 ppm). Toxicities greater than 30,000 ppm (i.e., LC50s less than 30,000 ppm) were generally attributable to mineral oil. Additionally, the API survey demonstrates the weakness of the assertion of many commenters that the

limitation applicable to all dischargers should assume the addition of five percent mineral oil. In the survey, only two out of 43 operators had used five percent mineral oil. The most frequently used amount was three percent, which is consistent with other data that suggested an estimated average mineral oil usage concentrations to be 2.5 percent. (Letter from Burgbacher to Ruddy, October 30, 1985.)

The Regions had established the proposed toxicity limitation at 7,400 ppm in the draft permit in order to accommodate those operators who would use up to five percent mineral oil as a lubricity agent. On reevaluation of available data, the Regions believe that an LC50 of 7,400 ppm for all operators is unnecessarily lenient. As the API survey results demonstrate, most operators could comply with an LC50 limitation of 30,000 ppm. Significantly, many of those operators who could not comply with a 30,000 ppm toxicity limitation also could not comply with a 7,400 ppm toxicity limitation. Only by establishing an LC50 limitation at the level requested by the industry commenters, i.e., 2,000 ppm, would most of those operators exceeding a 30,000 ppm LC50 be able to comply with the limitation. The Clean Water Act does not intend that BAT effluent limitations be established based on the worst performers in the industry. It would not be appropriate to establish the limitation for all operators based on the highest level of mineral oil used by any operator.

While the Regions decided not to base the final LC50 limitation on the bioassay data representing the addition of five percent mineral oil (either 7,400 ppm based on EPA's data or 2,000 ppm based on industry data), the Regions also determined that the permit should make some provision for the addition of a mineral oil lubricity agent. Concurring with the assessment of Region X that the Agency has incomplete data on the toxicities of the various mineral oils that may be used in drilling operations, the Regions determined that rather than establishing a specific LC50 limitation in the permit reflecting such use, the permit would include a provision for establishing an alternative toxicity limitation on a case-by-case basis. This special provision in the permit will allow an operator, who anticipates that a necessary mud formulation will violate the LC50 of 30,000 ppm, to request an alternative LC50 limitation. This provision grants operators flexibility while ensuring that the Regions have an opportunity to review whether the operators have justified the need to discharge more toxic mud formulations.

Where an individual operator finds that his mud formulation will not pass the LC50 limitation of 30,000 ppm, finds that product substitution will not produce an operationally adequate mud formulation that can pass the toxicity limitation, and is denied an alternative toxicity limitation, the operator would be prohibited from discharging the drilling fluid. The operator therefore would be required to transport the spent drilling fluid to shore for reuse, recovery, or disposal. The cost of barging and land disposal of drilling fluid from a typical offshore well in the Gulf of Mexico is estimated by the Regions to be $180,000. This is based upon the need to dispose of approximately 5400 barrels (bbl) of drilling fluid, the use of two boats over 20 days of actual well drilling, and land disposal costs of $11 per bbl of waste. This cost is less than five percent of the cost of drilling a typical well. The Regions have determined that the cost of this disposal alternative is reasonable and economically achievable, especially considering the small number of wells that the Regions' anticipate will be required to dispose of muds onshore.

(5) Comment: Several commenters requested that the Regions establish any toxicity testing requirements for monitoring purposes only, i.e., not an enforceable limitation. The commenters believed an enforceable toxicity limitation would be invalid because the Agency failed to identify either the specific toxic or nonconventional pollutants to be controlled by the toxicity limit or establish a correlation between the level of toxicity and the presence or absence of the pollutants to be controlled. The commenters proposed that the toxicity testing be required for only one year and not be reinstated until such time as the Agency establishes a national additive approval program. Some commenters suggested that operators using only generic muds and approved additives with not more than five percent mineral oil should be allowed to discharge regardless of the toxicity of the final mud system.

Response: In determining whether to establish an enforceable toxicity limitation in the final permit, the Regions carefully considered as an option the suggestion of the commenters that the permit require toxicity testing for monitoring purposes only. The Regions determined, however, that the data available to the Regions supported a decision to include an enforceable toxicity limitation in the final permit. The Regions have substantial data on the available mud formulations and the range of toxicities resulting from those formulations. Those data establish that the large majority of drilling operations in the Gulf of Mexico are conducted using mud formulations less toxic than the most toxic generic mud (Mud No. 1). Because the primary means for controlling the discharge of pollutants is through the use of product substitution, i.e., using less toxic drilling mud formulations and additives, the Regions concluded that an enforceable limitation should be required as a BAT technology-based limitation.

As a technology-based limitation, the Regions determined that the toxicity limitation in the final permit was technologically feasible and economically achievable by the offshore oil and gas industry in the Gulf of Mexico. Because the Regions were able to make these findings, there were no compelling reasons for not requiring compliance with a toxicity limitation in the final permit. The commenters suggestion that the toxicity testing be for monitoring purposes only would result in several years delay in imposing controls on the discharge of the toxic pollutants present in drilling muds.

Those commenters who argued that a toxicity limitation would be invalid because the Regions have not correlated the toxicity of drilling muds with specific toxic and nonconventional pollutants present in drilling muds mistakenly assume that the Regions are using the toxicity limitation as an "indicator" limitation for specific toxic and nonconventional pollutants. EPA's permitting regulations specifically provide for establishing effluent limitations "expressed, where appropriate, in terms of toxicity." 40 CFR 125.3(c)(4). A toxicity effluent limitation is analogous to other effluent limitations on generic pollutant parameters, such as chemical oxygen demand (COD), total organic carbon (TOC), or biochemical oxygen demand (BOD), all of which are single parameters that measure the contribution of a number of specific, effluent chemical constituents. As with toxicity, limits on COD, TOC, and BOD can be based on technology or on water quality. In this final permit, the Regions are using toxicity as a technology-based effluent limitation and have considered the appropriate statutory criteria in establishing this limitation.

(6) Comment: Many commenters requested that the Agency retain the visual sheen test as the compliance monitoring requirement for the "no free oil" limitation. These commenters favored the visual sheen test over the static sheen test. One commenter

dismissed the static sheen test as "unrealistic, very dependent on light conditions and extremely subjective." Another commenter stated that the static sheen test was developed for ice conditions and there was no justification for its use in the Gulf of Mexico. A further comment was that the static sheen test would provide no additional environmental protection beyond the visual sheen test.

Other commenters argued that the Agency should require that operators use the static sheen test rather than the visual sheen test. These commenters stated that the static sheen test provided a more reliable test method and allowed detection of free oil prior to discharge rather than after discharge occurs.

Response: The Regions have decided to retain the visual sheen test for compliance monitoring of the "no free oil" limitation for all waste streams in the final permit. As discussed in the fact sheet, discharges of drilling fluids to which oil has been added, or cuttings derived therefrom, will be limited to daylight hours.

The Regions do not accept the criticisms of the commenters that the static sheen test is not a reliable or reproducible test method. The Regions believe that the static sheen test has been proven to be both a reliable and reproducible test method. However, for the reasons discussed below, the Regions have concluded that it is not appropriate at this time to require the use of the static sheen test in the permit being issued today.

The Regions currently do not have adequate information with which to assess the potential economic impacts on the oil and gas industry and nonwater quality environmental impacts in the Gulf of Mexico of imposing a requirement to use the static sheen test for determining compliance with the "no discharge of free oil" limitation in the permit. Approximately 1,000 wells may be drilled annually in the area covered by this permit. Preliminary estimates from industry in the record indicate that approximately 12 percent of drilling operations in the Gulf of Mexico use lubricity agents. This percentage may be higher in the newer lease areas that are in deeper waters and may require more frequent use of lubricity agents. The Agency, in its ongoing rulemaking for the offshore oil and gas industry, is evaluating the extent to which lubricity agents are used, the type of lubricity agents being used, and the available substitutes for petroleum hydrocarbon lubricity agents. At this time, however, Regions IV and VI do not have complete information with which to estimate the total number of wells that may be drilled in the Gulf of Mexico using lubricity agents. Without this information, the Regions cannot estimate the number of drilling operations that may be impacted by imposition of the more stringent static sheen test for determining compliance with the "no discharge of free oil" limitation.

This lack of information on the total number of wells that may fail to comply with the "no discharge of free oil" limitation by using the static sheen test affects not only the Regions' ability to determine the economic achievability of the limitation but also the Regions' ability to make the statutory assessment of nonwater quality environmental impacts. The Regions expect that drilling fluids that fail the static sheen test would have to be barged to shore for disposal on land. The Regions do not have adequate information on whether there will be sufficient capacity on land to properly dispose of the potentially large volume of drilling muds that would require on shore disposal. Without information on the potential volume of drilling muds that may be disposed onshore, and the existing capacity of land facilities at which the drilling fluids could be properly disposed, the Regions cannot meet their statutory obligation of assessing the potential nonwater quality environmental impacts of a permit that imposed a requirement to use the static sheen test.

Regions IV and VI recognize that Region X has required the use of the static sheen test in permits issued for the Alaska offshore drilling and that Region IX has proposed to require the use of the static sheen test in the permit for the California OCS. The far fewer drilling operations in Regions IX and X clearly are a major factor distinguishing those Regions from the Gulf of Mexico. Regions IX and X could make the appropriate findings considering the limited number of operations in those Regions.

If the Agency imposes a requirement to use the static sheen test for determining compliance with the "no discharge of free oil" limitation in the ongoing oil and gas effluent limitations guidelines rulemaking, Regions IV and VI would propose to modify today's final permit to incorporate such a requirement. However, at the current time Regions IV and VI have concluded that today's permit should retain the requirement to use the visual sheen test.

(7) Comment: Several commenters suggested that the effluent limitations for produced water either include other pollutants or that additional treatment be required to limit the amount of priority pollutants contained in the discharge. An environmental group stated that the definition of produced water be required should include dissolved substances such as metals, salts, and hydrocarbons. A regulatory Agency suggested further treatment of produced water to reduce the levels of polynuclear aromatic hydrocarbons (PAH) in order to protect marine life. This commenter suggested filtration of produced water through a water polisher with some Best Management Practices for timely changing and proper disposal of the filters. Further reduction of PAH content after filtration would be obtained through diffusion and aeration of the produced water before discharge. This commenter stated that such filtering and aeration techonology is available, economically possible, and effective.

Response: Regions IV and VI have not changed the definition of produced water in the permit. Produced water is defined to include water and suspended particulate matter brought to the surface with recovery of oil and gas. The Regions also have decided to require produced water discharges to meet the BPT level of treatment technology (48 mg/1 monthly average and 72 mg/1 daily maximum) for oil and grease content. This level is identical to that proposed in the draft permit.

The Regions agree that produced waters may also include heavy metals, salts, and polynuclear aromatic hydrocarbons, but believe that not all produced waters will contain these pollutants. Information available to the Regions (Assessment of the Environmental Fate and Effects of Discharges from Offshore Oil and Gas Operations, EPA 440/4-85/002, August 1985) indicates that in the absence of biocides or other toxic additives, the acute lethal toxicity of produced water is reduced and is probably related to the presence of light hydrocarbons. In its proposed rulemaking for BAT/NSPS for the offshore oil and gas segment, the Agency has determined that no effective treatment technologies currently exist for additional reduction of organics in produced water discharges to surface waters, with the exception of reinjection technology. Filtration in particular was determined to achieve no quantifiable reductions in priority pollutants beyond that achievable by BPT technology. The removal of priority pollutants by filtration may not be achievable due to the presence of priority organics in dissolved form, which cannot be removed by a physical treatment step such as filtration. Furthermore, the Agency currently lacks sufficient cost and economic information on reinjection

for existing sources to properly evaluate its technical feasibility and economic achievability. The Agency is currently obtaining more information for evaluation in the BAT/NSPS rulemaking process. The Regions, therefore, have decided that their BPJ determination of the BCT-level of treatment for this wastestream is equal to the current BPT-level of control.

(8) Comment: NRDC commented that BPT treatment for produced water (oil and grease separation) is ineffectual in removing dissolved priority and non-conventional toxic pollutants. NRDC stated that EPA must require all produced waters to be reinjected under BPJ/BAT in order to comply with sections 301 and 304 of the Clean Water Act. NRDC contended that the cost of retrofitting does not appear to be unreasonable, estimating costs to be $643,000 per platform. NRDC also commented that, as an alternative to reinjection, the BAT oil and grease levels of produced water discharges should be limited to 15 mg/l using oil and grease as an indicator of both the toxic pollutants and non-conventional pollutants. NRDC also suggested that this 15 mg/l limit would be consistent with the U.S. Coast Guard and Annex I of the International Convention for the Prevention of Pollution from Ships, 1973 as modified by the Protocol of 1978 (MARPOL 73/78) requirements. The commenter argues that limiting oil and grease to this level would be "cost reasonable" under BAT since it would cost less than as estimated $50 per pound.

Response: The Agency considered BPT treatment, filtration, carbon absorption, chemical precipitation, biological treatment and reinjection technologies for the reduction of priority and non-conventional toxic pollutants in produced water from existing sources. The Agency found that with the exception of reinjection technology, the other technologies were either not technologically feasible to implement or achieved no quantifiable reductions in priority and non-conventional toxic pollutants. (See 50 *FR* 34602–603). At this time, the Regions have concluded that the BPJ/BAT requirement for reinjection of produced water from existing sources (*i.e.*, zero discharge), is inappropriate for the final permit.

The Agency, in its BAT/NSPS rulemaking process, does not have sufficient information at this time to make a determination on the technological feasibility of retrofitting reinjection technology for existing sources. As such, the economic achievability of reinjection for existing sources can not be determined. The Agency is continuing with studies and data collection efforts in order to make these determinations. The Regions will undertake modification of this permit as appropriate when the Agency completes the feasibility and economic achievability determinations for reinjection for existing sources.

The Agency's estimates for reinjection of produced water for existing sources in the Gulf of Mexico range from $1.8 million to $10.6 million (capital costs) and from $107 thousand to $591 thousand (annual costs), depending upon facility size and location (1982 dollars). This is substantially more than the commenter's estimate. The commenter did not provide enough detail for the Agency to compare cost estimates to identify the reasons for the large differences in estimates. The retrofit component cost of the Agency's estimates and the technical feasibility of retrofitting the technology is subject to re-evaluation as described below.

The information available on the technologies for the treatment of produced water from offshore production facilities indicates that the attainable effluent levels of oil grease are a daily maximimum of 72 mg/l and a monthly average of 48 mg/l. The "MARPOL limit" of 15 mg/l is for discharge of oil and grease from ballast and bilge water and for discharges of tank washings and non-segregated ballast from product holds. Similar technology to meet this 15 mg/l limitation has not been demonstrated to be achievable for produced water from offshore production facilities. This is likely due to the continuous nature of produced water discharges, including varying flow rates and varying waste characteristics of produced water which must be treated on a continuous basis compared with the relatively constant waste characteristic of shipping wastewaters that are subject to the MARPOL limits. In summary, because the Agency cannot identify a technologically feasible treatment alternative to achieve the MARPOL limits for offshore produced water discharges, with the possible exception of reinjection technology, the Regions cannot establish such a limitation on oil and grease at this time to serve as an indicator of priority and non-conventional pollutants. The Regions have decided at this time to not impose reinjection to achieve such limitations for existing sources pending determinations of technical and economic achievability of this technology, as discussed above.

The basis of the commenters estimate of approximately $50 per pound of oil and grease removal by "MARPOL technology" to meet the recommended 15 mg/l limitation for oil and grease for produced water is not presented. Nonetheless the Clean Water Act does not authorize the Agency to rely on "cost per pound" of pollutant removal in establishing BAT pollutants or control levels.

(9) Comment: Two environmental groups commented that diesel oil should not be discharged, even at a residual concentration in drilling muds or cuttings following removal of diesel oil pill. The Natural Resources Defense Council, Inc. (NRDC) argued that all diesel oil discharges should be prohibited because: (1) Mineral oil pill substitutes are available, (2) diesel oil contains significant levels of toxic pollutants, (3) Region X has prohibited all discharges of diesel oil, and (4) the Agency has proposed to prohibit diesel oil discharge in the BAT/NSPS rulemaking. NRDC further stated that the objective of the Diesel Pill Monitoring Program (DPMP) should be to "evaluate the operational adequacy of mineral oil pills." Other NRDC comments on the DPMP are that: (1) No toxicity exemption should be granted for participation, (2) samples will be obtained by untrained personnel, (3) the oversight committee should include a public interest group and EPA Office of Water Enforcement and Permits representatives, and (4) the EPA Gulf Breeze Lab should be the quality assurance lab instead of the industry funded Central Control Laboratory.

Response: As discussed in the fact sheet for the draft permit, the Regions have established the DPMP in cooperation with the industry to provide the industry with an opportunity to demonstrate the effectiveness of pill recovery. The final permit prohibits the discharge of diesel oil unless it is residual oil from use as a pill by an operator participating in the DPMP. The DPMP contained in the Gulf of Mexico permit will provide the Agency with information on levels of diesel oil remaining in drilling fluids systems after diesel "pill" removal. The Regions also believe that the DPMP is appropriate at this time because the Regions do not have complete information that mineral oil will be an available substitute for all Gulf of Mexico operations. The Regions believe that many operators will use mineral oil pills but that the DPMP will allow additional time for other operators to become familiar with mineral oil pills. The Regions agree with the commenter that diesel oil contains significant levels

of toxic pollutants. That is why the Regions have prohibited all discharges of diesel oil except in compliance with the DPMP. The DPMP, however, may demonstrate that, through pill recovery, no diesel oil remains in the drilling fluid system. If so, the discharge of diesel oil to surface waters will be prevented while allowing operators to continue using diesel oil pills.

The final Gulf permit contains an enforceable toxicity limitation on drilling fluid discharges regardless of whether an individual operator participates in the DPMP. Where an operator participates in the DPMP, compliance with the toxicity limitation is determined prior to addition of the diesel oil. This requirement was established to allow for adjustments to the pill recovery methods and volumes throughout the DPMP in order to maximize diesel recovery. The Regions exempted DPMP participants from compliance with an end-of-well final toxicity limitation in order to avoid permit noncompliance during implementation of the DPMP. After the sampling phase of the DPMP is completed, however, the end-of-well toxicity limitation applies to all drilling discharges.

The Regions do not agree that the DPMP should be modified to evaluate the use of mineral oil pills because the permit allows use of mineral oils as lubricity agents. However, if the DPMP establishes the effectiveness of pill removal, the Agency may consider requiring removal of all pills, diesel and mineral.

An oversight committee has been established to review progress and results of the DPMP on a quarterly basis. Based on the committee's findings, the methods of operating the DPMP may be adjusted. For example, pill recovery volumes may be adjusted to determine effects on diesel recovery. In early 1986, NRDC was invited to participate in the oversight committee hearings by EPA's Office of Water. EPA's Office of Water Enforcement and Permits will also participate.

The industry has informed the Agency that it would like to conduct one or more joint workshops on the DPMP in order to provide information and training to industry operators. The Agency also is concerned that operators be afforded adequate training on the purpose and techniques of sample collection and shipment for the DPMP. Accordingly, the Agency will participate in DPMP training workshops early in the program.

The EPA Gulf Breeze Laboratory is involved with the DPMP in a quality assurance capacity. The industry Central Control Laboratory also performs quality assurance functions but primarily functions to control the logistics of sample preparation, shipment and analysis.

(10) Comment: Industry groups, oil companies and drilling fluid companies commented that the prohibition on discharge of cuttings from oil-based drilling fluid would deter further cuttings treatment research. They also conclude that the antibacksliding regulation would prevent new technology development for cuttings treatment. Several of the commenters recommended allowing the discharge of cuttings which contain up to 10 percent oil as representing standard cuttings washer technology. Two commenters stated that the cuttings from oil-based muds should be controlled the same as cuttings from water based muds. Finally, two commenters stated that a treatment may be achieved which will cause no unreasonable degradation or irreparable harm to the environment. Concoco believes that a multi-tiered approach is needed to recognize differences in well locations because greater distances from shore results in greater hauling cost. They also raised concerns about availability of onshore locations for disposal. One company supplied information on a treatment process that treats cuttings by drying but no cost information was provided.

Response: No change has been made in the final permit. The discharge of cuttings from oil-based drilling muds is prohibited. At present, most of the operators are hauling these cuttings to shore for disposal. This practice became common after MMS required several major operators to remove oily cuttings from around their facilities after detection of free oil by MMS inspectors. Because of the past permit violations, the Regions have determined to prohibit the discharge of cuttings associated with oil-based muds. The Regions do not have sufficient information at this time to demonstrate that current cuttings washer technologies can consistently reduce the oil content of cuttings below 10 percent. (Jones and Burgbacher 1983). The Regions do not believe this is sufficient to comply with the BPT "no discharge of free oil" limitation.

In response to the comment that this limitation will not encourage the development of cuttings treatment technology research, the Regions acknowledge this may be the case. However, until such time as the Regions have adequate information to demonstrate cuttings can be cleaned to achieve the no discharge of free oil limitation, the Regions do not believe they can authorize the discharge of cuttings from oil-based muds. If effluent guidelines are promulgated allowing disposal after use of cuttings washers, a permittee could request a permit modification if his costs of compliance are wholly disproportionate to the costs considered in establishing the guideline.

With respect to the comment questioning availability of onshore disposal sites, the Regions share the commenters concerns but believe that because most operators currently dispose onshore, there will be only a minor increase in demand for onshore disposal sites.

(11) Comment: A number of industry commenters requested changes to the generic muds list to reflect new technology and to satisfy conditions in the Gulf of Mexico. The commenters stated that the eight generic muds were based on drilling straight holes in the mid-Atlantic with a provision for additives approval. One commenter recommended a limit for the major mud components without listing the generic muds, rather than limits for the major components for each generic mud. Shell Offshore, Inc. supplied data to support the addition of gypsum mud to the generic mud list. The Offshore Operators Committee stated that EPA has not compared "the drilling efficiency or effectiveness between the eight generic drilling muds and alternative mud formulations" and that the cost of these differences has not been considered.

Response: In response to the public comments, the Regions have decided to delete the requirement that only generic drilling muds are authorized for discharge. Under the terms of the final permit, major drilling mud components and additives may be discharged without concentration limitations on the components provided the effluent limitations on free oil, toxicity, diesel oil prohibition, and discharge rates are met. These limitations will afford the permittees greater flexibility in choosing drilling mud systems that are the more effective for a specific purpose, but still control the ultimate toxicity of discharged mud formulations.

(12) Comment: One industry commenter stated that the costs of muds and cuttings disposal will be excessive under the proposed permit limitations. No information was provided to relate permit requirements to disposal costs except to state that it costs $100,000 per 15,000 foot hole to dispose of muds and cuttings on shore, not considering rig downtime.

Response: The Agency's estimate for disposal of a typical drilling fluid system and the associated cuttings from one well by transport to shore and land

disposal is $195,000. This is based upon rental of 2 boats for 20 days of actual drilling and land disposal costs of $11/bbl. for 5400 bbl of wastes. The Regions project that very few operators will be required to barge under the final permit. The alternative toxicity request procedure will minimize any requirements for barging and disposal on shore.

(12) Comment: Three environmental organizations requested permit limits on the concentration of mercury and cadmium in discharged barite. The Sierra Club requested that this permit contain the limits that EPA Region IX proposed at 50 *FR* 34068 in the general permit for the Southern California OCS. The Natural Resources Defense Council, Inc. requested that the permit limit mercury and cadmium in discharged barite to 1 mg/kg each because: (1) Mercury and cadmium are indicator metals for other associated priority pollutants, (2) elevated levels of mercury and cadmium have been found around offshore oil and gas operations, (3) alternative sources of barite with low concentrations of mercury and cadmium are available and (4) EPA's economic assessment for the BAT guidelines indicates that using "clean" barite would not significantly affect the industry overall.

Response: The regions believe additional data is needed on the availability of barite which contains mercury and cadmium at the minimum concentrations prior to setting an effluent limit on these metals. The Regions do not believe that a complete data base on the range of mercury and cadmium concentrations for drilling mud components has been developed for the Gulf of Mexico. While the Agency proposed mercury and cadmium limitations as part of the proposed BAT and NSPS for the oil and gas extraction point source category, the Agency also stated its intention to collect additional data on the availability and cost impacts of using only uncontaminated barite for all offshore operations. The Regions acknowledge that Region X has imposed and Region IX has proposed mercury and cadmium limitations in the Alaska and California general permits. However, clean barite currently is used in the small number of Alaska and California operations. The large number of operations in the Gulf of Mexico prevent the Regions from concluding that adequate supplies of clean barite currently are available for all Gulf operations. If effluent guidelines are promulgated which require mercury and cadmium limits, this permit will be modified to incorporate the guidelines limits.

(14) Comment: Two environmental groups requested that the discharge of chrome lignosulfonate be prohibited because chromium is a priority pollutant and substitutes are available. Both commenters cite EPA Region IX's prohibition on chromium discharge.

Response: Region IX's proposed BAT controls on chrome lignosulfate were based on mud usage records which indicate that substitutes were already in use by two-thirds of California OCS operators. Thus, the Region was able to conclude that the proposed prohibition has been demonstrated to be technologically feasible and economically achievable for the Southern California permit. In contract, Regions IV and VI do not have comparable data on the availability and cost impacts of substitute products for the much larger number of operations in the Gulf of Mexico. Lacking such data, the Regions are unable to make the findings which would be required for a BAT determination to prohibit the discharge of chrome lignosulfate in the Gulf.

(15) Comment: An environmental group commented that the permit should place BCT limits on the conventional pollutants biochemical oxygen demand (BOD), pH, and total suspended solids (TSS) in discharges of drill muds and drill cuttings. This commenter stated that the BOD due to discharges of drill muds from offshore oil and gas operations may be six times greater than the total BOD of ocean dumped municipal sludge. (Citing EPA's Assessment of Environmental Fate and Effects of Discharges From Offshore Oil Gas Operations, EPA 4440/4-85/002 page ES-3). This commenter also stated that muds are generally very basic (*i.e.*, pH > 8.0) and contain high amounts of TSS.

Response: The Agency presently does not have sufficient data on biochemical oxygen demand (BOD) to determine whether this pollutant is appropriate to regulate at the BCT control level. The limited data that the Agency has on BOD content of drilling fluids indicate that this pollutant may be a candidate BCT pollutant. In the BAT/NSPS rulemaking, the Agency is developing a broader data base upon which to evaluate BOD as a BCT pollutant for the drilling fluids waste stream.

In the current BAT/NSPS rulemaking, the Agency is considering whether the "solids" components of drilling fluids and drill cuttings should be considered total suspended solids (TSS). When this evaluation is complete, the final BCT methodology will be applied to determine the appropriateness of establishing TSS (as well as BOD) as BCT pollutants.

The Agency agrees that drilling fluids are generally basic but has determined in the BPT rulemaking process for this industry segment that pH is not a pollutant of concern for the drilling fluids waste stream. Furthermore, the conventional pollutant pH cannot be expressed in terms of volume on weight like the other conventional pollutants. Because the BCT methodology and cost tests require the quantification of pollutants in weight, pH cannot be subjected to analysis for BCT. Thus, the regulation of pH for the BCT level of control is dependent upon (i.e., equal to) the BPT level of control.

(16) Comment: Four operators and one industry group requested a change in the drilling fluids inventory reporting requirements to reflect material added downhole rather than material discharged. They stated that an estimate of discharged material is burdensome and unnecessary because of reactions between components prior to discharge and the ability to identify generic drilling fluids from materials added downhole.

Response: The Regions agree that sufficient information will be obtained by reporting the volume or mass of drilling fluid constituents added downhole. If additional information is required, a measure of the discharged components would be required instead of the estimate required in the draft permit. The final permit requires the permittee to maintain an inventory of materials added downhole, rather than those discharged.

(17) Comment: Several industry commenters requested that the Regions approve a list of additives to be used with the generic muds. API proposed that the Regions tentatively approve use and discharge of those additives that have been approved by Region VI for discharge in the Flower Garden Banks and by EPA Regions IX and X. The commenters proposed this approval process as an alternative to an enforceable end-of-well toxicity limitation.

Response: The Regions considered but did not adopt the option of establishing an additive approval process. The large number of driling operations in the Gulf of Mexico make such an option extremely resource intensive and not feasible for Regions IV and VI to implement. Such a procedure is used by Region X which has limited drilling operations. Region IX's proposed permit

would impose an enforceable end-of-well toxicity limitation.

The Regions also could not accept API's proposal that Regions IV and VI allow the discharge into the Gulf of Mexico of all additives "approved" by any EPA Region in the past. Regions IV and VI do not believe that such prior "approvals" always were based on adequate data. Region IX's list of "approved" additives is extensive, having been developed over the the past several years, and Regions IV and VI are not convinced that adequate data supported the listing of all such additives. The Region VI "approvals" often were based on limited data, Regions IV and VI therefore believe that these prior lists should not be the basis for discharge limitations over the next five years under today's BAT permit. In contrast, Region X has imposed more rigorous data requirements and has approved only a fraction of the additives approved.

It should be noted that the basis for Region VI's approval of additives for discharge in the Flower Garden Banks was that the additives would not increase the toxicity of the generic mud approved for use in the permit. This generally was Generic Muds No. 2–8, which are far less toxic than the 30,000 ppm LC50 value for Generic Mud No. 1. When Region VI did approve the use of Generic Mud No. 1, the approval was conditioned on no increase in the toxicity of Mud No. 1. (*i.e.*, 30,000 ppm LC50). Also, information submited by OOC on the additives approved by Region IX demonstrate that these additives were represented to Region IX by persons seeking approval as not increasing a mud's toxicity below 30,000 ppm. The commenter, therefore, declines to endorse the technical representations accompanying the data, but only endorses their use as a substitute for an enforceable limitation.

Regions IV and VI believe it was necessary to establish an enforceable toxicity limitation in the permit as the only feasible means for ensuring control of the discharge of pollutants that result in greatly increasing the toxicity of drilling fluids. The data base currently does not allow the Regions to, in effect, adopt all prior approvals as appropriate and effective controls for the toxicity of drilling muds. If the Agency establishes a national clearinghouse, the Regions have stated that they will modify the permit to incorporate such a provision. However, the Agency is not currently pursuing development of such a clearinghouse.

(18) Comment: An industry commenter challenged the Region's use of diesel oil as an indicator pollutant for the listed toxic pollutants present in diesel oil.

Response: The Regions believe that they adequately explained in the proposal the bases and justifications for using diesel oil as an indicator pollutant. However, in order to fully respond to comments, the Regions will restate and elaborate on their position and decision.

As the Regions have discussed in the proposal, diesel oil is a complex mixture of petroleum hydrocarbons. Diesel oil may contain from 20 to 60 percent by volume aromatic hydrocarbons (Thoresen and Hinds 1983). The light aromatic hydrocarbons, such as benzenes, naphthalenes, and phenanthrenes, constitute the most toxic major components of petroleum products (National Research Council 1983, p. 81). One issue raised is whether diesel oil should be regulated as a conventional, nonconventional, or toxic pollutant. While the mixture "diesel oil" is not listed in EPA regulations as a toxic pollutant, the Regions have previously noted the presence in diesel oil of numerous listed toxic pollutants including naphthalene, benezene, ethylbenzene, phenanthrene, toluene, fluorene, and phenol. The Regions furthermore have identified numerous specific nonconventional pollutants in the mixture "diesel oil," including polynuclear aromatic hydrocarbons such as methylnaphthalene, dimethylnaphthalene, methylphenanthrene, and other alkylated forms of each of the listed toxic pollutants.

The Regions believe that the real issue is not the particular pollutant category in which to place diesel oil, but rather how best to regulate and control the numerous listed toxic pollutants present in diesel oil.

The Regions considered and rejected the option of establishing specific numerical effluent limitations for the conventional pollutant oil and grease (which would measure diesel oil) in drilling fluids, or for the numerous listed toxic and nonconventional pollutants, the presence or concentration of which would be attributable to diesel oil contamination of the drilling fluid. The Regions have chosen to use "diesel oil" as an indicator of the many toxic pollutants present in that complex mixture. By prohibiting the discharge of diesel oil, the Regions will reduce the discharge of toxic pollutants. The Regions' decision to take this approach was therefore in full compliance with the applicable permitting regulations at 40 CFR 125.3(h)(1).

Section 125.3(h)(1) authorizes a permit writer to establish limitations for a conventional pollutant more stringent than BCT, or limitations for a nonconventional pollutant which shall not be subject to modification under section 301 (c) or (g), where (in either case): (1) The pollutant has been identified as an indicator in effluent limitations guidelines or (2) the permit writer makes findings warranting use of the pollutant as an indicator.

In the absence of BAT guidelines, the Regions have acted pursuant to the second provision. See 40 CFR 125.3(h)(1)(ii). First, § 125.3(h)(1)(ii)(B) requires the Regions to identify the toxic pollutants to be controlled by the limitation on diesel oil. As noted above, the listed toxic pollutants found in various diesel oils include naphthalene, benzene, ethylbenzene, phenanthrene, toluene, fluorene, and phenol. These pollutants were identified in the notice published on July 26, 1985 and in a report prepared for API by Battelle Laboratories [Requejo *et al.* 1984].

Second, §§ 125.3(h)(1)(ii) (A) and (C) require findings that the indicator limitation reflects BAT-level control for the specific toxic pollutants and that establishing effluent limits on the specific toxic pollutants would be economically or technically infeasible. The BAT-level control for the specific toxic pollutants would be the reductions achievable through use of the technology basis for the limitations. Whether the Regions choose to control the indicator pollutant diesel oil or the specific toxic pollutants, the technology basis would be product substitution, *i.e.*, use of mineral oil instead of diesel oil. The Regions are not aware of a treatment system that could be installed and used on a rig to reduce toxic pollutants in drilling fluids prior to discharge.

The Regions have determined that prohibiting the discharge of drilling fluids contaminated with diesel oil (*i.e.*, substitution of mineral oil for diesel oil in drilling fluids) will reduce the levels of the toxic pollutants present in the discharged fluids. Studies show that when the amount of diesel is reduced in drilling muds, the concentrations of toxic pollutants and the overall toxicity of the fluid generally are reduced (Breteler *et al.* 1985, Duke and Parrish 1984, Requejo *et al.* 1984, Science Applications, Inc. 1984).

A calculation (conducted in cooperation with EPA Region X) of the predicted BAT levels of control for specific toxic pollutants can be made by multiplying the known concentrations of specific pollutants in mineral oils (*e.g.*, Requejo *et al.* 1984) by the assumed concentration of oil in the drilling mud. The results of these calculations for

numerous toxic pollutants and classes of nonconventional pollutants are contained in the administrative record. The concentrations of these pollutants will vary, as expected, depending on the amount and specific type of mineral oil used. Concentrations of toxic pollutants resulting from as much as 5 percent by volume "Mineral Oil A" were predicted to range from undetectable amounts of benzene, ethylbenzene, fluorene, phenanthrene, and phenol to 2.5 mg/l of naphthalene. Calculations for 5 percent "Mineral Oil B and C" resulted in undetectable amounts of benzene, ethylbenzene, naphthalene, and phenol and from 0.5 to 7.5 mg/l fluorene and 2 to 10 mg/l phenanthrene. No other toxic pollutants were detected, thus for Mineral Oils A, B, and C the sums of the concentrations of these toxic pollutants were 2.5, 17.5, and 2.5 mg/l, respectively. It should be noted that a concentration of 5 percent mineral oil is more than twice the amount of oil generally expected (approximately 2.0 percent) based on material submitted by the industry. Thus, a more realistic estimate of toxic pollutant concentrations is less than one-half of the above amounts, or approximately 1 to 7 mg/l. These toxic pollutant levels can be compared with a total of 25 to 67 mg/l of the above pollutants when various diesel oils are used. This exercise assumes diesel pill removal, resulting in a residual diesel concentration in the mud of 1.5 percent by volume. The concentration of diesel oil could be much greater if a diesel pill were not removed or diesel oil were used as a lubricity agent.

The Regions also have concluded under 40 CFR 125.3(h)(1)(ii)(C) that the alternative of establishing effluent limitations for each of the seven toxic pollutants present in diesel oil is not economically achievable or technically feasible at this time. As discussed above, the level achievable by BAT controls on the specific toxics can be calculated using available data on the three mineral oils which have been extensively characterized. However, the limited data on the many diesel and mineral oils, mud formulations, and various additives used, and on the unquantified changes in toxic pollutant concentrations during drilling all frustrate an attempt to develop specific toxic pollutant effluent limitations at this time. A permit limitation that prohibits the discharge of diesel oil is economically and technologically feasible and allows a determination of permit compliance prior to discharge.

(19) Comment: Diamond Shamrock Exploration Company commented that the permit requirements will have an unacceptable impact on small operators in the Gulf of Mexico. "Companies in our peer group do not have the personnel and resources that a major oil company has to handle the paperwork, regulatory compliance, etc. that certain provisions of the draft general permit would require."

Response: Regions IV and VI are not persuaded that this permit will place an undue burden on the offshore operators in the Gulf of Mexico. In the Agency's proposed BAT/NSPS rulemaking, Diamond Shamrock was determined to be a "major integrated" oil company (as opposed to an "independent"). A major oil company is differentiated from an independent in part by its production volume, revenue and income, considerably larger assets, greater financial resources, and a high degree of vertical integration from exploring, developing and producing to transporting, refining and marketing. While the commenter implies that it is not a major, no information was provided to support its position.

The Regions believe that, based on the information available at this time, for the geographic area covered by this permit (Gulf of Mexico waters outside the States' territorial seas) very few small operators can afford to lease and operate in this area. The best information available to the Regions indicates that it costs approximately $3.7 million per well to operate in this area. In addition, a substantial capital investment is necessary to drill a well. Large capital expenditures of this nature would preclude "small" businesses from competing in this industry segment.

(20) Comment: One commenter stated that the product substitution rationale had been adopted without consideration of the true costs involved. They concluded that best professional judgment BAT/BCT limitations must include economic consideration by definition. The reduced effectiveness of certain substitute materials (*e.g.*, mineral oil pils for diesel oil pills) was offered by the commenter as an example of the consideration which must be made by EPA. No economic data was submitted by the commenter.

Response: The Agency believes that it has adequately assessed costs associated with product substitution to meet effluent limitations in the final permit. The costs for substitution of mineral oil for diesel oil have been addressed in the Fact Sheet (50 *FR* 30564) and the proposed BAT/NSPS rulemaking. For example, the differential cost of substituting mineral oil for diesel oil is $1.90 per gallon, including storage and maintenance. A typical 10,000 foot well requires 5400 bbl of mud. If mineral oil were substituted as a lubricating agent for diesel in all of the mud at 3 percent, about 6800 gallons of mineral oil would be required, the increased cost due to product substitution would be approximately $13,000. This cost represents about 3.5 percent of the cost of drilling a typical well. This cost is considered to be reasonable to prevent the toxic organics in diesel oil from being discharged, and is economically achievable for the offshore oil industry. No commenter provided information on the costs of product substitution with the exception of mineral oil costs.

The Regions have addressed and evaluated costs associated with product substitution and have made a reasonable determination that they are economically achievable. With the exception of substituting mineral oil for diesel oil, the Regions have no information, not have any commenters offered any information, to indicate significant increase in costs resulting from product substitution.

(21) Comment: Two industry commenters suggested that the following effluent wastestreams should be authorized for discharge by this permit: cement, completion fluids, workover fluids, and packer fluids. These commenters did not state any reasons for wanting inclusion of these wastestreams in the permit.

Response: EPA Regions IV and VI agree that these wastestreams should be limited and authorized for discharge by this permit. Accordingly, the Regions have established a best professional judgment (BPJ) determination that the BCT level of pollutant control for completion fluids, workover fluids, and packer fluids is the no free oil requirement. Since BCT equals BPT the limits pass the BCT cost test. Furthermore, for well treatment (packer) fluids, completion fluids, and workover fluids which are circulated from the platform or mobile vessel through the drill string into the well and back to the platform, the Regions have established a reporting requirement for a monthly estimate of the number of barrels discharged in order to gather further information for future regulatory efforts. Since it is not possible to measure the amount of cement that leaks out of the well bore around the riser pipe, the Regions have decided not to request an estimate of the discharged amount of cement, however, an operator must inspect the surface of the receiving waters for discharge of free oil.

The Regions have also placed a general requirement in the permit prohibiting the discharge of priority

pollutants. The Regions believe that compliance with this requirement can be met by product substitution prior to use of the material, or if priority pollutants must be used, then those materials returned to the surface must be barged ashore for disposal. Since these materials are used in small amounts, the Regions expect that barging and disposal costs will not be excessive.

(22) Comment: EPA should allow the discharge of some well treatment fluids separately from produced water, and separate definitions should be provided for well treatment and completion fluids.

Response: Regions IV and VI agree that separate limits and definitions are needed for these waste streams and have provided the limits and definitions in the final permit. There is no requirement in the permit to treat or discharge well treatment fluids or completion fluids with the produced water. The oil and grease content of produced water is limited to 48 mg/l monthly average and 72 mg/l daily maximum, and the free oil content of well treatment fluids is limited by the no free oil requirement as measured by the visual sheen test. Based on the administrative record for this permit, the Regions believe that well treatment fluids, completion fluids and workover fluids are not susceptible to treatment by an oil water separator and therefore are using the free oil/visual sheen test requirement for these pollutants. The present BPT requirement for well treatment fluids (including completion fluids) is "no free oil." Since the BCT limitation of "no free oil" in the final permit is equal to BPT, all existing sources should currently be achieving this BCT limitation.

The Regions have provided the separate definitions for well treatment and completion fluids in the definitions section (Part III.D.) of the permit. Based on the administrative record of the permit, the Regions believe that these wastestreams are composed of different pollutants and are discharged at different times during the course of drilling a well.

(23) Comment: Several industry commenters stated that monitoring and reporting requirements of the volume of discharged muds, cuttings, deck dainage, produced sand, and sanitary discharges are not necessary. These commenters stated that this information has been reported for four years and that future monitoring and inspection should be deleted since the information has not been used from the previous discharge monitoring reports and the discharges are of little significance. Cities Service stated that the Regions need to document why this information is required. The Offshore Operators Committee stated that removal of this requirement would eliminate a large number of man-hours required to collect, record, and report the data. Exxon suggested that the existing requirement for inventory of total volume of mass of components added should be sufficient for record keeping requirements and for demonstrating that a mud is one of the generic mud types.

Response: Regions IV and VI do not believe that the requirement to make monthly estimates of the volume of these four discharges places a large burden on the operators. Monthly estimates are to be made during one sampling period on any day while discharging any of these wastestreams during the month. The final permit requires the operator to record the volume, weight, or flow of minor discharges, but reporting of this data on the annual discharge monitoring reports (DMR's) is not required. This information is to be kept on file by the operator and the Agency will request the data through the use of Request for Information Letters under section 308 of the Clean Water Act. The Regions are requiring this monitoring because the NPDES regulations require monitoring of any pollutant specifically limited by a permit (40 CFR 122.44(i) and 122.48) to assure compliance with permit limitations. Furthermore, the regulations require monitoring that is representative of the monitoring activity. If a discharge is intermittent in nature, Section 122.45(e) requires carefully described and limited discharges. The Regions believe the permit requirements comply with the regulatory provisions to gather information for regulation development in the future.

(24) Comment: Several environmental commenters suggested that the BPJ determination for this permit should require limitations at least as stringent as those contained in other BPJ permits already issued or proposed for this industry. Several industry commenters stated that a BPJ permit should not be issued prior to promulgation of national effluent limitations guidelines. These commenters were concerned that the BPJ permit would contain limits more stringent than subsequently promulgated guidelines and that EPA's antibacksliding regulations would then prevent relaxation of the BPJ limits.

Response: Under section 402(a)(1) of the Clean Water Act and the implementing regulations at 40 CFR Part 125, Subpart A, EPA must establish permit conditions using BPJ procedures in the absence of effluent limitations guidelines for the offshore subcategory. In developing the BPJ permit conditions, the Regions are required to consider a number of factors, enumerated in section 304(b) such as the age of equipment and facilities, the process employed, and costs of achieving effluent reduction, which may vary from Region fo Region.

The number of operations in the different Regions also will affect decisions regarding the appropriate limitations. For example, Regions IV and VI are not imposing mercury and cadmium limitations in the Gulf of Mexico permit because the Regions do not have adequate information at this time to determine the technological feasibility and economic achievability of such a limitation for the large number of operations in the Gulf of Mexico. By contrast, Region X imposed mercury and cadmium limits on the small number of operations in Alaska because Region X had a complete data base on the types of barite currently used in Alaska drilling operations. Therefore, the Regions, in making the BPJ determinations required by the Act, have necessarily proposed or imposed some conditions which differ from Region to Region.

With regard to the industry comments, all permits issued after July 1, 1984 are required to contain effluent limitations for all categories and classes of point sources which control toxicity pollutants through BAT and which represent BCT for conventional pollutants. Permits in effect after July 1, 1987 must impose effluent limitations which control nonconventional pollutants by means of BAT.

As stated previously, in establishing these limitations the Regions must use BPJ procedures in the absence of promulgated effluent limitations guidelines. These procedures mandate the consideration of factors beyond those required for BPT. As a result, some of the limitations in this permit are more stringent than those contained in the previously issued BPT permit.

Upon the reissuance of this permit, EPA's anti-backsliding regulations at the 40 CFR 122.44(1) will apply. However, for permits where limitations have previously been imposed under section 402(a)(1) of the Act, the regulations provide a number of circumstances under which less stringent permit limits may be allowed in reissued permits. The Regions will consider these factors in determining the appropriate limits to be included in the reissued permit.

(25) Comment: Both the State of Florida, Department of Environmental Regulation and the State of Mississippi, Department of Wildlife Conservation, Bureau of Marine Resources questioned

whether the discharge rate limitation requirement offered adequate protection of the environment. Although the Mississippi DWC found the permit to be consistent with the Mississippi Coastal Zone Management Plan, the State recommended that a limited monitoring program be established within the State's territorial waters for any operations authorized to discharge by this permit within 3000 feet of Mississippi's territorial sea boundary. The State would require corrective actions to prevent further pollution if the monitoring shows unacceptable levels of discharged materials in the State's territorial seas. The Florida DER also recommended that the dispersion of drill mud discharges be monitored to confirm adequate protection. The State would require further reduced flow rates if dispersion is not as efficient as estimated under the discharge rate limitation requirement.

Response: Regions IV and VI believe that discharges in compliance with the discharge rate limitation requirement of this general permit will not adversely affect the waters of the Gulf of Mexico. As discussed in the Final Ocean Discharge Criteria Evaluation (See Administrative Record) the discharge rate limitation requirement is based on protection from toxic discharges for areas of biological concern. Based on available knowledge of the Gulf of Mexico marine environment, the Regions have found that this provision is needed in order to determine that no unreasonable degradation of that environment will occur. If new information is made available to the Regions, the reopener clause in the Final Permit (Part II.A.3) will be used to address necessary changes to this requirement.

(26) Comment: The United States Department of the Interior, Minerals Management Service (MMS) indicated that its consultation with U.S. DOI Fish and Wildlife Service (FWS) and the Department of Commerce National Marine Fisheries Service (NMFS) on compliance with the Endangered Species Act for its activities in the Gulf of Mexico only covered leasing and exploration activities and that the biological opinions issued by the two services were limited to those activities.

Response: The Endangered Species Act (ESA) and its implementing regulations require that each federal agency ensure that its actions do not jeopardize the continued existence of any threatened or endangered species or adversely affect their critical habitats. In its July 1985 proposal the Agency relied on biological opinions resulting from ESA consultations by the Minerals Management Service (MMS) with the Fish and Wildlife Service (FWS) and the National Marine Fisheries Service (NMFS) in discharging its Endangered Species Act obligations in the issuance of a general permit for oil and gas operations in the Gulf of Mexico. The biologial opinion of NMFS addressed the impacts of development and production as well as exploration activities. These biological opinions can be found in Volume 1, section IX.B of the Final Regional EIS (1983). Both agencies concluded that the proposed activities would not jeopardize the continued existence of any listed species or result in the destruction of adverse modification of their critical habitats.

After considering potential impact on the listed species for the Gulf of Mexico, Regions IV and VI have concluded that discharges, in compliance with the BAT/BCT permit limits, from these facilities will not affect any listed species or their critical habitats. FWS made no reference in its comments on the proposal to any Endangered Species Act concerns.

NMFS did not comment on the proposed general permit.

(27) Comment: The OOC requested that the administrative record for the Gulf of Mexico general permit include all the documents from the administrative records for the prior Gulf of Mexico general permit and the general permits issued and proposed by Regions IX and X. Other commenters requested that their comments filed on the Agency's rulemaking to establish national effluent limitations guidelines and standards for the offshore oil and gas extration industry be included in the administrative record of this permit. API requested that, in the alternative, the public comment period for the permit be reopened.

Response: The administrative record for today's final general permit includes all of the documentation that the Regions relied upon in making their determinations with respect to the appropriate conditions to be imposed in the permit. The record includes all of the public comments and attachments filed on the proposed permit, even comments filed several weeks after the close of the comment period on November 6, 1985. Additionally, the Regions included four technical submissions related directly to the permit received from industry representatives in late February and early March 1986. The record also includes substantial technical documentation, much of which was included in the administrative record for the prior Gulf of Mexico permit and in the administrative records for the general permits proposed or issued by Regions IX and X. Regions IV, VI, IX and X and EPA Headquarters have worked in close cooperation in developing all the general permits and have shared the technical information supporting those permits.

The Regions, however, do not believe it is appropriate to grant the OOC's request that all of the documents from the other administrative records be incorporated into the administrative record for the permit being issued today. Regions IV and VI did not consider all of the documents contained in those records during their decisionmaking process on these permits; much of the information in those records does not relate to the Gulf of Mexico. All commenters had the opportunity to submit information to the Regions that the commenters believed to be relevant to their concerns. The OOC submitted extensive comments and included approximately six inches of attachments. If the OOC believed there were other documents relevant to the Regions' decisionmaking process, they should have been submitted to the Regions with appropriate explanations.

API and NRDC submitted duplicate copies to the Regions of comments which they submitted to the Agency in March 1986 on EPA's current national rulemaking for the offshore oil and gas extraction industry. For the following reasons, these duplicate comments, which included several thousand pages by the American Petroleum Institute alone, were not considered by the Regions in the permit proceedings and have not been included in the administrative record for today's general permit.

Public notice of the draft permit was published on July 26, 1985. The comment period, originally scheduled to close on October 7, 1985, was extended until November 6, 1985. During this three and a half month comment period, the Agency received voluminous comments, data, and reports. EPA continued to consider comments received through November 1985, including API comments not filed until November 27. Thereafter, EPA met with industry and environmental representatives in an attempt to fully respond to the concerns raised in specific comments. Four additional reports on these same issues were submitted and considered in connection with these meetings.

In an effort parallel to the development of conditions and limitations for today's final general permit, the Agency has been collecting and analyzing data and comments

received in response to national effluent limitations guidelines, proposed for the offshore subcategory of the oil and gas extraction point source category on August 26, 1985. The Agency currently projects promulgation of final guidelines in 1988. While the development of these guidelines necessarily involves the analysis and resolution of many of the same issues as today's permit, the guidelines development process is a far more massive and time consuming undertaking.

EPA carefully considered the requests by API and NRDC that comments and studies submitted on the proposed national guidelines be considered and included in the administrative record for today's general permit. These materials were not received until the close of the guidelines comment period on March 15, 1986. By that time, Regions IV and VI were close to completing revisions to the draft permit based on the information received directly in connection with the permit proceedings. While the Agency is mindful of the interrelationship between the guidelines development and many of the terms and conditions of today's permit, EPA has concluded that consideration of these materials would result in extensive delay in issuance of the permit. Such a delay would not be consistent with the intent of Congress in mandating the achievement of BAT and BCT by July 1, 1984, nor does the Agency believe that the Administrative Procedure Act (APA) countenances open-ended permit proceedings.

Section 402(a)(1) of the Act authorizes EPA to issue permits upon condition that discharges will meet either all applicable requirements under section 301 (and other sections) or, prior to the taking of necessary implementing actions relating to all such requirements, such conditions as the Administrator determines are necessary to carry out the provisions of the Act. Pursuant to this provision, EPA promulgated regulations providing that, in the absence of effluent limitations guidelines, permit conditions must be established using Best Professional Judgment (BPJ) procedures (40 CFR 122.43, 122.44, and 125.3). Under 40 CFR 125.3, permit writers must condider the factors set forth in section 304 of the Act for BAT and BCT determinations which Regions IV and VI have done in developing this final permit.

Since the original issuance of the BPT permit in 1981, the Agency has amassed a considerable body of knowledge regarding oil and gas operations in the Gulf of Mexico. If the Agency were also required to condider all materials submitted in connection with the guidelines proposal, the BPJ provisions of the statute and regulations would be rendered a nullity. In effect, the Agency would be unable to issue any general permits for the oil and gas industry in compliance with the BAT and BCT provisions of the Act until promulgation of final guidelines. The BPT general permit would therefore remain in effect in spite of the large volume of information the Agency has gathered which supports today's BPJ determinations. EPA does not believe that Congress intended such a result.

In addition, section 558 of the APA imposes certain obligations on the Agency to complete permit perceedings within a reasonable time. Prior to the issuance of today's permit, facilities operating in the in the Gulf of Mexico were authorized to discharge under a general permit, issued on April 3, 1981, which implemented BPT national guidelines. The permit was reissued on September 15, 1983, and was continued past its expiration date of June 30, 1984 by the APA for current lease operators who notified of their intent to be covered prior to June 30, 1984. However, all leaseholders not covered under the BPT permit are not authorized to discharge under the continued BPT permit. Industry has made repeated requests that the Regions issue a new general permit as expeditiously as possible. The Regions currently have over 600 applications for individual permits on file, most of which will be covered by this new general permit. Therefore, the Regions believe that the more reasonable and environmentally sound approach is to issue today's permit with conditions and terms based on the wide range of information which fully supports the Regions' BPJ determinations of BAT and BCT.

In imposing the terms and conditions of today's final permit, Regions IV and VI have carefully balanced the need to issue BAT/BCT permits, as articulated above, with the recognition that not all information available to the Agency through the guidelines development process has been fully analyzed. As a result, the permit issued today reflects, in all cases, technology-based limits which are no more stringent, and in most cases less stringent, than those in the proposed guidelines. The limits in today's final permit are based on information which EPA is confident represents a solid and sufficient data base. Therefore, the Agency believes that the concerns of some commenters that the anti-backsliding regulation could prove unduly burdensome as a result of promulgation of final guidelines are exaggerated.

Finally, for the foregoing reasons, Regions IV and VI do not believe that reopening the comment period for this permit, as requested by API in a letter dated June 26, 1986, would expedite the decisionmaking process. See 40 CFR 124.14. Therefore, the request is denied.

(28) Comment: Several commenters expressed a concern over produced water discharges because there are no data on produced water effects on Eastern Gulf habitat.

Response: The constituents of concern in produced water include total dissolved solids, oxygen demanding wastes, toxic metals, and naturally occurring radioactivity, in addition to oil and grease contaminants. In terms of volume and potential effects, produced water is the most significant component of production well discharges. There are, however, far fewer studies concerning produced water effects compared to the body of data on muds and cuttings. The limited number of total effluent biossays using produced waters from Central Gulf operations indicated a whole effluent toxicity, with 96-hour LC50 concentrations ranging from 8,000–116,000 ppm. Comparable suspended particulate phase concentrations (to provide a comparison to drilling fluid LC50) would be ten times higher.

The National Academy of Sciences report of Drilling Discharges in the Marine Environment states that, in toxicity tests, organisms from any one OCS region appear to be no more sensitive to drilling effluents than comparable ones from any other region, indicating that these results usually may be applied from one region to another. The most significant site specific effects have been documented in areas of minimum dilution potential (shallow, near-shore, low-energy environments).

In addition, the Regions believe that discharges of produced water under this permit in the Eastern Gulf will cause no unreasonable degradation. There will be a minimal number of production wells covered in the Eastern Gulf of Mexico under this permit. Those that are expected to be covered would be the natural gas platforms off Mobile, AL, and gas wells normally have significantly less produced water associated with them than do oil wells. Therefore, the Regions consider the control of the conventional pollutant of oil and grease to be an appropriate control in the offshore federal waters for this discharge.

(29) Comment: The Natual Resources Defense Council expressed the concern that a general permit is not appropriate for the Eastern Gulf of Mexico, based on the variation and uniqueness of the

coastal and marine resources of the area and the lack of information on the potential effects of the drilling discharges.

Response: The Regions disagree, and continue to support the general permit approach. The basis of the limits contained in the general permit would be the same for individual permits in most instances. As a result, most individual permits that would be issued under "ordinary" conditions (not adjacent to areas of biological concern) would contain the same discharge provisions as now required under the general permit. The main purpose of a general permit is to relieve the administrative burden of issuing many individual permits, all containing similar requirements. In cases where there may be cause to require more stringent limits, the general permit provides a mechanism for addressing this situation (i.e., the requirement to regulate the rates of discharge of drilling fluids near areas of biological concern). Even in the most controversial situations, there remains the option to request an individual permitting action for a specific operation. General permits have proven effective in other operational areas containing unique and variable sensitive marine resources: specifically in federal waters off Alaska and California. Therefore, the Regions support the general permit approach to regulate the majority of operational discharges that would receive the same effluents limits under an individual permit, while providing mitigation of effects in areas of concern.

(30) Comment: Nearly all commenters suggested that some clarification is needed in regard to the designation of areas of biological concern in the Eastern Gulf of Mexico. The position expressed by the industry and others is that some quantitative and qualitative criteria of "significance" needs to be developed regarding implementation of the discharge rate control, in order to avoid as one commenter sugested, "literal interpretation of the definition of areas of biological concern which would require the limitation of discharge rates within 2000 meters of a single sponge".

Response: Until sufficient data are acquired on the appropriate application of mitigative measures and their effectiveness in the Eastern Gulf's different live-bottom topography and biota, as compared to that in the Central and Western Gulf, the regulation of discharges in this frontier area needs to remain on the side of caution in order to ensure no unreasonable degradation occurs. Therefore, EPA is proposing to continue the procedure for implementing the discharge rate control under the general permit in the Eastern Gulf of Mexico that is currently followed for individual permits issued near areas of biological concern. Lease stipulations in the Eastern Gulf, specified by MMS, require that live bottom surveys be performed on lease blocks in water depths of 100 meters or less for exploratory drilling and in depths of 200 meters or less for development and production operations. The results of the surveys are part of the Plan of Exploration (or Development or Production). These Plans are submitted to MMS for approval. The affected States are also requested to provide a consistency determination of the Plan with their respective Coastal Zone Management Plans. Should "live bottom" (as defined by MMS in their Environmental Impact Statements) be encountered, consultation with MMS, EPA and the affected State (as related to CZMA) will be required to determine, collectively, on a site specific basis, if the discharge rate control provision is appropriate. Criteria relating to the composition, density and topographical conformation of the biota at each given site will be used in this case-by-case determination.

(31) Comment: Most industry commenters expressed the position that the discharge rate control is unjustified to protect areas of biological concern. Their position is that impacts from muds and cuttings discharges are mostly confined to the area within a few hundred meters of the discharge.

Response: The regulation of discharge rates near areas of biological concern is being proposed under the statutory authority of Section 403(c) of the Clean Water Act (CWA). This section requires the Regional Administrator(s) to determine, based on an Ocean Discharge Criteria Evaluation (ODCE), whether or not the discharge will cause "unreasonable degradation" of the marine environment. The Regions have evaluated the proposed discharges using the required criteria and have determined that there is insufficient information to conclude that full-rate discharges adjacent to areas of biological concern will not cause unreasonable degradation (see Ocean Discharge Criteria Evaluation—Gulf of Mexico).

As to the area in which muds and cuttings may have an impact, available information indicates that the potential for impacts may be broader than suggested by the commenters. In a reference cited by the Offshore Operators Committee (Boothe, P.N., Presley, J.G., Distribution and Behavior of Drilling Fluids and Cuttings Around Gulf of Mexico Drilling Sites), one of the findings was that "excess" barite (define as 2 times background concentrations or greater) was found in twenty-five of thirty stations monitored at distances of 3,000 meters from the drill site. Barite is a commonly used tracer for indicating drilling mud distribution. This result indicates that it is by no means conclusive that drilling mud and cuttings accumulations do not extend beyond the immediate vicinity of the drill site in harmful concentrations. Therefore, an equation has been developed that describes dispersion ratios (sample concentration/ambient concentration) as a function of discharge rate and transport time in order to achieve an acceptable toxicity criterion at a specified distance from an area of concern. With this mitigating method, the discharges will not cause unreasonable degradation to the marine environment. This provision is discussed in greater detail in the response to Comment 32 concerning shunting.

(32) Comment: Several industrial commenters stated that the discharge rate is improper at the Flower Gardens, because extensive data on drilling fluids indicate a lack of impact in this area. Generally, these commenters take the position that the "no activity" area is an improper boundary for imposing the discharge rate control at the Flower Gardens because of the effectiveness of the shunting requirement imposed by MMS.

Response: The Regions have revised their position on requiring the discharge rate control in the Central and Western Gulf of Mexico. The comments received on the application of the discharge rate control cited a general agreement that MMS-imposed live bottom lease stipulations have, on a theoretical and empirical basis, proven to be adequate and effective mitigative measures around topographically high relief areas in the Central and Western Gulf of Mexico, and that the discharge rate control would be an unnecessary restriction in these areas. In reviewing the references cited in these comments, the data indicate that, under the conditions where MMS has historically required shunting the discharges to a nepheloid layer, 99.9% of the discharged material will be confined to this depositional zone and will not migrate onto the more sensitive and diverse areas on the upper portion of the banks. Where the areas of "no activity" have been designated in the Central and Western Gulf of Mexico, and when MMS has stipulated a shunting requirement for dischargers within the

"1-mile" or "3-mile" zone of the "no activity" area, EPA will not require an additional discharge rate control of the shunted muds. The "no activity" areas were established by MMS to provide protection to some of the most unique and diverse communities in the Central and Western Gulf. There are areas in the Flower Garden (the South Texas Banks), however, that are of lower topographical relief, that are less diverse and appear to be somewhat more tolerant of sediment loadings. The MMS has established "no activity" areas in these locations also. However, MMS does not require shunting in areas adjacent to these specific "no activity" areas where there is lower topographical relief and shunting would be less effective. EPA has determined pursuant to section 403(c) that, in those individual cases where a drill site is within 544 meters of the "no activity" area (with a 30,000 ppm toxicity limit), and MMS is not requiring shunting, the muds discharge will be subject to the discharge rate control.

If an operator is within a 544 meter zone subject to the discharge rate restriction based upon the 30,000 ppm toxicity requirement, and would be willing to accept a more stringent toxicity limit, the Regions will accommodate a proposal to develop a specific distance/toxicity based requirement. If an operator is limited to a 30,000 ppm toxicity value and, for example, is within 400 meters of an area of biological concern, then his discharge rate would be subject to a 360 bbl/hr limitation. If the operator determines he could comply with a more stringent toxicity limit in order to increase the discharge rate allowance, then a specific rate limit, distance-based toxicity requirement can be generated from the equation:

$$R = 10\ [3 \log (d/15) - T_t]$$

where R = discharge rate (bbl/hr.)
d = distance (meters) from boundary
T_t = toxicity-based discharge rate term,

$$= [\log (LC50 \times 8 \times 10^{-6})] / 0.3657$$

Thus, if the opertor desires a full 1,000 bbl/hr rate at 400 meters from the boundary of the area of biological concern, then he would be required to meet a 96 LC50 toxicity limit of 43,000 ppm.

The application of discharge rate control is flexible, and its provisions can be "fine-tuned" to meet specific requirements of the operator and still provide sufficient protection to areas of biological concern. We believe this approach will be the most consistent one for live bottom protection in the majority of situations Gulf-wide. In areas where implementation is not so clear-cut, there remains the option, at the request of the applicant, EPA, or any group or individual, to process an individual permit specifically designed for the area in question.

(33) Comment: Several chapters of the Sierra Club stated that EPA should not assign MMS sole responsibility for identifying live bottom areas.

Response: As discussed previously in responses to comments on live-bottom determination, MMS, EPA and the affected State will determine if live-bottom in the Eastern Gulf of Mexico, as *defined* by MMS, is significant from the standpoint of requiring the regulation of discharge rates based on the distance of the drill site to these areas. For the purpose of lease stipulations, Minerals Management Service defines "live-bottom areas" as those areas which contain biological assemblages consisting of such sessile invertebrates as sea fans, sea whips, hydroids, anemones, ascidians, sponges, bryozoans, seagrasses, or corals living upon and attached to naturally occurring hard or rocky formations with rough, broken, or smooth topography; or whose lithotope favors the accumulation of turtles, fishes, and other fauna. Florida has developed a successful program for reviewing the live-bottom surveys in order to determine consistency of the plan of exploration with their Coastal Zone Management Plan. For a number of individual permits in the Eastern Gulf of Mexico, live bottom areas were specifically designated and mitigative measures required for approval were negotiated, including environmental monitoring, drill site relocation, discharge rate controls and others.

This process for individual permits has worked effectively and it will continue to work in a similar manner under the general permit. The only difference will be that once the requirements for live-bottom mitigation are negotiated, the discharger may be covered under the general permit if the mitigation measure is to use the discharge rate control. If environmental monitoring is required, an individual permit will have to be issued.

(34) Comment: Several commenters objected to the use of the discharge rate control around the State territorial waters of Mississippi and Alabama. A reason cited for the objection is that there is no idenified areas of biological concern to justify imposition of this control.

Response: The basis for requiring the discharge rate control near the State water boundaries is, not specifically to provide mitigation for live bottom areas, but to provide Mississippi and Alabama with a "buffer zone" for their state policies of no discharge from oil and gas operations in State waters. In order to provide an avenue for these States to determine whether the general permit would be consistent with their Coastal Zone Management Plans, the Regions needed to implement restrictions on discharges that would assure the States that these effluents would not reach State waters in significant amounts. The discharge rate control was developed, and EPA determined that its use as a buffer would be appropriate; in this instance, not as a "live bottom" protective measure, but as a CZMA consistency requirement to recognize the no discharge policies. After the draft general permit was published, both Mississippi and Alabama participated in negotiations with the industry that would allow discharges to their respective territorial waters. These discharges to State waters are only being considered for areas outside the barrier islands and would be subject to comprehensive environmental monitoring requirements. Recently, Mississippi issued an individual permit allowing discharges from an exploratory operation to State waters. At this time, Alabama is still considering several individual permit applications that would allow discharges outside the barrier islands. Alabama has also approved a comprehensive, multi-disciplinary three year monitoring study designed to detect impacts to Alabama waters from oil and gas activities. Therefore, with this study in place, EPA has determined that the discharge rate control provisions as a buffer for Alabama waters can be dropped, with the stipulation that should the study detect unacceptable impacts from these activities, these discharge provisions could be reinstated through a permit

modification. In the absence of such a study in Mississippi waters, and since the State specifically referenced the discharge rate control as a CZMA consistency requirement, EPA will retain the rate control as a buffer to Mississippi waters. However, since EPA has modified the toxicity limit on which the rate curve is based to a more stringent requirement (30,000 ppm as opposed to 7,400 ppm in the draft permit), the distance at which the discharger must begin controlling the rate of discharge has changed. The new "buffer" will be within 544 meters when a 30,000 ppm toxicity limit is required. The discharger still has the option to request coverage under an individual permit in which case a monitoring plan or a new toxicity/distance based buffer zone requirement could be developed and approved.

(35) Comment: The Offshore Operator Committee (OOC) and Marathon Oil commented on the burdensome aspect of the 1000 bbl/hr maximum discharge rate for drilling muds. They also feel the reporting requirements for the estimated rates of discharge are not justified.

Response: The commenters agree that the limitation is not a serious operational problem, and that the limit would rarely be exceeded. Furthermore, in instances where there is cause to empty the mud tanks rapidly (in preparation for a hurricane, or similar cause), this action would be covered under the emergency by-pass provisions. As stated in the fact sheet, all the reliable dispersion studies available to the agency are limited to 1000 bbl/hr or less. Additionally, any NPDES permitted discharges routinely require some form of estimating or measuring the rate at which the discharge occurs. 40 CFR 122.45(e) considers reporting of discharge rates, among other requirements, particularly appropriate for non-continuous discharges. Therefore, the Regions will retain the 1000 bbl/hr maximum rate limitation along with the reporting requirements of the estimated rate of discharge for drilling muds.

(36) Comment: A commenter stated that the no discharge requirement in areas of biological concern is unwarranted for minor discharges.

Response: In the Central and Western Gulf of Mexico, the areas of biological concern are equated to the "no activity area" designations by Minerals Management Service (MMS) in their lease stipulations. No structures, drilling rigs, anchoring or pipelines are allowed within these areas. Consequently, no discharges are allowed within them. Shunting or other mitigative techniques are allowed for discharges in adjacent areas.

In the Eastern Gulf, there are no predesignated areas of "no activity". Live bottom surveys are required, and areas of biological concern are individually designated upon review of these surveys by MMS, EPA and the affected states. No discharge will be allowed within these areas. The muds and cuttings will be regulated by the discharge rate control in areas adjacent to the area of biological concern (basis—Section 403(e)). The minor discharges will be regulated by the specific "no discharge of free oil" requirement in these adjacent areas. Thus, there is no oil and gas activity of any kind allowed *within* "no activity" areas, as required by MMS lease stipulation or *within* an area of biological concern as designated by MMS, EPA and the affected state, there is not a "no discharge" requirement for minor discharges, as suggested by the comment, in areas adjacent to these areas of concern.

(37) Comment: Conoco submitted several comments on the NPDES regulatory "boilerplate" requirements of the permit (*e.g.:* extension of discharge monitoring report due date; deletion of the reportable quantity requirement of Part II.D.8 of the permit; deletion of the 90 day time limit for requesting an individual permit).

Response: The Regions have reviewed these comments submitted by Conoco and the NPDES regulations in 40 CFR Parts 122 and 124. Copies of the complete comment summary and response are found in the comment document contained in the administrative record for this final permit. Because the Regions have either made no changes, or only corrected typographical errors pointed out by this commenter, these comments and responses are not being published today.

The only changes made as a result of these comments were that the Regions agreed to delete the provisions of the definition for daily discharge having to do with mass discharges and composite samples since these terms are not needed by the permit.

[Permit No. GMG280000]

Authorization To Discharge Under the National Pollutant Discharge Elimination System

In compliance with the provisions of the Federal Water Pollution Control Act, as amended (33 U.S.C. 1251 et. seq; the "Act"), Operators of lease blocks in the Offshore Subcategory of the Oil and Gas Extraction Point Source Category, located seaward of the outer boundary of the territorial seas off the States bordering the Gulf of Mexico, are authorized to discharge to receiving waters named the Gulf of Mexico seaward of the outer boundary of the territorial seas in accordance with effluent limitations, monitoring requirements, and other conditions set forth in Parts I, II, and III hereof.

Operators of lease blocks within the general permit area must make a written notification to the appropriate Regional Administrator that they intend to be covered by this general permit (See Part II.E.1.). Unless otherwise notified in writing by the Regional Administrator after submission of the notification, owners or operators requesting coverage are authorized to discharge under this general permit. Operators are authorized to discharge once they have satisfied the notification requirements of Part II.E. Operators of lease blocks within the general permit area who fail to notify the Regional Administrator of their intent to be covered by this general permit are not authorized under this general permit to discharge from those facilities to the receiving waters named.

This permit does not authorize discharges from "new sources" as defined in 40 CFR 122.2.

This permit shall become effective at 1 PM Eastern Daylight Savings Time on Wednesday, July 2, 1986.

This permit and the authorization to discharge shall expire at midnight Eastern Daylight Savings Time, July 1, 1991.

Signed this 27th day of June, 1986.

Myron O. Knudson, P.E.,

Director, Water Management Division (6W), Region VI.

Signed this 27th day of June, 1986.

Bruce R. Barrett,

Director, Water Management Division (4W), Region IV.

Part I—Requirements for NPDES Permits

Section A. Effluent Limitations and Monitoring Requirements

1. During the period beginning on the effective date and lasting through the date of expiration, the permittee is authorized to discharge DRILLING FLUIDS.

Such discharges shall be limited and monitored by the permittee as specified below:

Effluent characteristic	Discharge limitation	Monitoring requirements		Recorded value(s)
		Measurement frequency	Sample type/ method	
Free oil	No free oil	Once/day [1]	Visual/sheen on receiving water.	Number of days sheen observed.
Toxicity [2] 96-hour LC50	30,000 ppm daily minimum [3].	Once/month	Grab	96-hour LC50.
		Once/end of well [4]	Grab	96-hour LC50.
	30,000 ppm monthly average minimum [3].	Once/month	Grab	96-hour LC50.
Discharge rate	1,000 barrels/hour	Once/hour [1]	Estimate	Maximum hourly rate.
Discharge rate for controlled discharge rate areas [5].	(see Figure 1.)	Once/hour [1]	Measure	Maximum hourly rate.
Oil content		Once/day [1]	Grab/Retort [6]	Percent oil.[7]
Volume (barrels)		Once/month	Estimate	Monthly total.[7]

[1] When discharging; discharge is authorized only during times when visual sheen observation is possible for muds to which any oil has been added to the mud system for any reason (unless an alternative test procedure has been approved).
[2] Suspended particulate phase with *Mysidopsis bahia* following approved test method. The sample shall be taken beneath the shale shaker. See part III.B.2.
[3] Under certain circumstances an alternative toxicity limitation may be requested from the appropriate Regional Administrator. see Part III.C.
[4] Sample shall be taken when maximum well depth is reached.
[5] See Part I.A.1.(g) and Appendix A, Figure 1.
[6] See Part III.B.3; percent oil shall be recorded for the same drilling fluid as monitored for visual sheen.
[7] This information shall be recorded, but not reported unless otherwise requested by EPA.

(a) *Oil Based Drilling Fluids Discharge Prohibition*

The discharge of oil-based drilling fluids, and inverse emulsion drilling fluids is prohibited.

(b) *Oil Contaminated Drilling Fluids Discharge Prohibition*

The discharge of drilling fluids which contain waste engine oil, cooling oil, gear oil, or any lubricants which have been previously used for purposes other than borehole lubrication, is prohibited.

(c) *Diesel Oil Discharge Prohibition*

If diesel oil is added to the drilling fluid, the drilling fluid may not be discharged unless:

1. the diesel oil is added as a pill in an attempt to free stuck pipe only,

2. the diesel oil pill and at least 50 barrels of drilling fluid on either side are removed from the active drilling fluid system and not discharged to waters of the United States, and

3. samples of the drilling fluid after pill removal and additional data are provided to EPA in accordance with the requirements of the Diesel Pill Monitoring Program (DPMP). This DPMP shall not apply either in areas where the discharge rate is subject to a discharge of less than 1000 barrels per hour control due to proximity to areas of biological concern or in areas where shunting is required by MMS lease stipulation. In such areas drilling fluids to which diesel oil was added may not be discharged.

(d) *Diesel Pill Monitoring Program*

The DPMP (item (c) 3. above) will be in effect for one year from the permit effective date unless extended for up to an additional year by the Regional Administrators. All effluent limitations of this Part A.1. except toxicity shall apply during this sampling program. The toxicity of the drilling fluid prior to spotting shall be determined following the procedures of this section A.1. for the purpose of compliance. During the DPMP, if residual diesel oil is discharged in compliance with item (c) above, the monthly and end of well toxicity testing will be required for reporting purposes only as part of the Diesel Pill Monitoring Program. At the conclusion of this sampling program, items (c) 1. and (c) 2. above shall apply, subject to all limitations, including toxicity, specified in this Part A.1.

Participation in the DPMP shall be identified for any toxicity test conducted during the DPMP.

(e) *Drilling Fluids Inventory*

The permittee shall maintain a precise chemical inventory of all constituents and their total volume or mass added downhole for each well.

(f) *Applicability*

All discharged drilling fluids, including those fluids adhering to cuttings, must meet the limitations of this Section A.1., except that discharge rate limitations do not apply before intallation of the marine riser.

(g) Discharge Rate Limitation

For those facilities subject to the discharge rate limitation requirement (Section A.1.), the discharge rate [1] of drilling fluids shall be determined as follows:

Discharge Rate Equation: $R=10^{[3\log(d/15)T_t]}$

where:

R = discharge rate (bbl/hr)

d = distance (meters) from the boundary of a controlled discharge rate area

T_t = toxicity-based discharge rate term, $=[\log(LC50 \times 8 \times 10^{\times 6})/0.3657$

1. for the Eastern Gulf of Mexico [2]: Drilling fluids discharges equal to or less than 544 meters [3] from areas of biological concern, as designated by MMS, EPA and the affected State, or within 544[1] meters of territorial seas of Mississippi, shall comply with the discharge rate obtained from the equation above.

2. for the Central and Western Gulf of Mexico [2] Drilling fluids discharges equal to or less than 544[3] meters from areas of biological concern shall comply with the discharge rate obtained from the equation above except, drilling fluids discharges which are shunted to the bottom as required by MMS lease stipulation, are not subject to this discharge rate control requirement.

2. During the period beginning on the effective date and lasting through the date of expiration, the permittee is authorized to discharge DRILL CUTTINGS.

Such discharges shall be limited and monitored by the permittee as specified below:

Effluent characteristic	Discharge limitation	Monitoring requirements		Recorded value(s)
		Measurement frequency	Sample type/ method	
Free oil	No free oil	Once/day[1]	Visual/sheen on receiving water.	Number of days sheen observed.
Volume (barrels)		Once/month	Estimate	Monthly total.[2]

[1] When discharging.
[2] This information shall be recorded, but not reported unless otherwise requested by EPA.

(a) *Cuttings From Oil Based Drilling Fluids Discharge Prohibition.* The discharge of cuttings, produced when using oil based or inverse emulsion drilling fluids, is prohibited.

(b) Discharge is authorized only during times when visible sheen observation is possible for cuttings from muds to which any oil has been added to the mud system for any reason (unless an alternative test procedure has been approved).

3. During the period beginning on the effective date and lasting through the date of expiration, the permittee is authorized to discharge the effluents listed in the following table. Such discharges shall be limited and monitored by the permittee as specified below:

Discharge and effluent characteristic	Discharge limitation	Monitoring requirements		Recorded value(s)
		Measurement frequency	Sample type/ method	
Deck drainage:				
Free oil	No free oil	Once/day [1]	Visual/sheen on receiving water.	Number of days sheen observed.
Volume (barrels)		Once/month	Estimate	Monthly total [2].
Produced water:				
Oil and grease	72 mg/1 daily max., 48 mg/1 monthly avs..	Once/month	Grab [3]	Daily maximum and monthly average.

[1] See Figure 1 for a graph relating mud toxicity and distance from an area of biological concern to the discharge rate allowed for drilling fluids.

[2] See description, Part II, Section C.5. for boundary.

[3] Based on a mud toxicity of 30,000 ppm.

Discharge and effluent characteristic	Discharge limitation	Monitoring requirements		Recorded value(s)
		Measurement frequency	Sample type/ method	
Flow (MGD)		Once/month	Estimate	Monthly average.
Produced sand:				
Free oil	No free oil	Once/day [4]	Visual/sheen on receiving water.	Number of days sheen observed.
Weight (lbs)		Once/month	Estimate	Monthly total [2].
Well treatment fluids,[5] completion fluids,[5] Workover fluids [2]				
Free oil	No free oil	Once/day [4]	Visual/sheen on receiving water.	Number of days sheen observed.
Volume (barrels)		Once/month	Estimate	Monthly total [2].
Sanitary waste [6] (continuously manned by 10 or more persons):				
Residual chlorine [7]	1 mg/1	Once/month	Grab	Concentration.
Flow (MGD)		Once/month	Estimate	Monthly average [2].
Sanitary waste (continuously manned by 9 or fewer persons or intermittently by any number):				
Solids	No floating solids	Once/day	Observation [8]	Number of days solids observed.
Domestic waste:				
Solid	No floating solids	Once/day	Observation [8]	Number of days solids observed.
Desalinization unit discharged; Blowout preventer fluid; Uncontaminated ballast water; Uncontaminated bilge water; Mud, cuttings and cement at the seafloor; Uncontaminated seawater; Boiler Blowdown; Source water and sand:				
Free oil	No free oil	Once/day [4]	Visual/sheen on reveiving water surface.	Number of days sheen observed.

[1] When discharging and facility is manned. Monitoring shall be accomplished during daylight by visual observation of the receiving water surface in the vicinity of the discharge.
[2] This information shall be recorded, but not reported unless otherwise requested by EPA.
[3] May be based on the arithmetic average of four grab sample results in the twenty-four hour period. The Regional Administrator may approve an alternative test method on a case-by-case basis.
[4] When discharging. Monitoring shall be accomplished during daylight by visual observation of the receiving water surface in the vicinity of the discharge.
[5] No discharge of priority pollutants except in trace amounts. Information on the specific chemical composition shall be recorded, but not reported unless requested by EPA.
[6] Any facility which property operates and maintains a marine sanitation device (MSD) that complies with pollution control standards and regulations under Section 312 of the Act shall be deemed to be in compliance with permit limitations for sanitary waste. The MSD shall be tested yearly for proper operation and test results maintained at the facility.
[7] Hach method CN-66-DPD approved. Mininum of 1 mg/1 and maintained as close to this concentration as possible.
[8] Monitoring shall be accomplished during daylight by visual observation of the surface of the receiving water in the vicinity of sanitary and domestic wate outfalls. Observations shall be made following either the morning or mid-day meals and at a time during daylight and maximum estimated discharge.

Section B. Other Discharge Limitations

1. *Floating Solids or Visible Foam*

There shall be no discharge of floating solids or visible foam in other than trace amounts.

2. *Halogenated Phenol Compounds*

There shall be no discharge of halogented phenol compounds.

3. *Surfactants, Dispersants, and Detergents*

The discharge of surfactants, dispersants, and detergents shall be minimized except as necessary to comply with the safety requirements of the Minerals Management Service.

4. *Rubbish, Trash and Other Refuse*

The discharge of any solid material not in compliance with together parts of this permit is prohibited. Incineration residue from paper and plastic only is exempt from this prohibition.

5. *Areas of Biological Concern*

There shall be no discharge in areas of biological concern.

Part II—Standard Conditions for NPDES Permits

Section A. General Conditions

1. *Duty to Comply*

The permittee must comply with all conditions of this permit. Any permit non-compliance constitutes a violation of the Clean Water Act and is grounds fo enforcement action; or for requiring a permittee to apply for and obtain an individual NPDES Permit.

2. *Penalties for Violations of Permit Conditions*

The Clean Water Act provides that any person who violates a permit condition implementing sections 301, 302, 306, 307, 308, 318, or 405 of the Clean Water Act is suject to a civil penalty not to exceed $10,000 per day of such violation. Any person who willfully or negligently violates permit conditions implementing sections 301, 302, 306, 307, or 308 of the Clean Water Act is subject to a fine of not less than $2,500 nor more than $25,000 per day of violation, or by imprisonment for not more than 1 year, or both.

3. *Permit Actions*

This permit may be modified, revoked and reissued, or terminated for cause including, but not limited to, the following:

a. Violation of any terms or conditions of this permit; or

b. Obtaining this permit by misrepresentation or failure to disclose fully all relevant facts; or

c. A change in any condition that requires either a temporary or a permanent reduction or elimination of the authorized discharge; or

d. A determination that the permitted activity endangers human health or the environment and can only be regulated to acceptable levels by permit modification or termination.

The filing of a request by the permittee for a permit modification, revocation and reissuance, or termination, or a notification of planned changes or anticipated noncompliance, does not stay any permit condition.

In accordance with regulations promulgated under section 403 (40 CFR 125.123(d)(4)) of the Clean Water Act, this permit shall be modified or revoked at any time if, on the basis of any new data, the Regional Adminsitrator determines that continued discharges may cause unreasonable degradation of the marine environment.

This permit shall be modified, or alternatively, revoked and reissued, to comply with any applicable effluent standard or limitation issued or approved under section 301, 304, and 307 of the Clean Water Act, if the effluent standard or limitation so issued or approved:

a. Contains different conditions or limitations than any in the permit; or,

b. Controls any pollutant not limited in the permit.

The permit as modified or reissued under this paragraph shall also contain any other requirements of the Act then applicable.

4. *Toxic Pollutants*

Notwithstanding section A, paragraph 3 above, if any toxic effluent standard or prohibition (including any schedule of compliance specified in such effluent standard or prohibition) is promulgated under section 307(a) of the Clean Water Act for a toxic pollutant which is present in the discharge and that standard or prohibition is more stringent than any limitation on the pollutant in this permit, this permit shall be modified or revoked and reissued to confrom to the toxic effluent standard or prohibition and the permittee so notified.

The permittee shall comply with effluent standards or prohibitions established under section 307(a) of the Clean Water Act for toxic pollutants within the time provided in the regulations that established those standards or prohibitions, even if the permit has not yet been modified to incorporate the requirement.

5. *Civil and Criminal Liability*

Except as provided in permit conditions by "Bypassing" section B, paragraph 4.b. and "Upsets" sections B, paragraph 5.b., nothing in this permit shall be construed to relieve the permittee from civil or criminal penalties for noncompliance.

6. *Oil and Hazardous Substance Liability*

Nothing in this permit shall be construed to preclude the institution of any legal action or relieve the permittee from any responsibilities, liabilities, or penalties to

which the permittee is or may be subject under section 311 of the Clean Water Act.

7. *State Laws*

Nothing in this permit shall be construed to preclude the institution of any legal action or relieve the permittee from any responsibilities, liabilities, or penalties established pursuant to any applicable State law or regulation under authority preserved by section 510 of the Clean Water Act.

8. *Property Rights*

The issuance of this permit does not convey any property rights of any sort, or any exclusive privileges, nor does it authorize any injury to private property or any invasion of personal rights, nor any infringement of Federal, State, or local laws of regulations.

9. *Severability*

The provisions of this permit are severable, and if any provision of this permit or the application of any provision of this permit to any circumstance is held invalid, the application of such provision to other circumstances, and the remainder of this permit, shall not be affected thereby.

10. *Definitions*

The following definitions shall apply unless otherwise specified in this permit:

a. "Daily Discharge" means the discharge of a pollutant measured during a calendar day or any 24-hour period that reasonably represents the calendar day for purposes of sampling. For pollutants with limitations expressed in units other than mass, the "daily discharge" is calculated as the average measurement of the pollutant over the sampling day. When grab samples are used, the "daily discharge" determination of concentration shall be the arithmetic average (weighted by flow value) of all samples collected during that sampling day.

b. "Monthly Average" discharge limitation means the highest allowable average of "daily discharges" over a calendar month, calculated as the sum of all "daily discharges" measured during a calendar month divided by the number of "daily discharges" measured during that month.

c. "Daily Maximum" discharge limitation means the highest allowable "daily discharge" during the calendar month.

d. "Daily Minimum" discharge limitation means the lowest allowable 96-hour LC50 value for the discharge measured during a calendar day or any 24-hour period that reasonably represents the calendar day for purposes of sampling.

e. "Monthly Average Minimum" discharge limitation means the lowest allowable average of measured 96 hour LC50 values over a calendar month, calculated as the sum of all 96 hour LC50 values measured during a calendar month, divided by the number of 96 hour LC50 values measured during that month, from one well.

Section B. Operation and Maintenance of Pollution Controls

1. *Proper Operations and Maintenance*

The permittee shall at all times properly operate and maintain all facilities and systems of treatment and control (and related appurtenances) which are installed or used by the permittee to achieve compliance with the conditions of this permit. Proper operation and maintenance also includes adequate laboratory controls and appropriate quality assurance procedures. This provision requires the operation of backup or auxiliary facilities or similar systems which are installed by a permittee only when the operation is necessary to achieve compliance with the conditions of the permit.

2. *Need to Halt or Reduce not a Defense*

It shall not be a defense for a permittee in an enforcement action that it would have been necessary to halt or reduce the permitted activity in order to maintain compliance with the conditions of this permit.

3. *Duty to Mitigate*

The permittee shall take all reasonable steps to minimize or prevent any discharge in violation of this permit which has a reasonable likelihood of adversely affecting human health or the environment.

4. *Bypass of Treatment Facilities*

a. Definitions

(1) "Bypass" means that intentional diversion of waste streams from any portion of a treatment facility.

(2) "Severe property damage" means substantial physical damage to property, damage to the treatment facilities which causes them to become inoperable, or substantial and permanent loss of natural resources which can reasonably be expected to occur in the absence of a bypass. Severe property damage does not mean economic loss caused by delays in production.

b. Bypass not exceeding limitations.

The permittee may allow any bypass to occur which does not cause effluent limitations to be exceeded, but only if it also is for essential maintenance to assure efficient operation. These bypasses are not subject to the provisions of section B, paragraphs 4.c. and 4.d. of this section.

c. Notice

(1) Anticipated bypass. If the permittee knows in advance of the need for a bypass, it shall submit prior notice, if possible at least ten days before the date of the bypass.

(2) Unanticipated bypass. The permittee shall submit notice of an unanticipated bypass as required in section D, paragraph 6 (24-hour notice).

d. Prohibition of bypass.

(1) Bypass is prohibited, and the Regional Administrator may take enforcement action against a permittee for bypass, unless:

(a) Bypass was unavoidable to prevent loss of life, personal injury, or severe property damage;

(b) There were no feasible alternatives to the bypass, such as the use of auxiliary treatment facilities, retention of untreated wastes, or maintenance during normal periods of equipment downtime. This condition is not satisfied if adequate back-up equipment should have been installed in the exercise of reasonable engineering judgment to prevent a bypass which occurred during normal periods of equipment downtime or preventive maintenance; and

(c) The permittee submitted notices as required under section B, paragraph 4.c.

(2) The Regional Administrator may approve an anticipated bypass, after considering its adverse effects, if the Regional Administrator determines that it will meet the three conditions listed above in section B, paragraph 4.d.(1).

5. *Upset Conditions*

a. Definition. "Upset" means an exceptional incident in which there is unintentional and temporary noncompliance with technology-based permit effluent limitations because of factors beyond the reasonable control of the permittee. An upset does not include noncompliance to the extent caused by operational error, improperly designed treatment facilities, inadequate treatment facilities, lack of preventive maintenance, or careless or improper operation.

b. Effect of an upset. An upset constitutes an affirmative defense to an action brought for noncompliance with such technology-based permit effluent limitations if the requirements of section B, paragraph 5.c. are met. No determination made during administrative review of claims that noncompliance was caused by upset, and before an action for noncompliance, is final administrative action subject to judicial review.

c. Conditions necessary for a demonstration of upset. A permittee who wishes to establish the affirmative defense of upset shall demonstrate, through properly signed, contemporaneous operating logs, or other relevant evidence that:

(1) An upset occurred and that the permittee can identify the cause(s) of the upset;

(2) The permitted facility was at the time being properly operated;

(3) The permittee submitted notice of the upset as required in section D, paragraph 6; and,

(4) The permittee complied with any remedial measures required under section B, paragraph 3.

d. Burden to proof. In any enforcement proceeding the permittee seeking to establish the occurrence of an upset has the burden of proof.

6. *Removed Substances*

Solids, sludges, filter backwash, or other pollutants removed in the course of treatment or control of wastewaters shall be disposed of in a manner such as to prevent any pollutant from such materials from entering navigable waters. Any substance specifically listed within this permit may be discharged in accordance with specified conditions, terms, or limitations, *e.g.*, produced sand.

Section C. Monitoring and Records

1. *Representative Sampling*

Samples and measurements taken as required herein shall be representative of the volume and nature of the monitored discharge.

2. *Flow Measurements*

Appropriate flow measurement devices and methods consistent with accepted scientific practices shall be selected and used to ensure the accuracy and reliability of measurements of the volume of monitored discharges. The devices shall be installed, calibrated, and maintained to insure that the accuracy of the measurements are consistent with the accepted capability of that type of device. Devices selected shall be capable of measuring flows with a maximum deviation of less than +10% true discharge rates

throughout the range of expected discharge volumes. Guidance in selection, installation, calibration, and operation of acceptable flow measurement devices can be obtained from the following references:

a. "A Guide to Methods and Standards for the Measurement of Water Flow", U.S. Department of Commerce, National Bureau of Standards, NBS Special Publication 421, May 1975, 97 pp. (Available from the U.S. Government Printing Office, Washington, D.C. 20402. Order by SD catalog No. C13.10:421).

b. "Water Measurement Manual", U.S. Department of the Interior, Bureau of Reclamation, Second Edition, Revised Reprint, 1974, 327 pp. (Available from the U.S. Government Printing Office, Washington, D.C. 20402. Order by Catalog No. I27.19/2:W29/2, Stock No. S/N 24003-0027).

c. "Flow Measurement in Open Channels and Closed Conduits", U.S. Department of Commerce, National Bureau of Standards, NBS Special Publication 484, October 1977, 982 pp. (Available in paper copy or microfiche from National Technical Information Service (NTIS), Springfield, VA 22151. Order by NTIS No. PB-273 535/5ST).

d. "NPDES Compliance Sampling Manual", U.S. Environmental Protection Agency, Office of Water Enforcement, Publication MCD-51, 1977, 140 pp. MCD-51, 1977, 140 pp. (Available from the General Services Administration [8FFS], Centralized Mailing Lists Services, Building 41, Denver Federal Center, Denver, CO 80225).

3. *Monitoring Procedures*

Monitoring must be conducted according to test procedures approved under 40 CFR Part 136, unless other test procedures have been specified in this permit.

4. *Penalties for Tampering*

The Clean Water Act provides that any person who falsifies, tampers with, or knowingly renders inaccurate, any monitoring device or method required to be maintained under this permit shall, upon conviction, be punished by a fine of not more than $10,000 per violation, or by imprisonment for not more than 6 months per violation, or by both.

5. *Reporting of Monitoring Results*

The operator of each lease block shall be responsible for submitting monitoring results for each facility within each lease block.

If there is more than one facility (platform, drilling ship, semisubmersible), the discharge shall be designated in the following manner: 101 for the first facility; 201 for the second facility; 301 for the third facility; etc.

Monitoring results obtained during the previous 12 months shall be summarized and reported on a Discharge Monitoring Report (DMR) Form (EPA No. 3320-1). In addition, the highest monthly (lowest monthly for toxicity) average for each facility shall be reported. The highest daily maximum (daily minimum for toxicity) sample taken during the reporting period shall be reported as the daily maximum concentation.

If any category of waste (discharge) is not applicable due to the type of operation (e.g. drilling, production) no reporting is required for that particular outfall. Only DMR's representative of the activities occurring need to be submitted. A notification indicating the type of operation should be provided with the DMR's.

Upon receipt of a notification of intent to be covered, (Part II. E.1.) the Permittee will be notified of its specific permit number applicable to that lease block. Furthermore, the Permittee will be informed of the discharge monitoring report due date for that facility.

All notices and reports required under this permit shall be sent to the appropriate EPA Region as determined below:

a. For all lease blocks west of the western boundary of Outer Continental Shelf lease areas identified as: Mobile, Viosca Knoll (north part), Destin Dome, Desoto Canyon, Lloyd, and Henderson (contact either Region IV or VI for clarification):

Director Water Management Division (6W), Region VI, U.S. Environmental Protection Agency, P.O. Box 50708, Dallas, Texas 75250

b. For all lease blocks east of the line identified in a. above:

Director, Water Management Division (4W), Region IV, U.S. Environmental Protection Agency, 345 Courtland Street, NE., Atlanta, Georgia 30365

6. *Additional Monitoring by the Permittee*

If the permittee monitors any pollutant more frequently than required by this permit, using test procedures approved under 40 CFR Part 136 or as specified in this permit, the results of this monitoring shall be included in the calculation and reporting of the data submitted in the DMR. Such increased monitoring frequency shall also be indicated on the DMR.

7. *Averaging of Measurements*

Calculations for all limitations which require averaging of measurements shall utilize an arithmetic mean unless otherwise specified by the Regional Administrator in the permit.

8. *Retention of Records*

The permittee shall retain records of all monitoring information, including all calibration and maintenance records and all original strip chart recordings for continuous monitoring instrumentation, copies of all reports required by this permit, for a period of at least 3 years from the date of the sample, measurement, or report. This period may be extended by request of the Regional Administrator at any time.

The operator shall maintain records at development and production facilities for 3 years, wherever practicable and at a specific shore-based site whenever not practicable. The operator is responsible for maintaining records at exploratory facilities while they are discharging under the operator's control and at a specified shore-based site for the remainder of the 3-year retention period.

9. *Record Contents*

Records of monitoring information shall include:

a. The date, exact place, and time of sampling or measurements;

b. The individual(s) who performed the sampling or measurements;

c. The date(s) analyses were performed;

d. The individual(s) who performed the analyses;

e. The analytical techniques or methods used; and

f. The results of such analyses.

10. *Inspection and Entry*

The permittee shall allow the Regional Administrator or an authorized representative, upon the presentation of credentials and other documents as may be required by law, to:

a. Enter upon the permittee's premises where a regulated facility or activity is located or conducted, or where records must be kept under the conditions of this permit;

b. Have access to and copy, at reasonable times, any records that must be kept under the conditions of this permit;

c. Inspect at reasonable times any facilities, equipment (including monitoring and control equipment), practices, or operations regulated or required under this permit; and

d. Sample or monitor at reasonable times, for the purposes of assuring permit compliance or as otherwise authorized by the Clean Water Act, any substances or parameters at any location.

Section D. Reporting Requirements

1. *Planned Changes*

The permittee shall give notice to the Regional Administrator as soon as possible of any planned physical alterations or additions to the permitted facility. Notice is required only when:

a. The alteration or addition to a permitted facility may meet one of the criteria for determining whether a facility is a new source in 40 CFR Part 122.29(b) (48 FR 14153, April 1, 1983, as amended at 49 *FR* 38049, September 26, 1984); or

b. The alteration or addition could significantly change the nature or increase the quantity of pollutants discharged. This notification applies to pollutants which are subject neither to effluent limitations in the permit, nor to notification requirements under 40 CFR 122.42(a)(1) (48 FR 14153, April 1, 1983, as amended 49 *FR* 38049, September 26, 1984).

2. *Anticipated Noncompliance*

The permittee shall give advance notice to the Regional Administrator of any planned changes in the permitted facility or activity which may result in noncompliance with permit requirements.

3. *Transfer*

This permit is not transferable to any person except after notice to the Regional Administrator. The Regional Administrator may require modification or revocation and reissuance of the permit to change the name of the permittee and incorporate such other requirements as may be necessary under the Clean Water Act.

4. *Monitoring Reports*

Monitoring results shall be reported at the intervals and in the form specified in section C, paragraph 5 (Monitoring).

5. *Compliance Schedules*

Reports of compliance or noncompliance with, or any progress reports on, interim and final requirements contained in any compliance schedule of this permit shall be submitted no later than 14 days following each schedule date. Any reports of noncompliance shall include the cause of noncompliance, any remedial actions taken,

and the probability of meeting the next scheduled requirement.

6. *Twenty Four Hour Reporting*

The permittee shall report any noncompliance which may endanger health or the environment. Any information shall be provided orally within 24 hours from the time the permittee becomes aware of the circumstances. A written submission shall also be provided within 5 days of the time the permittee becomes aware of the circumstances. The written submission shall contain a description of the noncompliance and its cause; the period of noncompliance, including exact dates and times, and if the noncompliance has not been corrected, the anticipated time it is expected to continue; and steps taken or planned to reduce, eliminate, and prevent reoccurrence of the noncompliance. The Regional Administrator may waive the written report on a case-by-case basis if the oral report has been received within 24 hours.

The following shall be included as information which must be reported within 24 hours:

a. Any unanticipted bypass which exceeds any effluent limitation in the permit.

b. Any upset which exceeds any effluent limitation in the permit.

c. Violations of a maximum daily discharge limitation or daily minimum toxicity limitation for any of the pollutants listed by the Regional Administrator in Part III of the permit to be reported within 24 hours.

For locations indentified in Part II.C.5 reporting to Region VI, the reports should be made to telephone number (214) 767-2214. Locations reporting to Region IV should use telephone number (404) 347-4062. The Regional Administrator may waive the written report on a case-by-case basis if the oral report has been received within 24 hours.

7. *Other Noncompliance*

The permitted shall report all instances of noncompliance not reported under section D, paragraphs 4, 5, and 6, at the time monitoring reports are submitted. The reports shall contain the information listed in section D, paragraph 6.

8. *Changes in Discharges of Toxic Substances*

The permitted shall notify the Regional Administrator as soon as it knows or has reason to believe:

a. That any activity has occurred or will occur which would result in the discharge, in a routine or frequent basis, or any toxic pollutant which is not limited in the permit, if that discharge will exceed the highest of the "notification levels" described in 40 CFR 122.42(a)(1) and i & ii.

b. That any activity has occurred or will occur which would result in any discharge, on a non-routine or infrequent basis, of a toxic pollutant which is not limited in the permit, if that discharge will exceed the highest of the "notification levels" described in 40 CFR 122.42(a)(2) i & ii.

9. *Duty to Provide Information*

The permittee shall furnish to the Regional Administrator, within a reasonable time, any information which the Regional Administrator may request to determine whether cause exists for modifying, revoking and reissuing, or terminating this permit, or to determine compliance with this permit. The permittee shall also furnish to the Regional Administrator upon request, copies of records required to be kept by this permit.

10. *Signatory Requirements*

All applications, reports, or information submitted to the Regional Administrator shall be signed and certified.

a. All permit applications shall be signed as follows:

(1) For a corporation: by a responsible corporate officer. For the purpose of this section, a responsible corporate officer means:

(i) A president, secretary, treasurer, or vice-president of the corporation in charge of a principal business function, or any other person who performs similar policy or decision making functions for the corporation, or

(ii) The manager of one or more manufacturing, production, or operating facilities employing more than 250 persons or having gross annual sales or expenditures exceeding $25 million (in second-quarter 1980 dollars), if authority to sign documents has been assigned or delegated to the manager in accordance with corporate procedures.

(2) For a partnership or sole proprietorship: by a general partner or the proprietor, respectively.

(3) For a municipality, State, Federal, or other public agency: By either a principal executive officer or ranking elected official. For purposes of this section, a principal executive officer of a Federal agency includes:

(i) The chief executive officer of the agency; or

(ii) a senior executive officer having responsibility for the overall operations of a principal geographic unit of the agency.

b. All reports required by the permit and other information requested by the Regional Administrator shall be signed by a person described above or by a duly authorized representative of that person.

A person is a duly authorized representative only if:

(1) The authorization is made in writing by a person described above.

(2) The authorization specified either an individual or a position having responsibility for the overall operation of the regulated facility or activity, such as the position of plant manager, operator of a well or a well field, superintendent, or position of equivalent responsibility, or an individual or position having overall responsibility for environmental matters for the company. A duly authorized representative may thus be either a named individual or any individual occupying a named position; and,

(3) The written authorization is submitted to the Regional Administrator.

c. Certification. Any person signing a document under this section shall make the following certification:

"I certify under penalty of law that this document and all attachments were prepared under my direction or supervision in accordance with a system designed to assure that qualified personnel properly gather and evaluate the information submitted. Based on my inquiry of the person or persons who manage the system, or those persons directly responsible for gathering the information, the information submitted is, to the best of my knowledge and belief, true, accurate, and complete. I am aware that there are significant penalties for submitting false information, including the possibility of fine and imprisonment for knowing violations."

11. *Availability of Reports*

Except for data determined to be confidential under 40 CFR Part 2, all reports prepared in accordance with the terms of this permit shall be available for public inspection at the office of the Regional Administrator. As required by the Clean Water Act, the name and address of any permit applicant or permittee, permit applications, permits, and effluent data shall not be considered confidential.

12. *Penalties for Falsification of Reports*

The Clean Water Act provides that any person who knowingly makes any false statement, representation, or certification in any record or other document submitted or required to be maintained under this permit, including monitoring reports or reports of compliance or noncompliance shall, upon conviction, be punished by a fine of not more than $10,000 per violation, or by imprisonment for not more than 6 months per violation, or by both.

Section E. Notification Requirements

Permittees located in lease blocks that (a) are neither in nor adjacent to MMS-defined "no activity" areas, or (b) do not require live-bottom surveys are required only to submit a notice of intent to be covered by this general permit. Permittees who are located in lease blocks that are either in or adjacent to "no activity" areas or require live-bottom surveys are required to submit both a notice of intent to be covered that specifies they are located in such a lease block, and in addition, are required to submit a notice of commencement of operations.

For permittees located in lease blocks either in or immediately adjacent to MMS-defined "no activity" areas, who report to the Regional Administrator Region 6, the permittee shall be responsible for determining whether a controlled discharge rate is required. The maximum discharge rate for drilling fluids is determined by the distance from the facility to the "no activity" area boundary and the discharge rate equation provided in Appendix A, Figure 1. The permittee shall report their distance to the "no activity" area boundary and their calculated maximum discharge rate to EPA Region 6 with their notice of commencement of operations.

For permittees located in lease blocks that require live-bottom surveys, the final determination of the presence or absence of live-bottom communities, the distance of the facility from identified live-bottom areas, and the calculated maximum discharge rate shall be reported with the notice of commencement of operations.

1. *Intent to be Covered*

Written notification of intent to be covered, including the legal name and address of the operator, the lease block number assigned by the Department of Interior or, if none, the name commonly assigned to the lease area,

and the number and type of facilities located within the lease block, shall be submitted:

(a) Within 45 days of the effective date of this permit, by operators of lease blocks who were covered by BPT permits continued under the Administrative Procedure Act (general permit TX0085642 or any individual permits), or operators of leases in the geographic area of general permit TX0085642 obtained after June 30, 1984, or leases in the Eastern Gulf planning area obtained after January 1, 1984, but before the effective date of this permit.

(b) Fourteen days prior to the commencement of discharge by operators of leases obtained subsequent to the effective date of this permit.

2. *Commencement of Operators*

Written notification of any facility subject to the controlled discharge rate shall include:

(a) The distance of the facility from live-bottom or no activity areas; and,

(b) The calculated maximum discharge rate.

3. *Termination of Operations*

Lease block operators shall notify the Regional Administrator within 60 days after the permanent termination of discharges from their facilities within the lease block.

4. *Intent to be Covered by a Subsequent Permit*

Lease block operators authorized to discharge by this permit shall notify the appropriate Regional Administrator on or before December 29, 1990, that they intend to be covered (see E.1. above) by a new permit that will authorize discharges from these facilities after the termination date of this permit (June 29, 1991).

Section F. Additional General Permit Conditions

1. *When the Regional Administrator May Require Application for an Individual NPDES Permit*

The Regional Administrator may require any person authorized by this permit to apply for and obtain an individual NPDES permit when:

(a) The discharge(s) is a significant contributor of pollution;

(b) The discharger is not in compliance with the conditions of this permit;

(c) A change has occurred in the availability of the demonstrated technology or practices for the control or abatement of pollutants applicable to the point sources;

(d) Effluent limitation guidelines are promulgated for point sources covered by this permit;

(e) A Water Quality Management Plan containing requirements applicable to such point source is approved; or

(f) The point source(s) covered by this permit no longer:

(1) Involve the same or substantially similar types of operations;

(2) Discharge the same types of wastes;

(3) Require the same effluent limitations or operating conditions;

(4) Require the same or similar monitoring; and

(5) In the opinion of the Regional Administrator, are more appropriately controlled under an individual permit than under a general permit.

The Regional Administrator may require any operator authorized by this permit to apply for an individual NPDES permit only if the operator has been notified in writing that a permit application is required.

2. *When an Individual NPDES Permit may be Requested*

(a) Any operator authorized by this permit may request to be excluded from the coverage of this general permit by applying for an individual permit. The operator shall submit an application together with the reasons supporting the request to the Regional Administrator no later than October 7, 1986.

(b) When an individual NPDES permit is issued to an operator otherwise subject to this general permit, the applicability of this permit to the owner or operator is automatically terminated on the effective date of the individual permit.

(c) A source excluded from coverage under this general permit solely because it already has an individual permit may request that its individual permit be revoked, and that it be covered by this general permit. Upon revocation of the individual permit, this general permit shall apply to the source.

Part III

Section A. General Permit Area

The area covered by this general permit includes the Gulf of Mexico located in lease areas seaward of the outer boundary of the territorial seas.

Section B. Other Conditions

1. *Samples of Wastes*

If requested, the permittee shall provide EPA with a sample of any waste in a manner specified by the Agency.

2. *Toxicity Test*

The approved test method for permit compliance is identified as:

U.S. Environmental Protection Agency Industrial Technology Division. May 1985. Appendix 3—Drilling Fluids Toxicity Test Proposed Regulation for the Offshore Subcategory of the Oil and Gas Extraction Point Source Category, 50 FR 34592, at 34631.

3. *Retort Test*

The approved test method for permit reporting is identified as:

American Petroleum Institute, 1985. Standard procedure for field testing drilling fluids. API Recommended Practice Bulletin 13B. 11th Edition, May 1985 API, Dallas, TX. pp 13–15.

Section C. Alternative Toxicity Request Procedure

1. *Procedure:*

(a) If an operator, after selection of mud systems and additives to be used in a well drilling program, determines that a mud may be more toxic than the 30,000 ppm LC50 toxicity limitation, the operator may request an alternative toxicity limit for the mud, by submitting the following information to the appropriate Region (IV or VI) at least 60 days prior to discharging whenever feasible:

(1) Toxicity test results of laboratory-formulated hot-rolled mud containing the greatest concentrations of mud additives sought for approval;

(2) Location of the well(s) to be drilled using this mud system, including lease block number, facility name, and well number;

(3) Approximate start-up date and duration of drilling program;

(4) Proximity of any areas of biological concern to well(s) to be drilled; [1]

(5) Chemical characterization of additive(s), amount required, requested use rate or concentration, total volume;

(6) Cost of mud system and any other additives considered practicable for use;

(7) Projected cost of barging and disposal if discharge were not allowed;

(8) A calculation of the drilling fluid discharge rate based on the distance of the facility from the area of biological concern and the requested alternative toxicity limit;

(9) Demonstration that use of a mud system which would meet the 30,000 ppm LC50 toxicity limitation is not feasible and that the proposed mud system is the least toxic available;

(b) A more restrictive (less toxic) toxicity limitation may be requested in order to establish a greater drilling fluids discharge rate. The information in (a) (1)–(9) above should be provded 60 days prior to discharging, whenever feasible.

(c) The appropriate Region will analyze the information received, request any further information necessary, and establish an alternative toxicity limit where justified.

(d) All operators will be required to comply with the 30,000 ppm LC50 toxicity limitation in the permit (unless part of DPMP Part I.A.1.(d)) unless an alternative toxicity limitation is established through the above procedure in which case the operator must comply with the alternative toxicity limitation.

Section D. Definitions

"Annual Average" means the average of all discharges sampled and/or measured during a calendar year in which daily discharges are sampled and/or measured, divided by the number of discharges sampled and/or measured during such year.

"Areas of Biological Concern" means locations identified by MMS as "no activity zones" or areas determined by MMS, EPA, and the the affected States collectively, that contain significant live bottom characteristics.

"Blow-Out Preventer Control Fluid" means fluid used to actuate the hydraulic equipment on the blow-out preventer.

"Boiler Blowdown" means discharge from boilers necessary to minimize solids build-up in the boilers.

"Completion Fluids" means any fluid used in a newly drilled well to allow safe preparation of the well for production.

"Controlled Discharge Rate Areas" means zones adjacent to areas of biological concern or the territorial seas of the State of Mississippi.

[1] Operators in lease block areas in proximity to areas of biological concern, or adjacent to the territorial seas of Mississippi, may be reqired to restrict their rate of discharge of drill muds, due to the increased toxicity of the discharged mud, if an alternative toxicity limit is granted.

"Deck Drainage" means all waste resulting from platform washings, deck washings, and run-off from curbs, gutters, and drains including drip pans and wash areas.

"Desalinization Unit Discharge" means wastewater associated with the process of creating fresh water from seawater.

"Diesel Oil" means the distillate fuel oil, typically used in conventional oil-based drilling fluids, which contains a number of toxic pollutants. For the purpose of any particular operation under this permit, diesel oil shall refer to the fuel oil present on the facility.

"Domestic Waste" means discharges from galleys, sinks, showers, and launderies only.

"Drill Cuttings" means particles generated by drilling into the subsurface geological formations.

"Drilling Fluids" means any fluid sent down the hole, including drilling muds and any specialty products, from the time a well is begun until final cessation of drilling in that hole.

"End-of-Well" means the point when total well depth is reached.

"Inverse Emulsion Drilling Fluids" means an oil-base drilling fluid which also contains a large amount of water.

"Live bottom areas" means those areas which contain biological assemblages consisting of such sessile invertebrates as sea fans, sea whips, hydroids, anemones, ascideians sponges, bryozoans, seagrasses, or corals living upon and attached to naturally occurring hard or rocky formations with fishes and other fauna.

"Maximum Hourly Rate" means the greatest number of barrels of drilling fluids discharged within one hour, expressed as barrels per hour.

"Muds, Cuttings, and Cement at the Seafloor" means discharges which occurr at the seafloor prior to installation of the marine riser.

"No Activity Zones" means those areas identified by the Minerals Management Service where no structures, drilling rigs, or pipelines will be allowed. Those zones are identified as lease stipulations in: U.S. Department of Interior. Minerals Management Service, January, 1983. Final regional environmental impact statement, Gulf of Mexico. Additional no activity areas may be identified by MMS during the life of this permit.

"Priority Pollutants" means those chemicals or elements identified by EPA, pursuant to section 307 of the Clean Water Act, and 40 CFR 401.15.

"Produced Sands" means sands and other solids removed from the produced waters.

"Produced Waters" means waters and particulate matter associated with oil and gas producing formations. Sometimes the terms "formation water" or "brine water" are used to describe produced water.

"Santiary Waste" means human body waste discharged from toilets and urinals.

"Source Water and Sand" mean water from non-hydrocarbon bearing formations for the purpose of pressure maintenance or secondary recovery including the entrained solids.

"Spotting" means the process of adding a lubricant (spot) downhole to free stuck pipe.

"Territorial Seas" means the belt of the seas measured from the line of ordinary low water along that portion of the coast which is in direct contact with the open sea and the line marking the seaward limit of inland waters, and extending seaward a distance of three miles.

"Uncontaminated Ballast/Bilge Water" means seawater added or removed to maintain proper draft.

"Uncontaminated Seawater" means seawater which is returned to the sea without the addition of chemicals. Included are: (1) Discharges of excess seawater which permit the continuous operation of fire control and utility lift pumps, (2) excess seawater from pressure maintenance and secondary recovery projects, (3) water released during the training and testing of personnel in fire protection, (4) seawater used to pressure test piping, and (5) once through, noncontact cooling water.

"Well treatment fluids" means any fluid used to enhance production by physically altering oil bearing strata after a well has been drilled.

"Workover fluids" means any fluid used in a producing well to allow safe repair and maintenance procedures.

Appendix A—Figure 1: Drilling Fluids Discharge Rate Graph

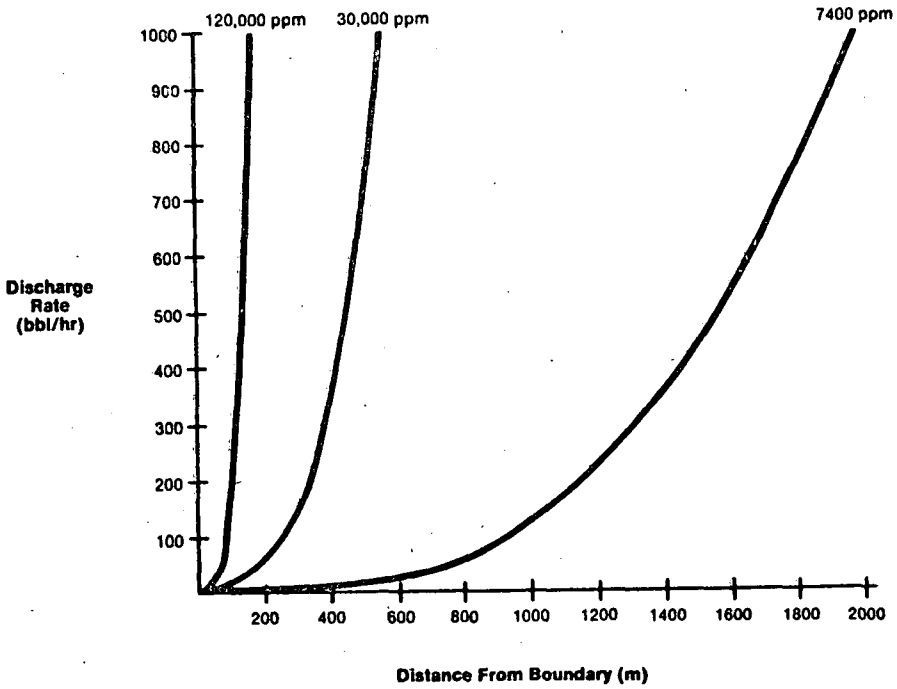

[FR Doc. 86-15176 Filed 7-8-86; 8:45 am]

BILLING CODE 6560-50-M

EQUAL EMPLOYMENT OPPORTUNITY COMMISSION

Agency Report Forms Under OMB Review

AGENCY: Equal Employment Opportunity Commission.

ACTION: Request for comments.

SUMMARY: Under the provisions of the Paperwork Reduction Act (44 U.S.C. Chapter 35), agencies are required to submit proposed information collection requests to OMB for review and approval, and to publish a notice in the **Federal Register** notifying the public that the agency has made such a submission. The proposed report form under review is listed below.

DATE: Comments must be received on or before August 25, 1986. If you anticipate commenting on a report form, but find that time to prepare will prevent you from submitting comments promptly, you should advise the OMB Reviewer and the Agency Liaison Officer of your intent as early as possible.

ADDRESS: Copies of the proposed report form, the request for clearance, (S.F. 83), supporting statement, and other documents submitted to OMB for review may be obtained from the Agency Liaison Officer and the OMB Reviewer.

FOR FURTHER INFORMATION CONTACT: EEOC Agency Liaison Officer: Margaret P. Ulmer, Financial and Resource Management Services, Room 386, 2401 E. Street NW., Washington, DC, 20507; Telephone (202) 634-1932.

OMB Reviewer: James Mason, Office of Information and Regulatory Affairs, Office of Management and Budget, Room 3208, New Executive Office Building, Washington, DC, 20503; Telephone (202) 395-6880.

Type of Request: Extension (No change)
Title: Employer Information Report EEO-1
Form Number: Standard Form 100
Frequency of Report: Annually
Type of Respondent: Private employers with 100 or more employees and certain Federal government

contractors with 50 or more employees
Standard Industrial Classification (SIC) Code: Multiple
Description of Affected Public: IND/HHID and Farms and Business/INST
Responses: 126,700
Reporting Hours: 558,500
Federal Cost: $489,000
Applicable under Section 3504(h) of Public Law 96-511: Not applicable
Number of Forms:

Abstract-Needs/Users: EEO-1 data are used by EEOC to investigate charges of discrimination against employers in private industry. Data are shared with several Federal government agencies, particularly the Office of Federal Contract Compliance Programs (OFCCP), U.S. Department of Labor. Under Section 709(d) of Title VII of the Civil Rights Act of 1964, as amended, EEO-1 data are also shared with approximately 127 State and local FEPC agencies.

For the Commission.

John Seal,

Management Director, Equal Employment Opportunity Commission.

[FR Doc. 86-15406 Filed 7-8-86; 8:45 am]

BILLING CODE 6570-06-M

FEDERAL COMMUNICATIONS COMMISSION

Public Information Collection Requirements Submitted to Office of Management and Budget for Review

June 27, 1986.

The Federal Communications Commission has submitted the following information collection requirements to OMB for review and clearance under the Paperwork Reduction Act of 1980, Pub. L. 96-511.

Copies of the submissions are available from Jerry Cowden, Federal Communications Commission, (202) 632-7513. Persons wishing to comment on these information collections should contact David Reed, Office of Management and Budget, Room 3235 NEOB, Washington, DC 20503, (202) 395-7231.

OMB Number: None.
Title: Section 63.701, Request for Designation as a Recognized Private Operating Agency.
Action: New collection.
Respondents: Enhanced-service providers who offer an international public correspondence service.
Estimated Annual Burden: 30 Responses; 150 Hours.
OMB Number: None,
Title: Cost Allocation Data for Existing Central Office Equipment Plant Categories (CC Docket No. 80-286, Order Inviting Comments and Request for Data).
Action: New Collection.
Respondents: Telephone companies.
Estimated Annual Burden: 1,200 Responses; 60,000 Hours.

Federal Communications Commission.

William J. Tricarico,

Secretary.

[FR Doc. 86-15384 Filed 7-8-86; 8:45 am]

BILLING CODE 6712-01-M

Public Information Collection Requirements Submitted to Office of Management and Budget for Review

July 1, 1986.

The following information collection requirements have been approved by the Office of Management and Budget under the Paperwork Reduction Act of 1980 (44 U.S.C. 3507). For further information contact Doris Benz (202) 632-7513.

OMB No.: 3060-0010.
Title: Ownership Report.
Form No.: FCC 323.
A revised report form FCC 323 has been approved for use through 6/30/89. The June 1983 edition will remain in use until revised forms are available. (The 4/30/86 expiration date printed on the form was previously extended to 9/30/87.)

OMB No.: 3060-0022.
Title: Application of Alien Amateur Radio Licensee for Permit to Operate in the United States.
Form No.: FCC 610-A.
A revised application form FCC 610-A has been approved for use through 6/30/89. The July 1984 edition with an expiration date of 5/31/87 will remain in use until revised forms are available.

OMB No.: 3060-0102.
Title: Priority Request and Certification.
Form No.: FCC 915.
The approval on FCC 915 has been extended through 6/30/89. The current edition will remain in use until updated forms are available.

Federal Communications Commission.

William J. Tricarico,

Secretary.

[FR Doc. 86-15385 Filed 7-8-86; 8:45 am]

BILLING CODE 6712-01-M

Applications for Consolidated Hearing; Franklin Broadcasting et al.

1. The Commission has before it the following mutually exclusive applications for a new FM station:

Applicant, City and State	File No.	MM docket No.
A. Charles E. Franklin d/b/a Franklin Broadcasting, Manteo, NC.	BPH-850304MA	86-228
B. Manteo Community Broadcasting, Inc, Manteo, NC.	BPH-850530MF	
C. Lorin A. Costanzo and Peter G. Costanzo d/b/a Costanzo Broadcasters, Manteo, NC.	BPH-850531MR	
D. Melford Blackwell, Manteo, NC.	BPH-850531NA	

2. Pursuant to section 309(e) of the Communications Act of 1934, as amended, the above applications have been designated for hearing in a consolidated proceeding upon the issues whose headings are set forth below. The text of each of these issues has been standardized and is set forth in its entirety under the corresponding headings at 51 FR 19347, May 29, 1986. The letter shown before each applicant's name, above, is used below to signify whether the issue in question applies to that particular applicant.

Issue heading	Applicant(s)
1. Air Hazard	A
2. Comparative	A, B, C, D
3. Ultimate	A, B, C, D

3. If there is any non-standardized issue(s) in this proceeding, the full text of the issue and the applicant(s) to which it applies are set forth in an Appendix to this Notice. A copy of the complete HDO in this proceeding is available for inspection and copying during normal business hours in the FCC Dockets Branch (Room 230), 1919 M Street, NW., Washington, D.C. The complete text may also be purchased from the Commission's duplicating contractor, International Transcription Services, Inc., 2100 M Street, NW., Washington, DC 20037. (Telephone (202) 857-3800).

W. Jan Gay,

Assistant Chief, Audio Services Division, Mass Media Bureau.

[FR Doc. 86-15387 Filed 7-8-86; 8:45 am]

BILLING CODE 6712-01-M

Applications for Consolidated Hearing; Freedom Community Broadcasting, Inc., et al.

1. The Commission has before it the following exclusive appplications for a new FM station:

Applicant, City and State	File No.	MM Docket No.
A. Freedom Community Broadcasting, Inc. Freedom, CA.	BPH-831216BO	86-227
B. Virginia Jo McFadden; Freedom, CA.	BPH-840112AG	
C Freedom FM Wireless Company; Freedom, CA.	BPH-840423IP	

Applicant, City and State	File No.	MM Docket No.
D. Linda S. Adams, d.b.a El P Oso de Trapo Broadcasting Co.; Freedom, CA.	BPH-840427IC	
E. Damnae Albon Limited Partnership; Freedom, CA.	BPH-840430IH	
F. Santa Cruz Broadcasting, Company, Inc.; Freedom, CA.	BPH-840430II	
G. Laura Hopper; Freedom, CA.	BPH-840430IR	
H. Freedom Broadcasting Corporation; Freedom, CA.	DBPH-840430IK (Dismissed).	

2. Pursuant to section 309(e) of the Communications Act of 1934, as amended, the above applications have been designated for hearing in a consolidated proceeding upon the issues whose headings are set forth below. The text of each of these issues has been standardized and is set forth in its entirety under the corresponding headings at 51 FR 19347, May 29, 1986. The letter shown before each applicant's name, above, is used below to signify whether the issue in question applies to that particular applicant.

Issue heading and Applicant(s)

1. Environmental Impact, B, C, D, E, F, G.
2. City Coverage—FM, D.
3. Air Hazard, B, C, D, F.
4. Comparative All applicants.
5. Ultimate, All applicants.

3. If there is any non-standardized issue(s) in this proceeding, the full text of the issue and the applicant(s) to which it applies are set forth in an Appendix to this Notice. A copy of the complete HDO in this proceeding is available for inspection and copying during normal business hours in the FCC Docket Branch (Room 230), 1919 M Street, NW., Washington, D.C. The complete text may also be purchased from the Commission's duplicating contractor, International Transcription Services, Inc., 2100 M Street, NW., Washington, DC 20037. (Telephone (202) 857-3800).

W. Jan Gay,

Assistant Chief Audio Services Division, Mass Media Bureau.

[FR Doc. 86-15388 Filed 7-8-86; 8:45 am]

BILLING CODE 6712-01-M

Applications for Consolidated Hearing; Alan and Adabeth Routt et al.

1. The Commission has before it the following mutually exclusive applications for a new FM station:

Applicant, City and State	File No.	MM Docket No.
A. Alan and Adabeth Routt, Pittsburg, TX.	BPH-841108IE	86-226
B. Pittsburg Broadcasting Company, Pittsburg, TX.	BPH-850211MA	

2. Pursuant to section 309(e) of the Communications Act of 1934, as amended, the above applications have been designated for hearing in a consolidated proceeding upon the issues whose headings are set forth below. The text of each of these issues has been standardized and is set forth in its entirety under the corresponding headings at 51 FR 19347, May 29, 1986. The letter shown before each applicant's name, above, is used below to signify whether the issue in question applies to that particular applicant.

Issue heading	Applicant(s)
1. Environmental Impact	A
2. Air Hazard	B
3. Comparative	A, B
4. Ultimate	A, B

3. If there is any non-standardized issue(s) in this proceeding, the full text of the issue and the applicant(s) to which it applies are set forth in an Appendix to this Notice. A copy of the complete HDO in this proceeding is available for inspection and copying during normal business hours in the FCC Dockets Branch (Room 230), 1919 M Street, NW., Washington, D.C. The complete text may also be purchased from the Commission's duplicating contractor, International Transcription Services, Inc., 2100 M Street, NW., Washington, DC 20037. (Telephone (202) 857-3800).

W. Jan. Gay,

Assistant Chief, Audio Services Division, Mass Media Bureau.

[FR Doc. 86-15389 Filed 7-8-86; 8:45 am]

BILLING CODE 6712-01-M

[Report No. 1603]

Petitions for Reconsideration and Clarification of Actions in Rulemaking Proceeding

July 1, 1986.

Petitions for reconsideration and clarification have been filed in the Commission rule making proceeding listed in this Public Notice and published pursuant to 47 CFR 1.429(e). The full text of these documents are available for viewing and copying in Room 239, 1919 M Street, NW., Washington, DC, or may be purchased from the Commission's copy contractor, International Transcription Service (202-057-3800). Oppositions to these petitions must be filed within 15 days after publication of this Public Notice in the **Federal Register**. Replies to an opposition must be filed within 10 days after the time for filing oppositions has expired.

Subject: Procedures for Implementing The Detariffing of Customer Premises Equipment and Enhanced Services. (Second Computer Inquiry) (CC Docket No. 81-893).

American Telephone and Telegraph Company, Request for Approval To Supplement the Capitalization of AT&T Information Systems in Connection with the Transfers of Embedded Customer Premises Equipment. (File No. ENF83-18). Number of petitions received: 1.

Subject: International Communications Policies Governing Designation of Recognized Private Operating Agencies, Grants of IRUs in International Facilities and Assignment of Data Network Identification Codes. (CC Docket No. 83-1230). Number of petitions received: 5.

Subject: Amendment of Part 97 of the Commission's Rules Concerning Frequency Coordination of Repeaters in the Amateur Radio Service. (PR Docket No. 85-22). Number of petitions received: 1.

Subjects; Amendment of § 73.202(b) Table of Allotments, FM Broadcast Stations. (Columbia, Missouri). Number of petitions received: 2.

William J. Tricarico,

Secretary, Federal Communications Commission.

[FR Doc. 86-15386 Filed 7-8-86; 8:45 am]

BILLING CODE 6712-01-M

FEDERAL MARITIME COMMISSION

Item Submitted for OMB Review

The Federal Maritime Commission hereby gives notice that the following item has been submitted for review pursuant to the Paperwork Reduction Act of 1980 (46 U.S.C. 3501, et. seq.). Requests for information, including copies of the collection of information and supporting documentation, may be obtained from John Robert Ewers, Director of Administration, Federal Maritime Commission, 1100 L Street, NW., Room 12211, Washington, DC 20573, telephone number (202) 523-5866. Comments may be submitted to the Office of Information and Regulatory Affairs, Office of Management and Budget, Attention: Desk Officer for the Federal Maritime Commission, within 15 days after the date of the **Federal Register** in which this notice appears.

Summary of Item Submitted for OMB Review

46 CFR 502—Rules of Practice and Procedure Form FMC-12

FMC requests extension of clearance for Form FMC-12 which is used by those persons not attorneys at law to apply for admission to practice before the

Commission (46 CFR 502.27). Total estimated annual burden for 30 respondents is 30 manhours per year. Total estimated annual cost to the Federal Government is approximately $500; total estimated annual cost to respondents is approximately $1300.

Joseph C. Polking,

Secretary.

[FR Doc. 86-15398 Filed 7-8-86; 8:45 am]

BILLING CODE 6730-01-M

Item Submitted for OMB Review

The Federal Maritime Commission hereby gives notice that the following item has been submitted for review pursuant to the Paperwork Reduction Act of 1980 (46 U.S.C. 3501, et. seq.). Requests for information, including copies of the collection of information and supporting documentation, may be obtained from John Robert Ewers, Director of Administration, Federal Maritime Commission, 1100 L St., NW., Room 12211, Washington, DC 20573, telephone number (202) 523-5866. Comments may be submitted to the Office of Information and Regulatory Affairs, Office of Management and Budget, Washington, DC 20573, Attention: Desk Officer for the Federal Maritime Commission, within 15 days after the date of the **Federal Register** in which this notice appears.

Summary of Item Submitted for OMB Review

46 CFR 515—Filing of Tariffs by Terminal Operators (Formerly 46 CFR 533)

FMC requests an extension of clearance for 46 CFR 515 which requires marine terminal operators performing services in connection with common carriers by water in the foreign and domestic offshore commerce of the United States to file with the Commission a schedule or tariff in duplicate showing all its rates, charges, rules and regulations relating to or connected with the receiving, handling, storing and/or delivering of property at its terminal facility. Such persons must also keep the tariffs open for public inspection as well as file two copies of tariff changes. Total estimated annual burden for 415 respondents is 6,255 manhours per year. Total estimated annual cost to the Federal Government is approximately $47,000; total estimated annual cost to respondents is approximately $59,000.

Joseph C. Polking,

Secretary.

[FR Doc. 86-15399 Filed 7-8-86; 8:45 am]

BILLING CODE 6730-01-M

FEDERAL RESERVE SYSTEM

Baii Holdings, S.A., et al.; Applications To Engage de Novo in Permissible Nonbanking Activities

The companies listed in this notice have filed an application under § 225.23(a)(1) of the Board's Regulation Y (12 CFR 225.23(a)(1)) for the Board's approval under section 4(c)(8) of the Bank Holding Company Act (12 U.S.C. 1843(c)(8)) and § 225.21(a) of Regulation Y (12 CFR 225.21(a)) to commerce or to engage *de novo*, either directly or through a subsidiary, in a nonbanking activity that is listed in § 225.25 of Regulation Y as closely related to banking and permissible for bank holding companies. Unless otherwise noted, such activities will be conducted throughout the United States.

Each application is available for immediate inspection at the Federal Reserve Bank indicated. Once the application has been accepted for processing, it will also be available for inspection at the offices of the Board of Governors. Interested persons may express their views in writing on the question whether consummation of the proposal can "reasonably be expected to produce benefits to the public, such as greater convenience, increased competition, or gains in efficiency, that outweigh possible adverse effects, such as undue concentration of resources, decreased or unfair competition, conflicts of interests, or unsound banking practices." Any request for a hearing on this question must be accompanied by a statement of the reasons a written presentation would not suffice in lieu of a hearing, identifying specifically any questions of fact that are in dispute, summarizing the evidence that would be presented at a hearing, and indicating how the party commenting would be aggrieved by approval of the proposal.

Unless otherwise noted, comments regarding the applications must be received at the Reserve Bank indicated or the offices of the Board of Governors not later than July 28, 1986.

A. **Federal Reserve Bank of New York** (William L. Rutledge, Vice President) 33 Liberty Street, New York, New York 10045:

1. *Baii Holdings, S.A.*, Luxembourg, Luxembourg; to engage *de novo* through its subsidiary, Sheppards & Chase (Overseas), Inc., New York, in providing securities brokerage services and permitted incidental activities; such securities brokerage services will be restricted to buying and selling securities solely as agent for the account of customers and will not include securities underwriting or dealing or investment advice or research services pursuant to § 225.25(b)(15) of the Board's Regulation Y. Comments on this application must be received not later than July 25, 1986.

B. **Federal Reserve Bank of Richmond** (Lloyd W. Bostian, Jr., Vice President) 701 East Byrd Street, Richmond, Virginia 23261:

1. *Maryland National Corportation*, Baltimore, Maryland; to engage *de novo* through its subsidiary, Maryland National Mortgage Corporation, Wilmington, Delaware, in conducting business generally such as would be conducted by a mortgage banker, mortgage broker and mortgage servicing firm; originating, buying, selling and otherwise dealing in mortgage loans as principal or agents; servicing mortgage loans for affiliated or nonaffiliated entities; acting as advisor in mortgage loans transactions; and selling as agent credit life, credit disability and credit accident and health insurance in connection with extensions of credit by bank and nonbank subsidiaries of the holding company pursuant to § 225.25(b)(1) and (8) of the Board's Regulation Y.

C. **Federal Reserve Bank of Minneapolis** (Bruce J. Hedblom, Vice President) 250 Marquette Avenue, Minneapolis, Minnesota 55480:

1. *First Sleepy Eye Bancorporation, Inc.*, Sleepy Eye, Minnesota; to engage directly in providing data proceesing and data transmission services for the processing of financial and bank data pursuant to § 225.25(b)(7) of the Board's Regulation Y.

Board of Governors of the Federal Reserve System, July 2, 1986.

William W. Wiles,

Secretary of the Board.

[FR Doc. 86-15362 Filed 7-8-86; 8:45 am]

BILLING CODE 6210-01-M

Banc One Corporation et al.; Formations of; Acquisitions by; and Mergers of Bank Holding Companies

The companies listed in this notice have applied for the Board's approval under section 3 of the Bank Holding Company Act (12 U.S.C. 1842) and § 225.14 of the Board's Regulation Y (12 CFR 225.14) to become a bank holding company or to acquire a bank or bank holding company. The factors that are considered in action on the applications are set forth in section 3(c) of the Act (12 U.S.C. 1842(c)).

Each application is available for immediate inspection at the Federal Reserve Bank indicated. Once the application has been accepted for

processing, it will also be available for inspection at the offices of the Board of Governors. Interested persons may express their views in writing to the Reserve Bank or to the offices of the Board of Governors. Any comment on an application that requests a hearing must include a statement of why a written presentation would not suffice in lieu of a hearing, identifying specifically any questions of fact that are in dispute and summarizing the evidence that would be presented at a hearing.

Unless otherwise noted, comments regarding each of these applications must be received not later than July 30, 1986.

A. **Federal Reserve Bank of Cleveland** (Lee S. Adams, Vice President) 1455 East Sixth Street, Cleveland, Ohio 44101:

1. *Bank One Corporation*, Columbus, Ohio; to merge with Spartan Bankcorp, Inc., East Lansing, Michigan, and thereby indirectly acquire East Lansing State Bank, East Lansing, Michigan. Comments on this application must be received not later than July 31, 1986.

B. **Federal Reserve Bank of Chicago** (Franklin D. Dreyer, Vice President) 230 South LaSalle Street, Chicago, Illinois 60690:

1. *Charter National Bancorp, Inc.*, Taylor, Michigan; to become a bank holding company by acquiring 100 percent of the voting shares of National Bank Wyandotte Taylor, Taylor, Michigan.

2. *G S B Corporation*, George, Iowa; to become a bank holding company by acquiring 100 percent of the voting shares of George State Bank, George, Iowa.

Board of Governors of the Federal Reserve System, July 2, 1986.

William W. Wiles,

Secretary of the Board.

[FR Doc. 86-15363 Filed 7-8-86; 8:45 am]

BILLING CODE 6210-01-M

TB&C Bancshares, Inc.; Formation of, Acquisition by, or Merger of Bank Holding Companies; and Acquisition of Nonbanking Company

The company listed in this notice has applied under § 225.14 of the Board's Regulation Y (12 CFR 225.14) for the Board's approval under section 3 of the Bank Holding Company Act (12 U.S.C. 1842) to become a bank holding company or to acquire voting securities of a bank or bank holding company. The listed company has also applied under § 225.23(a)(2) of Regulation Y (12 CFR 225.23(a)(2)) for the Board's approval under section 4(c)(8) of the Bank Holding Company Act (12 U.S.C. 1843(c)(8)) and § 225.21(a) of Regulation Y (12 CFR 225.21(a)) to acquire or control voting securities or assets of a company engaged in a nonbanking activity that is listed in § 225.25 of Regulation Y as closely related to banking and permissible for bank holding companies, or to engage in such an activity. Unless otherwise noted, these activities will be conducted throughout the United States.

The application is available for immediate inspection at the Federal Reserve Bank indicated. Once the application has been accepted for processing, it will also be available for inspection at the offices of the Board of Governors. Interested persons may express their views in writing on the question whether consummation of the proposal can "reasonably be expected to produce benefits to the public, such as greater convenience, increased competition, or gains in efficiency, that outweigh possible adverse effects, such as undue concentration of resources, decreased or unfair competition, conflicts of interests, or unsound banking practices." Any request for a hearing on this question must be accompanied by a statement of the reasons a written presentation would not suffice in lieu of a hearing, identifying specifically any questions of fact that are in dispute, summarizing the evidence that would be presented at a hearing, and indicating how the party commenting would be aggrieved by approval of the proposal.

Comments regarding the application must be received at the Reserve Bank indicated or the offices of the Board of Governors not later than July 31, 1986.

A. **Federal Reserve Bank of Atlanta** (Robert E. Heck, Vice President) 104 Marietta Street, N.W., Atlanta, Georgia 30303:

1. *TB&C Bancshares, Inc.*, Columbus, Georgia; to become a bank holding company by acquiring 25 percent of the voting shares of CB&T Bancshares, Inc., Columbus, Georgia, and thereby indirectly acquire Columbus Bank and Trust Company, Columbus, Georgia; Security Bank and Trust Company, Albany, Georgia; Sumpter Bank and Trust Company, Americus, Georgia; Coastal Bank of Georgia, Brunswick, Georgia; Citizens Bank and Trust Company of West Georgia, Carrollton, Georgia; Cohutta Banking Company, Chatsworth, Georgia; Bank of Hazlehurst, Hazlehurst, Georgia; Commercial Bank and Trust Company of Troup County, LaGrange, Georgia; Moultrie National Bank, Moultrie, Georgia; Commercial Bank, Thomasville, Georgia; First State Bank and Trust Company, Valdosta, Georgia; and West Georgia Bank, Tallapoosa, Georgia.

Applicant has also applied to acquire Calumet Discount Brokerage Services, Inc., and thereby engage in securities brokerage services pursuant to § 225.25(b)(15) of the Board's Regulation Y; Calumet Financial Associates, Inc., adn thereby engage in investment and management services pursuant to § 225.25(b)(15) of the Board's Regulation Y; CB&T Homeowners, Inc., and thereby engage in second mortgage loans pursuant to § 225.25(b)(1) of the Board's Regulation Y; and The Georgia Company of America, and thereby engage in the origination and servicing of VA, FHA, and conventional first mortgatge loans pursuant to § 225.25(b)(1) of the Board's Regulation Y.

Board of Governors of the Federal Reserve System, July 2, 1986.

William W. Wiles,

Secretary of the Board.

[FR Doc. 86-15364 Filed 7-8-86; 8:45 am]

BILLING CODE 6210-01-M

Banco de Vizcaya; Correction

This notice corrects a previous **Federal Register** document (FR Doc. No. 86-14595, published at page 23473 of the issue for Friday, June 27, 1986.

A. **Federal Reserve Bank of Kansas City** (Thomas M. Hoenig, Vice President) 925 Grand Avenue, Kansas City, Missouri 64198:

1. *Banco De Vizcaya*, Bilbao, Spain, and New Mexico Banquest Investors Corporation, Santa Fe, New Mexico; to engage *de novo* through their subsidiary, New Mexico Banquest Corporation, Santa Fe, New Mexico, in providing to others data processing and transmission services and facilities pursuant to § 225.25(b)(7) of the Board's Regulation Y.

Comments on this application must be received not later than July 17, 1986.

Board of Governors of the Federal Reserve System, July 3, 1986.

William W. Wiles,

Secretary of the Board.

[FR Doc. 86-15480 Filed 7-8-86; 8:45 am]

BILLING CODE 6210-01-M

"96" Ranches, Inc.; Acquisition of Company Engaged in Permissible Nonbanking Activities

The organization listed in this notice has applied under § 225.23(a)(2) or (f) of the Board's Regulation Y (12 CFR 225.23(a)(2) or (f)) for the Board's approval under section 4(c)(8) of the

Bank Holding Company Act (12 U.S.C. 1843(c)(8)) and § 225.21(a) of Regulation Y (12 CFR 225.21(a)) to acquire or control voting securities or assets of a company engaged in a nonbanking activity that is listed in § 225.25 of Regulation Y as closely related to banking and permissible for bank holding companies. Unless otherwise noted, such activities will be conducted throughout the United States.

The application is available for immediate inspection at the Federal Reserve Bank indicated. Once the application has been accepted for processing, it will also be available for inspection at the offices of the Board of Governors. Interested persons may express their views in writing on the question whether consummation of the proposal can "reasonably be expected to produce benefits to the public, such as greater convenience, increased competition, or gains in efficiency, that outweight possible adverse effects, such as undue concentration of resources, decreased or unfair competition, conflicts of interests, or unsound banking practices." Any request for a hearing on this question must be accompanied by a statement of the reasons a written presentation would not suffice in lieu of a hearing, identifying specifically any questions of fact that are in dispute, summarizing the evidence that would be presented at a hearing, and indicating how the party commenting would be aggrieved by approval of the proposal.

Comments regarding the application must be received at the Reserve Bank indicated or the office of the Board of Governors not later than July 30, 1986.

A. **Federal Reserve Bank of Kansas City** (Thomas M. Hoenig, Vice President) 925 Grand Avenue, Kansas City, Missouri 64198:

1. *"96" Ranches, Inc.*, Gothenburg, Nebraska; to acquire Gothenburg Insurance Agency, Inc., Gothenburg, Nebraska, and thereby engage in general insurance activities in a community with a population not exceeding 5,000, pursuant to section 4(c)(8)(c) of the Act.

Board of Governors of the Federal Reserve System, July 3, 1986.

William W. Wiles,

Secretary of the Board.

[FR Doc. 86-15481 Filed 7-8-86; 8:45 am]

BILLING CODE 6210-01-M

Premier Bankshares Corp.; Formation of, Acquisition by, or Merger of Bank Holding Companies

The company listed in this notice has applied for the Board's approval under section 3 of the Bank Holding Company Act (12 U.S.C. 1842) and § 225.14 of the Board's Regulation Y (12 CFR 225.24) to become a bank holding company or to acquire a bank or bank holding company. The factors that are considered in acting on the applications are set forth in section 3(c) of the Act (12 U.S.C. 1842(c)).

The application is available for immediate inspection at the Federal Reserve Bank indicated. Once the application has been accepted for processing, it will also be available for inspection at the offices of the Board of Governors. Interested persons may express their views in writing to the Reserve Bank indicated for that application or to the offices of the Board of Governors. Any comment on an application that requests a hearing must include a statement of why a written presentation would not suffice in lieu of a hearing, identifying specifically any questions of fact that are in dispute and summarizing the evidence that would be presented at a hearing.

Comments regarding this application must be received not later than August 1, 1986.

A. **Federal Reserve Bank of Richmond** (Lloyd W. Bostian, Jr., Vice President) 701 East Byrd Street, Richmond, Virginia 23261:

1. *Premier Bankshares Corporation*, Wytheville, Virginia; to become a bank holding company by acquiring 100 percent of the voting shares of Tazewell National Bank, Tazewell, Virginia, and Bank of Speedwell, Incorporated, Speedwell, Viriginia.

Board of Governors of the Federal Reserve System, July 3, 1986.

William W. Wiles,

Secretary of the Board.

[FR Doc. 86-15482 Filed 7-8-86; 8:45 am]

BILLING CODE 6210-01-M

DEPARTMENT OF HEALTH AND HUMAN SERVICES

Food and Drug Administration

[Docket No. 86M-0259]

American Edwards Laboratories; Premarket Approval of Hybrid Percutaneous Transluminal Coronary Angioplasty Catheter

AGENCY: Food and Drug Administration.

ACTION: Notice.

SUMMARY: Food and Drug Administration (FDA) is announcing its approval of the application by American Edwards Laboratories, Santa Ana, CA, for premarket approval, under the Medical Device Amendments of 1976, of the Hybrid Percutaneous Transluminal Coronary Angioplasty Catheter. After reviewing the recommendation of the Circulatory System Devices Panel, FDA's Center for Devices and Radiological Health (CDRH) notified the applicant of the approval of the application.

DATE: Petitions for administrative review by August 8, 1986.

ADDRESS: Written requests for copies of the summary of safety and effectiveness data and petitions for administrative review to the Docket Management Branch (HFA-305), Food and Drug Administration, Rm. 4-62, 5600 Fishers Lane, Rockville, MD 20857.

FOR FURTHER INFORMATION CONTACT: Shang W. Hwang, Center for Devices and Radiological Health (HFZ-450), Food and Drug Administration, 8757 Georgia Ave., Silver Spring, MD 20910, 301-427-7559.

SUPPLEMENTARY INFORMATION: On January 22, 1986, American Edwards Laboratories, Santa Ana, CA 92711, submitted to CDRH an application for premarket approval of American Edwards Laboratories' Hybrid Percutaneous Transluminal Coronary Angioplasty Catheter. The device is indicated for balloon dilatation of the atheromatous, stenotic portion of a coronary artery affected by atherosclerosis in patients who are suitable candidates for coronary artery bypass graft surgery, and who meet certain selection criteria.

On April 21, 1986, the Circulatory System Devices Panel, an FDA advisory committee, reviewed and recommended approval of the application. On May 30, 1986, CDRH approved the application by a letter to the applicant from the Director of the Office of Device Evaluation, CDRH.

A summary of the safety and effectiveness data on which CDRH based its approval is on file in the Docket Management Branch (address above) and is available from that office upon written request. Requests should be identified with the name of the device and the docket number found in brackets in the heading of this document.

A copy of all approved labeling is available for public inspection at CDRH—contact Shang W. Hwang (HFZ-450), address above.

Opportunity for Administrative Review

Section 515(d)(3) of the Federal Food, Drug, and Cosmetic Act (the act) (21 U.S.C. 360e(d)(3)) authorizes any interested person to petition, under section 515(g) of the act (21 U.S.C.

360e(g)), for administrative review of CDRH's decision to approve this application. A petitioner may request either a formal hearing under Part 12 (21 CFR Part 12) of FDA's administrative practices and procedures regulations or a review of the application and CDRH's action by an independent advisory committee of experts. A petition is to be in the form of a petition for reconsideration under § 10.33(b) (21 CFR 10.33(b)). A petitioner shall identify the form of review requested (hearing or independent advisory committee) and shall submit with the petition supporting data and in formation showing that there is a genuine and substantial issue of material fact for resolution through administrative review. After reviewing the petition, FDA will decide whether to grant or deny the petition and will publish a notice of its decision in the **Federal Register**. If FDA grants the petition, the notice will state the issue to be reviewed, the form of review to be used, the persons who may participate in the review, the time and place where the review will occur, and other details.

Petitioners may, at any time on or before August 8, 1986, file with the Dockets Management Branch (address above) two copies of each petition and supporting data and information, identified with the name of the device and docket number found in brackets in the heading of this document. Received petitions may be seen in the office above between 9 a.m. and 4 p.m., Monday through Friday.

This notice is issued under the Federal Food, Drug, and Cosmetic Act (secs. 515(d), 520(h), 90 Stat. 554–555, 571 (21 U.S.C. 360e(d), 360j(h)) and under authority delegated to the Commissioner of Food and Drugs (21 CFR 5.10) and redelegated to the Director, Center for Devices and Radiological Health (21 CFR 5.53).

Dated: June 30, 1986.

John C. Villforth,

Director, Center for Devices and Radiological Health.

[FR Doc. 86–15393 Filed 7–8–86; 8:45 am]

BILLING CODE 4160–01–M

Health Care Financing Administration

Medicaid Program; Hearing; Reconsideration of Disapproval of a Texas State Plan Amendment

AGENCY: Health Care Financing Administration (HCFA), HHS.

ACTION: Notice of hearing.

SUMMARY: This notice announces an administrative hearing on August 12, 1986 in Dallas, Texas to reconsider our decision to disapprove Texas State Plan Amendment 85–6.

CLOSING DATE: Requests to participate in the hearing as a party must be received by the Docket Clerk by July 24, 1986.

FOR FURTHER INFORMATION, CONTACT: Docket Clerk, Hearing Staff, Bureau of Eligibility, Reimbursement and Coverage, 365 East High Rise, 6325 Security Boulevard, Baltimore, Maryland 21207, Telephone (301) 594–8261.

SUPPLEMENTARY INFORMATION: This notice announces an administration hearing to reconsider our decision to disapprove a Texas State Plan Amendment.

Section 1116 of the Social Security Act and 45 CFR Parts 201 and 213 establish Department procedures that provide an administrative hearing for reconsideration of a disapproval of a State plan or plan amendment. HCFC is required to publish a copy of the notice to a State Medicaid Agency that informs the agency of the time and place of the hearing and the issues to be considered. (If we subsequently notify the agency of additional issues which will be considered at the hearing, we will publish that notice.)

Any individual or group that wants to participate in the hearing as a party must petition the Hearing Officer within 15 days after publication of this notice, in accordance with the requirement contained in 45 CFR 213.15(b)(2). Any interested person or organization that wants to participate as amicus curiae must petition the Hearing Officer before the hearing begins in accordance with the requirements contained in 45 CFR 213.15(c)(1).

If the hearing is later rescheduled, the Hearing Office will notify all participants.

Texas' proposed plan 85–6 would add coverage for nurse-midwife services, but limits nurse-midwife delivery services to an institutional setting or special facility licensed and approved for participation. The proposal specifically excludes home delivery and nurse-midwives and substantially limits the opportunity for direct billing by nurse-midwives. Further proposed conditions include a requirement for formal collaborative agreements between nurse-midwives and physicians who are title XIX providers. The issue in this matter is whether Texas' proposed plan violates section 1905(a)(17), 1905(m) and 1902(a)(10) of the Social Security Act and Federal regulations at 42 CFR 440.165 and 441.21.

In Texas, the practice of nurse-midwive services is defined under the authority of the Texas State Board of Nurse Examiners which promulgates rules and standards. Review of those rules indicates no exclusion of home deliveries from the scope of services currently performed by nurse-midwives in Texas. Both the Medicaid statute (section 1905(a)(17), 1905(m) and 1902(a)(10) of the Social Security Act) and regulations (42 CFR 440.165(a)(2)) provide for nurse-midwife services to be furnished within the scope of practice authorized by State law or regulation. Since home delivery by nurse-midwives is not prohibited under Texas statues, the plan's effect would unacceptably restrict the availability and accessibility of nurse-midwive services for women eligible for Medicaid who might wish to avail themselves of nurse-midwife delivery services in a home setting. Therefore, HCFA has determined that Texas SPA 85–6 violates sections 1905(a)(17), 1905(m), and 1902(a)(10) of the Social Security Act and Federal regulations at 42 CFR 440.165(a)(2).

The conditions for reimbursing nurse-midwife services described by the plan would all but eliminate direct reimbursement to a nurse-midwife for Medicaid services. Title XIX and implementing regulations require that States offer direct reimbursement to nurse-midwives as a payment option. Federal regulations at 42 CFR 441.21 require that, as a payment option, a nurse-midwife may enter into an independent provider agreement with the State Medicaid agency regardless of whether the nurse-midwife is under the supervision of or in association with a physician or other health care provider. Texas is required to offer direct reimbursement to a nurse-midwife as it would any other individual practitioner. Therefore, HCFA has determined Texas has determined SPA 85–6 violates Federal regulations at 42 CFR 441.21.

As a further condition, the proposed plan mandates a written collaborative agreement with a Title XIX participating physician as a condition of nurse-midwife participation. Federal regulations at 42 CFR section 440.165(a)(3) define nurse midwife services a services that "unless required by State law or regulations or a facility, are reimbursed without regard to whether the nurse-midwife is under the supervision of, or associated with, a physician or other health care provider." No such structured condition is imposed as a condition of nurse-midwife services under the Texas nurse Practice Act. Therefore, HCFA has determined Texas

SPA 85–6 violates Federal regulations at 42 CFR section 440.165(a)(3).

The notice to Texas announcing an administrative hearing to reconsider our disapproval of its State plan amendment reads as follows:

Mr. Marlin Johnston, Commissioner,
Texas Department of Human Services, P.O. Box 2960, Mail Stop 000–W, Austin, Texas 78769.

Dear Mr. Johnston: This is to advise you that your request for reconsideration of the decision to disapprove Texas State Plan Amendment 85–6 was received on June 9, 1986.

Texas SPA 85–6 proposes to add coverage for nurse-midwife services, but to limit nurse-midwife delivery services to an institutional setting or special facility licensed and approved for participation. The proposal specifically excludes home delivery by nurse-midwives and substantially limits the opportunity for direct billing by nurse-midwives. Further proposed conditions include a requirement for formal collaborative agreements between nurse-midwives and physicians who are Title XIX providers.

You have requested a reconsideration of whether the plan amendment conforms to the requirements for approval under the Social Security Act and pertinent Federal regulations. The issues to be considered at the hearing are: (1) whether the proposed plan amendment violates sections 1905(a)(17), 1905(m), and 1902(a)(10) of the Social Security Act and regulations at 42 CFR 440.165(a)(2) which provide for nurse-midwife services to be furnished within the scope of practice authorized by State law and regulation and (2) whether the proposed plan violates Federal regulations at 42 CFR 440.165(a)(3) which defines nurse-midwife services as services that "unless required by State law or regulations or a facility, are reimbursed without regard to whether the nurse-midwife is under the supervision of or associated with, a physician or other health care provider."

I am scheduling a hearing on your request to be held on August 12, 1986 at 10:00 a.m. in Room 1105, 1200 Main Tower Building, Dallas, Texas. If this date is not acceptable, we would be glad to set another date that is mutually agreeable to the parties.

I am designating Mr. Albert Miller as the presiding official. If these arrangements present any problems, please contact the Docket Clerk. In order to facilitate any communication which may be necessary between the parties to the hearing, please notify the Docket Clerk of the names of the individuals who will represent the State at the hearing. The Docket Clerk can be reached at (301) 594–8261.

Sincerely,

William L. Roper, M.D.,
Administrator.

(Section 1116 of the Social Security Act (42 U.S.C. 1316))

(Catalog of Federal Domestic Assistance Program No. 13.714, Medical Assistance Program)

Dated: July 3, 1986.

William L. Roper,
Administrator, Health Care Financing Administration.

[FR Doc. 86–15464 Filed 7–8–86; 8:45 am]

BILLING CODE 4120-01-M

Health Resources and Services Administration

National Advisory Council on Health Professions Education; Meeting

In accordance with section 10(a)(2) of the Federal Advisory Committee Act (Pub. L. 92–463), announcement is made of the following National Advisory body scheduled to meet during the month of July 1986:

Name: National Advisory Council on Health Professions Education.
Date and Time: July 28, 1986, 9:00 a.m.
Place: Conference Room G, Parklawn Building, 5600 Fishers Lane, Rockville, Maryland 20857.

Open on July 28, 1986, 9:00 a.m. to 12:00 p.m.

Closed for the remainder of meeting.

Purpose: The Council advises the Secretary with respect to the administration of programs of financial assistance for the health professions and makes recommendations based on its review of applications requesting such assistance. This also involves advices in the preparation of regulations with respect to policy matters.

Agenda: The open portion of the meeting will cover: welcome and opening remarks; report of the Acting Administrator; report of the Director, Bureau of Health Professions; financial management update; discussion on Council issues and priorities, update on Medicare Reimbursement issues and future agenda items. The meeting will be closed to the public on July 28, at 12:00 p.m. for the remainder of the meeting, for the review of grant application for Family Medicine Departments, Public Health Capitation and Special Education Initiatives including Geriatric Education Centers. The closing is in accordance with the provisions set forth in section 552b(c)(6), Title 5, U.S. Code, and the Determination by the Acting Administrator, Health Resources and Services Administration, pursuant to Pub. L. 92–463.

Anyone wishing to obtain a roster of members, minutes of meetings, or other relevant information should write to or contact Mr. Robert L. Belsley, Executive Secretary, National Advisory Council on Health Professions Education, Bureau of Health Professions, Health Resources and Services Administration, Room 8C–22, Parklawn Building, 5600 Fishers Lane, Rockville, Maryland 20857, Telephone (301) 443–6880.

Agenda items are subject to change as priorities dictate.

Dated: July 2, 1986.

Jackie E. Baum,
Advisory Committee Management Officer, HRSA.

[FR Doc. 86–15394 Filed 7–8–86; 8:45 am]

BILLING CODE 4160-15-M

National Institutes of Health

Biomedical Research Technology Review Committee; Meeting

Pursuant to Pub. L. 92–463, notice is hereby given of the meeting of the Biomedical Research Technology Review Committee (BRTRC), Division of Research Resources (DRR), July 17, 1986, 9:00 a.m., Conference Room 8, Building 31, National Institutes of Health, 9000 Rockville Pike, Bethesda, Maryland 20892.

This meeting will be open to the public on July 17 from 9:00 a.m. to approximately 11:00 a.m. during which time there will be comments by the Director, DRR; a status report on the Biomedical Research Technology Program; and discussions on animal welfare issues and regulations; status of the Shared Instrumentation Grant Program; PROPHET II status; and status of the Small Grant Program. Attendance will be limited to space available.

In accordance with the provisions set forth in sections 552b(c)(4) and 552b(c)(6), Title 5, U.S. Code and section 10(d) of Pub. L. 92–463, the meeting will be closed to the public from approximately 11:00 a.m. on July 17 until adjournment for the review, discussion, and evaluation of individual research grant applications. The applications and the discussions could reveal confidential trade secrets or commercial property such as patentable material, and personal information concerning individuals associated with the applications, the disclosure of which would constitute a clearly unwarranted invasion of personal privacy.

Mr. James Augustine, Information Officer, Division of Research Resources, Bldg. 31, Rm. 5B–10, National Institutes of Health, Bethesda, MD 20892, (301) 496–5545, will provide a summary of the meeting and a roster of committee members upon request. Dr. Caroline Holloway, Executive Secretary, Biomedical Research Technology Review Committee, Division of Research

Resources, Bldg. 31, Rm. 5B-41, National Institutes of Health, Bethesda, MD 20892, (301) 496-5411, will furnish substantive program information upon request.

Dated: July 7, 1986.

(Catalog of Federal Domestic Assistance Program No. 13.371, Biotechnology Research, National Institutes of Health)

Betty J. Beveridge,

NIH Committee Management Officer.

[FR Doc. 86-15615 Filed 7-8-86; 8:45 am]

BILLING CODE 4140-01-M

DEPARTMENT OF THE INTERIOR

Fish and Wildlife Service

Record of Decision for Management of the Charles M. Russell National Wildlife Refuge, Montana

AGENCY: Fish and Wildlife Service, Interior.

ACTION: Notice.

SUMMARY: This notice makes available to the public the Record of Decision (ROD) signed April 22, 1986, on management of the Charles M. Russell (CMR) National Wildlife Refuge in Montana. The ROD was prepared in accordance with the Council on Environmental Quality regulations in 40 CFR 1505.2. The ROD reflects the recommendations of the Fish and Wildlife Service (FWS) to the Assistant Secretary for Fish and Wildlife and Parks. The recommendations of the FWS were based on the information contained in the final environmental impact statement (EIS) which was filed with the Environmental Protection Agency in November of 1985, and became available to the public during that month. The ROD selected alternative B of the proposal as the best alternative for meeting the mandates of Executive Order 7509, Pub. L. 94-233, the National Wildlife Refuge System Administration Act of 1966 (NWRSAA), other applicable legal requirements and associated court rulings. This decision would allocate about 63 percent of available forage to wildlife, leaving 37 percent for livestock. This represents a change from current wildlife forage allocations of about 18 percent. The guidelines representing alternative B are contained in Appendix A printed as part of this notice.

FOR FURTHER INFORMATION CONTACT: Ralph F. Fries, Refuge Manager, Charles M. Russell National Wildlife Refuge, P.O. Box 110, Lewistown, Montana 59457. The telephone number is 406/538-8706.

SUPPLEMENTARY INFORMATION: CMR was jointly managed by the Bureau of Land Management (BLM) and FWS until 1976, when Pub. L. 94-233 turned over responsibility for all management to the FWS. Prior to 1976, livestock on the refuge was managed under terms of the Taylor Grazing Act by BLM; since then FWS management has been conducted under the authority of the NWRSAA.

A CMR draft EIS, describing management of the grazing program at CMR, was originally prepared in response to litigation filed in United States District Court for the District of Columbia, *Natural Resources Defense Council, Inc., et al.* vs. *Rogers C.B. Morton, et al.*, 388 F. Supp. 829 (D.D.C. 1974), *aff'd* 527 F.2d 1386 (D.C. Cir. 1976). Publication of the final EIS was delayed due to subsequent court action. (*Schwenke, et al.*, vs. *Secretary of the Interior, et al.*). On January 14, 1982, the United States District Court for the District of Montana ruled that CMR must still be administered under the Taylor Grazing Act. This was overturned by the United States Court of Appeals, for the Ninth Circuit, 720 F.2d 571 (9th Cir. 1983). The appeals court ruled: (1) Wildlife has priority to forage up to limits specified in Executive Order 7509 (E.O. 7509 established CMR—then Fort Peck Game Range—in 1936); beyond those limits, wildlife and livestock have equal priority; and (2) CMR is to be administered under the NWRSAA.

Management complexities at CMR are further compounded by the presence of State and private inholdings, U.S Army Corps of Engineers-administered recreation areas on the reservoir, three State parks, and a segment of a BLM-managed Wild and Scenic River. At present there are 65 refuge grazing allotments with 88 permittees, five of which reside on private inholdings on the refuge.

This Record of Decision is based on the final EIS on management of CMR, dated August 1985. It also considers the comments received from the public during the Fish and Wildlife Service's scoping process, comments resulting from the public meetings and circulation of the draft EIS during August 1980, comments responding to a second draft EIS in February 1984, and an interagency working group that reviewed the second draft EIS and its associated comments.

Alternatives Considered

The Five Alternatives described in the final EIS for long range management of the refuge are:

—Alternative A would continue current management programs with an allocation formula that assigns approximately 45 percent of available forage to wildlife and 55 percent to livestock.

—Alternative B (Proposed Action) would allocate about 63 percent of available forage to wildlife, leaving 37 percent for livestock.

—Alternative C would significantly enhance management for wildlife, but would reduce livestock grazing by approximately 50 percent (27 percent of available forage allocated to livestock).

—Alternative D would allocate available forage equally to wildlife and livestock (i.e., 50 percent to each).

—Alternative E would phase out livestock grazing on the refuge and all forage would be available for wildlife.

Basis for Decision

Alternative B has been selected as the preferred alternative with implementation planned as stated in Appendix A below. This alternative meets the mandates of Executive Order 7509, Pub. L. 94-233, the NWRSAA, other applicable legal requirements, and associated court rulings. This alternative also recognizes that appropriate livestock use is consistent with the primary wildlife purposes of the refuge and describes a management program that integrates this use to accommodate legal, policy, and practical considerations.

As stated in Appendix A, ultimate grazing management regimes will be described in habitat management plans that will be prepared by the FWS and coordinated with affected entities.

Appendix A

Terms and Conditions for Implementation Decision: Grazing management actions planned for CMR under the proposed action include:

—The goal is to develop Habitat Management Plans (HMPs) for each allotment by 1989 and to reduce the total grazing animal unit months (AUMs) by approximately 33% by the end of the 1990 grazing season, except that the AUM decrease proposed for each allotment may be increased or further decreased if, upon implementation of the HMPs and proposed grazing management facilitates, it is shown that livestock grazing AUM adjustments are appropriate to meet wildlife objectives under the preferred alternative.

—Forage in AUMs currently assigned to domestic livestock for each refuge allotment and targeted levels are

listed in Appendix A-1 (attached). Reductions in AUMs in each allotment will be 20 percent each year beginning with the 1987 grazing season and will be completed by the end of the 1990 grazing season. These reductions will be a critical first step toward bringing the refuge grazing program into compliance with the Executive under and subsequent judicial directives. This phased implementation schedule will also allow ranchers to make necessary adjustments in their operations.

—HMPs will be developed beginning in 1986 with allotments that are to receive the greatest decreases and, upon FWS approval, will be implemented the next grazing season. These HMPs will consider, as appropriate, both refuge and off-refuge lands as habitat management units.

—The HMPs will be designed to "fine tune" the management of each unit to assure that specific forage allocation targets are correct, and that forage utilization is managed in a manner that is most sensitive to wildlife, livestock, and public needs. Completion and ultimate approval of the HMPs will be premised on a high level of consultation and coordination with affected livestock permittees, BLM, State Land Board, and other affected entities. However, ultimate approval shall be vested in the FWS.

—The HMPs will include, but not be limited to, the following elements that will provide for meeting wildlife objectives:

1. Grazing management alternatives that consider stocking rate adjustments, seasons of use, deferred, rest rotation or other systems.

2. Construction of management facilities such as fences, water development, water transport systems, and habitat exclosures.

3. Other habitat management practices such as prescribed burning and farming.

4. Provisions for monitoring and evaluating the implementation of HMPs.

—Ideally, the wildlife objectives for the refuge will be met with minimal impact to associated ranching operations. In cases where it is not possible to craft a plan acceptable to all affected parties, action on the part of FWS will be taken to assure that refuge wildlife objectives are met.

—Upon completion of the HMPs and associated AUM reductions in each allotment, the FWS will provide the additional option of three to five-year grazing permits.

Other detailed management plans will be developed as needed to meet other refuge objectives and may include cooperative public use management plans, farming plans, and a variety of wildlife enhancement plans.

Conclusion

Based upon a careful review and consideration of the EIS, public comments on both the EIS and the proposed regulations and other relevant factors, I have selected alternative B as the best alternative for management of the Charles M. Russell National Wildlife Refuge, Montana.

Dated: July 2, 1986.

Susan Recce,

Acting Assistant Secretary for Fish and Wildlife and Parks.

Appendix A-1

Assigned Federal stocking levels in livestock AUMs by allotment for the Charles M. Russell National Wildlife Refuge.

Allotment number and name	Proposed AUMs	Present AUMs
1. Antelope Creek	262	642
2. East Slippery Ann	794	1602
3. Rock Creek	1021	1664
4. Nichols Coulee	3637	5181
5. Beauchamp Creek	488	488
6. Fourchette Creek	37	84
7. North Hawley Creek	11	11
8. Telegraph Creek	676	757
9. UL Bend	1080	1080
10. Box Elder No. 3	47	54
11. Box Elder	102	199
12. Kill Woman	336	336
13. Larb Hills	420	420
14. Carpenter Creek	1451	2736
15. Cabin Coulee	1163	2044
16. 7 Point	1633	1919
17. Silver Dollar	348	656
18. Skunk Coulee/Mud Creek [1]	1056	1056
19. Duck Creek	350	436
20. Fort Peck Common	186	238
21. Bear Creek	430	430
22. Bobcat Creek	631	1330
23. Spring Creek	437	674
24. Sand Arroyo/Rock Creek [1]	291	544
25. Rock Creek	200	437
26. Bug Creek	712	996
27. Nelson Creek	1282	1791
28. Pine Coulee	0	28
29. Big Dry	758	912
30. Snap Creek	634	1033
31. Lone Tree	353	552
32. Coyote Basin	1144	1846
33. Box Creek	936	936
34. Norville Creek	373	395
35. Spring Draw	283	353
36. Sage Creek Point	578	723
37. Penick Coulee	650	833
38. Gilbert Creek	1605	3676
39. Points Pasture	279	668
40. Crooked Creek	1523	1932
41. Hell Creek	1807	2255
42. Brownie Butte	202	525
43. Snow Creek	1223	1377
44. Hill Coulee	465	583
45. Billy Coulee	4	11
46. Billy Creek	229	355
47. Slaymaker	0	117
48. 7 Blackfoot	463	730
49. Herman Ridge	80	80
50. Devils Creek Common	430	627
51. Ghost Coulee	238	249
52. Deadman Coulee	229	405
53. Lost Coulee	599	599
54. Grass Coulee	867	1218
55. Germaine Coulee	650	900
56. 79 Trail	142	142
57. Deer Coulee	378	1141
58. Soda Creek	1011	2692
59. Musselshell Trail	462	1081
60. Hansen Flat	284	325
61. East Indian Butte	1180	1977
62. West Indian Butte	428	839
63. Mobridge	26	35
64. Two Calf	281	305
65. Judith River	16	48

[1] Allotments 18 and 24 are two separate allotments assigned to one operator.

[FR Doc. 86-15459 Filed 7-8-86; 8:45 am]

BILLING CODE 4310-55-M

Bureau of Land Management

[NV-020-06-4341-14]

Winnemucca District Advisory Council Meeting and Tour

Notice is hereby given in accordance with Pub. L. 92-463 that a meeting and tour of the Winnemucca District Advisory Council will be held on August 25 and 26, 1986. The tour will be conducted in Humboldt County, Winnemucca District, commencing at the Winnemucca District Office at 705 East Fourth Street, Winnemucca, Nevada 89445 at 7:30 a.m., August 25, and ending in the Mahogany Creek exclosure at 10:00 a.m., August 26, 1986. The meeting will be from 10:00 a.m. to 12:00 noon on August 26, 1986 in the Mahogany Creek exclosure. The primary purpose of the meeting and tour is to discuss and make recommendations on reparian areas.

The agenda for the meeting on August 26 will include:

(1) Update—Winnemucca District Manager;

(2) Election of Vice Chairman—Council Chairman; and

(3) Discussion and recommendations on managing riparian areas—Advisory Council.

The meeting and tour is open to the public. Interested persons may make oral statements to the Council at 11:00 a.m. on August 26, 1986 or file written statement for the Council's consideration. Anyone wishing to make an oral statement must notify the District Manager, 705 East Fourth Street, Winnemucca, Nevada 89445 by August 11, 1986. Depending on the number of persons wishing to make oral statements, a per-person time limit may be established by the District Manager.

Summary minutes of the Council meetings will be maintained in the Winnemucca District Office and available for public inspection (during regular business hours) within 30 days following the meeting.

Dated: June 30, 1986.

Frank C. Shields,

District Manager.

[FR Doc. 86-15409 Filed 7-8-86; 8:45 am]

BILLING CODE 4310-HC-M

Sale of Public Land in Yavapai County, AZ

Correction

In FR Doc. 86-12187 appearing on page 19615 in the issue of Friday, May 30, 1986, make the following corrections:

1. In the second column, seventh complete paragraph, eighth line, "free" should read "fee".
2. In the same paragraph, tenth line, "through" was misspelled.
3. In the ninth complete paragraph, in the sixth line, "except the mineral laws," should read "except the mineral leasing laws,".

BILLING CODE 1505-01-M

[CA-940-06-4212-13; CA 17137]

California; Exchange of Public and Private Lands in Mendocino, Inyo, and Mono Counties; Opening Order

AGENCY: Bureau of Land Management, Interior.

ACTION: Notice of issuance of land exchange conveyance document and order opening lands acquired in this exchange.

SUMMARY: The purpose of this exchange was to block up public lands within the Ridgecrest Resource Area to enhance their manageability and resource values.

FOR FURTHER INFORMATION CONTACT: Viola Andrade, California State Office, (916) 978-4815.

The United States issued an exchange conveyance document to the State of California on February 4, 1986, under the Federal Land Policy and Management Act of October 21, 1976 (90 Stat. 2756; 43 U.S.C. 1716), for the following described land:

Mount Diablo Meridian, California

T. 22 N., R. 14 W.,
Sec. 9, SW¼SW¼;
Sec. 19, lots 1, 2, 3, and 8, and NW¼NE¼.
T. 22 N., R. 15 W.,
Sec. 24, lot 1.
T. 23 N., R. 15 W.,
Sec. 32, lots 3, 4, 5, and 6, and SE¼NE¼.
Containing 405.75 acres.

In exchange for these lands, the United States acquired the following described land from the State of California:

Mount Diablo Meridian, California

T. 5 S., R. 36 E.,
Sec. 36.
T. 8 S., R. 36 E.,
Sec. 16, E½SW¼.
T. 6 S., R. 37 E.,
Sec. 36.
T. 6 S., R. 38 E.,
Sec. 16;
Sec. 36.
T. 7 S., R. 38 E.,
Sec. 16.
Containing 3,680.00 acres.

The values of the public land and non-Federal lands in this exchange are equal.

At 10 a.m. on August 11, 1986, the non-Federal lands described above shall be open to operation of the public land laws generally, subject to valid existing rights and the requirements of applicable law. All valid applications received at or prior to 10 a.m. on August 11, 1986, shall be considered as simultaneously filed at that time. Those received thereafter shall be considered in the order of filing.

At 10 a.m. on August 11, 1986, the non-Federal lands described above shall be open to applications under the United States mining laws and mineral leasing laws.

Inquiries concerning the land should be addressed to the Bureau of Land Management, Room E-2841, Federal Office Building, 2800 Cottage Way, Sacramento, California 95825.

Dated: June 30, 1986.

Sharon N. Janis,

Chief, Branch of Lands & Minerals Operations.

[FR Doc. 86-15474 Filed 7-8-86; 8:45 am]

BILLING CODE 4310-40-M

[M-66538]

Montana; Realty Action

AGENCY: Bureau of Land Management, Miles City District, Billings Resource Area Office, (MT-020-06-4212-13).

ACTION: Notice of Realty Action—Exchange of Public Lands in Musselshell County, Montana.

SUMMARY: The following described public lands have been determined to be suitable for disposal by exchange under section 206 of the Federal Land Policy and Management Act of 1976, 43 U.S.C. 1716:

Principal Meridian

T. 9 N., R. 25 E.,
Sec. 18, SE¼.
Sec. 19, NE¼.
Containing 320 acres.

In exchange for these lands, the United States Government will acquire the surface estate in the following described lands from Bryan and Kathy Adolph, Roundup, Montana.

Principal Meridian

T. 9 N., R. 25 E.,
Sec. 14, W½ W½;
Sec. 15, W½.
Containing 480 acres.

DATE: For a period of 45 days from the date of first publication of this notice, interested parties may submit comments to the District Manager, Bureau of Land Management, P.O. Box 940, Miles City, Montana 59301. Any adverse comments will be evaluated by the State Director who may vacate or modify this realty action and issue a final determination. In the absence of any action by the State Director, this realty action will become the final determination of the Department of Interior.

FOR FURTHER INFORMATION CONTACT: Information related to this exchange including the environmental assessment and land report, is available for review at the Billings Resource Area Office, 810 East Main Street, Billings, Montana 59105.

SUPPLEMENTARY INFORMATION: The publication of this notice segregates the public land described above from appropriation under the public land laws, including the mining laws, but not from exchange pursuant to section 206 of the Federal Land Policy and Management Act of 1976.

The exchange will be made subject to:

1. A reservation for ditches and canals constructed by the authority of the United States pursuant to the Act of August 30, 1890 (43 U.S.C. 945).
2. A reservation to the United States of all mineral values together with the right to explore, prospect for, mine and remove same under applicable laws and regulations.
3. All valid existing rights and reservations of record.
4. Value equalization by acreage adjustment.

The purpose of this exchange is to block up an isolated tract of public land. It will provide for a more efficient and cost-effective management. The public will benefit from better wildlife habitat and increased recreational opportunities. This exchange is consistent with the Bureau's planning for the lands involved and has been discussed with State and local officials.

Bruce Whitmarsh,

Acting District Manager.

[FR Doc. 86-15475 Filed 7-8-86; 8:45 am]

BILLING CODE 4310-DN-M

[ID-01Q-06-4212-14; I-19951, I-9953, I-19960, I-19961, I-19962, I-19963, I-19965, I-19966, I-19967, and I-19969]

Realty Actions; Sale of Public Land, Idaho

AGENCY: Bureau of Land Management, Idaho

ACTION: Notice of Realty Action, Sale of Public Land in Ada, Boise, and Gem Counties, Idaho.

DATE AND ADDRESS: The sale offering will be held on Tuesday, September 16, 1986, at 10:00 a.m. at the Boise District Office, 3948 Development Avenue, Boise, Idaho 83705. Unsold parcels will be offered every Tuesday through October 14, 1986, on which date this sale offering will be suspended. All sales will be made by modified competitive bidding procedures.

SUMMARY: The following-described lands have been examined and through the public-supported land use planning process have been determined to be suitable for disposal by sale pursuant to section 203 of the Federal Land Policy and Management Act of 1976, at no less than fair market value as determined by an appraisal:

Parcel	Legal description	Fair market value
	Boise Meridian	
I-19951	T. 5 N., R. 1 E., sec. 3, SW¼NW¼. Containing 40 acres.	$2,000.00
I-19953	T. 5 N., R. 1 E., sec. 7, SE¼NE¼, N½SE¼, SE¼SE¼; sec. 8, SW¼NW¼; Sec. 18, NE¼NE¼. Containing 240 acres.	12,000.00
I-19960	T. 5 N., R. 1 W., sec. 1, lot 4, SW¼NW¼, NW¼SW¼; sec. 2, lot 1, SE¼NE¼. Containing 197.06 acres.	9,850.00
I-19961	T. 5 N., R. 1 W., sec. 14, NW¼SW¼. Containing 40 acres.	2,000.00
I-19962	T. 5 N., R. 1 W., sec. 14, SE¼SE¼. Containing 40 acres.	2,000.00
I-19963	T. 5 N., R. 1 W., sec. 15, NW¼. Containing 160 acres.	6,400.00
I-19965	T. 6 N., R. 2 E., sec. 17, SE¼NE¼. Containing 40 acres.	2,000.00
I-19966	T. 6 N., R. 2 E., sec. 31, lot 1. Containing 38.81 acres.	1,950.00
I-19967	T. 6 N., R. 1 E., sec. 18, SW¼NE¼. Containing 40 acres.	2,000.00
I-19969	T. 6 N., R. 1 E., sec. 21, SE¼SW¼, S½SE¼; sec. 22, SW¼SW¼; sec. 27, W½NW¼; sec. 28, N½NE¼. Containing 320 acres.	12,800.00

When patented, the lands will be subject to the following reservations:

Parcel	Reservations
I-19951	1. Ditches and canals.
I-19965	2. Geothermal resources.
I-19966	3. All valid, existing rights and reservations of record.
I-19953	1. Ditches and canals.
I-19960	2. Oil, gas, and geothermal resources.
I-19961, I-19962, I-19963.	3. All valid, existing rights and reservations of record.
I-19967	1. Ditches and canals.
	2. Oil, gas, and geothermal resources.
	3. All valid, existing rights and reservations of record.
	4. Pursuant to the authority contained in Section (4) of Executive Order 11990 of May 24, 1977, and Section 203 of the Federal Land Policy and Management Act of 1976, this patent is subject to a restriction which constitutes a covenant running with the land, that the portion of the land lying within SW¼NE¼, sec. 18, T. 6 N., R. 1 E., Boise Meridian, Idaho, containing a developed spring must be managed to protect and maintain the wetland-riparian habitat and the spring development on a continuing basis.
I-19969	1. Ditches and canals.
	2. All minerals including oil, gas, and geothermal resources.
	3. All valid, existing rights and reservations of record.
	4. Reservation of right-of-way for Power Project 1971 withdrawn by Federal Power Commission order dated September 5, 1958, under authority of Section 24 of the Federal Power Act of June 10, 1920, 41 Stat. 1075, as amended, (16 U.S.C. 818).

Sale of each parcel will be subject to a temporary continued use of existing grazing privileges.

Continued use of the land by valid right-of-way holders is proper subject to the terms and conditions of the grant. Administrative responsibility previously held by the United States be assumed by the patentee.

The previously-described lands are hereby segregated from appropriation under the public land laws including the mining laws for a period of 270 days or until patent is issued, whichever comes first.

Sale Procedures

Sale parcels I-19951, I-19961, I-19962, I-19965, and I-19966 are being offered competitively with a preference to allow Spring Valley Livestock Co. to meet the highest bid. In order to exercise this preference, Spring Valley Livestock Co. must submit a bid by 4:30 p.m. the day before the sale. If a higher bid is received, they will be allowed 30 days from the sale date to meet the high bid. If no bid is received on the day before the sale date from the preference right bidder, the parcel will be subject to competitive bidding procedures as outlined below for sale parcels I-19951, I-19961, I-19962, I-19965, and I-19966. Failure to match the high bid within 30 days will void Spring Valley Livestock Co.'s preference and the next highest bidder will be awarded the sale.

Sale parcel I-19953 is being offered competitively with a preference to allow Spring Valley Livestock Co. and Highland Livestock and Land Co. to meet the highest bid. In order to exercise this preference, Spring Valley Livestock Co. or Highland Livestock and Land Co. must submit a bid by 4:30 p.m. the day before the sale. If a higher bid is received, they will be allowed 30 days from the sale date to meet the high bid. If no bid is received on the day before the sale date from the preference right bidders, the parcel will be subject to competitive bidding procedures as outlined below for sale parcel I-19953. Failure to match the high bid within 30 days will void Spring Valley Livestock Co. and Highland Livestock and Land Co.'s preference and the next highest bidder will be awarded the sale.

Sale parcels I-19960 and I-19963 are being offered competitively with a preference to allow Highland Livestock and Land Co. to meet the highest bid. In order to exercise this preference, Highland Livestock and Land Co. must submit a bid by 4:30 p.m. the day before the sale. If a higher bid is received, they will be allowed 30 days from the sale date to meet the high bid. If no bid is received on the day before the sale date from the preference right bidder, the parcel will be subject to competitive bidding procedures as outlined below for sale parcels I-19960 and I-19963. Failure to match the high bid within 30 days will void Highland Livestock and Land Co.'s preference and the next highest bidder will be awarded the sale.

Sale parcel I-19967 is being offered competitively with a preference to allow Warren J. Davis to meet the highest bid. In order to exercise this preference, Warren J. Davis must submit a bid by 4:30 p.m. the day before the sale. If a higher bid is received, he will be allowed 30 days from the sale date to meet the high bid. If no bid is received on the day before the sale date from the preference right bidders, the parcel will be subject to competitive bidding procedures as outlined below for sale parcel I-19967. Failure to match the high bid within 30 days will void Warren J. Davis' preference and the next highest bidder will be awarded the sale.

Sale parcel I-19969 is being offered competitively with a preference to allow the Estate of Jessie Little Naylor, Cecil Haynes, and Colin McLeod, Jr., to meet the highest bid. In order to exercise this preference, the Estate of Ms. Naylor, Mr. Haynes, or Mr. McLeod must submit a bid by 4:30 p.m. the day before the sale. If a higher bid is received, they will be allowed 30 days from the sale date to meet the high bid. If no bid is received on the day before the sale date from the preference right bidders, the parcel will be subject to competitive bidding procedures as outlined below for sale

parcel I-19969. Failure to match the high bid within 30 days will void the Estate of Ms. Naylor, Mr. Haynes, and Mr. McLeod's preference and the next highest bidder will be awarded the sale.

A sealed bid must be submitted in person or by mail prior to the date and time of sale in the Boise District Office located at 3948 Development Avenue, Boise, Idaho. The bid must be sealed in an envelope with the envelope specifying the serial number and the sale date in the lower left hand corner (i.e. "Sealed bid—public land sale I-19951—September 16, 1986"). If two or more valid sealed bids are received for the same amount and are the high bid, a supplemental bidding of the high bidders will be held.

Bids must be submitted for at least fair market value and will constitute an application to purchase that portion of the mineral estate of no known value for parcels I-19951, I-19953, I-19960, I-19961, I-19962, I-19963, I-19965, I-19966, and I-19967. A thirty percent (30%) deposit must accompany each bid and for parcels I-19951, I-19953, I-19960, I-19961, I-19962, I-19963, I-19965, I-19966 and I-19967 an additional $50.00 non-returnable mineral conveyance processing fee is required. The filing fee and deposit must be paid by certified check, money order, bank draft or cashier's check. Bids will be rejected if accompanied by a personal check.

SUPPLEMENTARY INFORMATION: Detailed information concerning the conditions of the sale can be obtained by contacting Effie Schultsmeier or Dick Geier at (208) 334-1582.

For a period of 45 days from the date of publication of this notice in the **Federal Register**, interested parties may submit comments to the District Manager, Bureau of Land Management, 3948 Development Avenue, Boise, Idaho 83705. Objections will be reviewed by the State Director who may sustain, vacate, or modify this realty action. In the absence of any objections, this realty action will become the final determination of the Department of Interior.

Dated: June 23, 1986.

J. David Brunner,

District Manger.

[FR Doc. 86-15407 Filed 7-8-86; 8:45 am]

BILLING CODE 4310-GG-M

[NV-930-06-4212-11; N-37119]

Nevada; Realty Action: Lease/Purchase for Recreation and Public Purposes, Clark County, NV

The following described public land in Las Vegas, Clark County, Nevada has been identified and examined and is hereby classified as suitable for lease/purchase under the Recreation and Public Purposes Act, as amended (43 U.S.C. 869 et seq.). The lands will not be offered for lease/purchase until at least 60 days after the date of publication of this notice in the **Federal Register.**

Mount Diablo Meridian, Nevada

T. 21 S., R. 60 E., Section 3
Lot 97
Containing 5.27 acres.

This parcel of land contains approximately 5.27 acres. The City of Las Vegas intends to use the land for park purposes. The lease and/or patent, when issued, will be subject to the provisions of the Recreation and Public Purposes Act and applicable regulations of the Secretary of the Interior, and will contain the following reservations to the United States:

1. A right-of-way thereon for ditches and canals constructed by the authority of the United States, Act of August 30, 1890, 26 Stat. 391, 43 U.S.C. 945.

2. All minerals shall be reserved to the United States, together with the right to prospect for, mine and remove such deposits from the same under applicable law and such regulations as the Secretary of the Interior may prescribe.

and will be subject to:

1. An easement for streets, roads and public utilities in accordance with the transportation plan for the City of Las Vegas.

The land is not required for any federal purpose. The lease/purchase is consistent with the Bureau's planning for this area.

Detailed information concerning this action is available for review at the office of the Bureau of Land Management, Las Vegas District, 4765 W. Vegas Drive, Las Vegas, Nevada.

Upon publication of this notice in the **Federal Register,** the above described land will be segregated from all forms of appropriation under the public land laws, including the general mining laws, except for recreation and public purposes and leasing under the mineral leasing laws.

For a period of 45 days from the date of publication of this notice in the **Federal Register,** interested parties may submit comments to the District Manager, Las Vegas District, P.O. Box 26569, Las Vegas, Nevada 89126. Any adverse comments will be reviewed by the State Director who may sustain, vacate, or modify this realty action. In the absence of any adverse comments, this realty action will become the final determination of the Department of the Interior.

Dated: June 18, 1986.

Ben F. Collins,

District Manager, Las Vegas, NV.

[FR Doc. 86-15479 Filed 7-8-86; 8:45 am]

BILLING CODE 4310-HC-M

Colorado; Filing of Plats of Survey

June 27, 1986.

The plats of survey of the following described land will be officially filed in the Colorado State Office, Bureau of Land Management, Denver, Colorado, effective 10:00 a.m., June 27, 1986.

The plat, in 2 sheets, representing the dependent resurvey of portions of the south boundaries, T. 40 N., Rs. 17 and 18 W., a portion of the west boundary, a portion of the subdivisional lines and certain tracts; the survey of the subdivision of certain sections, the survey of Parcel A, lot 10 in section 24, and the survey of Tract 46, T. 39 N., R. 18 W., New Mexico Principal Meridian, Colorado, Group No. 717, was accepted June 19, 1986.

The plat, in 2 sheets, representing the dependent resurvey of a portion of the Tenth Standard Parallel North (south boundary, T. 41 N., R. 18 W.), a portion of the east boundary, the west boundary, a portion of the subdivisional lines, and certain tracts; the survey of the subdivision of certain sections, and Parcel A, Tract 111, T. 40 N., R. 18 W., New Mexico Principal Meridian, Colorado, Group No. 717, was accepted June 19, 1986.

The plat representing the dependent resurvey of a portion of the sectional Guide Meridian a portion of the subdivisional lines, and the subdivision of section 36, T. 39 N., R. 19 W., New Mexico Principal Meridian, Colorado, Group No. 717, was accepted June 19, 1986.

The plat representing the dependent resurvey of a portion of the Tenth Standard Parallel North (south boundary, T. 41 N., R. 19 W.), a portion of the subdivisional lines and the survey of the subdivision of certain sections, T. 40 N., R. 19 W., New Mexico Principal Meridian, Colorado, Group No. 717, was accepted June 19, 1986.

The plat representing the dependent resurvey of portions of the east and subdivisional lines, and the survey of the subdivision of sections 26, 34, and 35, T. 41 N., R. 19 W., New Mexico Principal Meridian, Colorado, Group No. 717, was accepted June 19, 1986.

These surveys were executed to meet certain administrative needs of the Bureau of Reclamation.

The plats of survey of the following described land will be officially filed in

the Colorado State Office, Bureau of Land Management, Denver, Colorado, effective 10:00 a.m., September 5, 1986.

The plat representing the dependent resurvey of a portion of the Tenth Standard Parallel North (south boundary, T. 41 N., R. 11 W.), and the survey of Private Land Claims, T. 40 N., R. 11 W., New Mexico Principal Meridian, Colorado, Group No. 738, was accepted June 20, 1986.

The plat representing the dependent resurvey of a portion of the Tenth Standard Parallel North (south boundary, T. 41 N., R. 12 W.), the survey of Private Land Claims, and a Public Land Tract, and the independent resurvey of the east boundary, T. 40 N., R. 12 W., New Mexico Principal Meridian, Colorado, Group No. 738, was accepted June 20, 1986.

These surveys were executed to meet certain administrative needs of the U.S. Forest Service.

All inquiries about this land should be sent to the Colorado State Office, Bureau of Land Management, 2020 Arapahoe Street, Denver, Colorado 80205.

Jack A. Eaves,

Chief Cadastral Surveyor for Colorado.

[FR Doc. 86-15410 Filed 7-8-86; 8:45 am]

BILLING CODE 4310-84-M

[ES-940-06-4520-12; ES-036152, Group 91]

Michigan; Filing of Plat of Island Survey, Section 1 Stayed

July 1, 1986.

On Thursday, May 22, 1986, there was published in the **Federal Register**, Volume 51, on pages 18844-18845 a notice entitled "Michigan; Filing of Plat of Island Survey, Section 1". In said notice was a plat depicting the survey of an island located in Township 26 North, Range 10 West, Michigan Meridian, Michigan, accepted on May 2, 1986.

The official filing of the plat is hereby stayed, pending consideration of all protests.

Lane J. Bouman,

Deputy State Director for Cadastral Survey.

[FR Doc. 86-15408 Filed 7-8-86; 8:45 am]

BILLING CODE 4310-GJ-M

[WASH-02212; OR-943-06-4220-11:GP6-276]

Washington; Proposed Continuation of Withdrawal of Lands

AGENCY: Bureau of Land Management, Interior.

ACTION: Notice.

SUMMARY: The U.S. Department of Agriculture, Agriculture Research Service, proposes that a land withdrawal for the Moxee Quarantine Station continue for an additional 25 years. The land would remain closed to surface entry and mining; has been and would remain open to oil and gas leasing; and would be opened to all mineral leasing.

FOR FURTHER INFORMATION CONTACT: Champ Vaughan, BLM Oregon State Office, P.O. Box 2965, Portland, Oregon 97208, (Telephone 503-231-6905.

SUPPLEMENTARY INFORMATION: The U.S. Department of Agriculture, Agriculture Research Service, proposes that the existing land withdrawal made by Public Land Order No. 1453 of July 20, 1957, be continued for a period of 25 years pursuant to Section 204 of the Federal Land Policy and Management Act of 1976, 90 Stat. 2751, 43 U.S.C. 1714.

The land involved is located approximately 17 miles southeast of Yakima and contains 160 acres within Section 34, T. 12 N., R. 21 E., W.M., Yakima County, Washington.

The purpose of the withdrawal is to protect the Moxee Plant Introduction Quarantine Station. The withdrawal segregates the land from operation of the public land laws generally, including the mining laws and mineral leasing laws except oil and gas. No change is proposed in the purpose or segregative effect of the withdrawal except to open the land to all mineral leasing subject to surface occupancy restrictions.

For a period of 90 days from the date of publication of this notice, all persons who wish to submit comments, suggestions, or objections in connection with the proposed withdrawal continuation may present their views in writing to the undersigned officer at the address specified above.

The authorized officer of the Bureau of Land Management will undertake such investigations as are necessary to determine the existing and potential demand for the land and its resources. A report will also be prepared for consideration by the Secretary of the Interior, the President and Congress who will determine whether or not the withdrawal will be continued and if so, for how long. The final determination on the continuation of the withdrawal will be published in the **Federal Register**. The existing withdrawal will continue until such final determination is made.

Dated: June 27, 1986.

B. LaVelle Black,

Chief, Branch of Lands and Minerals Operations.

[FR Doc. 86-15411 Filed 7-8-86; 8:45 am]

BILLING CODE 4310-33-M

Minerals Management Service

Environmental Document Prepared for Proposed Oil and Gas Operations on the Pacific Outer Continental Shelf (OCS)

AGENCY: Minerals Management Service (MMS), U.S. Department of the Interior.

ACTION: Notice of the Availability of Environmental Document Prepared for an OCS Minerals Development and Production Plan on the Pacific OCS.

SUMMARY: The MMS, in accordance with Federal regulations (40 CFR 1501.4 and 1506.6) that implement the National Environmental Policy Act (NEPA), announces the availability of a NEPA-related Environmental Assessment (EA) and Finding of No Significant Impact (FONSI), prepared by the MMS for the following oil and gas development activity proposed on the Pacific OCS.

Activity/operator	Location	Date
Chevron U.S.A., Inc., Development and production platform and subsea pipelines, OCS-P 0205, Block 46N, 61W.	Nine nautical miles (14km) west-southwest of Port Hueneme and about 6.5 nautical miles (10.5 kn) from the east end of Anacapa Island, Santa Barbara Channel, California.	June 19, 1986.

Persons interested in reviewing the environmental document for the proposal listed above or obtaining information about EAs and FONSIs prepared for activities on the Pacific OCS are encouraged to contact the MMS office in the Pacific OCS Region.

FOR FURTHER INFORMATION CONTACT: Regional Supervisor, Office of Leasing and Environment, Minerals Management Service, Pacific OCS Region, 1340 West Sixth Street, Mail Stop 300, Los Angeles, California, 90017, telephone (213) 894-6775.

SUPPLEMENTARY INFORMATION: The MMS prepares EAs and FONSIs for proposals which relate exploration for the development/production of oil and gas resources on the Pacific OCS. The EAs examine the potential environmental effects of activities described in the proposals and present MMS conclusions regarding the significance of those effects. The EA is used as a basis for determining whether or not approval of the proposals constitutes major Federal actions that significantly affect the quality of the human environment in the sense of NEPA 102(2)(C). A FONSI is prepared in those instances where the MMS finds

that approval will not result in significant effects on the quality of the human environment. The FONSI briefly presents the basis for that finding and includes a summary or copy of the EA.

This Notice constitutes the public Notice of Availability of environmental documents required under the NEPA regulations.

Dated: June 26, 1986.

William E. Grant,

Regional Director, Pacific OCS Region.

[FR Doc. 86-15412 Filed 7-8-86; 8:45 am]

BILLING CODE 4310-MR-M

National Park Service

Appalachian National Scenic Trail Relocations of Rights-of-Way

AGENCY: National Park Service, Interior.

ACTION: Notice of relocations.

SUMMARY: The proposed relocations set forth below are deemed necessary to preserve the purpose for which the Appalachian National Scenic Trail was established. As a part of the program to protect and establish an Appalachian Trail corridor the Department of the Interior, in consultation with affected landowners, trail clubs, and State and Federal Government representatives, has determined that where the Trail is now along roads, close to houses or otherwise poorly located, the National Park Service, will seek an alternative location. When necessary, an alternative Trail route will be located outside the existing right-of-way pursuant to section 7 of the National Trails System Act, which established a process for necessary relocations after publication of a notice in the **Federal Register** and appropriate consultation.

DATES: Written comments, suggestions or objections will be accepted on or before August 8, 1986.

ADDRESS: Comments should be directed to: Project Manager, Appalachian Trail Project Office, Harpers Ferry, West Virginia 25425.

FOR FURTHER INFORMATION CONTACT: David Richie, Manager, Appalachian Trail Project, Telephone (304) 535-2346.

SUPPLEMENTARY INFORMATION:

Background

The National Trails System Act became law on October 2, 1968. The Act created a system to identify and establish a National Trails System. It also established the Pacific Crest Trail and the Appalachian Trail as the initial National Scenic Trails.

Section 7 of the National Trails System Act created a process for the administration and development of National Scenic Trails. This process included the responsibility to select an initial right-of-way for the National Scenic Trails and to publish a Notice of this right-of-way in the **Federal Register** together with appropriate maps and descriptions. In selecting this right-of-way, the Secretary was required to obtain the advice and assistance of the States, local governments, private organizations, landowners, and land users concerned. For a two-year period after selection, he was also required to withhold Federal action and to encourage the states of local governments involved (1) to enter into written cooperative agreements with landowners, private organizations and individuals to provide the necessary Trail right-of-way, or (2) to acquire such lands or interests therein to be utilized as segments of the National Scenic Trail. These responsibilities for the Appalachian Trail have been completed. A preliminary right-of-way and Trail route was selected after compliance with the consultation requirements of the Act and published in the **Federal Register**, Vol. 36, No. 197, Saturday, October 9, 1971. The states and local governments have subsequently had the opportunity to act to protect the Trail.

Changes in the Trail route within the previously established right-of-way are routinely made. Section 7 also established a process for necessary relocations of the right-of-way after publication of a Notice in the **Federal Register**. This process includes the responsibility to relocate segments of a National Scenic Trail right-of-way if such a relocation is necessary to preserve the purpose for which the Trail was established.

On March 21, 1978, Pub. L. 95-248 was enacted amending the original National Trails System Act. The thrust of this amendment was to further the Federal protection efforts under the original legislation, calling for an immediate Federal land acquisition program.

The original Act was further amended by Pub. L. 95-625, dated, November 10, 1978. This Act eliminated the requirement for the Federal Government to wait two years after notice of selection of the right-of-way before acquisition could be initiated. We are kept advised on any action by states or localities to protect the Trail where relocations are involved.

As a part of this program to protect and establish an Appalachian Trail corridor the Department of the Interior, in consultation with landowners, trail clubs, and government representatives, has determined that where the Trail is along roads, close to houses or otherwise poorly located, the National Park Service, will seek an alternative location, wherever possible, either pursuant to a change in Trail route, if feasible, within the existing right-of-way, or pursuant to the process outlined above by publishing a Notice of right-of-way relocation in the **Federal Register** after appropriate consultation.

Consistent with this decision, the right-of-way for the following section of the Appalachian National Scenic Trail will be relocated outside of the originally designated right-of-way to facilitate a revised Trail route that takes advantage of the terrain and environment so that this portion of the Trail meets the criteria and the purpose for which this Trail was established.

Pennsylvania

Beginning on the southerly side of the Pennsylvania Turnpike, running southeasterly and southwesterly, passing over Pennsylvania State Routes Nos. 641 and 74, to Pennsylvania State Route No. 174, continuing westerly on the northerly side of Route No. 174, passing over Route No. 174, and then southerly passing by Boiling Springs Lake to Long Mountain, as indicated in Panels 428, 429, 430, 430A, 430B, and 431.

Appropriate maps, as designated above, are provided as an appendix to this Notice to indicate the revised right-of-way and the Trail route within this right-of-way. This change is in compliance with provisions of section 7 of the National Trails System Act, as amended, as discussed above.

Affected landowners have been contacted and afforded an opportunity

to provide us their advice and assistance in selection of this revised right-of-way and the Trail routes within this right-of-way. In addition, the right-of-way and Trail route have been selected in consultation with members of the Advisory Council for the Appalachian National Scenic Trail and with state and local officials.

The purpose of this notice is to request further public comment in the proposed relocation of the Trail right-of-way and Trail route. An environmental assessment report relating to this relocation is on file in the Project Manager's Office, Appalachian Trail Project Office, Harpers Ferry, West Virginia 25425. Comments concerning this relocation may also be provided to the Project Manager on or before August 8, 1986.

Following review of comments on this relocation, a decision regarding findings of significant impact pertaining to this relocation and its implementation, will be published.

William Penn Mott, Jr.,

Director, National Park Service.

BILLING CODE 4310-70-M

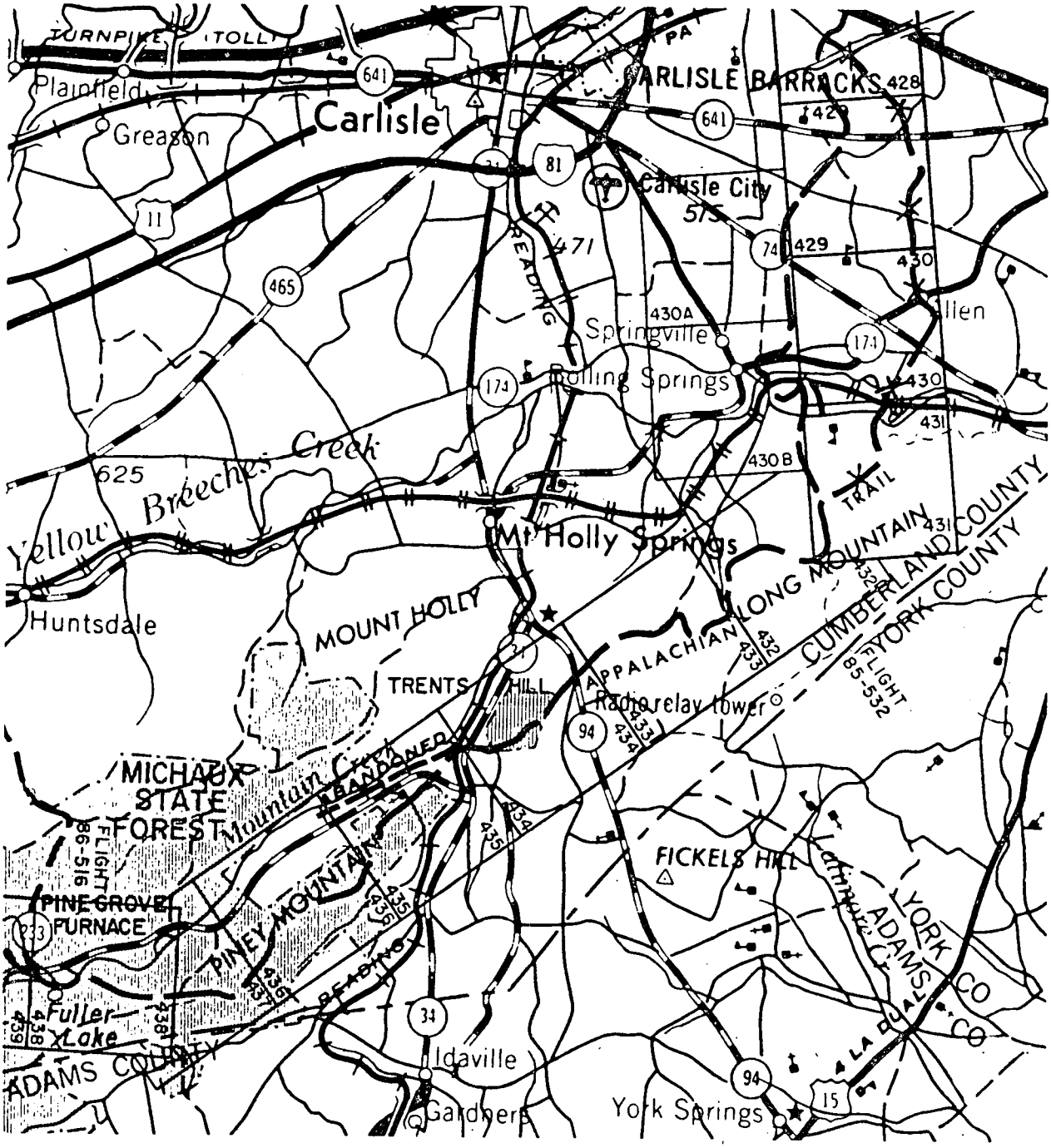

N

Pennsylvania

APPALACHIAN TRAIL

SCALE: 1 1/2 0 1 2 3 MILES

DETAIL MAP REFERENCE 88/89

PRIVATE

FEDERAL

STATE

TRAIL

ABANDONED TRAIL

MAP NO. 45

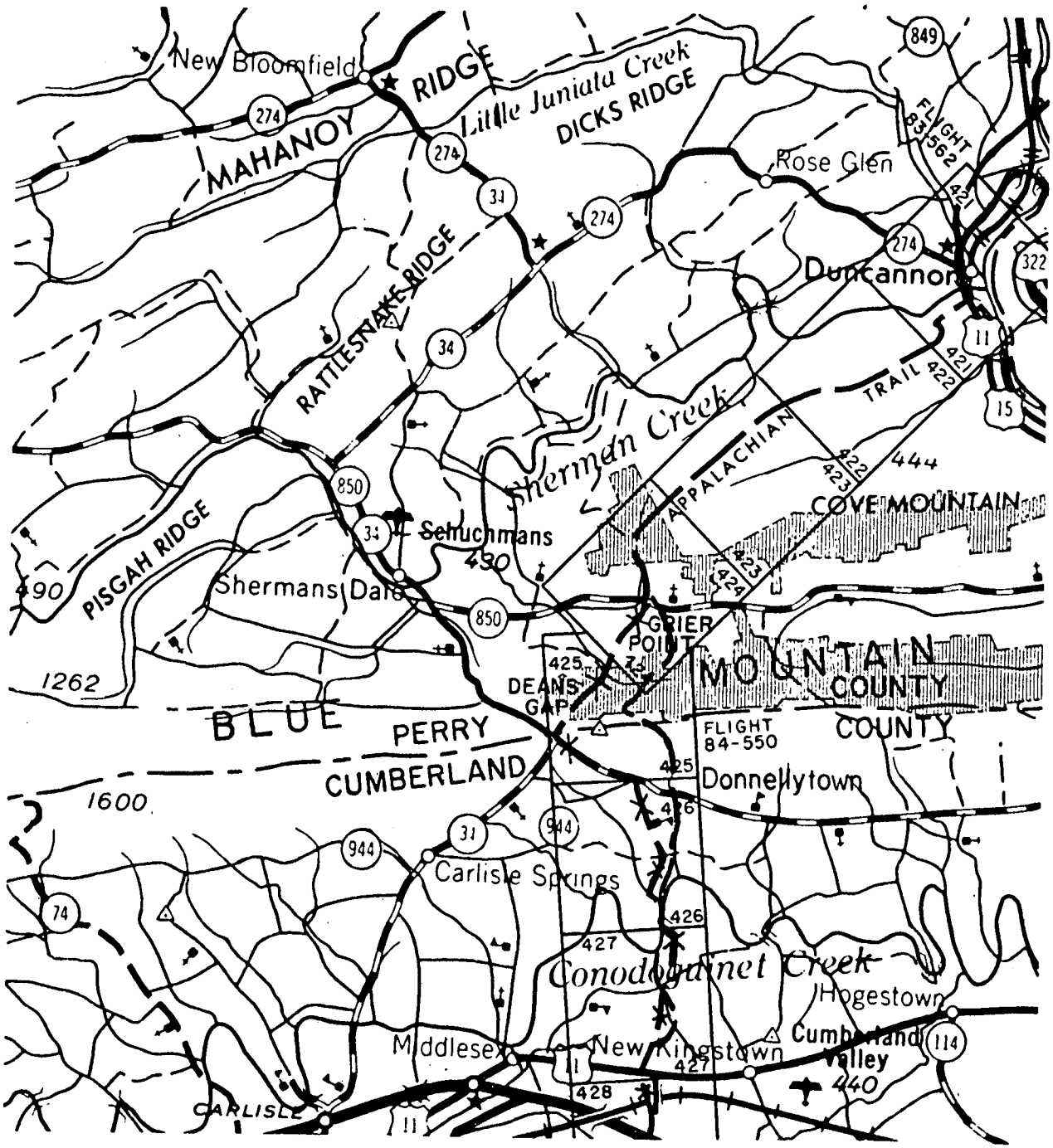

N

Pennsylvania
APPALACHIAN TRAIL

SCALE:
1 1/2 0 1 2 3 MILES

MAP NO. 44

DETAIL MAP REFERENCE 88/89

PRIVATE

FEDERAL

STATE

TRAIL

ABANDONED TRAIL

[FR Doc. 86-15365 Filed 7-8-86; 8:45 am]

BILLING CODE 4310-70-C

Prospective Concessioner Applications

The Secretary of the Interior, through the Director of the National Park Service, is authorized by Pub. L. 89-249 (79 Stat. 969; 16 U.S.C. 20), the Concessions Policy Act, to enter into concession contracts and permits without advertising and without securing competitive bids. It is a policy of the National Park Service to issue a prospectus to invite offers from those persons or corporations who may be interested and qualified to provide new facilities and services for the public under a concession contract or permit. A prospectus may also be issued when it is necessary to secure a concessioner to replace an existing unsatisfactory concessioner or to replace an existing concessioner who no longer wishes to operate. The National Park Service, therefore, is from time to time looking for concessioners who are not only compatible with the special mission and goals of the Service, but who also possess managerial competence in the type of operation at hand, and the financial strength and ability to provide needed services.

The National Park Service is vitally interested in increasing the participation of qualified potential concessioners from all sectors of society (i.e., minority and special populations, private persons and corporate businesses) to acquire, provide, operate and maintain accommodations, facilities and services for the visiting public to National Park System Areas located throughout the United States.

In order to determine the degree of interest in Concession opportunities, the National Park Service is hereby requesting that all interested parties submit their names and addresses to: Department of the Interior, National Park Service, Concessions Division—680, Attn: William H. Wood, P.O. Box 37127, Washington, D.C. 30013-7127, Phone: (202) 343-1558.

At that time a Prospective Concessioner Application will be sent to each respondent. After the application has been filled out and returned, all names will then be placed on a master mailing list for any applicable concession opportunities that may become available.

Dated: June 30, 1986.

William Penn Mott, Jr.,

Director, National Park Service.

[FR Doc. 86-15401 Filed 7-8-86; 8:45 am]

BILLING CODE 4310-70-M

INTERNATIONAL TRADE COMMISSION

[Investigation No. 337-TA-143]

Amorphous Metal Alloys and Amorphous Metal Articles

Notice is hereby given that a hearing in this matter will commence at 9:00 a.m. on July 21, 1986, in Hearing Room 6311 at the Interstate Commerce Commission Building at 12th Street and Constitution Avenue, NW, Washington, DC.

The Secretary shall publish this notice is the **Federal Register.**

Issued: June 27, 1986.

Janet D. Saxon,

Administrative Law Judge.

[FR Doc. 86-15446 Filed 7-8-86; 8:45 am]

BILLING CODE 7020-02-M

[Investigation No. 731-TA-286 (Final)]

Anhydrous Sodium Metasilicate From the United Kingdom

AGENCY: United States International Trade Commission.

ACTION: Termination of investigation.

SUMMARY: On June 25, 1986, the Commission received notice from the U.S. Department of Commerce that, having received a letter from petitioner in the subject investigation (PQ Corp.) withdrawing its petition, Commerce was terminating its antidumping investigation on anhydrous sodium metasilicate from the United Kingdom. Accordingly, pursuant to § 207.40(a) of the Commission's Rules of Practice and Procedure (19 CFR 207.40(a)), the Commission has terminated its investigation.

EFFECTIVE DATE: June 25, 1986.

FOR FURTHER INFORMATION CONTACT: Brian Walters (202-523-0104), Office of Investigations, U.S. International Trade Commission, 701 E Street NW., Washington, DC 20436. Hearing-impaired individuals are advised that information on this matter can be obtained by contacting the Commission's TDD terminal on 202-724-0002.

Authority: This investigation is being terminated under authority of the Tariff Act of 1930, title VII. This notice is published pursuant to § 207.40 of the Commission's rules (19 CFR 207.40).

By order of the Commission.

Issued: July 1, 1986.

Kenneth R. Mason,

Secretary.

[FR Doc. 86-15447 Filed 7-8-86; 8:45 am]

BILLING CODE 7020-02-M

[Investigation No. 337-TA-251]

Electronic Chromatogram Analyzers and Components Thereof; Investigation

AGENCY: U.S International Trade Commission.

ACTION: Institution of investigation pursuant to 19 U.S.C. section 1337.

SUMMARY: Notice is hereby given that a complaint was filed with the U.S. International Trade Commission on June 4, 1986, pursuant to section 337 of the Tariff Act of 1930 (19 U.S.C. section 1337), on behalf of Bioscan, Inc., 4590 MacArthur Boulevard, NW., Washington, DC 20007. The complaint alleges unfair methods of competition and unfair acts in the importation of certain electronic chromatogram analyzers and components thereof into the United States, and in their sale, by reason of alleged direct, contributory, and induced infringement of claims 5, 8, and 9 of U.S. Letters Patent 4,019,057. The complaint further alleges that the effect or tendency of the unfair methods of competition and unfair acts is to destroy or substantially injure an industry, efficiently and economically operated, in the United States.

The complainant requests that the Commission institute an investigation and, after a full investigation, issue a permanent exclusion order and permanent cease and desist orders.

FOR FURTHER INFORMATION CONTACT: Jeffrey L. Gertler, Esq., or Ethel L. Morgan, Esq., Office of Unfair Import Investigations, U.S. International Trade Commission, telephone 202-523-0115 and 202-523-0113, respectively.

Authority: The authority for institution of this investigation is contained in section 337 of the Tariff Act of 1930 and in § 210.12 of the Commission's Rules of Practice and Procedure (19 CFR 210.12).

Scope of Investigation

Having considered the complaint, the U.S. International Trade Commission, on July 2, 1986, ordered that—

(1) Pursuant to subsection (b) of section 337 of the Tariff Act of 1930, an investigation be instituted to determine whether there is a violation of subsection (a) of section 337 in the unlawful importation of certain electronic chromatogram analyzers and components thereof into the United States, or in their sale, by reason of alleged direct, contributory, and induced infringement of claims 5, 8, and 9 of U.S. Letters Patent 4,019,057, the effect or tendency of which is to destroy or substantially injure an industry,

efficiently and economically operated, in the United States;

(2) For the purpose of the investigation so instituted, the following are hereby named as parties upon which this notice of investigation shall be served:

(a) The complainant is—Bioscan, Inc., 4590 MacArthur Boulevard, NW., Washington, DC 20007.

(b) The respondents are the following companies, alleged to be in violation of section 337, and are the parties upon which the complaint is to be served:

Isomess, Isotopenmessgerate GmbH, Hauffstr. 9, 7541 Straubenhardt 1, Federal Republic of Germany
Aloka, Co., 22-1, 6-Chome, Mure, Mitakashi, Tokyo 181 Japan
Radiomatic Instrument is & Chemical Co., Inc., 5102 S. Westshore Boulevard, Tampa, Florida 33611
IN/US Service Corporation, 1275 Bloomfield Avenue, Fairfield, New Jersey 07006.

(c) Jeffrey L. Gertler, Esq., and Ethel L. Morgan, Esq., Ofice of Unfair Import Investigations, U.S. International Trade Commission, 701 E Street, NW., Room 125, Washington, DC 20436, shall be the Commission investigative attorneys, party to this investigation;

(3) For the investigation so instituted, Janet D. Saxon, Chief Administrative Law Judge, U.S. International Trade Commission, shall designate the presiding administrative law judge; and

(4) The following entities are not named as respondents in this investigation but shall be served with a copy of the notice of investigation, the complaint, and § 210.26 of the Commission's Rules:

RadioAnalytic, 5102 S. Westshore Boulevard, Tampa, Florida 33611
TM Analytic 1842 Brummel Drive, Elk Grove Village, Illinois 60007

Responses must be submitted by the named respondents in accordance with § 210.21 of the Commission's Rules of Practice and Procedure (19 CFR 210.21). Pursuant to § 210.16(d) and 210.21(a) of the rules (19 CFR 201.16(d) and 210.21(a)), such responses will be considered by the Commission if received not later than 20 days after the date of service of the complaint. Extensions of time for submitting a response will not be granted unless good cause therefor is shown.

Failure of a respondent to file a timely response to each allegation in the complaint and in this notice may be deemed to constitute a waiver of the right to appear and contest the allegations of the complaint and this notice, and to authorize the administrative law judge and the Commission, without further notice and to the respondent, to find the facts to be as alleged in the complaint and this notice to enter both and initial determination and a final determination containing such findings.

The complaint, except for any confidential information contained therein, is available for inspection during official business hours (8:45 a.m. to 5:15 p.m.) in th Office of the Secretary, U.S. International Trade Commission, 701 E Street, NW., Room 156, Washington, DC 20436, telephone 202-523-0471. Hearing-impaired individuals are advised that information on this matter can be obtained by contacting the Commission's TDD terminal on 202-724-0002.

By order of the Commission.

Issued: July 3, 1986.

Kenneth R. Mason,

Secretary.

[FR Doc. 86-15448 Filed 7-8-86; 8:45 am]

BILLING CODE 7020-02-M

[Investigation No. 337-TA-225]

In the Matter of Multi-level Touch Control Lighting Switches; Commission Decision To Review Initial Determination and Schedule of Filing of Written Submissions on Violation and on Relief, the Public Interest, and Bonding; Notice of More Complicated Designation and Extension of Deadline for Completion of Investigation

AGENCY: U.S. International Trade Commission.

ACTION: Notice is hereby given that the Commission has determined to review portions of the presiding administrative law judge's (ALJ's) initial determination (ID) finding certain respondents in violation and certain other respondents not in violation of section 337 of the Tariff Act of 1930 in the above-captioned investigation. The Commission has also determined the investigation to be "more complicated" and has extended the deadline for completion of the investigation by 28 days.

Authority: The authority for the Commission's disposition of this matter is contained in section 337 of the Tariff Act of 1930 (19 U.S.C. section 1337) and in §§ 210.53 -.56 of the Commission's Rules of Practice and Procedure (19 CFR §§ 210.53 -.56 and 210.59).

FOR FURTHER INFORMATION CONTACT: John C. Kingery, Esq., Office of the General Counsel, U.S. International Trade Commission, telephone 202-523-1638.

SUMMARY: On May 14, 1986, the ALJ issued an ID finding certain respondents in violation of section 337 and other respondents not in violation of section 337 in the importation or sale of certain multi-level touch control lighting switches. Complainant and the Commission investigative attorney filed petitions for review of certain parts of the ID pursuant to § 210.54(a) of the Commission rules. No responses to these petitions were filed and no comments were received from other Government agencies.

Having reviewed the record, including the petitions for review, the Commission has determined that the following issues warrant review:

(1) Whether U.S. Letters Patent 3,715,623 (the '623 patent) is invalid, in whole or in part, for lack of enablement or because of indefiniteness of claims 1-4, 6, and 8-10;

(2) Whether respondents' devices infringe any claim of the '623 patent, including, but not limited to: (a) Whether devices with "synchronous counters" are covered by the "cascade connected bistables" element of claim 1 of the '623 patent; and (b) whether the "decoders" of respondents' devices are covered by the '623 patent either literally or under the doctrine of equivalents?);

(3) Which companies are properly considered part of the domestic industry; and

(4) Whether the alleged unfair acts of respondents have the effect or tendency of substantially injuring the relevant domestic industry.

No other issues will be reviewed.

SUPPLEMENTARY INFORMATION: If the Commission finds that a violation of section 337 has occurred, it may issue an order that could result in the exclusion of the subject articles from entry into the United States, and/or temporary cease and desist orders that could result in one or more respondents being required to cease and desist from engaging in unfair acts in the importation and sale of such articles. Accordingly, the Commission is interested in receiving written submissions addressing the form of relief, if any, that should be ordered.

If the Commission concludes that a violation of section 337 has occurred and contemplates that some form of relief is appropriate, it must consider the effect that the relief would have upon the public health and welfare, competitive conditions in the U.S. economy the U.S. production of articles which are like or directly competitive with those that are subject to investigation, and U.S. consumers. The Commission is, therefore, interested in receiving written submissions

concerning the effect, if any, that granting a remedy would have on the public interest.

If the Commission finds that a violation of section 337 has occurred and orders permanent relief, the President has 60 days to approve or disapprove the Commission's action. During this period, the subject articles would be entitled to enter the United States under a bond in an amount determined by the Commission and prescribed by the Secretary of the Treasury. The Commission is, therefore, interested in receiving written submissions concerning the amount of bond that should be imposed.

Written Submissions

The parties to the investigation and interested Government agencies are encouraged to file written submissions on the issues under review, and on the issues of remedy, the public interest, and bonding. Complainant and the Commission investigative attorney are also requested to submit a proposed remedial order or orders for the Commission's consideration. Persons other than the parties and government agencies may file written submissions addressing the issues of remedy, the public interest, and bonding.

Written submissions on the issues under review and on remedy, the public interest, and bonding must be filed not later than the close of business on July 14, 1986. Reply submissions on the issues under review and on remedy, the public interest, and bonding must be filed not later than July 21, 1986.

Extension of Deadline for Completion of Investigation

The original deadline for completion of this investigation was August 14, 1986. However, because of the extent of the review undertaken and the relatively short time until the deadline, the Commission has determined, under section 337(b)(1) and § 210.59 of the Commission's Rules of Practice and Procedure, to designate this investigation more complicated and extend the deadline for completion of the investigation by 28 days, that is, until September 11, 1986.

Commission Hearing

The Commission does not plan to hold a public hearing in connection with the final disposition of this investigation.

Additional Information

Persons submitting written submissions must file the original document and 14 true copies thereof with the Office of the Secretary on or before the deadlines stated above. Any persons desiring to submit a document (or portion thereof) to the Commission in confidence must request confidential treatment unless the information has already been granted such treatment by the ALJ. All such requests should be directed to the Secretary and must include a full statement of the reasons why the Commission should grant confidential treatment. Documents containing confidential information approved by the Commission for confidential treatment will be treated accordingly. All nonconfidential written submissions will be available for public inspection at the Office of the Secretary.

Copies of the ALJ's ID and all other nonconfidential documents filed in connection with this investigation are available for inspection during official business hours (8:45 a.m. to 5:15 p.m.) in the Office of the Secretary, U.S. International Trade Commission, 701 E Street NW., Washington, DC 20436, telephone 202-523-0161.

Hearing-impaired individuals are advised that information on this matter can be obtained by contacting the Commission's TDD terminal on 202—724-0002.

By order of the Commission.

Issued: June 30, 1986.

Kenneth R. Mason,

Secretary

[FR Doc. 86-15449 Filed 7-8-86; 8:45 am]

BILLING CODE 7020-02-M

[Investigation No. 701-TA-271 (Final)]

Oil Country Tubular Goods From Israel

AGENCY: United States International Trade Commission.

ACTION: Institution of a final countervailing duty investigation.

SUMMARY: The Commission hereby gives notice of the institution of final countervailing duty investigation No. 701-TA-271 (Final) under section 705(b) of the Tariff Act of 1930 (19 U.S.C. Section 1671d(b)) to determine whether an industry in the United States is materially injured, or is threatened with material injury, or the establishment of an industry in the United States is materially retarded, by reason of imports from Israel of oil country tubular goods,[1] provided for in items 610.32, 610.37, 610.39, 610.40, 610.42, 610.43, 610.49, and 610.52 of the Tariff Schedules of the United States, which have been found by the Department of Commerce, in a preliminary determination, to be subsidized by the Government of Israel. The Commission will make its final injury determination within forty-five days after notification of Commerce's final determination (see sections 705(a) and 705(b) of the Act (19 U.S.C. Sections 1671d(a) and 1671(b))).

For further information concerning the conduct of this investigation, hearing procedures, and rules of general application, consult the Commission's Rules of Practice and Procedure, Part 207, Subparts A and C (19 CFR Part 207), and Part 201, subparts A through E (19 CFR Part 201).

EFFECTIVE DATE: June 11, 1986.

FOR FURTHER INFORMATION CONTACT: Rebecca Woodings (202-523-0282), Office of Investigations, U.S. International Trade Commission, 701 E Street NW., Washington, DC 20436. Hearing-impaired individuals are advised that information on this matter can be obtained by contacting the Commission's TDD terminal on 202-724-002.

SUPPLEMENTARY INFORMATION:

Background

This investigation is being instituted as a result of an affirmative preliminary determination by the Department of Commerce that certain benefits which constitute subsidies within the meaning of section 701 of the act (19 U.S.C. section 1671) are being provided to manufacturers, producers, or exporters in Israel of oil country tubular goods. The investigation was requested in a petition filed on March 12, 1986, by the Lone Star Steel Company, Dallas, TX and CF&I Steel Corporation, Pueblo, CO. In response to that petition the Commission conducted a preliminary countervailing duty investigation and, on the basis of information developed during the course of that investigation, determined that there was a reasonable indication that an industry in the United States was materially injured by reason of imports of the subject merchandise (51 FR 16907, May 7, 1986).

Participation in the Investigation

Persons wishing to participate in this investigation as parties must file an entry of appearance with the Secretary to the Commission, as provided in § 201.11 of the Commission's rules (19 CFR 201.11), not later than twenty-one (21) days after the publication of this notice in the **Federal Register**. Any entry

[1] For purposes of this investigation, "oil country tubular goods" includes drill pipe, casing, and tubing for drilling oil and gas wells, of carbon or alloy steel, whether such articles are welded or seamless, whether finished or unfinished, and whether or not meeting American Petroleum Institute (API) specifications.

of appearance filed after this date will be referred to the Chairman, who will determine whether to accept the late entry for good cause shown by the person desiring to file the entry.

Service List

Pursuant to § 201.11(d) of the Commission's rules (19 CFR 201.11(d)), the Secretary will prepare a service list containing the names and addresses of all persons, or their representatives, who are parties to this investigation upon the expiration of the period for filing entries of appearance. In accordance with §§ 201.16(c) and 207.3 of the rules (19 CFR 201.16(c) and 207.3), each document filed by a party to the investigation must be served on all other parties to the investigation (as identified by the service list), and a certificate of service must accompany the document. The Secretary will not accept a document for filing without a certificate of service.

Hearing, Staff Report, and Written Submissions

The Commission will hold a hearing in connection with this investigation at the U.S. International Trade Commission Building, 701 E Street NW., Washington, DC; the time and date of the hearing will be announced at a later date. A public version of the prehearing staff report in this investigation will be placed on the public record prior to the hearing, pursuant to § 207.21 of the Commission's rules (19 CFR 207.21). The dates for filing prehearing and posthearing briefs and the date for filing other written submissions will also be announced at a later date.

Authority: This investigation is being conducted under authority of the Tariff Act of 1930, title VII. This notice is published pursuant to § 207.20 of the Commission's rules (19 CFR 207.20).

By order of the Commission.

Issued: June 30, 1986.

Kenneth R. Mason,

Secretary.

[FR Doc. 86-15450 Filed 7-8-86; 8:45 am]

BILLING CODE 7020-02-M

[Investigations Nos. 701-TA-279 (Preliminary) and 731-TA-336 (Preliminary)]

Porcelain-on-Steel Cooking Ware From Spain

AGENCY: United States International Trade Commission.

ACTION: Institution of preliminary countervailing duty and antidumping investigations and scheduling of a conference to be held in connection with these investigations.

SUMMARY: The Commission hereby gives notice of the institution of a preliminary countervailing duty investigation No. 701-TA-279 (Preliminary) under section 703(a) of the Tariff Act of 1930 (19 U.S.C. section 1671b(a)) to determine whether there is a reasonable indication that an industry in the United States is materially injured, or is threatened with material injury, or the establishment of an industry in the United States is materially retarded, by reason of imports from Spain of cooking ware of steel, enameled or glazed with vitreous glasses (porcelain), not having self-contained electric heating elements, and teakettles of steel, enameled or glazed with vitreous glasses, all the foregoing, provided for in item 654.08 of the Tariff Schedules of the United States, except kitchen ware (currently reported under item 654.0828 of the Tariff Schedules of the United States Annotated), which are alleged to be subsidized by the Government of Spain. As provided in section 703(a), the Commission must complete preliminary countervailing duty investigations in 45 days, or in this case by August 14, 1986.

The Commission also gives notice of the institution of a preliminary antidumping investigation No. 731-TA-336 (Preliminary) under section 733(a) of the Tariff Act of 1930 (19 U.S.C. section 1673b(a)) to determine whether there is a reasonable indication that an industry in the United States is materially injured, or is threatened with material injury, or the establishment of an industry in the United States is materially retarded, by reason of imports from Spain of cooking ware of steel, enameled or glazed with vitreous glasses (porcelain), not having self-contained electric heating elements, and teakettles of steel, enameled or glazed with vitreous glasses, all the foregoing, provided for in item 654.08 of the Tariff Schedules of the United States, except kitchen ware (currently reported under item 654.0828 of the Tariff Schedules of the United States Annotated), provided for in item 654.08 of the Tariff Schedules of the United States, which are alleged to be sold in the United States at less than fair value. As provided in section 733(a), the Commission must complete preliminary countervailing duty investigations in 45 days, or in this case by August 14, 1986.

For further information concerning the conduct of these investigations and rules of general application, consult the Commission's Rules of Practice and Procedure, Part 207, Subparts A and B (19 CFR Part 207), and Part 201, subparts A through E (19 CFR Part 201).

EFFECTIVE DATE: June 30, 1986.

FOR FURTHER INFORMATION CONTACT: Maria Papadakis (202-523-0439), Office of Investigations, U.S. International Trade Commission, 701 E Street NW., Washington, DC 20436. Hearing-impaired individuals are advised that information on this matter can be obtained by contacting the Commission's TDD terminal on 202-724-0002.

SUPPLEMENTARY INFORMATION:

Background

These investigations are being instituted in response to a petition filed on June 30, 1986 on behalf of the Porcelain-On-Steel Committee of the Cookware Manufacturers Association, Walworth, WI, and General Housewares Corp., Terre Haute, IN.

Participation in the Investigations

Persons wishing to participate in the investigations as parties must file an entry of appearance with the Secretary to the Commission, as provided in § 201.11 of the Commission's rules (19 CFR 201.11), not later than seven (7) days after publication of this notice in the **Federal Register**. Any entry of appearance filed after this date will be referred to the Chairman, who will determine whether to accept the late entry for good cause shown by the person desiring to file the entry.

Service List

Pursuant to § 201.11(d) of the Commission's rules (19 CFR 201.11(d)), the Secretary will prepare a service list containing the names and addresses of all persons, or their representatives, who are parties to these investigations upon the expiration of the period for filing entries of appearance. In accordance with §§ 201.16(c) and 207.3 of the rules (19 CFR 201.16(c) and 207.3), each document filed by a party to the investigations must be served on all other parties to the investigations (as identified by the service list), and a certificate of service must accompany the document. The Secretary will not accept a document for filing without a certificate of service.

Conference

The Commission's Director of Operations has scheduled a conference in connection with these investigations for 9:30 a.m. on July 22, 1986 at the U.S. International Trade Commission Building, 701 E Street NW., Washington, DC. Parties wishing to participate in the conference should contact Maria Papadakis (202-523-0439) not later than July 18, 1986 to arrange for their appearance. Parties in support of the

imposition of countervailing duties and/or antidumping duties in these investigations and parties in opposition to the imposition of such duties will each be collectively allocated one hour within which to make an oral presentation at the conference.

Written Submissions

Any person may submit to the Commission on or before July 24, 1986 a written statement of information pertinent to the subject of the investigations, as provided in § 207.15 of the Commission's rules (19 CFR 207.15). A signed original and fourteen (14) copies of each submission must be filed with the Secretary to the Commission in accordance with § 201.8 of the rules (19 CFR 201.8). All written submissions except for confidential business data will be available for public inspection during regular business hours (8:45 a.m. to 5:15 p.m.) in the Office of the Secretary to the Commission.

Any business information for which confidential treatment is desired must be submitted separately. The envelope and all pages of such submissions must be clearly labeled "Confidential Business Information." Confidential submissions and requests for confidential treatment must conform with the requirements of section 201.6 of the Commission's rules (19 CFR 201.6).

Authority: These investigations are being conducted under authority of the Tariff Act of 1930, title VII. This notice is published pursuant to § 207.12 of the Commission's rules (19 CFR 207.12).

By order of the Commission.

Issued: July 3, 1986.

Kenneth R. Mason,

Secretary.

[FR Doc. 86-15451 Filed 7-8-86; 8:45 am]

BILLING CODE 7020-02-M

[Investigation No. 337-TA-241]

Prefabricated Bow Forms; Commission Decision Not To Review Initial Determination Terminating Respondent on the Basis of a Settlement Agreement

AGENCY: U.S International Trade Commission.

ACTION: Nonreview of an initial determination (ID) terminating respondent McGinely Mills, Inc. (McGinley), on the basis of a settlement agreement.

SUMMARY: The U.S. International Trade Commission has determined not to review an ID (Order No. 8) terminating respondent McGinley in the above-captioned investigation on the basis of a settlement agreement.

FOR FURTHER INFORMATION CONTACT: Marcia H. Sundeen, Esq., Office of the General Counsel, U.S. International Trade Commission, telephone 202-523-0480.

SUPPLEMENTARY INFORMATION: On April 22, 1986, complainant Minnesota Mining & Manufacturing Co. and respondent McGinley filed a joint motion to terminate on the basis of a settlement agreement (Motion No. 241-3). On June 3, 1986, the presiding administrative law judge issued an ID granting the joint motion to terminate respondent McGinley.

This action is taken under the authority of section 337 of the Tariff Act of 1930 (19 U.S.C. section 1337) and Commission rule § 210.53 (19 CFR 210.53). Notice of the ID was published in the **Federal Register** of June 11, 1986 (51 FR 21,257). No petitions for review were filed nor were any comments received from other Government agencies or the public.

Copies of the nonconfidential version of the ID and all other nonconfidential documents filed in connection with this investigation are available for inspection during official business hours (8:45 a.m. to 5:15 p.m.) in the Office of the Secretary, U.S. International Trade Commission, 701 E Street NW., Washington, DC 20436, telephone 202-523-0161. Hearing-impaired individuals are advised that information on this matter can be obtained by contacting the Commission's TDD terminal on 202-724-0002.

By order of the Commission.

Issued: June 30, 1986.

Kenneth R. Mason,

Secretary.

[FR Doc. 86-15452 Filed 7-8-86; 8:45 am]

BILLING CODE 7020-02-M

[Investigation No. 337-TA-231]

Soft-Sculpture Dolls Popularly Known as Cabbage Patch Kids, Related Literature, and Packaging; Commission Decision Not to Review Initial Determination Terminating Investigation as to Respondent Calila, Inc. on the Basis of a Settlement Agreement

AGENCY: U.S. International Trade Commission.

ACTION: Termination of investigation as to a respondent on the basis of a settlement agreement.

SUMMARY: Notice is hereby given that the U.S. International Trade Commission has determined not to review an initial determination (ID) (Order No. 19) granting a motion to terminate the investigation as to respondent Calila, Inc. (Calila) on the basis of a settlement agreement.

FOR FURTHER INFORMATION CONTACT: Stephen A. McLaughlin, Esq., Office of the General Counsel, U.S. International Trade Commission, telephone 202-523-0421.

SUPPLEMENTARY INFORMATION: On October 1, 1985, Original Appalachian Artworks, Inc. (OAA), and Coleco Industries, Inc., filed a complaint pursuant to section 337 of the Tariff Act of 1930 (19 U.S.C. section 1337) with the Commission alleging unfair methods of competition and unfair acts in the importation and sale of certain Cabbage Patch Kids dolls, together with the related literature and packaging. The unfair acts alleged were infringement of OAA's copyrights, failure to mark country of origin, and violation of 17 U.S.C. section 601(a). On May 14, 1986, complainants OAA and Coleco moved to terminate the investigation as to Calila, Inc. (Calila) pursuant to rule 210.51 on the basis of a settlement agreement. The motion was supported by the Commission investigative attorney. On June 2, 1986, the presiding administrative law judge issued an ID granting the motion and terminating the investigation as to Calila on the basis of the settlement agreement. No petitions for review or comments from the public or Government agencies concerning the ID were received.

This action is taken under the authority of section 337 of the Tariff Act of 1930 and Commission rule 210.53 (19 CFR 210.53).

Copies of the ID and all other nonconfidential documents filed in connection with this investigation are available for inspection during official business hours (8:45 a.m. to 5:15 p.m.) in the Office of the Secretary, U.S. International Trade Commission, 701 E Street NW., Washington, DC 20436, telephone 202-523-0161. Hearing-impaired persons are advised that information on this matter can be obtained by contacting the Commission's TDD terminal on 202-724-0002.

By order of the Commission.

Issued: June 30, 1986.

Kenneth R. Mason,

Secretary.

[FR Doc. 86-15453 Filed 7-8-86; 8:45 am]

BILLING CODE 7020-02-M

Agency Form Submitted for OMB Review

AGENCY: United States International Trade Commission.

ACTION: In accordance with the provisions of the Paperwork Reduction Act of 1980 (44 U.S.C. Chapter 35), the Commission has submitted a proposal for the collection of information to the Office of Management and Budget (OMB) for review.

Purpose of Information Collection

The proposed information collection is for use by the Commission in connection with investigation No. 332-167, Quarterly and Annual Surveys on Certain Stainless Steel and Alloy Tool Steel Products, instituted under the authority of section 332 of the Tariff Act of 1930 (19 U.S.C. 1332).

Summary of Proposal

(1) Number of forms submitted: three.

(2) Title of forms: Certain Stainless Steel and Alloy Tool Steel. (Quarterly)—Questionnaires for U.S. Producers and Importers; Certain Stainless Steel and Alloy Tool Steel (Annual)—Questionnaires for U.S. Producers.

(3) Type of request: extension of the expiration date of a currently approved collection.

(4) Frequency of use: quarterly and annually.

(5) Description of respondents: firms which produce or import certain stainless steel and allow tool steel products.

(6) Estimated number of respondents: 54.

(7) Estimated total number of hours to complete the forms: 3,824.

(8) Information obtained from the form that qualifies as confidential business information will be so treated by the Commission and not disclosed in a manner that would reveal the individual operations of a firm.

Additional Information or Comment

Copies of the proposed forms and supporting documents may be obtained from Nancy Fulcher, (USITC tel. no. 202-523-0341). Comments about the proposal should be directed to the Office of Information and Regulatory Affairs, Office of Management and Budget, New Executive Office Building, Washington, DC 20503, Attention: Francine Picoult, Desk Officer for U.S. International Trade Commission. Any comments should be specific, indicating which part of the questionnaire or study plan is objectionable, describing the problem in detail, and including specific suggested revisions or language changes.

Submission of Comments

Comments should be submitted to OMB within 2 weeks of the date this notice appears in the **Federal Register**. If you are unable to submit them promptly you should advise OMB within the two week period of your intent to comment on the proposal. Ms. Picoult's telephone number is 202-395-7231. Copies of any comments should be provided to Charles Ervin (United States International Trade Commission, 701 E Street NW., Washington, DC 20436).

Hearing impaired individuals are advised that information on this matter can be obtained by contacting our TDD terminal on (202) 724-0002.

Issued: June 30, 1986.

By order of the Commission.

Kenneth R. Mason,

Secretary.

[FR Doc. 86-15445 Filed 7-8-86; 8:45 am]

BILLING CODE 7020-02-M

[Investigation No. 337-TA-250]

Investigation of Certain Ventilated Motorcycle Helmets; Bell Helmets, Inc.

AGENCY: U.S. International Trade Commission.

ACTION: Institution of investigation pursuant to 19 U.S.C. 1337.

SUMMARY: Notice is hereby given that a complaint was filed with the U.S. International Trade Commission on May 28, 1986, pursuant to section 337 of the Tariff Act of 1930 (19 U.S.C. 1337), on behalf of Bell Helmets, Inc., 15301 Shoemaker Avenue, Norwalk, California 90650. A supplement to the complaint was filed on June 12, 1986. The complaint as supplemented alleges unfair methods of competition and unfair acts in the importation of certain ventilated motorcycle helmets into the United States, and in their sale, by reason of alleged (1) infringement of the claims of U.S. Letters Patent 4,054,953; and (2) infringement of the claims of U.S. Letters Patent 4,555,816. The complaint further alleges that the effect or tendency of the unfair methods of competition and unfair acts is to destroy or substantially injure an industry, efficiently and economically operated, in the United States.

The complainant requests that the Commission institute an investigation and, after a full investigation, issue a permanent exclusion order and permanent cease and desist orders.

FOR FURTHER INFORMATION CONTACT: Arthur Wineburg, Esq., or Steven H. Schwartz, Esq., Office of Unfair Import Investigations, U.S. International Trade Commission, telephone 202-523-3019 and 202-523-4877.

Authority: The authority for institution of this investigation is contained in section 337 of the Tariff Act of 1930 and in § 210.12 of the Commission's Rules of Practice and Procedure (19 CFR 210.12).

Scope of Investigation

Having considered the complaint, the U.S. International Trade Commission, on June 26, 1986, ordered that—

(1) Pursuant to subsection (b) of section 337 of the Tariff Act of 1930, an investigation be instituted to determine whether there is a violation of subsection (a) of section 337 in the unlawful importation of certain ventilated motorcycle helmets into the United States, or in their sale, by reason of alleged (1) infringement of claim 1 of U.S. Letters Patent 4,054,953; and (2) infringement of claim 1 of U.S. Letters Patent 4,555,816, the effect or tendency of which is to destroy or substantially injure an industry, efficiently and economically operated, in the United States;

(2) For the purpose of the investigation so instituted, the following are hereby named as parties upon which this notice of investigation shall be served:

(a) The complainant is—

Bell Helmets, Inc., 15301 Shoemaker Avenue, Norwalk, California 90650.

(b) The respondents are the following companies, alleged to be in violation of section 337, and are the parties upon which the complaint is to be served:

Shoei Kako Company, Ltd., 9-2, 2 chome, Shimbashi, Minato-ku, Tokyo 105, Japan

Arai Helmet, Ltd., 12 Azuma-cho, 2 chome, Ohmiya, Saitama, Japan 330

Marushin Kogyo Company, Ltd., 5-9-6, Yotsugi, Katsushikaku, Tokyo, Japan 124

Shoei Safety Helmet Corp., 2228 Cotner Avenue, Los Angeles, California 90064

Arai Helmets, P.O. Box 421, Tenafly, New Jersey 07670

Hoppe & Associates, 407 Howell Way, Edmonds, Washington 98020.

(c) Arthur Wineburg, Esq., and Steven H. Schwartz, Esq., Office of Unfair Import Investigations, U.S. International Trade Commission, 701 E Street NW., Room 134 and Room 124, respectively, Washington, DC 20436, shall be the Commission investigative attorneys, party to this investigation; and

(3) For the investigation so instituted, Janet D. Saxon, Chief Administrative Law Judge, U.S. International Trade Commission, shall designate the presiding administrative law judge.

Responses must be submitted by the named respondents in accordance with § 210.21 of the Commission's rules of practice and procedure (19 CFR 210.21). Pursuant to § 201.16(d) and 210.21(a) of the rules (29 CFR 201.16(d) and 210.21(a)), such responses will be considered by the Commission if received not later than 20 days after the date of service of the complaint. Extensions of time for submitting a response will not be granted unless good cause therefor is shown.

Failure of a respondent to file a timely response to each allegation in the complaint and in this notice may be deemed to constitute a waiver of the right to appear and contest the allegations of the complaint and this notice, and to authorize the administrative law judge and the Commission, without further notice to the respondent, to find the facts to be alleged in the complaint and this notice and to enter both an initial determination and a final determination containing such findings.

The complaint, except for any confidential information contained therein, is available for inspection during official business hours (8:45 a.m. to 5:15 p.m.) in the Office of the Secretary, U.S. International Trade Commission, 701 E Street NW., Room 156, Washington, DC 20436, telephone 202-523-0471. Hearing-impaired individuals are advised that information on this matter can be obtained by contacting the Commission's TDD terminal on 202-724-0002.

Issued: June 30, 1986.

By order of the Commission.

Kenneth R. Mason,

Secretary.

[FR Doc. 86-15454 Filed 7-8-86; 8:45 am]

BILLING CODE 7020-02-M

DEPARTMENT OF JUSTICE

Joint Newspaper Operating Agreement; Detroit Free Press and the Detroit News

Notice is hereby given that the Attorney General has extended the period for public comment on the application for a Joint Operating Agreement between the Detroit Free Press and the Detroit News filed pursuant to the Newspaper Preservation Act, 15 U.S.C. 1801 et seq. Notice of the proposed agreement inviting public comments was published in the **Federal Register** on May 30, 1986. The period for public comments has been extended until July 23, 1986. The period in which persons may reply in writing to the report of the Antitrust Division and to other comments is extended until August 22, 1986. Comments should be filed by mailing or delivering five copies to the Assistant Attorney General for Administration, Justice Management Division, Department of Justice, Washington, DC 20530.

Dated: July 3, 1986.

W. Lawrence Wallace,

Assistant Attorney General for Administration.

[FR Doc. 86-15488 Filed 7-8-86; 8:45 am]

BILLING CODE 4410-01-M

DEPARTMENT OF LABOR

Employment and Training Administration

Job Training Partnership Act: Migrant and Seasonal Farmworker Programs; Notice of Allocation Formula and Allotments

AGENCY: Employment and Training Administration, Labor.

ACTION: Notice of allocation formula and allotments.

SUMMARY: The Employment and Training Administration is announcing a revised formula for allocating Job Training Partnership Act (JTPA) migrant and seasonal farmworker program funds and final allotments for that program for Program Year 1986.

EFFECTIVE DATE: July 1, 1986.

FOR FURTHER INFORMATION CONTACT: Charles C. Kane, Chief, Division of Seasonal Farmworker Programs. Telephone: (202) 376-1226.

SUPPLEMENTARY INFORMATION: On March 19, 1986, a notice was published in the **Federal Register** (51 FR 9545) announcing the revised allocation formula for Job Training Partnership Act (JTPA), section 402 (migrant and seasonal farmworker programs) grants, and the proposed State planning estimates, and including a discussion of the comments received on the Report of the Interagency Task Force on Farmworker Population Data. Interested parties were invited to submit comments on the State planning estimates and the allocation formula. The purpose of this notice is to announce that the Department of Labor has adopted the allocation formula, and to set the State planning estimates published on March 19, 1986, as the final Program Year (PY) 1986 (July 1, 1986 through June 30, 1987) allocations in the appendix to this notice. This notice is also to advise interested parties of the comments received pursuant to the March 19, 1986, notice.

Allocation Formula

The distribution is based on data obtained in the Decennial Census of the Population, 1980. This complies with section 162(a) of the JTPA which provides

> All allotments and allocations under this Act shall be based on the latest available data and estimates satisfactory to the Secretary. All data relating to economically disadvantaged and lower income persons shall be based on 1980 Census or later data.

More specifially, the allotments derive from the Census Occupational Codes which the Department of Labor considers to represent most accurately the nation's disadvantaged agricultural labor force. The persons included in the data base are individual workers who reported on the Census questionnaire that they earned an income at or below 70 percent of the Lower Living Standard Income Level set by the Bureau of Labor Statistics and who earned more than half of their income from wages (see 50 FR 24506, June 11, 1985; and 51 FR 12752, April 15, 1986).

Allotments

The allotments set forth in the appendix to this notice reflect the revised formula described above. The formula is applied to a total amount to be distributed of $55,535,000. This figure represents the enacted level of $60,357,000 reduced by a $2,595,000 sequestration effective March 1, 1986, pursuant to Pub. L. 99-177, the Balanced Budget and Emergency Deficit Control Act of 1985. In addition, $2,227,000 is being withheld for the section 402 national account, of which $1,983,861 is for migrant housing and $170,000 is for the Hope Arkansas Rest Center. The Department of Labor intends to employ a hold-harmless provision for a period of 3 years, and, thereafter, to allocate to each jurisdiction the amount it would receive by a direct application of the Census data without a hold-harmless provision.

Discussion of Comments

There were nine letter of comments received within the comment period. Several additional comments were received and considered to the extent possible. A summary of the comments/questions received and the Department of Labor's responses are provided below:

Comment/Question: Why did the Department of Labor choose to use Census Occupational Data as the bases

on which to make the funding distribution?

Response: As stated above, the Department of Labor is required to use the 1980 Census of the Population or later data in making allotments and allocations under the JTPA. The March 19, 1986, notice described alternative data sources, none of which provided, except at unjustifiable costs, data which are more current that the Census. The Department of Labor recognizes that the Census is conducted in April and that therefore it is possible that some migrants and other farmworkers are not counted as being employed in agriculture at that time, except in those States that have long growing seasons. Consequently, the April timing of the Census count could have an uneven effect on State allotments. However, the Department of Labor has no control over the timing or conduct of the Census.

Comment/Question: Why did funding reductions in many States exceed the 4.3-percent reduction resulting from the Balanced Budget and Emergency Deficit Control Act of 1985?

Response: The Balanced Budget and Emergency Deficit Control Act of 1985 affected the total appropriation for JTPA, Title IV, section 402 programs and the allotments for individual States. A larger impact on some State allotments resulted from the application of Census occupational data. A seventy-five-percent hold-harmless factor was used to lessen the impact. The overall result is that some States received more than a 4.3-percent reduction, others received less, and some States received an increase over their Program Year 1985 levels.

Comment/Question: Why was a total of $2,227,000 of JTPA, Title IV, section 402 allocable funds withheld for migrant housing programs and the Hope Arkansas Rest Center?

Response: The migrant housing program and the Hope Arkansas Rest Center are funded from the section 402 national account of $2,227,000, not from the $55,535,000 of allocable funds. The housing program is funded in accordance with the language in the House and Senate Committees on Appropriations' reports on the Department of Labor Appropriation Act, 1986. S. Rep. No. 99–151 at 12; H.R. Rep. No. 99–289 at 10; see H.R. Rep. No. 99–402 at 9.

Comment/Question: Will there be any changes in Section 402 regulations because of the changes in the formula?

Response: The Department of Labor is considering a change in defining eligibility by reference to Standard Occupational Classification (SOC) Codes as opposed to Standard Industrial Classification (SIC) Codes, as is presently the case. This change would bring the eligible population and the data base population into closer agreement.

Comment/Question: Why did the Department of Labor use a 75-percent hold-harmless as opposed to a 90-percent which has been used in prior years?

Response: The funding reduction from the PY 1985 level of $65,474,000 to the PY 1986 level of $57,762,000 constitutes more than a 10-percent cut. Therefore, an absolute 90-percent hold-harmless level was not possible. The Department of Labor believes that an orderly process of change in funding levels and services to the target population can be achieved through the use of the 75-percent level.

Comment/Question: In addition to the income level and the more than 50-percent wage requirement, are there additional restrictions for inclusion in the data base population of persons in Census Codes 473 and 474, "Farmers, Other than Horticultural", and "Farmers, Horticultural"?

Response: Persons who fall into Codes 473 and 474 must also satisfy two other requirements: (1) They must work 50–52 weeks a year, and (2) be under 62 years of age. These restrictions are intended to eliminate, to the greatest extent possible, retired persons who may engage in small-scale agricultural work to supplement retirement income, but who would not normally be applicants for employment and training services. However, these restrictions do not affect the provision of services to eligible tenant farmers, sharecroppers, and renters.

Comment/Question: The Department of Labor began using 1980 Census Occupational Data in October 1983, and continued to use the same data through Program Year 1985. Are there any changes in the Occupational Codes which will now be used to make allotments?

Response: Yes. One Occupational Code, 485, despite its title, "Supervisor Related Agricultural Occupations", was determined to be irrelevant and deleted from the data base. Also, Code 483, "Marine Life Cultivation Worker" is now included.

Comment/Question: Why did the Department of Labor not include dependents in the Data Base Population?

Response: Dependents of farmworkers are eligible for all services. However, as a practical matter, most dependents are recipients only of supportive services. Indeed, many dependents, because of extreme youth or other reasons, are not applicants for full training and employment services. As stated above for Codes 473 and 474, the Department of Labor tried to eliminate those persons who would not be applicants for training and employment services. Similarly, the Department of Labor did not wish to give the same weight to dependents (who, in practice, receive only non-training-related supportive services on which not more than 15-percent of grant funds may be spent) as the weight given to workers who normally receive the full range of training and employment services. This decision was one over which the Department of Labor deliberated at length, but which the Department believes is proper and in the best interest of the target population.

Signed at Washington, DC, this 26th day of June, 1986.

Paul A. Mayrand,

Director, Office of Special Targeted Programs.

BILLING CODE 4510-30-M

APPENDIX
U.S. DEPARTMENT OF LABOR - EMPLOYMENT AND TRAINING ADMINISTRATION
OFFICE OF FINANCIAL CONTROL AND MANAGEMENT SYSTEMS
PY 1986 MSFW ALLOTMENT TO STATES
07-01-1986

	ALLOTMENT
Alabama	774,193
Alaska	0
Arizona	1,001,566
Arkansas	1,140,959
California	7,881,007
Colorado	705,840
Connecticut	253,520
Delaware	120,000
District of Columbia	0
Florida	3,419,487
Georgia	1,515,670
Hawaii	241,161
Idaho	796,276
Illinois	1,059,592
Indiana	806,617
Iowa	1,456,693
Kansas	894,709
Kentucky	1,342,394
Louisiana	781,203
Maine	322,950
Maryland	274,928
Massachusetts	281,121
Michigan	835,651
Minnesota	1,379,565
Mississippi	1,437,736
Missouri	1,080,785
Montana	661,908
Nebraska	1,077,714
Nevada	132,732
New Hampshire	120,000
New Jersey	316,914
New Mexico	463,978
New York	1,373,941
North Carolina	2,825,698
North Dakota	646,628
Ohio	907,535
Oklahoma	599,973
Oregon	831,679
Pennsylvania	1,160,237
Rhode Island	0
South Carolina	1,049,588
South Dakota	688,665
Tennessee	941,977
Texas	4,521,771
Utah	215,105
Vermont	211,483
Virginia	947,703
Washington	1,415,186
West Virginia	215,573
Wisconsin	1,338,296
Wyoming	196,995
Puerto Rico	2,870,098
FORMULA TOTAL	55,535,000
TA/HOUS.	2,227,000
GRAND TOTAL	57,762,000

[FR Doc. 86-15434 Filed 7-8-86; 8:45 am]
BILLING CODE 4510-30-C

NUCLEAR REGULATORY COMMISSION

Advisory Committee on Reactor Safeguards Subcommittee on Waste Management; Meeting

The ACRS Subcommittee on Waste Management will hold a meeting on July 21, 22 and 23, 1986, Room 1046, 1717 H Street, NW., Washington, DC.

The entire meeting will be open to public attendance.

The agenda for the subject meeting shall be as follows:

Monday July 21, 1986—8:30 A.M. until the conclusion of business
Tuesday July 22, 1986—8:30 A.M. until the conclusion of business
Wednesday July 23, 1986—8:30 A.M. until the conclusion of business

The Subcommittee will review: (1) EPA's development (with NRC's support) of residual radiation limits and the disposition of land, buildings, equipment and metals (including contaminated smelted alloys—NUREG-0518, Final Environmental Statement) resulting from the decontamination and decommissioning of nuclear power plants and fuel facilities; (2) the following High-Level Radioactive Waste (HLW) topics being addressed by the NRC Division of Waste Management (DWM) Staff: (a) Sorption and solubility Generic Technical Positions, (b) their 5-year plan, (c) the NRC-proposed Federally Funded R&D Center (FFRDC), and (d) the status of their review of DOE's Final Environmental Assessments (EAs) for the candidate repository sties nominated for site characterization; (3) the following topics being investigated under DWM's Low-Level Radioactive Waste (LLW) Program: (a) alternatives to shallow land burial, (b) radioactive wastes that are below regulatory concern, and (c) mixed radioactive and hazardous wastes; (4) the following waste management research topics under consideration by the Office of Nuclear Regulatory Research (RES): (a) The development of field data on the movement of radionuclides within the environment and the associated impact of heat-water-rock interactions, (b) the predicted performance of repository systems under realistic field conditions, and (c) setting priorities for waste management issues subject to rulemaking. The Subcommittee will also be briefed on the Department of Energy's Nevada Test Site (NTS) in preparation for its July 31–August 1 visit to that site.

Oral statements may be presented by members of the public with the concurrence of the Subcommittee Chairman; written statements will be accepted and made available to the Committee. Recordings will be permitted only during those portions of the meeting when a transcript is being kept, and questions may be asked only by members of the Subcommittee, its consultants, and Staff. Persons desiring to make oral statements should notify the ACRS staff member named below as far in advance as is practicable so that appropriate arrangements can be made.

During the initial portion of the meeting, the Subcommittee may exchange preliminary views regarding matters to be considered during the balance of the meeting. The Subcommittee will then hear presentations by and hold discussions with representatives of the NRC Staff and other interested persons regarding this review.

Further information regarding topics to be discussed, whether the meeting has been cancelled or rescheduled, the Chairman's ruling on requests for the opportunity to present oral statements and the time allotted therefor can be obtained by a prepaid telephone call to the cognizant ACRS staff members, Mr. Owen S. Merrill (telephone 202/634-1413) between 8:15 A.M. and 5:00 P.M. Persons planning to attend this meeting are urged to contact the above named individual one or two days before the scheduled meeting to be advised of any changes in schedule, etc., which may have occurred.

Dated: July 3, 1986.

Morton W. Libarkin,

Assistant Executive Director for Project Review.

[FR Doc. 86-15490 Filed 7-8-86; 8:45 am]

BILLING CODE 7590-01-M

[Docket No. 50-529]

Arizona Public Service Co. et al.; Palo Verde Nuclear Generating Station, Unit 2

Notice is hereby given that the Director, Office of Nuclear Reactor Regulation, has denied a Petition filed under 10 CFR 2.206 by Barbara S. Bush and Myron L. Scott on behalf of the Coalition for Responsible Energy Education regarding the Palo Verde Nuclear Generating Station (PVNGS), Unit 2. The Petitioner requested further licensing activity for Unit 2 be deferred pending completion of hearings on the issues raised in the Petition and that a Special Management Inspection Oversight Team and a systems-interaction and reliability study be constituted to insure management competence and the reliability of the PVNGS system. As a basis for the Petition, the Petitioner alleged that there has been a continuing pattern of managerial and administrative failures at PVNGS and that current schedular and economic pressures there are likely to exacerbate these problems.

The Staff has considered the Petitioner's allegations and has determined that they do not provide an adequate basis for the relief requested. The reasons are fully described in a "Director's Decision Under 10 CFR 2.206" (DD-86-08) which is available for public inspection at the Commission's Public Document Room located at 1717 H Street, NW., Washington, DC 20555, and at the Phoenix Public Library, Business, Science and Technology Department, 12 East McDowell Road, Phoenix, Arizona 85004.

A copy of the decision will be filed with the Secretary for the Commission's review in accordance with 10 CFR 2.206(c).

Dated at Bethesda, Maryland this 1st day of July, 1986.

For the Nuclear Regulatory Commission.

Harold R. Denton,

Director, Office of Nuclear Reactor Regulation.

[FR Doc. 86-15478 Filed 7-8-86; 8:45 am]

BILLING CODE 7590-01-M

[Docket No. 71-2 (50-280 and -281]

Virginia Electric and Power Co.; Issuance of Materials License SNM-2501 for the Surry Dry Cask Independent Spent Fuel Storage Installation at the Surry Power Station

The U.S. Nuclear Regulatory Commission (the Commission) has issued a materials license under the requirements of 10 CFR Part 72 to Virginia Electric and Power Company (VEPCO or the licensee) authorizing the receipt and storage of spent fuel in dry casks at an Independent Spent Fuel Storage Installation (ISFSI) located onsite at the Surry Power Station in Surry County, Virginia.

The function on the dry cask ISFSI is to provide interim storage of spent fuel from Surry Power Station Units 1 and 2. Spend fuel loading and cask preparation takes place within the Surry Power Station fuel handling building. The casks are them moved to the onsite ISFSI where they are placed on concrete slabs. The spend fuel is stored in an inert atmosphere inside massive metal casks which provide confinement, shielding, criticality control and passive heat removal.

The Commission's Office of Nuclear Material Safety and Safeguards has completed its environmental, safeguards, and safety reviews in support of the issuance of this license. The Commission authorized issuance of this license pursuant to § 2.764(c) of 10 CFR Part 2.

Following receipt of the VEPCO application October 8, 1982, a Notice of Proposed Action was published in the **Federal Register** on December 9, 1982 (47 FR 55441). Subsequently, VEPCO informed NRC by letter in March 1984 of its selection of the CASTOR V/21 design for its application. Revision of VEPCO's safety analysis report and updating of its environmental report were based on this design. The "Environmental Assessment (EA) Related to the Construction and Operation of the Surry Dry Cask Independent Spent Fuel Storage Installation" (dated April 1985), along with a Finding of No Significant Impact was issued and noticed in the **Federal Register** in accordance with 10 CFR Part 51 (50 FR 15517, April 18, 1985). The scope of the environmental assessment included the construction and operation of an ISFSI on the Surry site, including impact specifically derived from the cask to be used, the CASTOR V/21. NRC staff completed its safety review of the Topical Safety Analysis Report for the General Nuclear Systems, Inc., Castor V/21, in September 1985 and issued a letter of approval with a Safety Evaluation Report, as supplemented by letter dated April 30, 1986.

The staff has completed its safety review of the Surry site application. VEPCO's safety analysis report, submitted with its application, includes confirmation by VEPCO's reactor safety committee that no technical specification changes are required under the Surry reactor operating licenses to accommodate a Part 72 license for onsite storage, that joint operation of the reactor and onsite storage does not affect the safety margins of either one and that onsite storage is an independent operation as defined in Part 72. The staff's Safety Evaluation Report of the Surry Dry Cask Independent Spent Fuel Storage Installation was completed in May 1986.

Materials License SNM-2501, the staff's Environmental Assessment, Safety Evaluation Report, and other documents related to this action are available for public inspection and for copying for a fee at the NRC Public Document Room 1717 H Street, NW., Washington, DC, and at the Local Public Document Room at the Swem Library, College of William and Mary, Williamsburg, Virginia, 23185.

Dated at Silver Spring, Maryland this 2nd day of July 1986.

For the U.S. Nuclear Regulatory Commission.

Leland C. Rouse,

Chief, Advanced Fuel and Spent Fuel Licensing Branch, Division of Fuel Cycle and Material Safety.

[FR Doc. 86-15477 Filed 7-8-86; 8:45 am]

BILLING CODE 7590-01-M

OFFICE OF MANAGEMENT AND BUDGET

Working Group on the Quality of Economic Statistics

AGENCY: Office of Management and Budget.

ACTION: Notice of solicitation of comments on the quality of Federal economic statistics for use by the Working Group on the Quality of Economic Statistics.

FOR FURTHER INFORMATION CONTACT: Paul Bugg, Office of Management and Budget, telephone number (202) 395-3093 or Harry Scarr, Department of Commerce, telephone number (202) 377-2760.

SUMMARY: The President's Economic Policy Council has established a Working Group on the Quality of Economic Statistics, cochaired by the Department of Commerce and the Office of Management and Budget. This group is to report to the Council in late summer on the quality of economic statistics produced by the Federal government. The Working Group is seeking public comment on the quality and usefulness of such statistics to aid in the preparation of its report to the Council. The due date for receipt of comments is August 8, 1986.

Background

Economic statistics produced by Federal agencies play important roles in public and private decisionmaking. These uses require that economic statistics convey accurate and useful information in a timely manner. Periodic reviews of the accuracy, timeliness, and usefulness of statistical series produced by the Federal government help maintain existing quality and identify opportunities for improvement. The President's Economic Policy Council has established a Working Group on the Quality of Economic Statistics to review the quality of Federal economic statistics and develop options and recommendations for improvement. The Working Group is cochaired by the Department of Commerce and the Office of Management and Budget.

Specific Points on Which the Working Group Is Seeking Comments

(1) The usefulness to the public and private sectors of statistical series maintained by the Federal government. The Working Group is interested in identifying areas where current coverage is incomplete and series that provide more detail than is needed.

(2) The accuracy of economic indicators. The Working Group is interested in knowing the extent to which existing statistical series reflect the concepts commonly used in economic analysis and provide useful estimates of these concepts.

(3) The appropriateness of current series in terms of the tradeoff between timeliness and accuracy. Among the areas of concern are the need for economic data immediately following the reference period, the level of detail appropriate to such early reports, and the impact of revisions on the usefulness of the data. The Working Group is also interested in identifying series that are released too late to be useful.

Comment Procedures. Comments in response to this notice must be in writing. Comments will be accepted on any of the points listed above as well as any others that respondents believe would aid the Working Group in the preparation of its report.

Address: Please send two copies of your comments to the Working Group on the Quality of Economic Statistics, Office of Management and Budget, 3001 New Executive Office Building, Washington, D.C. 20503.

Due Date: To assure consideration, all comments must be received on or before August 8, 1986.

Wendy L. Gramm,

Administrator for Information and Regulatory Affairs, Office of Management and Budget.

Robert Ortner,

Under Secretary-designate for Economic Affairs, Department of Commerce.

[FR Doc. 86-15348 Filed 7-8-86; 8:45 am]

BILLING CODE 3110-01-M

SECURITIES AND EXCHANGE COMMISSION

[Release No. IC 15189; File No. 812-6306]

Barclays PLC; Application Pursuant to Section 6(c) for Exemption From All Provisions of the Act

July 2, 1986.

Notice is hereby given that Barclays PLC ("Applicant"), c/o Paul B. Ford, Jr.,

Simpson Thacher & Bartlett, One Battery Park Plaza, New York, New York 10004 filed an application on February 21, 1986, and an amendment thereto on June 17, 1986, for an order of the Commission pursuant to section 6(c) of the Investment Company Act of 1940 ("Act"), exempting Applicant from all provisions of the Act in connection with Applicant's proposed issuance and sale in the United States of its equity securities ("Ordinary Stock"), either directly or in the form of American depositary shares represented by American depositary receipts ("ADRs"), and to amend an order of the Commission, dated March 14, 1980, pursuant to which Applicant was exempted from all the provisions of the Act in connection with the issuance and sale of its commercial paper and other dept securities in the United States (Investment Company Act Release No. 11090) ("Prior Order"). All interested persons are referred to the application on file with the Commission for a statement of the representations contained therein, which are summarized below, and to the Act for its applicable provisions.

According to the application, Applicant represents that it is registered in England as a public corporation. Applicant states that its wholly-owned subsidiary and principal asset, Barclays Bank PLC ("Barclays Bank"), is a commercial bank and that, by virtue of its world-wide operations, Applicant is subject to extensive regulation by United Kingdom, United States and other banking authorities. According to the application, as of December 31, 1985, Applicant, together with its subsidiary companies, had total consolidated assets of approximately £65.2 billion and total liabilities of approximately £61.9 billion, of which £55.1 billion consisted of deposits, and that it constituted in terms of income before taxes and stockholders' equity, the largest bank in the United Kingdom and one of the largest financial institutions in the world.

Applicant states that the operating income of Applicant, together with its subsidiary companies ("Barclays Group") is derived principally from interest on lendings, finance lease receivables and deposits with banks. For the year ending December 31, 1985, 68% of income was derived from such sources; income from interest on securities accounted for less than 3% of its operating income.

The Barclays Group, according to the application, with its associated companies, conducts a commercial banking business in some 70 countries and is subject to banking regulation in each, including the reserve requirements and regulatory controls imposed by central banks and other authorities. Applicant states that the principal operation of the Barclays Group is located in the United Kingdom and the United States and that no other country accounts for more than 5% of consolidated assets.

Applicant states that it is subject to regulation in the United Kingdom by the Bank of England ("Bank"), the government-owned central bank. Under the Bank of England Act of 1946, the Bank is broadly empowered to request information from and make recommendations to banks, and if authorized by H.M. Treasury, to require compliance with such requests and recommendations. Applicant states there is close cooperation between the Bank and United Kingdom banks and banking is conducted through a number of accepted but uncodified standards and practices. The supervision of United Kingdom banks is comprehensive in scope, Applicant states, and is equivalent in protection to extensive, detailed regulation.

According to the application, the Barclays Group has a significant presence in the United States and that as of December 31, 1985, 15% of the total consolidated assets of the Barclays Group were located in the U.S. Applicant states that it and Barclays Bank PLC are subject to the provisions of the International Banking Act of 1978 ("IBA") which authorizes the Federal Reserve Board ("Board") to conduct direct examinations of each United States branch and agency of Barclays Bank, and in conjunction with state banking authorities, to establish reserve requirements for such branches and agencies.

Applicant states that under the IBA, Barclays Bank operates a federal branch in Seattle, which is licensed and supervised by the Comptroller of the Currency, and has an Edge Act subsidiary in Houston. Barclays Bank of New York, N.A., and Barclays Bank of Delaware, N.A., Applicant states, are national bank subsidiaries subject to regulation by the Comptroller of the Currency and the Federal Deposit Insurance Corporation ("Corporation").

Applicant and Barclays Bank are also registered under the Bank Holding Company Act of 1956 which, according to Applicant, empowers the Board to regulate the type of activities that foreign bank holding companies may transact in the United States and requires the filing of detailed annual reports with respect to such operations.

Applicant represents Barclays Bank is subject to extensive state regulation because it has licensed branches or agencies in New York, Atlanta, Boston, Chicago, Miami, Pittsburgh and San Francisco. Applicant also states that Barclays Bank of California, a subsidiary, is chartered in California and insured by the Corporation.

Applicant proposes to establish a market in the United States for its common stock and proposes several courses of action including, without limitation, an offering of ADRs which would be listed on NASDAQ or the New York Stock Exchange, or a direct primary offering of its common shares. Applicant may also make an offering of rights to existing shareholders resident in the United States in connection with any future rights offering in the United Kingdom, offer its shares to certain employees of the Barclays Group resident in the United States, and issue shares in connection with any future acquisitions that may be effected by Applicant or a member of the Barclays Group in the United States.

Applicant states that it will issue its equity securities in the United States only so long as (1) Barclays Bank remains a subsidiary and its principal asset, and (2) Barclays Bank remains a commercial bank subject to regulation as such under applicable United Kingdom banking legislation. Applicant also represents that it will issue its equity securities in the United States only if the Barclays Group has a presence in the United States that is substantial and which subjects its operations to regulation by United States federal or state banking authorities.

Applicant undertakes that it will appoint an agent to accept service of process in any action based on the equity securities issued under its requested exemptive order and instituted in any state or federal court by the holder thereof. Applicant also undertakes to accept jurisdiction in any state or federal court located in the City of New York in any action based on such equity securities instituted by the holder. Such appointment of an authorized agent for service of process and consent to jurisdiction will be irrevocable so long as any equity securities issued and sold by Applicant under its requested exemptive order in the United States are outstanding and held by persons that are citizens or residents of the United States.

Applicant further represents that it has no present intention of causing Barclays Bank to discontinue commercial banking operations in a

manner which will result in its ceasing to be subject to regulation under applicable United Kingdom banking legislation, or of causing the Barclays Group to discontinue commercial banking operations in the United States in a manner which will result in its ceasing to be subject to regulation under applicable United States federal or state banking legislation.

Applicant asserts that the intent of the IBA was to treat domestic and foreign banks in a non-discriminatory manner. Applicant states that the IBA subjects foreign banks to the same general regulation and supervision with respect to their United States activities as United States' banks. Applicant therefore asserts that the requested exemption is consistent with the public policy of the IBA.

Applicant states that the proposed exemption is consistent with the protection of investors because the regulation of Applicant by various banking laws provides investors in its equity securities the equivalent protections afforded by the Act. Banks in the United States are excepted from the Act, Applicant asserts, because they are subject to United States banking laws. Applicant states the public interest and protection of investors in the United States are served by United Kingdom and United States banking regulation of the Barclays Group. Moreover, Applicant states, extending the Act to include Applicant would preclude the issuance and sale by Applicant of its equity securities in the United States. Applicant maintains that it is at a competitive disadvantage with United States banks unless it can issue its equity securities in this country.

According to the application, the ability to offer and sell its equity securities in the U.S. will enable Applicant to offer an employee stock purchase and other stock related incentive plans. Applicant states that these plans will assist it in attracting and retaining employees in the United States.

Applicant concludes that it is consistent with the purposes and policies of the Act to treat it in the same manner as United States banks which under section 3(c)(3) of the Act are excepted from regulation under the Act. Although Applicant may not meet the definition of a bank under section 2(a)(5) of the Act, according to Applicant, the substantial presence of the Barclays Group in the United States through branches, agencies and subsidiaries, and the extensive regulation by federal and state banking authorities makes Applicant, in terms of United States banking operations and government supervision, the equivalent of a United States bank for purposes of the Act.

Notice is further given that any interested person wishing to request a hearing on the application may not later than July 25, 1986, at 5:30 p.m., do so by submitting a written request setting forth the nature of his interest, the reasons for such request, and the specific issues, if any, of fact or law that are disputed, to the Secretary, Securities and Exchange Commission, Washington, DC 20549. A copy of the request should be served personally or by mail upon Applicant at the address stated above. Proof of service (by affidavit or, in case of an attorney-at-law, by certificate) shall be filed with the request. After said date, an order disposing of the application will be issued unless the Commission orders a hearing upon request or upon its own motion.

For the Commission, by the Division of Investment Management, pursuant to delegated authority.

Shirley E. Hollis,

Acting Secretary.

[FR Doc. 86-15468 Filed 7-8-86; 8:45 am]

BILLING CODE 8010-01-M

[Release No. IC 15188; 812-6309]

Berliner Handels-und Frankfurter Bank et al.; Notice of Application

July 2, 1986.

Notice is hereby given that Berliner Handels-und Frankfurter Bank ("Bank"), a commercial bank organized under the laws of the Federal Republic of Germany, and BHF FINANCE (DELAWARE) INC. (the "Issuer"), a Delaware corporation wholly owned by the Bank (collectively, "Applicants"), c/o Michael Gruson, Esq. Sherman & Sterling, 153 East 53rd Street, 34th Floor, New York, New York 10022, filed an application on February 21, 1986, and an amendment thereto on July 2, 1986, for an order of the Commission pursuant to section 6(c) of the Investment Act of 1940) ("Act"), exempting the Applicants from all provisions of the Act. All interested persons are referred to the application on file with the Commission for a statement of the representations contained therein, which are summarized below, and to the Act for a statement of the relevant provisions thereof.

According to the application, the Bank is the sixth largest privately owned commercial bank in Germany in terms of consolidated assets, providing directly or through its subsidiaries, a wide range of commercial and investment banking services in Germany as well as internationally. The Applicants further state that in the United States, the Bank has a branch in New York which is licensed and regulated by the New York State banking authorities. Through its United States branch, the Bank takes deposits and extends loans, offers acceptance credit facilities, issues letters of credit, participates in syndicated loan transactions and engages generally in the business of commerical banking. In addition, the Bank has a wholly-owned subsidiary, BHF Securities Corporation, a Delaware corporation, registered as a broker-dealer and investment adviser and operating in New York City.

The application states that at December 31, 1984, deposits with the Bank (including demand, time and savings deposits and bonds and notes) totalled approximately 90% of the Bank's total liabilities (including capital) of approximately $3,658,000,000.[1] The aggregate principal amount of loans extended by the Bank constituted approximately 56% of the Bank's total assets of approximately $3,658,000,000 at such date.

The Applicants represent that the Bank is subject to extensive supervision and regulation by German banking authorities that is comparable in many respects to the supervision of United States commercial banks. The Bank is authorized to carry on a banking business under the Gesetz ueber das Kreditwesen (the "Federal Banking Law") and is subject to supervision and regulation by the Bundesaufsichtsamt fuer das Kreditwesen (the "Federal Banking Supervisory Authority") and by the Deutsche Bundesbank (the "German Central Bank"). Applicants recite a lengthy list of requirements imposed by the Federal Banking Authority. Further, among other duties, the German Central Bank assists the Federal Banking Supervisory Authority with regard to the supervision of banking activities. Finally, the Applicants stated that the Bank, by virtue of maintaining a branch in the United States, is subject to extensive United States federal regulation pursuant to the Bank Holding Company Act of 1956, and that the Bank's New York branch is licensed and regulated by the New York State banking authorities. The branch is subject to regulation said to be substantially similar to that imposed on New York State chartered banks.

The Applicants state that the Issuer is a Delaware corporation incorporated on April 19, 1984, all of whose outstanding capital stock is owned by the Bank. The

[1] United States Dollars computed using the exchange rate prevailing on December 31, 1984.

issuer represents that there has been, and undertakes that in the future there will be, no public offering of its capital stock or of any other of its equity issue. Similarly, the Bank undertakes that there will be no offering in the United States of the Bank's capital stock or of any other equity security of the Bank other than in conformity with applicable United States laws, regulations and rules. The Issuer's sole business will consist of issuing and selling the issuer's commercial paper notes (the "Notes") and depositing the proceeds from the sale thereof (the "Deposits") at the Grand Cayman Branch (the "Branch") of the Bank pursuant to a deposit Agreement (the "Deposit Agreement") to be entered into by the Issuer, the Branch and the Bank, and issuing and selling the Issuer's other debt securities and depositing the net proceeds from the sale thereof at the Branch in a manner similar to the Deposits.

Substantially all of the Issuer's assets will consist of a single evidence of indebtedness of the Branch issued to the Issuer evidencing the Issuer's Deposits. Under certain provisions of the Deposit Agreement, the Branch unconditionally agrees to repay to the Issuer each Deposit made by the Issuer at the Branch, including accrued interest thereto, on the maturity date of the Deposit. In the Deposit Agreement, the Branch waives any and all right of set-off it may have in respect of the Deposits. In addition, each Noteholder is assigned as security and granted a security in the Deposit and accrued interest corresponding to his Note. if the Issuer fails to pay a Note in accordance with its terms, the Deposit Agreement entitles the Noteholder to receive payment by the Branch of the Deposit and accrued interest.

The Bank confirms expressly in the Deposit Agreement that the aforementioned obligations of the Branch to the Issuer and to the Noteholder are its own obligations. The Bank in the Deposit Agreement expressly waives any defenses available to it against performance of its obligations to the extent that such defenses exist under Cayman Islands law and are based on insolvency, moratorium, liquidation or similar laws of the Cayman Islands affecting the Branch, or based on currency or foreign exchange laws of the Cayman Islands or acts of state of the Cayman Islands government relating to expropriation, seizures or moratorium of payment affecting the Branch as such or affecting the obligations of the Branch to repay the deposits in general.

The application states that the Notes will be sold in minimum denominations of $100,000, will have a maturity not exceeding nine months, and will neither be payable on demand prior to maturity nor eligible for any extension, renewal, or automatic "rollover" at the option of either the holders, or the Issuer. The Applicants state that the proceeds of the Notes wilal be used by the Bank for "current transactions" within the meaning of section 3(a)(3) of the Securities Act of 1933 (the "Securities Act"). The Issuer undertakes not to market any Notes prior to receiving an opinion of counsel to the effect that the proposed offering is exempt from the registration requirements of the Securites Act by virtue of section 3(a)(3) thereof. The Issuer dos not request Commisison review or approval of such opinion. The Issuer represents that, prior to their issuance, the Notes will have received one of the three highest investment grade ratings from at least one nationally recognized statistical rating organization and the Issuer's United States counsel shall have certified that the rating was received.

The application further states that the Notes will be offered publicly through one or more major dealers, only to the types of sophisticated and largely institutional investors that ordinarily participate in the United States commercial paper market. While an announcement of the establishment of the commercial paper facility may be made as a matter of record, the offering will not be advertised. The Issuer undertakes to insure that each dealer will furnish to each offeree a memorandum describing the businesses of the Bank and the Issuer and providing the most recent annual audited financial statements for the Bank, together with a description of the material differences between the German accounting principles utilized in the preparation of the financial statements of the Bank and generally accepted accounting principles as applied in the United States. The memorandum prepared by each dealer will be updated as promptly as practicable to reflect material adverse changes in the financial status of the Issuer or the Bank which are material to investors, and will be at least as comprehensive as memoranda customarily used in offering commercial paper in the United States. The Applicants consent to the inclusion, in any order granting the application, of an express condition that the Issuer comply with the undertakings in the last two sentences of this paragraph. They understand, however, that an inadvertent failure by a dealer to provide an offeree with a memorandum of the type described in this paragraph would not be viewed as a violation of the undertaking with respect to the furnishing of the memorandum. The application further states that the Issuer will appoint a major commercial bank to act as issuing and paying agent for the Notes ("Depositary").

Under German law and pursuant to the Deposit Agreement the repayment obligation of the Branch in respect of the Deposits is an obligation of the Bank. The Bank's obligations in respect of its liabilities to the Issuer will rank at least *pari passu* among themselves and with all other unsecured unsubordinated indebtedness (including deposit liabilities) of the Bank and superior to rights of shareholders; the holders of the Notes will have direct cause of action against the Bank in the event of any default in payment on the Notes.

The application states that the Bank will submit to the jurisdiction of any state or federal court in the Borough of Manhattan in the City of New York, and will appoint the Issuer as agent to accept any process which may be served in any action based upon its obligations to the Issuer. Such consent to jurisdiction and such appointment of an authorized agent to accept service of process will be irrevocable until all amounts due and to become due with respect to the Deposits and all obligations of the Bank to the Issuer as described herein have been paid. The authorized agent will not be, or be obligated to act as, a trustee for the holders of the Notes.

The application states that each Applicant may, from time to time, offer other of its debt securities for sale in the United States. The obligations of the Issuer in respect of any such debt securities issued by the Issuer will be supported by the Bank's guarantee, unless the Applicants file an application seeking to amend any order issued on this application to substitute the Bank's guarantee with a functional equivalent.

The application further states that the Applicants undertake that any future offering of their debt securities will have received one of the three highest investment grade ratings from at least one nationally recognized statistical rating organization, and that the Applicants' United States counsel shall have certified that the rating was received. However, no such rating shall be required to be obtained with respect to an offering of the Applicants or either Applicant's debt securities other than the Notes if, in the opinion of Applicant's United States counsel (counsel having taken into account for

the purposes thereof the doctrine of "integration" referred to in Rule 502 under the Securities Act and relevant "no-action" letters made public by the Commission), an exemption is available for the offering pursuant to subsection 4(2) of the Securities Act or Regulation D promulgated thereunder.

The Applicants undertake that any future offering of their debt securities in the United States will be made only pursuant to an applicable exemption from registration under the Securities Act, and any such future offering will be done on the basis of disclosure documents that are at least as comprehensive in their description of the Issuer or the Bank or both, as the case may be, their businesses and their financial statements as required by law and otherwise as comprehensive as is customary for United States offerings of similar securities.

The Bank will, in connection with any future offering of its debt securities in the United States and in connection with any future offering of the Issuer's debt securities in the United States which are supported by an obligation on the part of the Bank to pay the obligations of the Issuer in connection with such debt securities, appoint an agent to accept service of process in any suit, action or proceeding brought against the Bank on its obligations under its debt securities or under its obligation to pay the obligations of the Issuer in connection with the debt securities of the Issuer, and instituted in any state or federal court by the holder of any such debt securities. The Bank will expressly submit to the jurisdiction of any state or federal court located in the Borough of Manhattan in the City of New York with respect to any such suit, action or proceeding. Such appointment of an agent for service of process and such consent to jurisdiction shall be irrevocable until all amounts due and to become due in respect of such issuance of debt securities have been paid.

Notice is further given that any interested person wishing to request a hearing on the application may, not later than July 25, 1986, at 5:30 p.m., do so by submitting a written request setting forth the nature of his interest, the reasons for his request, and the specific issues, if any, of fact or law that are disputed, to the Secretary, Securities and Exchange Commission, Washington, DC 20549. A copy of the request should be served personally or by mail upon Applicant(s) at the address stated above. Proof of service (by affidavit or, in the case of an attorney-at-law, by certificate) shall be filed with the request. After said date, an order disposing of the application will be issued unless the Commission orders a hearing upon request or upon its own motion.

For the Commission, by the Division of Investment Management, pursuant to delegated authority.

Shirley E. Hollis,

Acting Secretary.

[FR Doc. 86-15469 Filed 7-8-86; 8:45 am]

BILLING CODE 8010-01-M

[Release No. IC-15190; File No. 812-64071]

Application and Opportunity for a Hearing; The Prudential Series Fund, Inc., and Pruco Life Series Fund, Inc.

July 2, 1986.

Notice is hereby given that The Prudential Series Fund, Inc. ("Prudential Fund") and Pruco Life Series Fund, Inc. ("Pruco Fund") (referred to collectively as "Applicants"), 3003 North Central Avenue, Phoenix, Arizona 85012, filed an application on June 11, 1986, for an order of the Commission, pursuant to section 17(b) of the Investment Company Act of 1940 (the "Act"), granting an exemption from section 17(a) of the Act in order to permit Pruco Fund to merge into Prudential Fund. All interested persons are referred to the application on file with the Commission for a statement of the representations of the Applicants, which are summarized below, and are referred to the Act and the rules thereunder for the text of the relevant provisions.

Applicants state that Prudential Fund is an open-end diversified management series investment company, organized under Maryland law and consisting of eight portfolios. Applicants further state that Pruco Fund is an open-end diversified management series investment company, organized under Maryland law and consisting of eight portfolios that correspond in investment objectives and policies to the eight Prudential Fund portfolios. The Prudential Insurance Company of America ("Prudential") is investment adviser to both Funds.

Applicants state that Prudential Fund is the investment medium for Prudential Separate Accounts, unit investment trusts registered under the Act, which invest in shares of the Prudential Fund portfolios on behalf of owners of variable annuity contracts issued by Prudential. They further state that Pruco Fund is the investment medium for Pruco Life Insurance Company ("Pruco Life") Separate Accounts and Pruco Life Insurance Company of New Jersey ("Pruco Life of New Jersey") Separate Accounts (collectively "Pruco Separate Accounts"), unit investment trusts registered under the Act, which invest in shares of Pruco Fund Portfolios on behalf of owners of variable annuity and variable life contracts issued by Pruco Life and Pruco Life of New Jersey. They also state that Pruco Life is a wholly-owned subsidiary of Prudential, and Pruco Life of New Jersey is a wholly-owned subsidiary of Pruco Life.

Applicants propose that Prudential Fund acquire all of the assets and assume all the liabilities of Pruco Fund in exchange for the issuance of shares of Prudential Fund to the shareholders of Pruco Fund. Applicants state that each Prudential Fund portfolio will acquire the assets and assume the liabilities of its corresponding Pruco Fund portfolio in exchange for the issuance of the shares of the associated class of Prudential Fund capital stock. Applicants represent that the proposed merger will be effected in accordance with Maryland law and with the terms and conditions stated in an Agreement of Merger and Plan of Reorganization (the "Agreement"). Applicants also state that the merger is intended to be a "statutory merger" or "reorganization" within the meaning of section 368(a)(1) of the United States Internal Revenue Code of 1954, as amended.

Applicants represent that the conversion of shares of each Pruco Fund portfolio held at the close of business on the effective date of the merger into full or fractional shares of the corresponding Prudential Fund portfolio will be accomplished on the basis of the net asset value of the respective Funds.

Applicants state that on June 2, 1986, the boards of directors of Prudential Fund and Pruco Fund unanimously authorized and approved the merger. They also state that the proposed merger will be submitted to shareholders of the two funds for approval, and the shareholders will vote as instructed by variable contractowners. A two-thirds affirmative vote of all outstanding voting shares on a portfolio-by-portfolio basis is necessary to approve the merger. Each contractowner is entitled to instruct how the number of shares related to his interest in the Pruco Separate Accounts or Prudential Separate Accounts will be voted, and shares held by Prudential or for which properly executed voting instruction forms are not received will be voted in the same proportion as that in which the other Fund shares of each portfolio are voted.

Applicants state that there are some significant differences between Prudential's investment advisory

agreement with Prudential Fund and its agreement with Pruco Fund. First, the flexible portfolios of Prudential Fund are charged more for investment management than are the flexible portfolios of Pruco Fund. Second, Prudential Fund bears its own expenses subject to the refund of portion of the investment advisory fee to the extent that the ordinary operating expenses of the Fund are greater than 1.00%, while Prudential bears all of the Pruco Fund's ordinary expenses in excess of the investment advisory fee of 0.40%. This advisory fee of 0.40% is applied to the aggregate assets of all of Pruco Fund's portfolios whereas each portfolio of Prudential Fund is charged a separate advisory fee. Third, Prudential's current agreement with Pruco Fund provides for a reduction in the rate of the management fee when Pruco Fund's assets reach certain amounts, but Prudential's current agreement with Prudential Fund contains no such provision. The board of directors of Pruco Fund have voted in favor of an amendment to the fund's investment management agreement that eliminates this scale-down in the advisory fee as of October 1, 1986, and this amendment will be submitted for approval by its shareholders on September 26, 1986. If this amendment is adopted, the third difference in the advisory agreements will no longer exist.

Applicants represent that should the merger be approved and effected, Pruco Life and Pruco Life of New Jersey will make estimated daily and precise monthly adjustments to contract values under existing contracts funded by the Pruco Separate Accounts, and on all future contracts issued on the same forms, in order to offset the impact on contract values of the higher charges assessed against Prudential Fund. Applicants assert that as a result of this decision, adopted by resolution of the boards of Pruco Life and Pruco Life of New Jersey, contractowners will not suffer any reduction in the benefits or values under their contracts attributable to the higher charges paid by Prudential Fund. Applicants further state that Prudential Fund shareholders will be asked to approve (pursuant to instructions from contractowners) a revised investment advisory agreement, which will lower the aforementioned limit on ordinary expenses from 1.00% to 0.75%.

Applicants state that the boards of directors of Prudential Fund and Pruco Fund are composed of the same five individuals. Each Fund also has the same persons serving in the same capacity as officers. Applicants further state that Prudential or its separate accounts legally own all of the outstanding shares of Prudential Fund. They also represent that all of the outstanding shares of Pruco Fund are legally owned by Prudential or by the Pruco Separate Accounts.

Applicants state that as a result of the relationships described above, they may be deemed to be under common control and, therefore, affiliated persons of each other, as defined by section 2(a)(3) of the Act, and for the purposes of the prohibitions set forth in section 17(a) of the Act. They also state that, alternatively, they may be deemed to be affiliated persons of affiliated persons of each other.

Applicants seek an order of the Commission, pursuant to section 17(b), exempting them from the provisions of section 17(a) of the Act. Applicants submit that the terms of the proposed merger comply with the standards set forth in section 17(b) of the Act. They further maintain that the terms of the proposed transaction are fair and reasonable and do not represent overreaching on the part of any person concerned. They state in this regard that the Boards of Directors of both Funds have unanimously approved the proposed merger as being in the best interest of the shareholders and contractowners and that the conversion of shares of Pruco Fund into shares of Prudential Fund will be accomplished on the basis of the net asset value of the respective Funds. They also represent that the primary purpose of the merger is to realize certain economies, and that the boards of directors of both Funds have concluded that the merger will promote more effective investment management and cost savings with regard to operating expenses. Applicants further represent that in determining that the merger was in the best interest of contractowners the Pruco Fund Board relied upon the Pruco Life and Pruco Life of New Jersey resolutions that address the question of offsetting the higher charges and expenses assessed against Prudential Fund.

Applicants submit that the proposed transaction is consistent with the policies of both Funds. They state that there are no significant differences between the Funds aside from the differences in investment advisory agreements and that cooresponding portfolios of the two Funds have virtually identical investment objectives and policies. They also submit that the proposed merger is consistant with the general purposes of the Act and would not result in any of the abuses that the Act was designed to prevent.

Applicants represent that the boards of both Funds have made the determinations required by Rule 17a-8 under the Act. They argue that the exemption provided by Rule 17a-8 would be available with respect to the proposed reorganization but for the direct and indirect ownership of Prudential Fund and Pruco Fund by Prudential. Applicants accordingly request exemption from section 17(a) of the Act.

Notice is further given that any interested person wishing to request a hearing on the application may, not later than July 28, 1986, at 5:30 p.m., do so by submitting a written request setting forth the nature of his interest, the reasons for his request, and the specific issues, if any, of fact or law that are disputed, to the Secretary, Securities and Exchange Commission, Washington, DC 20549. A copy of the request should be served personally or by mail upon Applicants at the address stated above. Proof of service (by affidavit or, in the case of an attorney-at-law, by certificate) shall be filed with the request. Persons who request a hearing will receive any notices and orders issued in this matter. After said date an order disposing of the applications will be issued unless the Commission orders a hearing upon request or upon its own motion.

For the Commission, by the Division of Investment Management, pursuant to delegated authority.

Shirley E. Hollis,

Acting Secretary.

[FR Doc. 86-15470 Filed 7-8-86; 8:45 am]

BILLING CODE 8010-01-M

[Release No. 34-23390; File No. SR-NASD-86-18]

Self-Regulatory Organizations; Notice of Filing and Order Granting Accelerated Approval of Proposed Rule Change Relating to Amendment to the Rules of Practice and Procedures for the Small Order Execution System and Related Statement of Policy of the Board of Governors Under Section A. 7., Part V of Schedule D of the National Association of Securities Dealers, Inc.

Pursuant to section 19(b)(1) of the Securities Exchange Act of 1934, 15 U.S.C. 78s(b)(1), notice is hereby given that on July 1, 1986, the National Association of Securities Dealers, Inc. filed with the Securities and Exchange Commission the proposed rule change

as described in Items I, II, and III below, which Items have been prepared by the self-regulatory organization. The Commission is publishing this notice to solicit comments on the proposed rule change from interested persons.

I. Self-Regulatory Organization's Statement of the Terms of Substance of the Proposed Rule Change

The following is the full text of a proposed amendment to the Rules of Practice and Procedures for the Small Order Execution System ("SOES"). Also set forth below is a related statement of policy of the Board of Governors under section A.7., Part V of Schedule D of the National Association of Securities Dealers, Inc. ("NASD") By-Laws waiving, under certain circumstances, the application of the fees applicable to the reporting of transactions through a computer to computer interface. The rule change shall be effective for a period of sixty (60) days to permit consideration by the Commission of approval of the proposed modification on a permanent basis, which is the subject of a separate rule filing. (New language is italicized, deleted language is bracketed.

* * * * *

Rules of Practice and Procedures For the Small Order Execution System

Fees Applicable to SOES

A fee of $.005 per share shall be assessable to SOES Market Makers for all transactions executed through SOES [.] *provided, however, that the minimum charge per execution shall be $.50 and the maximum charge per execution shall be $1.00.*

Section A.7., Part V of Schedule D.

Statement of Policy

The Board of Governors has determined that the operational port charge imposed for a computer to computer interface (CTCI) with the NASDAQ system for purposes of trade reporting and/or SOES order entry or market maker executions shall be rebated on a monthly basis to CTCI subscribers who enter or receive 1000 or more SOES executions during any such period.

II. Self-Regulatory Organization's Statement of the Purpose of, and Statutory Basis for, the Proposed Rule Change

In its filing with Commission, the self-regulatory organization included statements concerning the purpose of and basis for the proposed rule change and discussed any comments it received on the proposed rule change. The text of these statements may be examined at the places specified in Item IV below. The self-regulatory organization has prepared summaries, set forth in sections (A), (B) and (C) below, of the most significant aspects of such statements.

A. Self-Regulatory Organization's Statement of the Purpose of, and Statutory Basis for, the Proposed Rule Change

The purpose of the modifications proposed in this filing is to implement a permanent fee structure for SOES that will recover the fully distributed costs incurred in providing the service over a reasonable planning period taking into account both the current rate of growth in SOES utilization by members and the SOES User Committee's projections on future increased utilization of the service under the proposed rate structure. The fee proposed for application to SOES market makers, taking into account the minimum and maximum charge per execution, the rebate of CTCI fees to subscribers and the anticipated 20% increase in SOES executions projected to result from these two factors is expected to produce revenues of approximately $1.9 million. The projected annual cost of operating SOES for fiscal 1986 is $1,691,000. The annualized cost of rebating CTCI fees to an estimated 14 subscribers entering or executing 1000 or more trades by means of such facility would be an additional amount estimated at $202,000 for a total projected revenue requirement for SOES of $1,893,000.

The NASD believes that the assumed increase in SOES volume, projected by members of the SOES User Committee is realistic and fully achievable given the historical pattern of SOES utilization. The SOES fee originally formulated and approved by the Commission in SR-NASD-84-28 was based upon a target level for SOES volume of 4500 trades per day for an annualized SOES volume of 225 million shares per year. The more recent figures from March 1986, relied upon by the SOES User Committee and the Board, demonstrated that SOES volume averaged 7,726 daily trades with 2.049 million shares traded per day. On several occasions, volume during the month exceeded 9,000 trades per day. If a conservative projection of 5% future growth for SOES during the current year were to be utilized the daily average would equal 8,000 trades with 2.114 million shares traded per day resulting in a minimum estimated annual SOES volume of approximately 533 million shares. Thus, measured against the period of the prior two years, SOES will have experienced nearly a doubling in the volume projected as the basis for the original fee. The SOES User Committee and the Board expressed the view, that a 20% increase in volume was a more realistic projection because of the rate modification provided for in this filing and the advent of new linkages, such as ADP service, which connects its individual subscribers to SOES and is expected to significantly increase member order entry through the same systems currently being utilized by these firms to route orders in listed securities.

The proposed SOES fees and waiver of the CTCI fee have been based upon cost information and utilization projections for application over a three (3) year planning horizon. The NASD plans to reevaluate the level of the SOES fee to assure that the balance of costs and revenues derived from SOES remain in relative parity. If such is not the case, appropriate action will be taken.

The statutory basis for the proposed rule change is found in section 11A(a)(1) (B) and (C)(i), 15A(b) (5) and (6), and 17A(a)(1) (B) and (C) of the Securities Exchange Act of 1934 ("Act"). Section 11A(a)(1) (B) and (C)(i) sets forth the Congressional goal of achieving more efficient execution of transactions through new data processing and communications techniques. The Commission order initially approving the operation of SOES, recognized that automated execution systems such as SOES benefit both investors and the over-the-counter market by increasing the speed and efficiency of market making, and stated that "SOES provides significant order routing, execution, comparison and clearing efficiencies." In this connection, the NASD has exhibited its willingness to expand the availability of SOES by responding to requests related to possible means of linking SOES and other systems in a fair and efficient manner, e.g. ADP, and shall continue to do so in the future.

Section 15A(b)(5) requires that the rules of the NASD "provide for the equitable allocation of reasonable dues, fees and other charges among members and issuers and other persons using any facility or system which the Association operates or controls." Section 15A(b)(6) "requires that the rules of the Association be designed to foster cooperation and coordination with persons engaged in regulatory, clearing, settling, processing information with respect to, and facilitating transactions in securities, to remove impediments to and perfect the mechanism of a free and open market . . ." The fee formulated by the NASD for application to SOES has been determined on the basis of the fully distributed cost of operating that system

spread over the reasonably achievable number of trades projected to be executed through the system. Moreover, the minimum and maximum charge provides a parameter for the charge attributable to individual trades which limits the variation in SOES execution costs based solely upon the number of shares involved in the trade and recognizes to a far greater extent the limited measurable variation in cost between an execution involving 10 shares or 1000 shares.

The cost of executing a 1000 share order will be reduced from $5.00 to $1.00, which will make the execution of such orders considerable more attractive to members through SOES. Presently 1,000 share orders executed through SOES account for only approximately 6% of the total of all orders in NASDAQ/NMS securities executed by members. This percentage is significantly lower than executions of smaller size, such as 200 share orders in NASDAQ/NMS securities through SOES which account for approximately 15% of the total of all such orders executed. Moreover, the relative percentages of 200 share and 1000 share trades is approximately 16% and 13% of total NASDAQ/NMS volume respectively. The NASD believes that the current flat charge of $.005 per share is the reason for this disparity and that the new miximum charge will encourage substantial additional volume to be entered in the system at the 200 to 1000 share level. An additional aspect of the pricing formulation is the waiver of the CTCI fee for those members entering or receiving more than 1000 executions per month. The Commission's initial order on SOES recognized that a number of execution systems are currently being operated by operator's which are not regulated in the same manner as the NASD. These operators are able to offer their service at a substantially lower overall price to subscribers through bundling of services and absorption of AT&T line fees and computer interface charges. The limited ability to rebate CTCI fees for members entering 1000 or more trades per month will permit the NASD to offer SOES at a rate which is less economically disadvantageous to members in comparison to operators of other existing systems.

Section 17A(1) (b) and (c) sets forth the Congressional goal of reducing costs involved in the clearance and settlement process through new data processing and communications techniques. The NASD believes that approval of the proposed fee structure for SOES will further these ends by providing an enhanced mechanism for the efficient and economic execution clearance transactions and stimulate the automated capture of additional trades, for purposes of clearing, in over-the-counter securities.

B. Self-Regulatory Organization's Statement on Burden on Competition

The collection of individual fees which, in total, adequately cover the cost of operating SOES is a necessary prerequisite to the effective operation of a neutral industry owned and operated automated system for the execution of transactions in over-the-counter securities. SOES is a service to which participants subscribe on a voluntary basis, and the cost related fees proposed herein for application to the service are believed to impose no burden upon competition. More importantly, the choice of SOES in relation to other systems will be based upon the determination of market makers that the service provided by SOES justifies its cost. Rather the new fees are expected to substantially increase participation in SOES thereby providing the basis for future reduction in the fees charged to members and potential consequent savings to investors generally. To the extent that any burden on competition may be found to exist, it is believed that the benefit of the increased efficiency of SOES will outweigh any potential burden upon competition and materially advance the purpose to be served under the previously referenced sections of the Act.

C. Self-Regulatory Organization's Statement on Comments on the Proposed Rule Changes Received From Members, Participants, or Others

Comments were neither solicited nor received in connection with the proposed fees applicable to SOES.

III. Date of Effectiveness of the Proposed Rule Change and Timing for Commission Action

The NASD requests the Commission to find good cause for approving the proposed rule change prior to the 35th day after its publication in the **Federal Register**, and, in any event, by July 1, 1986, the scheduled expiration date for the SOES schedule of charges now in effect. The NASD believes that the rule proposal will benefit members and public investors by providing more rapid and cost-effective processing of transactions through SOES while assuring that such transactions are effected at the best price available in the market at any particular point in time. The NASD believes that good cause exists to accelerate the effectiveness of the proposed rule change to July 1, 1986 for application during the pendency of the Commission's consideration of the permanent rule proposal contained in File No. SR-NASD-86-19.

The Commission finds that the proposed rule change is consistent with the requirements of the Act and the rules and regulations thereunder applicable to the NASD and, in particular, the requirements of section 11A(a)(1) (B) and (C), 15A(b) (5) and (6), and 17A(a)(1) (B) and (C) and the rules and regulations thereunder.

The Commission finds good cause for approving the proposed rule change prior to the 35th day after the date of publication of notice of filing thereof, in that accelerated approval and the implementation of the rule proposal on a temporary basis will benefit public investors by providing for efficient and cost-effective processing of transactions through SOES while assuring that such transactions are executed at the best price available in the market at any particular point in time. The Commission recognizes that the schedule of charges applicable to SOES are due to expire on July 1, 1986 and that Commission action on an accelerated basis is necessary to assure the NASD of the ability to continue to receive reasonable fees for use of the SOES system. The Commission also notes that the issue involving the fees to be charged for SOES will be noticed for public comment and, as discussed above, the Commission believes that the benefits of approval of this temporary rule change outweigh any potential adverse effects to the commentators or other market participants during the short period of the rule change's effectiveness.

IV. Solicitation of Comments

Interested persons are invited to submit written data, views and arguments concerning the foregoing. Persons making written submissions should file six copies thereof with the Secretary, Securities and Exchange Commission, 450 5th Street, NW., Washington, DC 20549. Copies of the submission, all subsequent amendments, all written statements with respect to the proposed rule change that are filed with the Commission, and all written communications relating to the proposed rule change between the Commission and any person, other than those that may be withheld from the public in accordance with the provisions of 5 U.S.C. 552, will be available for inspection and copying in the Commission's Public Reference Section, 450 Fifth Street, NW., Washington, DC 20549. Copies of such filing will also be

available for inspection and copying at the principal office of the above-mentioned self-regulatory organization. All submissions should refer to the file number in the caption above and should be submitted by July 30, 1986.

It is therefore ordered, pursuant to section 19(b)(2) of the Act, that the proposed rule change referenced above be, and hereby is, approved.

For the Commission, by the Division of Market Regulation, pursuant to delegated authority.

Shirley E. Hollis,

Acting Secretary.

[FR Doc. 86-15467 Filed 7-8-86; 8:45 am]

BILING CODE 8010-01-M

[File No. 22-14986]

Order granting Application; The Western Union Telegraph Company

July 3, 1986.

The Western Union Telegraph Company (the "Applicant") has filed an application pursuant to clause (ii) of section 310(b)(1) of the Trust Indenture Act of 1939, as amended (the "Act"), for a finding by the Securities and Exchange Commission (the "Commission") that the trusteeships of J. Henry Schroder Bank & Trust Company ("Schroder"), a corporation duly organized and existing under the laws of the State of New York, under certainindentures of The Western Union Telegraph Company (the "Company") which were heretofore qualified under the Act are not so likely to involve a material conflict of interest as to make it necessary in the public interest or for the protection of investors to prevent Schroder from acting as trustee under any of such indentures.

The Company has issued and outstanding, as of March 1, 1986, the following debt securities secured by the following indentures, in each case, between the Company and Schroder, as trustee:

(i) $10,000,000 principal amount of 5¼% Sinking Fund Debentures Due 1987, under an Indenture dated as of February 1, 1962 (the "1962 Indenture");

(ii) $12,500,000 principal amount of 6½% Sinking Fund Debentures Due 1989, under an Indenture dated December 15, 1966 (the "1966 Indenture");

(iii) $26,820,000 principal amount of 8.45% Sinking Fund Debentures Due March 15, 1996, under an Indenture dated as of march 15, 1971;

(iv) $38,163,000 principal amount of 7.90% Sinking Fund Debentures due May 15, 1997, under an Indenture dated as of March 15, 1972;

(v) $36,597,000 principal amount of 8.10% Sinking Fund Debentures due August 15, 1998, under an Indenture dated as of March 1, 1973;

(vi) $8,334,000 principal amount of 10% Notes due August 1, 1986, under an Indenture dated as of August 1, 1976.

(vii) $31,468,000 principal amount of 9¼% Sinking Fund Debentures due December 1, 1997, under an Indenture dated as of December 1, 1977.

(viii) $75,000,000 principal amount of 16% Notes Due June 15, 1991, under an Indenture dated as of June 15, 1981.

(ix) $100,000,000 principal amount of 13¼% Sinking Fund Debentures Due October 1, 2008, under an Indenture dated as of July 1, 1983; and

(x) $50,000,000 principal amount of 13⅝% Notes Due 1994, under an Indenture dated as of March 15, 1984.

In connection with the appointment of Schroder as successor trustee under each of the above named indentures, the Company applied to the Commission, by application dated January 28, 1985 (the "1985 Application"), for an order to exclude such indentures from the operation of section 310(b)(1) of the Act. In response, the Commission issued an order, dated March 11, 1985 (the "1985 Order"), pursuant to which it excluded the above named indentures from the operation of section 310(b)(1) of the Act.

In addition the securities outstanding under the indentures subject to the 1985 Order, the Company has issued and outstanding $26,400,000 principal amount of 5% Sinking Fund Debentures Due 1992 under an Indenture dated as of February 1, 1964 (the "1964 Indenture"), between the Company and Chemical Bank, formerly Chemical Bank New York Trust Company (the 1964 Indenture and the indentures subject to the 1985 Order shall hereinafter be referred to collectively as the "Indentures" and sometimes individually as an "Indenture").

Chemical Bank, the original trustee (the "Resigning Trustee") under the 1964 Indenture, is resigning and the Company is duly appointing Schroder as successor trustee, which appointment Schroder is accepting, all pursuant to an Instrument of Resignation, Appointment and Acceptance, among the Company, the Resigning Trustee and Schroder.

The Commission on June 12, 1986, having issued a notice of the filing of said application and opportunity for hearing thereon (Trust Indenture Release No. 2012);

No request for a hearing on the application having been received prior to the expiration of the time allowed by the notice of such requests;

It appearing to the Commission that trusteeships under the several indentures are not so likely to involve a material conflict of interest so as to make it necessary in the public interest or for the protection of investors to disqualify Schroder from acting under any of the Indentures;

It is ordered that the application of the Western Union Telegraph Company in the premises be, and the same is hereby granted.

For the Commission, by the Division of Corporation Finance, pursuant to delegated authority.

Shirley E. Hollis,

Acting Secretary.

[FR Doc. 86-15471 Filed 7-8-86; 8:45 am]

BILLING CODE 8010-01-M

DEPARTMENT OF TRANSPORTATION

Fitness Determination of Wise Aviation Company

AGENCY: Department of Transportation.

ACTION: Notice of commuter air carrier fitness determination—Order 86-7-8, order to show cause.

SUMMARY: The Department of Transportation is proposing to find that Wise Aviation Company is fit, willing, and able to provide commuter air service under section 419(c)(2) of the Federal Aviation Act.

RESPONSES: All interested persons wishing to respond to the Department of Transportation's tentative fitness determination should file their responses with the Special Authorities Division, P-47, Department of Transportation, 400 7th Street, SW., Room 6420, Washington, DC 20590, and serve them on all persons listed in Attachment A to the order. Responses shall be filed no later than July 22, 1986.

FOR FURTHER INFORMATION CONTACT: Kathy A. Lusby, Special Authorities Division, Department of Transportation, 400 7th Street, SW., Washington, DC 20590, (202) 755-3812.

Dated: July 1, 1986.

Matthew V. Scocozza,

Assistant Secretary for Policy and International Affairs.

[FR Doc. 86-15356 Filed 7-8-86; 8:45 am]

BILLING CODE 4910-62-M

[Docket 44016]

U.S.-Japan Small Package Service Proceeding; Hearing

Notice is hereby given that a Hearing in the above-entitled proceeding is scheduled to be held commencing on October 1, 1986, at 9:30 a.m. (local time), in Room 5332, Nassif Bldg., 400 7th Street, SW., Washington, DC before the undersigned.

Dated at Washington, DC, July 2, 1986.

Elias C. Rodriguez,

Chief Administrative Law Judge.

[FR Doc. 86-15355 Filed 7-8-86; 8:45 am]

BILLING CODE 4910-62-M

Federal Highway Administration

Environmental Impact Statement: Lincoln, NE

AGENCY: Federal Highway Administration (FHWA), DOT.

ACTION: Notice of intent.

SUMMARY: The FHWA is issuing this notice to advise the public that an environmental impact statement will be prepared for a proposed highway project in the City of Lincoln in Lancaster County, Nebraska.

FOR FURTHER INFORMATION CONTACT: Mr. Philip E. Barnes, District Engineer, Federal Highway Administration, Federal Building, Room 487, 100 Centennial Mall North, Lincoln, Nebraska 68508, Telephone: (402) 471-5527. Mr. Gerald Grauer, Project Development Engineer, Nebraska Department of Roads, P.O. Box 94759, Lincoln, Nebraska 68509, Telephone: (402) 479-4795.

SUPPLEMENTARY INFORMATION: The FHWA, in cooperation with the Nebraska Department of Roads is preparing an environmental impact statement (EIS) for a proposal to provide a roadway connection from Highway N-2 (10th Street) to US-77 (West Bypass) along the alignment of Van Dorn Street. The distance involved in the described area is approximately 1.2 miles and is located in the southwest portion of the City of Lincoln, Nebraska. This proposal is being considered to develop a plan to reroute Highway N-2 traffic out of downtown Lincoln, and to provide for existing and projected traffic demands in the Van Dorn Street area.

Alternatives under consideration include (1) taking no action; and (2) the construction of a four-lane divided roadway. Included as a part of the construction alternative would be a viaduct over the railroad tracks crossing Van Dorn Street.

A public information meeting was held in Lincoln on October 9, 1985, to discuss the concerns of the immediate community and the general public. No formal scoping meeting is planned at this time. A public hearing will be held after the EIS has been made available for public and agency review and comment. Public notice will be given of the time and place of the public hearing.

To ensure that the full range of issues related to this proposed action are addressed and all significant issues identified, comments and suggestions are invited from all interested parties. Comments and questions concerning the proposed action and the EIS should be directed to the FHWA or the Nebraska Department of Roads at the addresses provided above.

Issued on: June 30, 1986.

Philip E. Barnes,

District Engineer, Nebraska Division, Federal Highway Administration, Lincoln, Nebraska.

[FR Doc. 86-15416 Filed 7-8-86; 8:45 am]

BILLING CODE 4910-22-M

Research and Special Programs Administration

Applications for Exemptions

AGENCY: Research and Special Programs Administration, DOT.

ACTION: List of applicants for exemption.

SUMMARY: In accordance with the procedures governing the application for, and the processing of, exemptions from the Department of Transportation's Hazardous Materials Regulations (49 CFR Part 107, Subpart B), notice is hereby given that the Office of Hazardous Materials Transportation has received the applications described herein. Each mode of transportation for which a particular exemption is requested is indicated by a number in the "Nature of Application" portion of the table below as follows: 1—Motor vehicle, 2—Rail freight, 3—Cargo vessel, 4—Cargo-only aircraft, 5—Passenger-carrying aircraft.

DATE: Comment period closes August 11, 1986.

ADDRESS COMMENTS TO: Dockets Branch, Research and Special Programs Administration, U.S. Department of Transportation, Washington, DC 20590.

Comments should refer to the application number and be submitted in triplicate.

FOR FURTHER INFORMATION CONTACT: Copies of the applications are available for inspection in the Dockets Branch, Room 8426, Nassif Buildings, 400 7th Street, SW. Washington, DC.

NEW EXEMPTIONS

Application	Applicant	Regulations(s) affected	Nature of exemption thereof
9634-N	Luxfer USA Limited, Riverside, CA	49 CFR 173.302(a)(1), 173.304(a), (d), 175.3	To manufacture, mark and sell a non-DOT specification fully overwrapped aluminum lined composite cylinder for use in transporting various nonflammable and flammable gases. (modes 1, 2, 3, 4).
9635-N	J.J. & A.J., Inc. Anaheim, CA	49 CFR 173.34(e)	To extend the periodic retest period for 3A, 3AX, 3AA, 3AAX and 3T cylinders from 5 years to 10 years when they sucessfully pass both the required hydrostatic test and the acoustic emission test. (modes 1, 2, 3).
9636-N	CRC Wireline, Inc., Grand Prairie, TX	49 CFR 173.110(c)(1), 173.53(u), 173.80(b), (e).	To authorize shipment of specially designed charged well jet perforating guns, Class A and C explosives equipped with detonators. (modes 1, 2).
9637-N	Connelly Containers, Inc., Bala Cynwyd, PA	49 CFR 173.154, 173.245b, 173.365	To manufacture, mark and sell non-DOT specification nonreusable fiberboard bulk boxes lined with 0.006 inch polyethylene film for shipment of certain flammable, organic peroxide, oxidizers and poison B solid materials. (modes 1).
9638-N	The Garrett Corporation., Tempe, AZ	49 CFR 173.302(a), 175.3	To manufacture, mark and sell non-DOT specificaton cylinders, manufactured of Inconel 718 steel, comparable to DOT Specification 3HT for shipment of helium, classed as nonflammable gas. (modes 1, 2, 3, 4).

This notice of receipt of applications for new exemptions is published in accordance with section 107 of the Hazardous Materials Transportation Act (49 U.S.C. 1806; 49 CFR 1.53(e)).

Issued in Washington, DC, on July 2, 1986.

J. Suzanne Hedgepeth,

Chief, Exemptions Branch, Office of Hazardous Materials Transportation.

[FR Doc. 86-15425 Filed 7-8-86; 8:45 am]

BILLING CODE 4910-60-M

Applications for Renewal or Modification of Exemptions or Applications To Become Party to an Exemption

AGENCY: Research and Special Programs Administration, DOT.

ACTION: List of applications for renewal or modification of exemptions or application to become a party to an exemption.

SUMMARY: In accordance with the procedures governing the application for, and the processing of, exemptions from the Department of Transportation's Hazardous Materials Regulations (49 CFR Part 107, Subpart B), notice is hereby given that the Office of Hazardous Materials Transportation has received the applications described herein. This notice is abbreviated to expedite docketing a public notice. Because the sections affected, modes of transportation, and the nature of application have been shown in earlier **Federal Register** publications, they are not repeated here. Except as otherwise noted, renewal applications are for extension of the exemption terms only. Where changes are requested (e.g. to provide for additional hazardous materials, packaging design changes, additional mode of transportation, etc.) they are described in footnotes to the application number. Application numbers with the suffix "X" denote renewal; application numbers with the suffix "P" denote party to. These applications have been separated from the new applications for exemptions to facilitate processing.

DATES: Comment period closes July 28, 1986.

ADDRESS COMMENTS TO: Dockets Branch, Research and Special Programs Administration, U.S. Department of Transportation, Washington, DC 20590.

Comments should refer to the application number and be submitted in triplicate.

FOR FURTHER INFORMATION CONTACT: Copies of the applications are available for inspection in the Dockets Branch, Room 8426, Nassif Buildings, 400 7th Street, SW, Washington, DC.

Application No.	Applicant	Renewal of exemption
3142-X	U.S. Department of Energy, Washington, DC.	3142
3330-X	General Electric Co., Schenectady, NY.	3330
6299-X	Minnesota Valley Engineering, Inc., New Prague, MN [1].	6299
6418-X	Western Farm Service, Inc., Walnut Creek, CA.	6418
6442-X	U.S. Department of Defense, Falls Church, VA.	6442
6530-X	The Great Plains Welding Supply Co., Cheyenne, WY.	6530
6538-X	Optimus, Inc., Bridgeport, CT	6538
6538-X	Hanco International, Inc., Miami, FL	6538
6543-X	Texas Instruments, Inc., Dallas, TX	6543
6543-X	Corning Glass Works, Corning, NY	6543
6610-X	Catalyst Resources, Inc., Elyria, OH.	6610
6651-X	Heatbath Corp., Chicago, IL	6651
6694-X	Eurotainer, S.A., Paris, France	6694
6694-X	Arbel-Fauvet-Girel, Paris, France	6694
6695-X	do	6695
6724-X	U.S. Department of Defense, Falls Church, VA.	6724
6762-X	DuBois Chemical Co., Cincinnati, OH.	6762
6932-X	Eurotainer, S.A., Paris, France	6932
6932-X	Arbel-Fauvet-Girel, Paris, France	6932
6944-X	U.S. Department of Defense, Falls Church, VA.	6944
7097-X	Fuller System, Inc., Woburn, MA	7097
7259-X	Monsanto Chemical Co., St. Louis, MO.	7259
7285-X	Arbel-Fauvet-Girel, Paris, France	7285
7862-X	General Electric Co., Milwaukee, WI [2].	7862
7872-X	Baker Performance Chemicals, Inc., Houston, TX.	7872
7909-X	EMCO, Inc., Little Rock, AR	7909
8060-X	Arbel-Fauvet-Girel, Paris, France	8060
8060-X	SLEMI, Paris, France	8060
8101-X	U.S. Department of Defense, Falls Church, VA.	8101
8141-X	GTE Products Corp., Waltham, MA	8141
8168-X	Container Corporation of America, Wilmington, DE [3].	8168
8215-X	Olin Corp., East Alton, IL [4]	8215
8236-X	Talley Defense Systems, formerly Talley Industries, Mesa, AZ [5].	8236
8287-X	Rohm and Haas Co., Philadelphia, PA [6].	8287
8445-X	Aqua-Tech, Inc., Port Washington, WI.	8445
8464-X	Garrett Pneumatic Systems Division, Tempe, AZ.	8464
8489-X	FMC Corp., Philadelphia, PA	8489
8489-X	Degussa Corp., Teterboro, NJ	8489
8509-X	Mobay Corp., Pittsburgh, PA	8509
8809-X	Continental Group, Inc., Lombard, IL.	8809
8826-X	Phoenix Air, Marietta, GA	8826
8862-X	Union Carbide Corp., Danbury, CT [7].	8862
8919-X	The Upjohn Co., Kalamazoo, MI	8919
8932-X	Catalyst Resources, Inc., Elyria, OH.	8932
8944-X	Union Carbide Corp., Danbury, CT [8].	8944
8963-X	Atlantic Research Corp., Gainesville, VA.	8963
9052-X	Chemical Handling Equipment Co., Inc., Southfield, MI [9].	9052
9054-X	Florida Drum Company, Inc., Pine Bluff, AR [10].	9054
9193-X	Schlumberger Well Services, Houston, TX.	9193
9193-X	Schlumberger Offshore Services, Houston, TX.	9193
9266-X	Eurotainer, S.A., Paris, France	9266
9430-X	Bondico, Inc., Jacksonville, FL [11]	9430

[1] To authorize an additional model portable tank for shipment of certain nonflammable gases.
[2] To authorize an additional xenon detector design.
[3] To authorize additional hazardous materials and classes of materials authorized for shipment in DOT Specification 21C fiber drum.
[4] To authorize a 3-gallon capacity plastic bucket instead of a porcelain bucket to contain explosive scrap materials.
[5] To renew; and revise criteria for the passive restraint assembly and to authorize a DOT Specification 12B65 fiberboard box as additional packaging.
[6] To increase inside polyethylene bottles from 9-pint capacity to 10.
[7] To renew and authorize shipment of ethylene oxide, classed as a flammable liquid.
[8] To authorize retesting, under existing terms of the exemption, of DOT-3AAX and 3T specification cylinders other than those owned or leased by Union Carbide.
[9] To authorize use of a rupture disk on polyethylene portable tanks for shipment of certain corrosive materials, flammable liquids and hydrogen peroxide solutions, containing 52 percent or less, transported by rail or highway.
[10] To reinstate exemption to provide for shipment of benzoyl peroxide 50% concentration in DOT Specification 34 containers of 55 gallon capacity.
[11] To authorize an optional 12 inch lid configuration on the polyethylene/fiberglass 90 gallon capacity salvage drum.

Application No.	Applicant	Parties to exemption
5951-P	McKesson Co., Spartanburg, SC	5951
6518-P	Texas Alkyls, Inc., Westport, CT	6518
6752-P	ATOCHEM, Paris, France,	6752
6762-P	Polymetrics, Inc., Jenkintown, PA	6762
7052-P	Smith Drilling Systems, Houston, TX.	7052
7052-P	Telonics, Inc., Mesa, AZ	7052
7052-P	Toshiba Battery Co., Ltd., Tokyo, Japan.	7052
7060-P	Airborne Express, Inc., Wilmington, OH.	7060
7607-P	Union Pacific Railroad Co., Omaha, NE.	7607
7607-P	Baker/TSA, Inc., Beaver, PA	7607
7991-P	Burlington Northern Railroad Co., Ft. Worth, TX.	7991
8127-P	Wolff Walsrode AG, Walsrode, West Germany.	8127
8445-P	University of Maryland, Baltimore, MD.	8445
8582-P	Consolidated Rail Corp., Philadelphia, PA.	8582
8723-P	W. A. Murphy, Inc., El Monte, CA	8723
9275-P	American Critical Care, McGaw Park, IL.	9275
9331-P	American Hoechst Corp., Somerville, NJ.	9331
9467-P	Eastman Kodak Co., Rochester, NY.	9467
9571-P	Environmental Health Research & Testing, Inc., Lexington, KY.	9571

This notice or receipt of applications for renewal of exemptions and for party to an exemption is published in accordance with section 107 of the Hazardous Materials Transportation Act (49 U.S.C. 1806; 49 CFR 1.53(e)).

Issued in Washington, DC, on July 2, 1986.

J. Suzanne Hedgepeth,

Chief, Exemptions Branch, Office of Hazardous Materials Transportation.

[FR Doc. 86-15426 Filed 7-8-86; 8:45 am]

BILLING CODE 4910-60-M

Sunshine Act Meetings

Federal Register
Vol. 51, No. 131
Wednesday, July 9, 1986

This section of the FEDERAL REGISTER contains notices of meetings published under the "Government in the Sunshine Act" (Pub. L. 94-409) 5 U.S.C. 552b(e)(3).

CONTENTS

	Item
Federal Deposit Insurance Corporation	1
Pacific Northwest Electric Power and Conservation Planning Council	2
Federal Reserve System	3-5
Nuclear Regulatory Commission	6
Commission on Civil Rights	7

1

FEDERAL DEPOSIT INSURANCE CORPORATION

Pursuant to the provisions of the "Government in the Sunshine Act" (5 U.S.C. 552b), notice is hereby given that at 3:50 p.m. on Wednesday, July 2, 1986, the Board of Directors of the Federal Deposit Insurance Corporation met in closed session, by telephone conference call, to adopt a resolution making funds available: (1) For the payment of insured deposits made in National Bank of Texas, Austin, Texas, which was closed by the Deputy Comptroller of the Currency, Office of the Comptroller of the Currency, on Wednesday July 2, 1986, and (2) for an advance payment to uninsured depositors and other general creditors of the closed bank equal to 40 percent of their uninsured claims.

In calling the meeting, the Board determined, on motion of Chairman L. William Seidman, seconded by Mr. Robert J. Herrmann, acting in the place and stead of Director Robert L. Clarke (Comptroller of the Currency), that Corporation business required its consideration of the matter on less than seven days' notice to the public; that no earlier notice of the meeting was practicable; that the public interest did not require consideration of the matter in a meeting open to public observation; and that the matter could be considered in a closed meeting pursuant to subsections (c)(8), (c)(9)(A)(ii), and (c)(9)(B) of the "Government in the Sunshine Act" (5 U.S.C. 552b(c)(9)(A)(ii), and (c)(9)(B)).

Dated: July 3, 1986.

Federal Deposit Insurance Corporation.

Margaret M. Olsen,

Deputy Executive Secretary.

[FR Doc. 86-15509 Filed 7-7-86; 11:05 am]

BILLIING CODE 6714-01-M

2

PACIFIC NORTHWEST ELECTRIC POWER AND CONSERVATION PLANNING COUNCIL

ACTION: Notice of meeting to be held pursuant to the Government in the Sunshine Act (5 U.S.C. 552b).

STATUS: Open. The Council also will hold an executive session to discuss pending litigation.

TIME AND DATE: July 9-10, 1986. 9:00 am.

PLACE: Cavanaugh's Inn at the Park, West 303 North River Drive, Spokane, Washington.

MATTERS TO BE CONSIDERED:

- Petition by Senator Al Williams, Charman, Washington State Senate Energy and Utilities Committee. Regarding the Cost-Effectiveness of Washington Public Power Supply System Plants 1 and 3
- Public Comment on Salmon and Steelhead Planning Paper
- Public Comment on Salmon and Steelhead Research Issue Paper
- Preliminary Council Action on Mainstem Applications to Amend Columbia River Fish and Wildlife Program

—Transportation
—Spill levels
—Water budget accounting
—Intertie access
—Joint mainstem planning
—Fish Passage Center/Water Budget Managers

- Staff Presentation on Draft Workplan for Western Energy Study
- Council Action on Council FY 87-88 Budget
- Council Business.

Public comments will follow each item.

FOR FURTHER INFORMATION CONTACT: Ms. Bess Atkins, (503) 222-5161, or toll-free 1-800-222-3355 (Montana, Idaho or Washington) or 1-800-452-2324 (Oregon).

Edward Sheets,

Executive Director.

[FR Doc. 86-15495 Filed 7-7-86; 9:45 am]

BILLING CODE 0000-00-M

3

FEDERAL RESERVE SYSTEM BOARD OF GOVERNORS

TIME AND DATE: 10:00 a.m., Friday, July 11, 1986.

PLACE: Marriner S. Eccles Federal Reserve Board Building, C Street entrance between 20th and 21st Streets, NW., Washington, DC 20551.

STATUS: Open.

MATTERS TO BE CONSIDERED:

1. Proposals regarding the treatment of perpetual debt and other non-common equity securities for capital adequacy purposes. (Proposed earlier for public comment; Docket No. R-0557)
2. Publication for comment of proposals implementing a tiered pricing structure for check collection services.
3. 1987 Federa Reserve Bank budget objective.
4. Any items carried forward from a previously announced meeting.

Note.—This meeting will be recorded for the benefit of those unable to attend. Cassettes will be available for listening in the Board's Freedom of Information Office, and copies may be ordered for $5 per cassette by calling (202) 452-3684 or by writing to: Freedom of Information Office, Board of Governors of the Federal Reserve System, Washington, DC 20551.

CONTACT PERSON FOR MORE INFORMATION: Mr. Joseph R. Coyne, Assistant to the Board; (202) 452-3204.

Dated: July 3, 1986.

James McAfee,

Associate Secretary of the Board.

[FR Doc. 86-15483 Filed 7-3-86; 4:28 pm]

BILLING CODE 6210-01-M

4

FEDERAL RESERVE SYSTEM BOARD OF GOVERNORS

TIME AND DATE: Approximately 11:30 a.m., Friday, July 11, 1986, following a recess at the conclusion of the open meeting.

PLACE: Marriner S. Eccles Federal Reserve Board Building, C Street entrance between 20th and 21st Streets, NW., Washington, DC 20551.

STATUS: Closed.

MATTERS TO BE CONSIDERED:

1. Personnel actions (appointments, promotions, assignments, reassignments, and salary actions) involving individual Federal Reserve System employees.
2. Any items carried forward from a previously announced meeting.

CONTACT PERSON FOR MORE INFORMATION: Mr. Joseph R. Coyne, Assistant to the Board; (202) 452-3204.

You may call (202) 452-3207, beginning at approximately 5 p.m. two business days before this meeting, for a recorded announcement of bank and bank holding company applications scheduled for the meeting.

Dated: July 3, 1986.

James McAfee,

Associate Secretary of the Board.

[FR Doc. 86-15484 Filed 7-3-86; 4:29 pm]

BILLING CODE 6210-01-M

5

FEDERAL RESERVE SYSTEM BOARD OF GOVERNORS

TIME AND DATE: 11:00 a.m., Monday, July 14, 1986.

PLACE: Marriner S. Eccles Federal Reserve Board Building, C Street entrance between 20th and 21st Streets, NW., Washington, DC 20551.

STATUS: Closed.

MATTERS TO BE CONSIDERED:

1. Personnel actions (appointments, promotions, assignments, reassignments, and salary actions) involving individual Federal Reserve System employees.
2. Any items carried forward from a previously announced meeting.

CONTACT PERSON FOR MORE INFORMATION: Mr. Joseph R. Coyne, Assistant to the Board; (202) 452-3204. You may call (202) 452-3207, beginning at approximately 5 p.m. two business days before this meeting, for a recorded announcement of bank and bank holding company applications scheduled for the meeting.

Dated: July 3, 1986.

James McAfee,

Associate Secretary of the Board

[FR Doc. 86-15485 Filed 7-3-86; 4:30 pm]

BILLING CODE 6210-01-M

6

NUCLEAR REGULATORY COMMISSION

DATE: Weeks of July 7, 14, 21, and 28, 1986.

PLACE: Commissioners' Conference Room, 1717 H Street, NW., Washington, DC.

STATUS: Open and Closed.

MATTERS TO BE CONSIDERED:

Week of July 7

Monday, July 7

2:00 p.m.
Discussion/Possible Vote on Fermi Restart (Public Meeting)

Wednesday, July 9

10:00 a.m.
Briefing on Accident Source Term Reassessment (NUREG-0956) (Public Meeting)

2:00 p.m.
Affirmation/Discussion and Vote (Public Meeting)
a. Emergency Planning—Medical Services

Week of July 14—Tentative

Tuesday, July 15

2:00 p.m.
Briefing by DOE on Status on High Level Waste Program (Public Meeting)

Thursday, July 17

3:30 p.m.
Affirmation Meeting (Public Meeting) (if needed)

Week of July 21—Tentative

Monday, July 21

10:00 a.m.
Discussion/Possible Vote on Full Power Operating License for Hope Creek (Public Meeting)

Wednesday, July 23

9:00 a.m.
Briefing on Status of EEO Program (Public Meeting)

2:00 p.m.
Briefing on Near Term Operating Licenses (NTOL's) (Open/Portion May be Closed—Ex. 5 & 7)

Thursday, July 24

2:00 p.m.
Briefing on Status of Davis-Besse (Public Meeting)

3:30 p.m.
Affirmation Meeting (Public Meeting) (if needed)

Week of July 28—Tentative

Wednesday, July 30

2:00 p.m.
Discussion of Management-Organization and Internal Personnel Matters (Closed—Ex. 2 & 6)

Thursday, July 31

10:00 a.m.
Discussion/Possible Vote on Full Power Operating License for Perry-1 (Public Meeting) (Tentative)

2:00 p.m.
Briefing on Engineering Research Program (Public Meeting)

3:30 p.m.
Affirmation Meeting (Public Meeting) (if needed)

ADDITIONAL INFORMATION: Discussion of Pending Investigations (Closed—Ex. 2, 5, 6, & 7) was held on July 2.

TO VERIFY THE STATUS OF MEETINGS CALL (RECORDING): (202) 634-1498.

CONTACT PERSON FOR MORE INFORMATION: Robert McOsker, (202) 634-1410.

Robert B. McOsker,

Office of the Secretary.

July 3, 1986.

[FR Doc. 86-15489 Filed 7-3-86; 4:52 pm]

BILLING CODE 7590-01-M

7

COMMISSION ON CIVIL RIGHTS

PLACE: 1121 Vermont Avenue, NW., Room 512, Washington, DC 20425.

DATE AND TIME: Friday, July 11, 1986, 9:00 a.m.-5:00 p.m.

STATUS OF MEETING: Open to the public.

MATTERS TO BE CONSIDERED:

I. Approval of Agenda
II. Approval of Minutes of Last Meeting
III. Staff Director's Report for June
  A. Status of Funds
  B. Personnel Report
  C. Office Directors' Reports
IV. Commission Appropriation for Fiscal Year 1987
V. Travel Regulation Changes
VI. Budget Material for Fiscal Year 1988
VII. Report on Economic Status of Southern and Eastern Europeans
VIII. Alabama SAC Report: Police/Community Relations in Montgomery
IX. Civil Rights Developments in the New England Region

FOR FURTHER INFORMATION PLEASE CONTACT: Barbara Brooks, Press and Communications Division (202) 376-8314.

William H. Gillers,

Solicitor (376-8339).

[FR Doc. 86-15486 Filed 7-3-86; 4:41 pm]

BILLING CODE 6335-01-M

federal register

Wednesday
July 9, 1986

Part II

Department of Defense
General Services Administration
National Aeronautics and Space Administration

48 CFR Part 30

Federal Acquisition Regulation (FAR); Cost Accounting Standards; Proposed Rule

DEPARTMENT OF DEFENSE

GENERAL SERVICES ADMINISTRATION

NATIONAL AERONAUTICS AND SPACE ADMINISTRATION

48 CFR Part 30

Federal Acquisition Regulation (FAR); Cost Accounting Standards

AGENCIES: Department of Defense (DoD), General Services Administration (GSA), and National Aeronautics and Space Administration (NASA).

ACTION: Proposed rule.

SUMMARY: The Civilian Agency Acquisition Council and the Defense Acquisition Regulatory Council are considering changes to Federal Acquisition Regulation (FAR) 30.404-40(b)(1), 30.404-60(a)(1), and 30.404-60(a)(1)(i) which will increase the minimum acquisition cost criterion for capitalization purposes from $1,000 to $1,500.

DATE: Comments should be submitted to the FAR Secretariat at the address shown below on or before September 8, 1986, to be considered in the formulation of a final rule.

ADDRESS: Interested parties should submit written comments to: General Services Administration, FAR Secretariat (VRS), 18th & F Streets NW, Room 4041, Washington, DC 20405.

Please cite FAR Case 86-35 in all correspondence related to this issue.

FOR FURTHER INFORMATION CONTACT: Ms. Margaret A. Willis, FAR Secretariat, Telephone (202) 523-4755.

SUPPLEMENTARY INFORMATION:

A. Background

The Cost Accounting Standards (CAS) are being proposed for incorporation into the FAR under FAR Case 86-31. This proposal represents the second proposed revision to the standards originally promulgated by the Cost Accounting Standards Board. The revision being proposed in this notice will not be implemented until the revision proposed under FAR Case 86-31 (51 FR 20238, June 3, 1986) are adopted in a final rule.

FAR 30.404-40(b)(1) provides that a contractor's capitalization policy shall designate a minimum service life criterion, which shall not exceed two years, and a minimum acquisition cost criterion, which shall not exceed $1,000. The proposed rule increases the minimum acquisition cost criterion from $1,000 to $1,500 due to the impact of inflation. The purpose of the change is to only require capitalization of those assets that are of significant value.

B. Regulatory Flexibility Act

The proposed revisions to FAR 30.404(b)(1), 30.404-60(a)(1), and 30.404-60(a)(1)(i) will not have a significant economic impact on a substantial number of small entities under the Regulatory Flexibility Act (5 U.S.C. 601, et seq.) because the changes cover Cost Accounting Standards from which small business concerns are exempt.

C. Paperwork Reduction Act

The proposed revisions to FAR 30.404(b)(1), 30.404-60(a)(1), and 30.404-60(a)(1)(i) increase the minimum acquisition cost criterion for capitalization purposes from $1,000 to $1,500. The rule does not change or otherwise affect the collection of information by Federal agencies from offerors, contractors, or members of the public.

List of Subjects in 48 CFR Part 30

Government procurement.

Dated: June 30, 1986.

Lawrence J. Rizzi,

Director, Office of Federal Acquisition and Regulatory Policy.

PART 30—COST ACCOUNTING STANDARDS

Therefore, it is proposed that 48 CFR Part 30 be amended as set forth below:

1. The authority citation for Part 30 continues to read as follows:

Authority: 40 U.S.C. 486(c); 10 U.S.C. Chapter 137; and 42 U.S.C. 2453(c).

2. Section 30.404-40 is amended by revising paragraph (b)(1) to read as follows:

30.404-40 Fundamental requirement.

* * * * *

(b) * * *

(1) The contractor's policy shall designate a minimum service life criterion, which shall not exceed two years, but which may be a shorter period. The policy shall also designate a minimum acquisition cost criterion which shall not exceed $1,500, but which may be a smaller amount.

* * * * *

3. Section 30.404-60 is amended by revising paragraphs (a)(1) and (a)(1)(i) to read as follows:

30.404-60 Illustrations.

(a) * * * (1) Contractor has an established policy of capitalizing tangible assets which have a service life of more than one year and a cost of $2,000. The contractor's policy must be modified to conform to the $1,500 policy limitation on minimum acquisition cost established by the Standard.

(i) Contractor acquires a tangible capital asset with a life of 18 months at a cost of $1,700. The Standard requires that the asset be capitalized in compliance with the contractor's policy as to service life.

* * * * *

[FR Doc. 86-15229 Filed 7-8-86; 8:45 am]

BILLING CODE 6820-61-M

federal register

Wednesday
July 9, 1986

Part III

Environmental Protection Agency

40 CFR Parts 405 et al.

Best Conventional Pollutant Control Technology; Effluent Limitations Guidelines; Final Rule

ENVIRONMENTAL PROTECTION AGENCY

40 CFR Parts 405, 406, 407, 408, 409, 411, 412, 418, 422, 424, 426, and 432

[FRL 2941-9]

Best Conventional Pollutant Control Technology; Effluent Limitations Guidelines

AGENCY: Environmental Protection Agency (EPA).

ACTION: Final rule.

SUMMARY: This regulation establishes effluent limitations guidelines based on the application of the best conventional pollutant control technology (BCT) for the discharge of conventional pollutants into navigable waters by certain industrial dischargers and also establishes the Agency's general methodology for determining the reasonableness of costs for these, subsequent BCT effluent limitations guidelines, and case by case determinations of BCT effluent limitations in discharge permits under section 402(a)(1) of the Clean Water Act. This action responds to a judicial remand of a final regulation promulgated in August 1979. The effect of this action is to codify BCT effluent limitations guidelines for dischargers in the following industries: Dairy Products Processing, Grain Mills, Fruits and Vegetables Processing, Seafood Processing, Sugar Processing, Cement Manufacturing, Phosphate Manufacturing, Ferroalloy Manufacturing, Glass Manufacturing, and Meat Products.

DATES: This regulation becomes effective August 22, 1986. In accordance with 40 CFR 23 (50 FR 7268), this regulation shall be considered issued for purposes of judicial review at 1:00 p.m. Eastern time on July 23, 1986. Under section 509(b)(2) of the Clean Water Act, judicial review of these regulations and the BCT methodology published today can be made only by filing a petition for review in the United States Court of Appeals within 90 days after the regulation is considered issued for purposes of judicial review. Under section 509(b)(2) of the Clean Water Act, the requirements in this regulation may not be challenged later in civil or criminal proceedings brought by EPA to enforce these requirements. Application of the BCT methodology can be challenged in a subsequent rulemaking and in any case-by-case determinations in permit proceedings.

ADDRESSES: The Record for the final rule is available for public inspection in EPA's Public Information Reference Unit, located in the EPA Library, Room 2404, 401 M Street, SW., Washington, DC. The EPA public information regulation (40 CFR Part 2) provides that a reasonable fee may be charged for copying.

FOR FURTHER INFORMATION CONTACT: Ms. Debra Maness, (202) 382-5385.

SUPPLEMENTARY INFORMATION:

Organization of This Notice

I. Background

A. Definition and Legal Basis.
B. Previous Regulations.

II. Summary of Final Rulemaking

A. Application of BCT Methodology.
B. Industrial Categories Affected and Summary of Their Results.

III. Development of BCT Methodology and Benchmarks

A. POTW Test.
B. Industry Cost Test.
C. POTW Cost Data.
D. POTW Performance Data.
E. Benchmark Calculations.

IV. Status of Proposed BCT Effluent Limitations Guidelines for Primary Industries

A. Introduction.
B. Primary Industry Discussions.

V. BCT Effluent Limitations Guidelines for Secondary Industries

A. Introduction.
B. Rationale for Establishing BCT Effluent Limitations and Changes Since Proposal.

VI. Anti-Backsliding

VII. Availability of Fundamentally Different Factors Variances

VIII. Regulatory Analysis Requirements

A. Regulatory Flexibility Analysis.
B. Regulatory Impact Analysis.

IX. Response to Major Comments

X. Availability of Technical Information

XI. OMB Review.

I. Background

A. Definition and Legal Basis

In 1977, Congress amended the Clean Water Act to include section 304(b)(4), which instructs EPA to establish effluent limitations guidelines based on the application of the "best conventional pollutant control technology" (BCT) for existing industrial point sources that discharge conventional pollutants. The BCT effluent limitations guidelines are not additional guidelines, but instead, replace guidelines based on the application of the "best available technology economically achievable" (BAT) for the control of conventional pollutants. BAT effluent limitations guidelines remain in effect for nonconventional and toxic pollutants. Effluent limitations based on BCT may not be less stringent than the limitations based on "best practicable control technology currently available" (BPT). Thus, BPT effluent limitations guidelines are a "floor" below which BCT effluent limitations guidelines cannot be established.

Section 304(b)(4)(B) adds an additional evaluation to the effluent limitations guidelines process for conventional pollutants. In addition to the Clean Water Act requirement that effluent limitations guidelines be economically achievable, the cost associated with the BCT effluent limitations guidelines must also be "reasonable" in relation to the effluent pollutant reductions. The evaluation concerning the reasonableness of BCT also applies to effluent limitations in permits prepared under the National Pollutant Discharge Elimination System according to best professional judgment (BPJ). Thus, throughout this preamble, the use of the term "effluent limitations" means effluent limitations guidelines for industrial categories and effluent limitations established on a case by case basis in permits. The Agency will also prepare permit-writing guidance on the subject of BCT effluent limitations.

In establishing BCT effluent limitations, section 304(b)(4)(B) states that EPA must consider

> . . . the reasonableness of the relationship between the costs of attaining a reduction in effluents and the effluent reduction benefits derived, and the comparison of the cost and level of reduction of such pollutants from the discharge from publicly owned treatment works to the cost and level of reduction of such pollutants from a class or category of industrial sources . . .

The procedure EPA uses to account for these factors is known as the BCT methodology. Stated intuitively, the BCT methodology answers the question of whether it is "cost-reasonable" for industry to control conventional pollutants at a level more stringent than BPT effluent limitations already require. The Act also specifies that in establishing BCT effluent limitations, consideration be given to the age of equipment, production processes, energy requirements, and other appropriate factors.

In developing the BCT methodology, EPA has been guided both by the statutory language of section 304(b)(4)(B) and by Congress' underlying objectives as expressed in the legislative history of the Clean Water Act. Congress was concerned that the controls for conventional pollutants at levels more stringent than BPT were likely to be unreasonably expensive in

some cases. Accordingly, Congress required that a "cost-reasonableness" comparison be applied before establishing BCT effluent limitations guidelines at a level more stringent than BPT effluent limitations guidelines. The final BCT methodology contained in this regulation satisfies those objectives and, thus, is consistent with the statute and with Congressional intent.

Section 304(a)(4) of the Act specifies the pollutants that are classified as conventional. This section designated the following pollutants as conventional: biochemical oxygen demand (reported as five-day biochemical oxygen demand or BOD_5 and hereafter shown as BOD), total suspended solids (TSS), fecal coliform, and pH. The Administrator designated oil and grease as conventional on July 30, 1979 (44 FR 44501). If pollutants are subsequently added or deleted from the conventional pollutant list, the Agency would then reevaluate all effluent limitations guidelines affected by such revisions.

B. Previous Regulations

Section 73 of the Clean Water Act of 1977 (Pub. L. 95–217) directed EPA to review then existing BAT effluent limitations guidelines for conventional pollutants to determine their suitability as BCT effluent limitations guidelines. The review was intended to cover all industries although the time deadlines for the review were different for different industries. The industries on the list in Table 2 of Congressional Committee Print 95–30 from the Committee on Public Works and Transportation ("Data Relating to H.R. 3199 (Clean Water Act of 1977), November 1977) became known as the primary industries. The industries not included on that list became known as the secondary industries.

On August 29, 1979, EPA published a BCT methodology and promulgated BCT effluent limitations guidelines for 41 subcategories of the secondary industries (44 FR 50732). The focus of the August 1979 rule was the review of existing BAT effluent limitations guidelines for the secondary industries to determine if they satisfied the criteria in section 304(b)(4)(B) for cost-reasonableness. The core of the methodology was a comparison of the costs of removing additional pounds of conventional pollutants for industry to the costs of removing conventional pollutants for an average-sized publicly owned treatment works (POTW).

The cost comparison figure for the POTW constituted the basic measure of "reasonableness," and the BCT test compared this POTW cost to the cost for industry to remove one pound of conventional pollutants. This BCT test was applied to existing BAT effluent limitations guidelines for conventional pollutants. If the industry cost was lower than the POTW cost, the test was "passed"; that is, the BAT level of control was considered reasonable, and the existing BAT effluent limitations guidelines for conventional pollutants were redesignated as BCT effluent limitations guidelines. If the industry cost was higher than the POTW cost, the test was "failed" and BCT guidelines were not set equivalent to the BAT level. Instead, the existing BAT guidelines for conventional pollutants were withdrawn until appropriate BCT guidelines could be established.

The 1979 regulation was challenged in the U.S. Court of Appeals for the Fourth Circuit, and on July 28, 1981, the Court issued its decision. *American Paper Institute v. EPA*, 660 F 2d 954 (4th Cir. 1981). While upholding the methodology that EPA had developed for the POTW cost comparison test, the Court remanded the regulation to the Agency for two reasons. First, the Court held that the Clean Water Act requires EPA to consider two tests of "reasonableness" as part of the BCT methodology: a POTW cost-comparison test and an industry cost-effectiveness test. Since the 1979 methodology contained only the POTW cost test, the Court directed EPA to develop a separate industry cost-effectiveness test. Second, the Court also remanded the regulation for EPA to correct certain statistical errors that had been made in calculating the POTW test.

As a result of the remand, EPA withdrew many of the BCT effluent limitations guidelines for secondary industries that were promulgated in 1979, and also withdrew BCT effluent limitations guidelines for the Timber Products Processing Point Source Category, which were based on the same methodology (47 FR 6835, February 17, 1982).

On October 29, 1982, EPA proposed a revised BCT methodology (47 FR 49176), responding to the Court's remand by presenting an industry cost-effectiveness test (the "second" test) and by correcting the statistical errors in the prior calculations for the POTW test. The proposal also encompassed the Agency's general re-evaluation of the BCT methodology, conducted in response to a directive from a Presidential Task Force on Regulatory Relief. Based on that review, EPA determined that the POTW cost test promulgated in 1979 and upheld by the Court of Appeals was still the preferred approach, but added an industry cost-effectiveness test. These two tests continue to be the basis for the final methodology and are described in detail later in this preamble (see Section III).

In the same proposal, EPA published proposed BCT effluent limitations guidelines for the secondary industries, based on the revised methodology. The proposal also addressed some of the primary industries by reproposing existing regulations or replacing withdrawn regulations, as appropriate. In summary, the October 1982 proposal brought all existing BCT regulations into conformance with the revised methodology.

Subsequent to the October 1982 proposal, the Agency issued a notice of availability concerning new cost information on POTWs (48 FR 24742, June 2, 1983). The new data was of the same form as the cost data used in the October 1982 proposal, but it was more current. The Agency believed the new cost data to be the most current information to use in calculating the BCT benchmarks. However, on September 16, 1983, the Agency withdrew the June 1983 notice pending further evaluation of whether the new data were appropriate for use in the BCT methodology (48 FR 44091). During the re-evaluation, the Agency concluded that the data used both at proposal in October 1982 and in the June 1983 notice were unsuitable for the BCT methodology. EPA concluded that it was necessary to use a different source of information for POTW costs. The new approach was to develop POTW model plant costs specifically for the BCT methodology. The model POTW approach and costs were detailed in a notice of data availability on September 20, 1984 (49 FR 37046); the notice also alerted the public to several other possible changes in the BCT methodology.

The Agency received extensive comments on the October 1982 proposal and subsequent, related notices. Some of the major comments are discussed later in this Preamble (see Section IX), and all comments are addressed in the record for this final regulation.

Today's final regulation is the culmination of the notice and comment process. The remainder of this preamble defines the final methodology, describes its development, and presents the results from applying the methodology. Table 1, which is explained in the next section (under Heading II.B), is a summary of the results for 13 industries. The regulations promulgated today establish final BCT effluent limitations guidelines for some of the secondary industries. The BCT methodology described herein will also generally

apply to the primary industries, although final BCT effluent limitations for the primary industries will be published in future rulemakings. EPA also expects to apply today's BCT methodology in all subsequent rulemakings and permit proceedings and so considers the BCT methodology as described in this **Federal Register** notice final for purposes of judicial review. Application of this methodology can be challenged in subsequent rulemakings and BPJ permit proceedings.

II. Summary of Final Rulemaking

A. Application of BCT Methodology

1. Candidate Technologies

Establishing BCT effluent limitations for an industrial category or subcategory begins by identifying technology options that provide additional conventional pollutant control beyond the level of control provided by the application of BPT effluent limitations. Any such "candidate technologies" are then evaluated to determine if they are technologically feasible and economically achievable. The candidate technology must meet these requirements to be considered as a basis for BCT effluent limitations. EPA then evaluates candidate technologies by applying the BCT cost test, which consists of two parts: the POTW test and the industry cost-effectiveness test.

2. POTW Test

To "pass" the POTW test, the cost per pound of conventional pollutant removed by industrial dischargers in upgrading from BPT to the candidate BCT must be less than the cost per pound of conventional pollutant removed in upgrading POTWs from secondary treatment to advanced secondary treatment. The upgrade cost to industry must be less than the POTW benchmark of $0.25 per pound (in 1976 dollars) for industries whose cost per pound is based on long-term performance data (first tier POTW benchmark), or less than $0.14 per pound for industries whose cost per pound is not based on long-term performance data (second tier POTW benchmark).

While the preferred approach for applying the BCT methodology is to calculate the cost per pound with long-term performance data, these data are not uniformly available for most of the secondary industries. The costs per pound for industries without long-term performance data are derived from the maximum 30-day limitations that were originally based on the application of BAT, prior to the requirement that the Agency establish BCT effluent limitations guidelines. Therefore, for purposes of applying the BCT methodology to the industries with this data constraint, a second tier of benchmarks was calculated using the same type of data as is available for the industries without long-term performance data (i.e., 30-day data).

As discussed in Section I, the conventional pollutants are BOD, TSS, oil and grease, fecal coliform, and pH. The pollutants included in calculating the POTW pollutant removal are BOD and TSS. These pollutants are also used to calculate the pollutant removal for a candidate BCT, but oil and grease may be included when appropriate in the context of the industry and technology being evaluated. Fecal coliform and pH are not included in the calculations because control of these pollutants is not measureable as "pounds removed." An acceptable interval for controlling pH is evaluated with respect to the particular processes of a candidate technology. Generally, the acceptable pH interval for BCT will be the same as that for BPT. Maintaining the acceptable interval is an inherent cost of the BCT technology and must be economically achievable and cost-reasonable.

3. Industry Cost-Effectiveness Test

Candidate technologies must also "pass" the industry cost-effectiveness test. For each industry subcategory, EPA computes a ratio of two incremental costs. The first is the cost per pound removed by the BCT candidate technology relative to BPT; the second is the cost per pound removed by BPT relative to no treatment (i.e., the second cost compares raw wasteload to pollutant load after application of BPT).

The ratio of the first cost divided by the second is a measure of the candidate technology's cost-effectiveness. The ratio is compared to an industry cost benchmark, which again is based on POTW cost and pollutant removal data. The benchmark, like the measure for a candidate technology, is a ratio of two incremental costs: the cost per pound to upgrade a POTW from secondary treatment to advanced secondary treatment is divided by the cost per pound to initially achieve secondary treatment from raw wasteload. If the industry ratio is lower than the benchmark, the candidate technology passes the industry cost test. The benchmark for industries whose ratio is based on long-term performance data is 1.29. The second tier benchmark for industries whose ratio is not based on long-term performance data is 0.68.

In calculating this ratio, EPA will consider any BCT cost per pound less than $0.01 to be the equivalent of *de minimis* or zero costs. There are cases in today's rulemaking where the numerator of the industry cost ratio and therefore the entire ratio are taken to be zero. EPA believes any *de minimis* cost per pound for a candidate BCT technology meets Congressional intent concerning the concept of reasonableness for purposes of the second test.

4. BCT Determination

EPA will evaluate both the POTW test and the industry cost-effectiveness test as measures of reasonableness. The most stringent technology option that "passes" these tests provides the basis for setting BCT effluent limitations. Generally, if all candidate technologies fail any of the tests, or if no candidate technologies more stringent than BPT are identified, then BCT effluent limitations are established at a level equal to BPT effluent limitations.

There may be instances where, because of a lack of comparable industry data, a strict comparison to the benchmarks developed in this rulemaking would undermine Congressional intent on cost-reasonableness. In such instances, EPA will develop appropriate procedures to evaluate cost-reasonableness on an industry-specific basis. Additionally, section 304(b)(4)(B) instructs the Agency to consider "other factors deemed appropriate" when making determinations about BCT. Again, EPA will support such evaluations on an industry-specific basis.

B. Industrial Categories Affected and Summary of Their Results

This final regulation identifies the methodology EPA uses to establish BCT effluent limitations, pursuant to the provisions of section 304(b)(4)(B) of the Clean Water Act. This methodology is used in today's rulemaking to establish BCT effluent limitations for many of the secondary industries. For some of the primary industries, BCT effluent limitations have already been proposed; for others, they have been deferred. While BCT effluent limitations for primary industries will be promulgated in separate rulemaking notices, the methodology used to determine the reasonableness of those limitations will be the same as described in today's final rule.

Due to the extensive regulatory activity (proposal, promulgation, withdrawal, and reproposal) and the time span affecting BCT effluent limitations for the secondary industries, all subcategories for the secondary industries are reviewed here. Table 1 summarizes the results of this review.

The third column of Table 1 describes the status of BCT effluent limitations prior to today's rulemaking. The fourth column indicates whether the existing status is affected by this rulemaking and shows the final outcome. The final column presents the rationale for the final determination.

The results indicate that establishing BCT effluent limitations at a level of control more stringent than BPT effluent limitations is reasonable for seven subcategories. Four subcategories are in the Canned and Preserved Seafood Processing category: Pacific Coast Hand-Shucked Oyster, Atlantic and Gulf Coast Hand-Shucked Oyster, Non-Alaskan Scallop, and Abalone Processing; two are in the Meat Products category: Small Processors and Renderers; and one is in the Phosphate Manufacturing category: Sodium Phosphates. The Agency estimates that the additional treatment associated with the more stringent limitations for these subcategories will result in minimal incremental costs. For the remaining subcategories where BCT effluent limitations are established equal to the BPT effluent limitations, there is no incremental cost beyond BPT.

TABLE 1.—SUMMARY OF BCT METHODOLOGY RESULTS AND BCT EFFLUENT LIMITATIONS GUIDELINES FOR SECONDARY INDUSTRIES

Industry and subpart	CFR part	Prior status of BCT effluent limitations	Outcome of today's rulemaking	Basis of determination [1]
DAIRY PRODUCTS PROCESSING				
A—Receiving stations	405.17	No limitations	Establish BCT=BPT for BOD, TSS, pH	Fail BCT methodology, reason No. 3
B—Fluid products	405.27	do	do	Do.
C—Cultured products	405.37	do	do	Do.
D—Butter	405.47	do	do	Do.
E—Cottage cheese and cultured cream cheese	405.57	do	do	Do.
F—Natural and processed cheese	405.67	do	do	Do.
G—Fluid mix for ice cream and other frozen desserts	405.77	do	do	Do.
H—Ice cream, frozen desserts, novelties and other dairy desserts.	405.87	do	do	Do.
I—Condensed milk	405.97	do	do	Do.
J—Dry milk	405.107	do	do	Do.
K—Condensed whey	405.117	BCT=BPT for pH	No change for pH. Establish BCT=BPT for BOD, TSS.	Do.
L—Dry whey	405.127	No limitations	Establish BCT=BPT for BOD, TSS, pH	Do.
GRAIN MILLS				
A—Corn wet milling	406.17	Limitations suspended	No change to prior status	Technology under review.
B—Corn dry milling	406.27	No limitations	Establish BCT=BPT for BOD, TSS, pH	Fail BCT methodology, reason No. 3
C—Normal wheat flour milling	406.37	BCT=BPT, zero discharge.	No change to prior status	No candidate technology.
D—Bulgur wheat flour milling	406.47	BCT=BPT for pH	No change for pH. Establish BCT=BPT for BOD, TSS.	Fail BCT methodology, reason No. 3
E—Normal rice milling	406.57	BCT=BPT, zero discharge.	No change to prior status	No candidate technology.
F—Parboiled rice processing	406.67	No limitations	Establish BCT=BPT for BOD, TSS, pH	Fail BCT methodology, reason No. 3
G—Animal feed	406.77	BCT=BPT, zero discharge.	No change to prior status	No candidate technology.
H—Hot cereal	406.87	do	do	Do.
I—Ready-to-eat-cereal	406.97	No limitations	Establish BCT=BPT for BOD, TSS, pH	Fail BCT methodology, reason No. 3
J—Wheat starch and gluten	406.107	do	do	Do.
CANNED AND PRESERVED FRUITS AND VEGETABLES PROCESSING				
A—Apple juice	407.17	BCT=BPT for pH	No change for pH. Establish BCT=BPT for BOD, TSS.	Do.
B—Apple products	407.27	do	do	Do.
C—Citrus products	407.37	No limitations	Establish BCT=BPT for BOD, TSS, pH	Do.
D—Frozen potato products	407.47	BCT=BPT for pH	No change for pH. Establish BCT=BPT for BOD, TSS.	Do.
E—Dehydrated potato products	407.57	No limitations	Establish BCT=BPT for BOD, TSS, pH	Do.
F—Canned and preserved fruits	407.67	do	do	Do.
G—Canned and preserved vegetables	407.77	do	do	Do.
H—Canned and miscellaneous specialties	407.87	do	do	Do.
CANNED AND PRESERVED SEAFOOD PROCESSING				
A—Farm-raised catfish processing	408.17	do	Establish BCT=BPT for TSS, oil and grease, pH.	Do.
B—Conventional blue crab processing	408.27	do	do	Fail BCT methodology, reason No. 1
C—Mechanized blue crab processing	408.37	do	do	Do.
D—Non-remote Alaskan crab meat processing	408.47	do	do	Do.
E—Remote Alaskan crab meat processing	408.57	do	Establish BCT=BPT	Do.
F—Non-remote Alaskan whole crab and crab section processing.	408.67	do	Establish BCT=BPT for TSS, oil and grease, pH.	Do.
G—Remote Alaskan whole crab and crab section processing.	408.77	do	Establish BCT=BPT	Do.
H—Dungeness and Tanner crab processing in the contiguous States.	408.87	do	Establish BCT=BPT for TSS, oil and grease, pH.	Do.
I—Non-remote Alaskan shrimp processing	408.97	do	do	Do.
J—Remote Alaskan shrimp processing	408.107	do	Establish BCT=BPT	Do.
K—Northern shrimp processing in the contiguous States	408.117	do	Establish BCT=BPT for TSS, oil and grease, pH.	Do.
L—Southern non-breaded shrimp processing in the contiguous States.	408.127	do	do	Do.
M—Breaded shrimp processing in the contiguous States	408.137	do	do	Do.
N—Tuna processing	408.147	do	do	Do.
O—Fish meal processing	408.157	do	Establish BCT=BPT for BOD, TSS, oil and grease, pH.	Fail BCT methodology, reason No. 2
P—Alaskan hand-butchered salmon processing	408.167			
—Non-remote		do	Reserve section	Technology under review.
—Remote		do	Establish BCT=BPT	Fail BCT methodology, reason No. 1.
Q—Alaskan mechanized salmon processing	408.177			
—Non-remote		do	Establish BCT=BPT for TSS, oil and grease, pH.	Do.

TABLE 1.—SUMMARY OF BCT METHODOLOGY RESULTS AND BCT EFFLUENT LIMITATIONS GUIDELINES FOR SECONDARY INDUSTRIES—Continued

Industry and subpart	CFR part	Prior status of BCT effluent limitations	Outcome of today's rulemaking	Basis of determination [1]
—Remote		do	Establish BAT = BPT	Do.
R—West coast hand-butchered salmon processing	408.187	do	Establish BCT=BPT for TSS, oil and grease, pH.	Do.
S—West coast mechanized salmon processing	408.197	do	do	Do.
T—Alaskan bottom fish processing	408.207			
—Non-remote		do	Reserve section	Technology under review.
—Remote		do	Establish BCT=BPT	Fail BCT methodology, reason No. 1
U—Non-Alaskan conventional bottom fish processing	408.217	do	Establish BCT=BPT for TSS, oil and grease, pH.	Do.
V—Non-Alaskan mechanized bottom fish processing	408.227	do	do	Do.
W—Hand-shucked clam processing	408.237	do	do	Fail BCT methodology, reason No. 2.
X—Mechanized clam processing	408.247	do	do	Fail BCT methodology, reason No 1
Y—Pacific coast hand-shucked oyster processing	408.257	do	Establish BCT=BPT for pH and BCT more stringent than BPT for TSS, oil and grease.	Pass BCT methodology.
Z—Atlantic and Gulf Coast hand-shucked oyster processing	408.267	do	do	Do.
AA—Steamed and canned oyster processing	408.277	do	Establish BCT=BPT for TSS, oil and grease, pH.	Fail BCT methodology, reason No. 1
AB—Sardine processing	408.287	do	do	Do.
AC—Alaskan scallop processing	408.297			
—Nonremote		do	Reserve section	Technology under review.
—Remote		do	Establish BCT=BPT	Fail BCT methodology, reason No. 1
AD—Non-Alaskan scallop processing	408.307	do	Establish BCT=BPT for pH and BCT more stringent that BPT for TSS, oil and grease.	Pass BCT methodology.
AE—Alaskan herring fillet processing	408.317			
—Non-remote		do	Establish BCT=BPT for TSS, oil and grease, pH.	Fail BCT methodology, reason No. 1.
—Remote		do	Establish BCT=BPT	Do.
AF—Non-Alaskan herring fillet processing	408.327	do	Establish BCT=BPT for TSS, oil and grease, pH.	Do.
AG—Abalone processing	408.337	do	Establish BCT=BPT for pH and BCT more stringent than BPT for TSS, oil and grease.	Pass BCT methodology.
SUGAR PROCESSING				
A—Beet sugar processing	409.17	BCT=BPT for pH	No change for pH. Establish BCT=BPT for BOD, TSS, fecal coliform.	Fail BCT methodology, reason No. 3.
B—Crystalline cane sugar refining	409.27	do	No change for pH. Establish BCT=BPT	Do.
C—Liquid cane sugar refining	409.37	do	No change for pH. Establish BCT=BPT for BOD, TSS.	Do.
D—Louisiana raw cane sugar processing	409.47	No limitations	Establish BCT=BPT for BOD, TSS, pH	Do.
E—Florida and Texas raw cane sugar processing	409.57	do	Establish BCT=BPT	No candidate technology.
F—Hilo-Hamakua Coast of the Island of Hawaii raw cane sugar processing.	409.67	do	Establish BCT=BPT for BOD, TSS, pH	Fail BCT methodology, reason No. 3.
G—Hawaiian raw cane sugar processing subcategory	409.77	do	Establish BCT=BPT	No candidate technology.
H—Puerto Rican raw cane sugar processing	409.87	do	Establish BCT=BPT for BOD, TSS, pH	Fail BCT methodology, reason No. 3.
CEMENT MANUFACTURING				
A—Nonleaching	411.17	BCT=BPT pH, TSS	No change to prior status	No candidate technology.
B—Leaching	411.27	BCT=BPT for pH	No change for pH. Establish BCT=BPT for TSS.	Fail BCT methodology, reason No. 3.
C—Materials storage piles runoff	411.37	BCT=BPT for pH, TSS	No change to prior status	No candidate technology.
FEEDLOTS				
A—All subcategories except ducks	412.17	BCT=BAT	Reserve section	Technology under review.
B—Ducks	No section	No limitations	No change to prior status	Do.
FERTILIZER MANUFACTURING				
A—Phosphate	418.17	BCT=BPT for TSS	do	No candidate technology.[2]
B—Ammonia	418.27	BCT=BPT for pH	do	Do.
C—Urea	No section	No limitations	do	No control of conventional pollutant discharges.
D—Ammonium nitrate	do	do	do	Do.
E—Nitric acid	do	do	do	Do.
F—Ammonium sulfate production	418.67	BCT=BPT	do	No candidate technology.
G—Mixed and blended fertilizer production	418.77	do	do	Do.
PHOSPHATE MANUFACTURING				
A—Phosphorus production	No section	No limitations	do	No control of conventional pollutant discharges.
B—Phosphorus consuming	do	do	do	Do.
C—Phosphate	do	do	do	Do.
D—Defluorinated phosphate rock	422.47	BCT=BPT for TSS, pH	do	No candidate technology.
E—Defluorinated phosphoric acid	422.57	do	do	Do.

TABLE 1.—SUMMARY OF BCT METHODOLOGY RESULTS AND BCT EFFLUENT LIMITATIONS GUIDELINES FOR SECONDARY INDUSTRIES—Continued

Industry and subpart	CFR part	Prior status of BCT effluent limitations	Outcome of today's rulemaking	Basis of determination [1]
F—Sodium phosphates	422.67	No limitations	Establish BCT=BPT for pH and BCT more stringent than BPT for TSS.	Pass BCT methodology.
FERROALLOY MANUFACTURING				
A—Open electric furnaces with wet air pollution control devices.	424.17	do	Establish BCT=BPT for TSS, pH	Fail BCT methodology, reason No. 3.
B—Covered electric furnaces and other smelting operations with wet air pollution control devices.	424.27	do	do	Do.
C—Slag processing	424.37	do	do	Do.
D—Covered calcium carbide furnaces with wet air pollution control devices.	424.47	BCT=BPT for pH	No change for pH. Establish BCT=BPT for TSS.	Do.
E—Other calcium carbide furnaces	424.57	BCT=BPT	No change to prior status	No candidate technology.
F—Electrolytic manganese products	424.67	BCT=BPT for pH	No change for pH. Establish BCT=BPT for TSS.	Fail BCT methodology, reason No. 3.
G—Electrolytic chromium	424.77	do	do	Do.
GLASS MANUFACTURING				
A—Insulation fiberglass	426.17	No limitations	Establish BCT=BPT for BOD, TSS, pH	Do.
B—Sheet glass manufacturing	426.27	BCT=BPT	No change to prior status	No candidate technology.
C—Rolled glass manufacturing	426.37	do	do	Do.
D—Plate glass manufacturing	426.47	No limitations	Establish BCT=BPT for TSS, pH	Fail BCT methodology, reason No. 3.
E—Float glass manufacturing	426.57	BCT=BPT for pH	No change for pH. Establish BCT=BPT for TSS, oil.	Do.
F—Automotive glass tempering	426.67	do	do	Do.
G—Automotive glass laminating	426.77	do	do	Do.
H—Glass container manufacturing	426.87	do	do	Do.
I—Machine pressed and blown glass manufacturing	No section	No limitations	No change to prior status	No control of conventional pollutant discharges.
J—Glass tubing (Danner) manufacturing	426.107	BCT=BPT for pH	No change for pH. Establish BCT=BPT for TSS.	Fail BCT methodology, reason No. 3.
K—Television picture tube envelope manufacturing	426.117	do	No change for pH. Establish BCT=BPT for TSS, oil.	Do.
L—Incandescent lamp envelope manufacturing	426.127	do	do	Do.
M—Hand pressed and blown glass manufacturing	426.137	BCT set for pH	Reserve section	Technology under review.
ASBESTOS MANUFACTURING				
A—Asbestos-cement pipe	No section	No limitations	No change to prior status	Do.
B—Asbestos-cement sheet	do	do	do	Do.
C—Asbestos paper (starch binder)	do	do	do	Do.
D—Asbestos paper (elastomeric binder)	do	do	do	Do.
E—Asbestos millboard	do	do	do	Do.
F—Asbestos roofing	do	do	do	Do.
G—Asbestos floor tile	do	do	do	Do.
H—Coating or finishing of asbestos textiles	do	do	do	Do.
I—Solvent recovery	427.97	BCT=BCT for TSS, pH	do	No candidate technology.
J—Vapor absorption	No section	No limitations	do	Technology under review.
K—Wet dust collection	do	do	do	Do.
MEAT PRODUCTS				
A—Simple slaughterhouse	432.17	BCT=BPT for fecal coliform, pH in some processes.	Establish BCT=BPT for BOD, TSS, oil and grease, fecal coliform, pH as limited in each process.	Fail BCT methodology, reason No. 1.
B—Complex slaughterhouse	432.27	do	do	Do.
C—Low-processing packinghouse	432.37	do	do	Do.
D—High-processing packinghouse	432.47	do	do	Do.
E—Small processor	432.57	No limitations	Establish BCT more stringent than BPT for BOD, TSS, oil and grease, pH, fecal coliforms.	Pass BCT methodology.
F—Meat cutter	432.67	BCT=BPT for fecal coliform, pH.	No change for fecal coliform, pH. Establish BCT=BPT for BOD, TSS, oil and grease.	Fail BCT methodology, reason No. 1.
G—Sausage and luncheon meats processor	432.77	do	do	Do.
H—Ham processor	432.87	do	do	Do.
I—Canned meats processor	432.97	do	do	Do.
J—Renderers	432.107	No limitations	Establish BCT more stringent than BPT for BOD, TSS, oil and grease, pH, fecal coliform.	Pass BCT methodology.

[1] *Further Explanation of Table Entries for "Basis for Determination."*

Fail BCT methodology, reason No. 1: EPA has not identified a technically feasible candidate technology more stringent than BPT.

Fail BCT methodology, reason No. 2: EPA has not identified an economically achievable candidate technology more stringent than BPT.

Fail BCT methodology, reason No. 3: The candidate technology is not cost-reasonable; it fails the BCT cost test.

No control of conventional pollutant discharges: EPA has not yet identified a need to control conventional pollutant discharges in this subcategory. For some subcategories, there are no regulations currently in effect.

No candidate technology: EPA has not identified a candidate technology providing more stringent control of conventional pollutants than BPT. This applies to subcategories where BPT and BCT require zero discharge.

Technology under review: The BCT candidate technology is still being reviewed as a basis for setting BCT effluent limitations. The review may pertain to technical feasibility, economic achievability, or cost-reasonableness.

[2] For the Phosphate Fertilizer subcategory, the Agency has proposed an amendment to the applicability section that would exclude four plants in Louisiana from BAT and BCT effluent limitations guidelines. Final action on the amendment is pending. As part of that rulemaking, EPA will consider appropriate BCT effluent limitations guidelines for facilities in Louisiana.

III. Development of BCT Methodology and Benchmarks

A. POTW Test

As discussed earlier in this preamble, the 1979 BCT promulgation addressed the concept of reasonableness with a single measure that would be applied to BCT determinations in all industries. The Agency determined that a single methodology, or "rule-of-thumb" approach was preferable to a case-by-case approach. The core of the 1979 methodology, as directed by the statute, was a comparison of the cost of removing additional pounds of conventional pollutants by industrial dischargers to the cost of conventional pollutant removals by a POTW.

EPA considered a number of ways that a POTW test could be formulated (see the preamble to the proposed rules at 43 FR 35572, August 23, 1978). By 1977, industry was required to control pollutant discharges at a level achievable by BPT. Analagously, POTWs were required to have met effluent limitations based on secondary treatment by 1977. The Agency believed that a relevant basis of comparison for POTWs would be at an incremental level beyond secondary treatment because BCT effluent limitations guidelines would be at least equal to, and in some cases, more stringent than BPT effluent limitations guidelines. After a careful consideration of alternatives, EPA adopted a test employing a comparison of the cost to upgrade POTWs from secondary treatment to advanced secondary treatment.

Some commenters have argued that the repeal of Section 301(b)(2)(B) of the Clean Water Act changed EPA's statutory authority for relying on cost to upgrade to advanced secondary treatment as a basis for the BCT methodology. Section 301(b)(2)(B) had required that POTWs achieve "best practicable wastewater treatment technology" (BPWTT) by July 1, 1983. We do not believe that the repeal of BPWTT diminishes the rationale for using advanced secondary treatment in the POTW test or in the industry cost test.

In its final regulation on August 29, 1979, EPA stated three major reasons for using advanced secondary treatment in the POTW test (44 FR 50735). The first was that "calculation of the costs per pound of conventional pollutant removal based on the increment from secondary to advanced secondary yields the best approximation of . . . marginal costs." The second was that advanced secondary treatment represents the "knee-of-the-curve" with respect to POTW costs (referring to the point where incremental costs begin to exceed incremental benefits). The last reason was that the level of treatment for a POTW to upgrade from secondary to advanced secondary treatment roughly parallels the industrial increment under consideration. In its review, the Fourth Circuit upheld EPA's choice of advanced secondary treatment as the relevant increment for the POTW benchmark. These reasons remain the basis for our choice of the secondary to advanced secondary increment as the foundation of the POTW test.

B. Industry Cost Test

The methodology promulgated in 1979 included only the POTW test. The methodological changes proposed in 1982 were primarily in response to the 1981 Court decision, which directed EPA to develop a second test to compare the industry cost and effluent reduction benefits resulting from more stringent levels of conventional pollutant control. Neither the Court nor the legislative history of the Clean Water Act provide specific guidance on how to design this second test. In developing the industry cost-effectiveness test (or "industry cost test"), the Agency determined that it should be designed so as to meet three conditions. First, the industry cost test should use an explicit numerical benchmark. By comparing industry costs to a uniform benchmark, EPA reduces bias in evaluating so many different industries. Second, the test should measure both increases in pollution control costs and reductions of conventional pollutants and thus measure the cost-effectiveness (in cost per pound removed) of the potential BCT level of control. Third, the test should be designed so that, from a practical standpoint, the information needed to conduct the test is generally available and promulgation of BCT effluent limitations guidelines would not be further delayed.

The Agency considered several alternative structures for the second test. The 1982 notice of proposed rulemaking discussed five ways to measure industry cost-effectiveness and two ways to establish the benchmark against which the industry values would be compared. The alternatives and the rationale for selecting an alternative are discussed in detail in the preamble to the proposed rule (47 FR 49181). The industry cost and pollutant removal calculations were based on an "increasing cost ratio" that combined two computations of cost per pound removed—one to reflect the control afforded by BPT effluent limitations and the second to reflect the additional control afforded by the candidate BCT technology. While the calculations for the second test have been refined in response to comments, the second test used in today's final regulation is conceptually the same as that proposed in 1982.

One of the refinements corrected an inconsistency in the "starting point" for calculating the cost per pound for secondary treatment and the cost per pound for BPT. In the 1982 proposal, some calculations of effluent reduction were based on raw waste pollutant concentrations; in other cases, primary treatment concentrations were used. Instead of using various levels of treatment for pre-BPT (or pre-secondary) conditions, the Agency established raw wasteload as the starting point both for industrial calculations and for POTW calculations (i.e., the pre-BPT and pre-secondary treatment levels). These changes address the concerns of commenters and maintain consistency between POTW and industry calculations. Additionally, where the cost per pound for a BCT candidate technology is less than $0.01, EPA will consider the numerator of the industry cost ratio and, therefore, the entire ratio to be zero (see Section II.A.3).

C. POTW Cost Data

1. History and Overall Approach to POTW Cost Data

The methodology for both tests relies on the cost for POTWs to control conventional pollutants. The source of POTW cost data was a controversial

issue during several of the previous BCT rulemaking actions. In the 1979 promulgation and in the 1982 reproposal, EPA relied on empirical cost data. However, the 1982 action incorporated two revisions concerning EPA's use of the empirical data base. First, in the 1979 promulgation, the POTW cost comparison figure (the "POTW benchmark") was based on costs and removals for an average-sized POTW, which was 2 million gallons per day (mgd). In 1982, EPA proposed to base the POTW benchmark on cost and removal data for a range of POTW sizes. Costs per pound of pollutant removed were calculated for each of the various sizes, and then the costs were flow-weighted and summed to obtain a single POTW benchmark. The use of data for different POTW flow sizes better depicts the costs of removing conventional pollutants at POTWs because the economies of scale inherent in large POTWs can be included in the calculations. The flow-weighting approach is retained in the final rule.

Second, the 1982 proposal incorporated corrected and updated POTW cost data to calculate the POTW benchmark and the new industry cost benchmark. Incremental annual costs in the 1979 promulgation were estimated from actual POTW cost data collected by the Agency and reported in two cost documents (EPA 430/9-77-013, January 1978 and EPA 430/9-77-015, May 1978). The source of the actual cost data used in the 1982 proposal was the updated version of the cost documents used in 1979 (for the 1982 notice: EPA 430/9-80-003, April 1980 and EPA 430/9-81-004, September 1981). In both rulemakings, the cost documents provided the most up-to-date information regarding the costs of constructing and operating POTWs.

In 1983, more up-to-date cost information was again available, and on June 2, 1983, the Agency issued a notice indicating EPA's intent to use the most current data to promulgate the BCT methodology. EPA then became aware that the new data might not be appropriate for estimating the incremental cost of advanced secondary treatment. In the analysis of construction cost data, it appeared that the editing criteria to define secondary treatment systems and advanced secondary treatment systems might have been inaccurate or inconsistent. POTW costs may also have varied substantially due to site-specific factors that were unrelated to treatment plant performance. The empirical data base was not an actual study of upgrade costs at specific plants, which hindered the Agency's attempt to calculate an incremental cost. In September 1983, the Agency withdrew the new data to further evaluate the costs. The Agency also realized that the cost curves used in the 1982 proposal might be subject to the same problems as the cost curves published and withdrawn in 1983. EPA then concluded that it was necessary to use a different data source to calculate incremental costs for the POTW and industry cost benchmarks.

The alternative approach was to develop model POTWs with specified design assumptions and then present design cost estimates for those models to determine the cost of upgrading POTWs from secondary treatment to advanced secondary treatment.

The model POTWs are municipal wastewater treatment facilities with specifications for size, basic design, general operating conditions, and required effluent levels. These specifications were provided to four engineering consulting firms who then estimated the model POTW costs. The design criteria for secondary treatment required that the POTW achieve effluent limitations of 30 milligrams per liter (mg/l) BOD and 30 mg/l TSS (as maximums for 30-day averages), using technology that was current in 1977. While in some circumstances, a permit authority may allow less stringent effluent limitations for certain POTWs (e.g., 45 mg/l BOD and 45 mg/l TSS for a POTW with a trickling filter), effluent limitations of 30 mg/l BOD and 30 mg/l TSS were used for the model POTWs because, unless adjusted, they are required by the Agency's secondary treatment regulation (40 CFR 133.105).

The design criteria for advanced secondary treatment required that the secondary treatment POTW be modified to achieve more stringent effluent levels. In the 1984 notice, the Agency identified three possible effluent levels for defining advanced secondary treatment: 20 mg/l for BOD and TSS, 15 mg/l, and 10 mg/l. For each level, the Agency specified a treatment technology that could be used to upgrade the secondary POTW to meet the more stringent effluent limitations. Of the three effluent levels, the Agency selected 20 mg/l BOD and 20 mg/l TSS (as maximums for monthly averages) as the most appropriate definition of advanced secondary treatment.

In the 1982 proposal, the increment to advanced secondary treatment was from 30 mg/l to 10 mg/l for both pollutants. The Agency used a definition of 10 mg/l each of BOD and TSS in that proposal because it represented the best performance for advanced secondary treatment. In the 1984 notice, the Agency identified 20 mg/l BOD as a better choice because it was the most common permit requirement for POTWs beyond secondary treatment. Overall, the comments received on the definition of 20 mg/l were favorable, and the Agency is retaining this definition in the final methodology.

The model POTW approach was presented in the 1984 notice of data availability. Many comments supported the change to the design estimates, but the Agency received some detailed criticism of some of the design assumptions. Based on those comments, the final methodology includes some changes that refine and improve the data used for the benchmark calculations. These refinements are discussed below. The Agency is aware of the difficulties with both the empirical data base and the design estimates (see section IX, Comment Nos. 4, 8, and 9). On balance, and given the several changes to the cost data, we have determined that using design estimates is the preferred approach, and have retained this approach in the final rule.

2. Design Specifications for Model Plants

The major change affecting the model POTW costs since the 1984 notice is the specification of polymer addition as the treatment needed to upgrade a secondary POTW to advanced secondary treatment. The original model POTW specifications in the 1984 notice identified the additional treatment only as chemical addition. One of the engineering firms that estimated model POTW costs chose alum for the additive; the others chose polymer. Based on the evaluation of the comments concerning the use of alum, the Agency decided to specify polymer addition as the technology for advanced secondary treatment. While alum is effective at reducing the level of solids, its addition is usually associated with site-specific problems such as a high phosphorus content in the wastewater. The addition of polymer is a better design assumption for model POTWs. This specification change precludes the use of alum, and the engineering firm that had initially used alum revised their design and costs to reflect polymer addition.

The technology basis for secondary treatment for the model POTW is conventional activated sludge. Various sludge disposal methods are used, depending on the size of the model POTW. As mentioned above, polymer addition is the technology to upgrade the secondary POTW to meet effluent limitations of 20 mg/l BOD and 20 mg/l

TSS. Some secondary POTWs with conventional activated sludge processes may achieve better performance than 30 mg/l BOD and 30 mg/l TSS and may intermittently achieve 20 mg/l BOD and 20 mg/l TSS without additional technologies. With the constraint that an existing POTW is being modified, however, consistent and reliable performance at more stringent levels can best be achieved with additional treatment and, therefore, additional cost. Some of the comments on the 1984 notice claim that activated sludge POTWs will routinely meet the Agency's defined level of advanced secondary treatment without additional technology; that is, through better operation of existing facilities. These claims were supported by performance data from certain POTWs.

Considering the characteristics of POTWs as a whole, the Agency believes this claim is an overstatement of a secondary POTW's capability. The polymer addition step, however, would ensure that the defined level of advanced secondary treatment will be met. Polymers have been used to improve the performance of secondary POTWs; the technology is not prohibitively expensive, and it is well documented as effective. Commenters also challenged a series of specific model POTW design and costing assumptions. Many of their comments addressed sizing and capacity assumptions for specific equipment, such as influent pumps or vacuum filters. Agency engineers and each engineering firm evaluated each of these comments, reviewed the design assumptions and costs, and where necessary, corrected or revised the designs and costs.

3. Model POTW Cost Estimates

The procedure for using the engineering cost estimates is basically the same as presented in the 1984 notice. Estimates of the incremental cost to upgrade from secondary treatment to advanced secondary treatment were developed for five sizes of POTWs. Table 2 presents a distribution, by size, of POTWs in the United States. Each of the five model POTW sizes is approximately equal to the average flow in each size category, expressed in million gallons per day (mgd). The five model POTW sizes are 0.052 mgd, 0.38 mgd, 3.3 mgd, 25 mgd, and 140 mgd. The POTW and industry cost benchmarks continue to be based on weighting the cost per pound of conventional pollutants removed, according to the size distribution of POTWs. The weighting factors, shown on the last line of Table 2, are calculated by dividing the total flow for each size category by the total flow for all POTWs.

As in the proposal, the POTW costs used to calculate the benchmarks are the total annual costs of constructing and operating a secondary POTW, and the total annual cost to upgrade the POTW to advanced secondary treatment. Total annual costs include capital charges, interest, and operation and maintenance costs. Capital costs are amortized over 30 years at a 10 percent interest rate. The engineering cost estimates are presented in 1984 dollars and then indexed to 1976 third quarter dollars and to other years' dollars to facilitate comparison of the benchmark to the costs of BCT candidate technologies for industrial subcategories.

The engineering firms that provided model POTW estimates and the model POTW sizes analyzed by the respective firms are the same as those presented in the 1984 notice. The four firms are Camp Dresser and McKee, Inc., E. C. Jordan Co., Sverdrup and Parcel and Associates, Inc., and J. M. Smith and Associates Consulting Engineers. Each firm is nationally recognized for experience in designing municipal wastewater treatment facilities. The first three firms estimated costs for the three largest model POTW sizes: 3.3, 25, and 140 mgd. For these model POTWs, the three firms developed detailed estimates based on preliminary design of POTW components. The fourth firm, using planning level estimates, provided costs for the two smaller POTW sizes: 0.052 and 0.38 mgd. Planning level cost estimates were developed from empirically-based, cost-estimating curves that present costs as a function of size and also with a computer-assisted, cost-estimating program (the EPA-developed CAPDET: Computer Assisted Procedure for the Design and Evaluation of Wastewater Treatment Systems). Planning level estimates usually have a lower degree of accuracy than design estimates. However, this does not significantly affect the benchmarks because the weighting factors for the two smallest POTW sizes are very low (see Table 2).

TABLE 2—POTW SIZE DISTRIBUTION

	Size Range by Flow (mgd) [1]					
	0 to 0.105	0.106 to 1.05	1.06 to 10.5	10.6 to 50.2	50.3 & greater	All POTWs
Number of POTWs	5,021	7,033	2,686	415	96	15,251
Total flow	259	2,675	8,836	9,290	13,354	34,415
Average flow	0.0515	0.3803	3.290	22.39	139.1	2.257
Weighting factor	.0075	.0777	.2567	.2700	.3880	1.0

[1] mgd = millions of gallons per day.

Source: The 1980 Needs Survey (FRD-23; EPA 430/9-81-008, February 1981).

Each engineering firm estimated costs for a secondary POTW and for the ungrade of the POTW to advanced secondary treatment. A summary of the cost estimates is shown in Table 3. Each firm reported their estimates on a standard format to facilitate review and comparison. The reporting format presents the costs for 18 cost centers (e.g., primary clarification, aeration, chlorination) and for 16 cost divisions (e.g., electrical, concrete, equipment) within each cost center. A review of the cost estimates highlighted the major areas of difference among the firms, and also identified areas needing further review. After reviewing the final cost estimates submitted by the engineering firms, the Agency concluded that the differences in cost estimates are attributable to differences in engineering philosophies. While the basic design criteria and general operating conditions were the same for all three firms, the specific design criteria were determined by each firm, according to their best judgment, experience, and expertise. Comparisons of individual cost centers show that differences exist in the choice of equipment, size and operating specifications of equipment, structures that house the components, POTW layout, and labor requirements.

TABLE 3.—POTW TOTAL ANNUAL COST ESTIMATES FOR SECONDARY TREATMENT AND THE INCREMENTAL COST FOR ADVANCED SECONDARY TREATMENT

[1984 dollars, in millions]

	Size of Model POTW (mgd)				
	0.052	0.38	3.3	25	140
Total annual costs for secondary treatment:					
JMS	0.07	0.27			
CDM			3.23	11.81	42.36
ECJ			1.99	8.39	29.63
S&P			1.79	8.16	32.99
Incremental cost for advanced secondary treatment:					
JMS	0.0	0.0			
CDM			0.07	0.48	1.86
ECJ			0.11	0.44	1.28
S&P			0.07	0.34	1.53

Key:
JMS: J.M. Smith and Associates Consulting Engineers.
CDM: Camp Dresser and McKee, Inc.
ECJ: E.C. Jordan Co.
S&P: Sverdrup and Parcel and Associates, Inc.

For both secondary and advanced secondary POTWs, the Agency believes that the cost estimates prepared by the engineering firms are representative of the costs to construct and operate a POTW at the specified treatment level. Therefore, all of those estimates were used in the benchmark calculations. For the three largest POTW sizes where there are three estimates, mean costs (arithmetic averages) were calculated for each model POTW size. These average costs, after indexing to 1976 third quarter dollars, are shown in Table 4.

TABLE 4.—TOTAL ANNUAL COSTS FOR MODEL PLANTS

[1976 dollars, in millions]

	Size of POTW (mgd)				
	0.052	0.38	3.3	25	140
Total annual cost for secondary treatment	0.040	0.156	1.351	5.456	20.151
Total annual cost of increment to advanced secondary treatment	0	0	0.047	0.240	0.883

D. POTW Performance Data

1. Use of Long-Term Performance Data

Just as the calculations for both tests rely on the cost for POTWs to control conventional pollutants, the calculations also use the pounds of pollutants removed by various treatment technologies. Prior to the 1884 notice (i.e., in the 1982 proposal), the methodology was sometimes inconsistent in defining performance when comparing different levels of treatment (e.g., raw waste vs. secondary treatment) and when comparing POTW calculations to industry calculations. In some cases, long-term performance data were used; in other cases, maximum 30-day averages were used. For example, an industry's cost per pound, based on long-term data, was compared to a benchmark based on 30-day data. Inconsistent comparisons of this kind biased the test outcomes against industry. This problem was identified in comments on the 1982 proposal, and in the 1984 notice, the Agency responded with its planned corrections: (1) Whenever possible, use long-term performance data to calculate pounds of pollutants removed (where long-term performance is represented by a minimum of 12 months performance); and (2) compare industry costs of removal to POTW costs of removal on a consistent basis.

While the preferred approach for calculating the pounds of pollutants removed is to base the calculations on long-term performance, the Agency lacks sufficient information to estimate long-term performance for the secondary industries for which BCT effluent limitations are established by this rulemaking. Instead, the pollutant removal calculations are based on maximum 30-day effluent limitations. To apply the methodology consistently, the Agency established a second tier of benchmarks, which are correspondingly based on maximum 30-day effluent limitations. Thus, the bias from inconsistent comparisons of treatment effectiveness is eliminated. A summary of the type of performance data used for each tier of calculations is shown in Table 5.

TABLE 5.—THE "TWO-TIER" APPROACH: TYPE OF PERFORMANCE DATA USED TO CALCULATE INCREMENTAL POLLUTANT REMOVALS

	Tier 1—Long-term effluent data available	Tier 2—Long-term effluent data not available
Industry Calculations:		
BPT	Long-term average.	Maximum 30-day average.
BCT	do	Do.
Benchmark Calculations:		
Secondary Treatment	do	Do.
Advanced Secondary Treatment.	do	Do.

While secondary treatment and advanced secondary treatment are generally defined by permit requirements (maximum 30-day limitations), the calculations for pounds of pollutant removed are based on long-term performance. EPA used actual long-term performance data for POTWs achieving the specified permit requirements (30 mg/l for secondary treatment and 20 mg/l for advanced secondary treatment) to derive long-term concentrations. The accuracy of long-term performance data is not greatly affected by site-specific factors and, thus it is appropriate for the Agency to use actual POTW performance data. The 1984 notice set forth the Agency's plans to derive long-term average pollutant concentrations that could be used in the BCT methodology by applying a set of editing criteria to a POTW performance data base to identify a group of POTWs representative of secondary and advanced secondary treatment.

The Agency received substantial comment on the POTW performance data that were used in the 1984 notice. Some comments were particularly critical of the editing criteria used to identify secondary and advanced secondary POTWs in EPA's POTW performance data base. Comments on the 1984 notice generally supported the use of long-term average concentrations, but concern focused on the effluent concentrations that were used. Commenters claimed the long-term concentrations were not representative of secondary and advanced secondary POTWs.

The final methodology continues to use annual average concentrations and continues to derive them from actual performance data. The source of the performance data is a data base covering a range of POTW sizes and treatment technologies. The focus of the data collection effort (which was reported in EPA 430/9-81-004, September 1981) was POTW operation and maintenance costs, but the data base also contains performance data (such as influent and effluent pollutant concentrations), flow data, permit information, and the type of treatment at each facility. For purposes of the BCT methodology, secondary and advanced secondary POTWs are identified by editing the data base for well-operated POTWs that are characteristic of the specified treatment level in terms of permit requirements, performance, and treatment processes.

2. Editing Criteria for Long-Term Performance Data

a. *List of Editing Criteria.* The general objective of the performance data editing criteria is to identify POTWs characteristic of secondary and advanced secondary treatment. The current editing criteria are as follows. POTWs are excluded from the data base if any of the following criteria are met: (1) Less than 12 months of BOD and TSS effluent data are available. (2) Permit limit for the POTW is different than 30 mg/l BOD for a secondary POTW and 20 mg/l for an advanced secondary POTW. (3) BOD and TSS permit limits are exceeded more than once in a 12 month period. One exceedance is allowed for both BOD and TSS if occurring in the same month. (4) The POTW has unit processes not characteristic of either secondary treatment or advanced secondary treatment. The processes considered appropriate for secondary and advanced secondary POTWs are listed below. (5) All BOD and TSS concentrations are 20 mg/l or below for secondary treatment or 10 mg/l or below for advanced secondary treatment.

The first editing criterion remains unchanged from the 1984 notice and

simply defines EPA's minimum information requirements for POTWs in the data base. The second criterion reflects the definitions of secondary and advanced secondary treatment in terms of permit limitations. The three most significant changes from the 1984 notice concern the final three editing criteria.

b. *Criterion 3: Violation of BOD and TSS Permit Limits.* The original editing criteria (for the 1984 notice) to define secondary POTWs specified a permit limitation for BOD of 30 mg/l. The criteria also required that the POTW be in compliance with its permit; that is, the actual monthly average effluent levels for both BOD and TSS has to be 30 mg/l or lower. One violation was allowed, meaning that one monthly average effluent value for either BOD of TSS could exceed 30 mg/l. Some commenters claimed that allowing only one violation of the monthly average limit was inappropriate because the effluent TSS concentration is correlated to the effluent BOD concentration. As a result of this relationship, commenters claimed that the Agency had incorrectly eliminated POTWs from the analysis. To resolve this, EPA evaluated the relationship between BOD and TSS and concluded that, under certain conditions, allowing two violations is a more appropriate editing rule for defining a well-operated secondary POTW. Therefore, the final editing criteria allow one violation each of the BOD and TSS permit requirements if those violations occur in the same month. Violations in the same month only were permitted to allow for the relationship between BOD and TSS; this change is consistent with the objective of the editing criteria—to identify well-operated POTWs.

c. *Criterion 4: Uncharacteristic Unit Processes.* Another comment concerning the editing criteria was that under-performers (i.e., POTWs not in compliance with their permit requirements) were systematically excluded from the analysis while over-performers (i.e., POTWs operating such that BOD and TSS effluent concentrations were much lower than the permit requirements) were included. Commenters argued that including the over-performers lowers the overall average BOD and TSS effluent concentrations, resulting in an incorrect assessment of the performance of POTWs as a whole. The Agency evaluated these comments by analyzing the following factors that affect why POTWs might perform better than required by their permit: (1) Hydraulic loading, (2) unit processes, and (3) influent pollutant characteristics.

When a POTW is hydraulically underloaded (i.e., the daily volume of wastewater treated is less than the daily volume the POTW was designed to treat), performance may be better than the design performance. The issue of underloaded POTWs was raised repeatedly in the comments because many of the POTWs in the performance data base were underloaded. This issue was initially considered when the original editing criteria were established. The Agency evaluated the POTW data to determine if a relationship existed between the actual flow as a percent of design flow and effluent BOD and TSS concentrations. No statistically signficant relationships were found.

Another reason why POTWs could perform better than required by their permits is that the unit processes at the POTW are not typical of secondary treatment. For example, a POTW may have a filter, which is more typical of advanced wastewater treatment than of secondary treatment, and still have secondary treatment permit limits (i.e., 30-day effluent BOD and TSS concentrations of 30 mg/l). In the initial editing criteria for calculating long-term averages, no consideration was given to the type of unit processes in a POTW. In response to comments, the Agency changed the editing rules so that unit processes would be considered in selecting POTWs whose effluent data would be used to calculate the long-term averages. Biological processes considered appropriate for secondary POTWs included trickling filter, rotating biological contactor, and activated sludge. These processes were selected because, when used with other processes such as settling units, they can achieve 30 mg/l BOD and 30 mg/l TSS and because, as reported in the 1978 EPA Needs Survey, they are the most prevalant biological treatment processes at POTWs. Unit processes considered appropriate for advanced secondary POTWs are those processes found in secondary POTWs plus chemical addition to the wastewater.

A third reason why POTW performance may vary concerns influent pollutant characteristics. If pollutant concentrations are high, the biological unit process may not become acclimated to the wastewater, and thus, not perform well. If the pollutant concentrations are low, there may not be enough organic material in the wastewater for the biological unit to operate properly. In either case. pollutant removals may be low. The Agency evaluated the impact of influent pollutant characterization on POTW performance by determining if a statistical correlation exists between the influent and effluent pollutant concentrations. No significant correlation was found, suggesting that POTWs perform equally well within a broad range of influent wastewater pollutant concentrations.

Thus, based on the results of the Agency's review, the editing criteria were changed to reflect differences in unit processes. No changes were made based on either the POTW hydraulic loading or influent pollutant characteristics for the reasons discussed above.

d. *Criterion 5: Actual Performance Consistently Beyond Defined Treatment Levels.* Another criticism of the editing criteria presented in the 1984 notice was that actual performance of the POTWs was not considered, and as a consequence, the performance results were flawed. In the current editing criteria, the fifth criterion accounts for actual performance. The fifth criterion eliminates POTWs from the analysis if they consistently perform at levels better than would be characteristic of secondary or advanced secondary treatment. Two parameters were used to account for performance: (1) Effluent BOD and TSS concentrations and (2) the frequency of those effluent concentrations.

The fifth editing criterion for secondary treatment eliminates data for a POTW when all of a POTW's effluent BOD and TSS concentrations are 20 mg/l or below. The Agency selected 20 mg/l as the "cut-off" for secondary treatment because advanced secondary treatment is defined by maximum 30-day concentrations of 20 mg/l. Therefore, POTWs consistently meeting the requirements for advanced secondary treatment are excluded from the calculation of long-term averages for secondary treatment. For advanced secondary treatment, the fifth editing criterion eliminates a POTW from the data base when all of a POTW's effluent BOD and TSS concentrations are 10 mg/l or below. The 10 mg/l concentration is the effluent level at which the Agency believes the additional treatment needed to meet that concentration would be characterized as advanced wastewater treatment. The 20 mg/l "cut-off" for secondary treatment and the 10 mg/l "cut-off" for advanced secondary treatment were suggested by several commenters on the 1984 notice. The Agency agreed with the commenters and, therefore, adopted the fifth editing criterion.

The Agency believes that the final editing criteria yield a group of POTWs

characteristics of the specified treatment levels. POTWs whose permit limits, compliance records, treatment processes, and actual performance allowed them to remain in the performance data based were then used to calculate long-term average performance. Long-term BOD and TSS averages for each treatment level were calculated by averaging the monthly average BOD and TSS effluent concentrations for those POTWs identified as being representative of each treatment level.

3. Summary of POTW Performance Data

A summary of the performance data analysis is presented in Table 6. For secondary POTWs, the long-term average concentrations are 16.14 mg/l BOD and 15.84 mg/l TSS, based on data from 52 POTWs. For advanced secondary treatment, the long-term average concentrations are 10.24 mg/l BOD and 10.35 mg/l TSS, based on data from 22 POTWS. The change in average effluent concentrations from secondary to advanced secondary treatment is greater than the change presented in the September 1984 notice due to the revisions to the editing criteria. The Agency believes the effluent concentrations used in today's final regulation are characteristic of the specified treatment levels and are appropriate values to use to calculate the BCT benchmarks.

The number of pounds of pollutants removed at each treatment level is calculated by multiplying the change in concentration times the POTW flow (and multiplying by the appropriate conversion factors).

Using the concentrations for secondary and advanced secondary treatment shown in Table 6, the total change in effluent BOD and TSS concentration between secondary treatment and advanced secondary treatment is 11.39 mg/l. The number of pounds of pollutants removed for each of the flow sizes is shown in Table 7.

TABLE 6.—LONG-TERM AVERAGE EFFLUENT POTW CONCENTRATIONS

Treatment level	Number of POTWs in data base	Maximum 30-day average (mg/l)		Long-term average concentration (mg/l)	
		BOD	TSS	BOD	TSS
Raw waste				210	210
Secondary treatment	52	30.0	30.0	16.14	15.84
Advanced secondary treatment	22	20.0	20.0	10.24	10.35

TABLE 7.—INCREMENTAL POLLUTANT REMOVAL: SECONDARY TREATMENT TO ADVANCED SECONDARY TREATMENT

Flow (mgd)	Pollutants removed per year (million pounds of BOD and TSS)
0.052	0.002
0.38	0.013
3.3	0.114
25	0.867
140	4.857

E. Benchmark Calculations

1. The POTW Benchmark, First Tier

The first tier POTW benchmark is used for industry comparisons when long-term performance data are available—the preferred approach. The POTW benchmark is the incremental cost per pound to remove conventional pollutants beyond secondary treatment to advanced secondary treatment. The incremental cost is based on costs for five sizes of model POTWs, as described above, in Section C.3. The number of pounds of pollutant removed is based on the difference in long-term average pollutant concentrations between secondary and advanced secondary treatment, as described in Section D.

The next step in the calculations is to determine the incremental cost of removal. For each POTW flow, we divide the incremental annual cost (Table 4) by the incremental pollutant removal (Table 7) and weight the results by the factors shown in Table 2. These calculations are summarized in Table 8. The result is a benchmark of $0.25 per pound (1976 dollars). The benchmark is indexed for other time periods in Table 9.

TABLE 8.—SUMMARY OF POTW BENCHMARK CALCULATIONS: SECONDARY TREATMENT TO ADVANCED SECONDARY TREATMENT, FIRST TIER

[1976 dollars]

POTW flow (mgd)	Incremental annual cost (dollars millions)	Incremental annual removal (million pounds)	Dollar per pound	Weighting factor	Weighted dollar per pound
0.052	0	0.002	0	0.0075	0
0.38	0	0.013	0	0.0777	0
3.3	0.047	0.114	0.41	0.2567	0.11
25	0.240	0.867	0.28	0.2700	0.07
140	0.883	4.857	0.18	0.3880	0.07
Total					0.25

TABLE 9.—POTW BENCHMARKS (FIRST TIER) FOR VARIOUS TIME PERIODS

[Dollar per pound]

Year	Quarter			
	1st	2nd	3rd	4th
1976	0.24	0.25	0.25	0.26
1978	0.28	0.29	0.29	0.30
1980	0.35	0.36	0.36	0.37
1982	0.42	0.42	0.43	0.43
1983	0.43	0.43	0.44	0.44
1984	0.44	0.45	0.45	0.46
1985	0.47	0.47	0.47	

2. The Industry Cost Benchmark, First Tier

The industry cost benchmark compares the POTW cost per pound of removing conventional pollutants between scondary treatment and advanced secondary treatment to the cost per pound removed between raw wasteload and secondary treatment. This section outlines the calculations for the industry cost test.

For each POTW flow category, we calculate the following ratio: incremental cost per pound for upgrading the POTW from secondary to advanced secondary treatment divided by the cost per pound to achieve secondary treatment from raw wasteload. The first value in the ratio is the same incremental cost per pound calculated for the first test (the POTW benchmark). The second value in the ratio is the cost per pound to achieve secondary treatment from raw wasteload. The costs to achieve secondary treatment, originally shown in Table 4, are repeated in Table 10. The incremental pollutant removals for raw wasteload to secondary treatment are calculated by multiplying the POTW flow by change in pollutant concentrations. The raw waste influent concentrations for the model POTWs are assumed to be 210 mg/l BOD and 210 mg/l TSS. These influent concentrations are annual averages based on the Agency's evaluation of POTW data from the "1980 Needs Survey" and from "Fate of Priority Pollutants in Publicly Owned Treatment Works" (EPA 440/1-82-303, September 1982). Thus, the change in concentration from raw waste to secondary treatment is from 210 to 16.14 mg/l for BOD and from 210 to 15.84 mg/l for TSS. The total change in concentration for both pollutants is 388.02 mg/l. This change in concentration is multiplied by flow to calculate the number of pounds removed by secondary treatment. These results are shown in the third column of Table 10. The dollar per pound values for each size category are then calculated by dividing the incremental cost by the

incremental removal. The results are shown in the final column of Table 10.

TABLE 10.—INCREMENTAL ANNUAL COST PER POUND OF POLLUTANTS REMOVED: RAW WASTE TO SECONDARY TREATMENT (FIRST TIER)

[1976 dollars]

POTW flow (mgd)	Incremental annual cost (million dollars)	Incremental annual removal (million pounds)	Dollar per pound removed
0.052	0.040	0.061	0.66
0.38	0.156	0.449	0.35
3.3	1.351	3.900	0.35
25	5.456	29.545	0.18
140	20.151	165.451	0.12

The remaining industry cost benchmark calculations are summarized in Table 11. For each POTW flow, the cost per pound for the increment of secondary treatment to advanced secondary treatment is divided by the cost per pound for the increment of raw waste to secondary treatment. Those cost ratios are multiplied by the weighting factors for each size category, and the weighted ratios are summed to obtain the industry cost benchmark. The result of these calculations is a benchmark of 1.29.

TABLE 11.—SUMMARY OF INDUSTRY COST BENCHMARK CALCULATIONS (FIRST TIER)

POTW flow (mgd)	Incremental cost per pound (1976 dollars)		Cost ratio*	Weighting factor	Weighted ratio
	Raw waste to secondary treatment	Secondary treatment to advanced secondary			
0.052	0.66	0	0	0.0075	0
0.38	0.35	0	0	0.0777	0
3.3	0.35	0.41	1.20	0.2567	0.31
25	0.18	0.28	1.50	0.2700	0.40
140	0.12	0.18	1.49	0.3880	0.58
Total					1.29

* Interim result shown in this column may appear incorrect due to rounding.

3. Summary of Second Tier Benchmarks

a. Second Tier POTW Benchmark. Calculations for the second tier POTW benchmark are basically the same as the calculations for the first tier; the only differences are the pollutant concentrations used to calculate the pounds of pollutants removed. For the second tier, we use maximum 30-day average concentrations instead of long-term average concentrations. The calculations for the second tier POTW benchmark are summarized in Table 12. The incremental pollutant removals are again calculated by multiplying the change in concentration by the POTW flow. For the second tier benchmark, the change in concentration is from 30 mg/l to 20 mg/l for both BOD and TSS. The resulting number of pounds of pollutants removed are shown in the third column of Table 12. For each POTW flow, the cost is then divided by the pollutant removal; the resulting dollar per pound is multiplied by the weighting factor; and the weighted costs are summed. The result of these calculations is a second tier POTW benchmark of $0.14 per pound (1976 dollars).

TABLE 12.—SUMMARY OF SECOND TIER POTW BENCHMARK CALCULATIONS

[1976 dollars]

POTW flow (mgd)	Incremental annual cost (million dollars)	Incremental annual removal (million pounds)	Dollar per pound	Weighting factor	Weighted dollar per pound
0.052	0	0.003	0	0.0075	0
0.38	0	0.023	0	0.0777	0
3.3	0.047	0.201	0.24	0.2567	0.06
25	0.240	1.523	0.16	0.2700	0.04
140	0.883	8.528	0.10	0.3880	0.04
Total					0.14

b. Second Tier Industry Cost Benchmark. Calculations for the second tier industry benchmark are the same as the calculations for the first tier, with the exception of pollutant concentrations. The cost ratio remains as follows: the cost per pound to upgrade the POTW from secondary treatment to advanced secondary treatment is divided by the cost per pound to achieve secondary treatment from raw wasteload. The first value in the ratio has already been explained. For the second value in the ratio, the change in concentration for both BOD and TSS is from 210 mg/l to 30 mg/l. Thus, the total change in concentration is 360 mg/l, which is multiplied by flow to calculate the number of pounds removed by secondary treatment. The cost per pound for achieving secondary treatment from raw waste is shown in Table 13. The remaining benchmark calculations are summarized in Table 14. The cost ratios in the fourth column of Table 14 are multiplied by the weighting factors for each size category to obtain flow-weighted ratios. The sum of the flow-weighted ratios is the second tier industry cost benchmark of 0.68.

TABLE 13.—INCREMENTAL ANNUAL COST PER POUND OF REMOVAL FOR RAW WASTE TO SECONDARY TREATMENT (SECOND TIER)

[1976 dollars]

POTW flow (mgd)	Incremental annual cost (dollars millions)	Incremental annual removal (million pounds)	Dollar per pound removed*
0.052	0.040	0.057	0.71
0.38	0.156	0.417	0.38
3.3	1.351	3.618	0.37
25	5.456	27.411	0.20
140	20.151	153.504	0.13

* Result shown in this column may appear incorrect due to rounding.

TABLE 14.—SUMMARY OF INDUSTRY COST BENCHMARK (SECOND TIER)

POTW flow (mgd)	Incremental cost per pound (1976 dollars)		Cost ratio*	Weighting factor	Weighted ratio
	Raw waste to secondary treatment	Secondary treatment to advanced secondary			
0.052	0.71	0	0	0.0075	0
0.38	0.38	0	0	0.0777	0
3.3	0.37	0.24	0.63	0.2567	0.16
25	0.20	0.16	0.79	0.2700	0.21
140	0.13	0.10	0.79	0.3880	0.31
Total					0.68

* Interim result shown in this column may appear incorrect due to rounding.

IV. Status of Proposed BCT Effluent Limitations Guidelines for Primary Industries

A. Introduction

The final methodology for determining cost reasonableness, as described in this preamble, generally applies to all industries. The rulemaking actions to promulgate or propose BCT effluent limitations for primary industries will appear in separate notices. The expected conclusions for two industries that have received special attention in previous BCT notices, Pharmaceutical Manufacturing and Pulp and Paper, are discussed below. For four other primary industries, the status of BCT effluent limitations is also presented because they were included in the 1982 proposal. Again, effluent limitations for these industries are not included in today's regulation, though today's rulemaking on the BCT methodology provides part of the basis for their subsequent promulgation.

B. Primary Industry Discussions

1. Pharmaceutical Manufacturing

EPA proposed BCT effluent limitations guidelines for the Pharmaceutical Manufacturing industry on November 26, 1982 (47 FR 53584). In a

Notice of Availability on March 9, 1984, EPA provided new cost information that would be used to develop BCT effluent limitations (49 FR 8967). In response to comments concerning that notice, the Agency revised the cost data and calculations used to conduct the BCT cost test. The revised cost data appear in the record for this rulemaking. While those revisions are preliminary and have not yet been published, based on the current data and analysis and the BCT methodology promulgated today, none of the BCT candidate technologies for the four subcategories would pass the cost test, and all four subcategories would have BCT effluent limitations equal to BPT effluent limitations. The Agency plans to promulgate final BCT limitations in a subsequent **Federal Register** notice.

2. Pulp, Paper, and Paperboard

BCT effluent limitations for the Pulp, Paper, and Paperboard industry were included in the 1982 BCT proposal (47 FR 49176). At that time, EPA proposed BCT effluent limitations more stringent than BPT effluent limitations for three subcategories (of a total of 25 subcategories). In 1984, when the Agency published possible changes to the methodology, the number of subcategories passing the BCT cost test increased to ten (49 FR 37046, September 20, 1984). Cost and effluent reduction data for the industry were still preliminary at that time, and the Agency indicated that revisions in those data were expected. These revisions are now nearly complete, and while not yet published, the Agency does not anticipate further changes regarding the impact of the BCT methodology. The revised data are included in the record for today's regulation. Based on the current analyses and the BCT methodology published today, the Agency expects that none of the BCT candidate technologies for any subcategory will pass the cost test, and that BCT effluent limitations for all subcategories will be established in a subsequent **Federal Register** notice as equal to BPT effluent limitations.

3. Timber Products

BCT effluent limitations were established for two of the 16 subcategories in January 1981 (46 FR 8285); they were subsequently withdrawn in February 1982 (47 FR 6835). In October 1982, EPA proposed BCT effluent limitations for 13 subcategories (47 FR 49176). The Agency is still evaluating the proposed limitations and plans to promulgate final limitations in a subsequent **Federal Register** notice.

4. Inorganic Chemicals

In the October 1982 BCT proposal (47 FR 49176), EPA proposed BCT effluent limitations for two subcategories, Hydrofluoric Acid and Chlor-Alkali (Diaphragm Cell). The Agency is still evaluating the proposed limitations and will promulgate final limitations in a subsequent **Federal Register** notice.

5. Metal Finishing

Effluent limitations based on BCT were included in the October 1982 BCT proposal (47 FR 49176). When most of the other effluent limitations guidelines were established for this category in July 1983 (e.g., those based on BPT and BAT, 48 FR 32485), EPA took no further action with respect to regulations based on BCT. The Agency is still evaluating the proposed BCT limitations and plans to promulgate final limitations in a subsequent **Federal Register** notice.

6. Ore Mining and Dressing

In the October 1982 BCT proposal, EPA proposed BCT effluent limitations for seven subcategories (47 FR 49176). When EPA issued the final regulation for this category in December 1982, all sections pertaining to BCT were reserved. The Agency is still evaluating the proposed limitations and plans to promulgate final limitations in a subsequent **Federal Register** notice.

In a subsequent action that only addressed the Gold Placer Mining Subcategory, EPA proposed BCT effluent limitations more stringent than BPT effluent limitations (50 FR 47982, November 20, 1985). As explained in the preamble to that proposed rule, the incremental cost per pound of removing conventional pollutants for the BCT candidate technology is minimal; the value is estimated to be less than one cent. The Agency believes this cost is sufficiently low that the candidate technology is cost-reasonable, and the BCT effluent limitations were proposed accordingly. The Agency will review all public comments and address the application of the BCT methodology to this subcategory when we promulgate the Gold Placer Mining regulations.

V. BCT Effluent Limitations Guidelines for Secondary Industries

A. Introduction

One major purpose of this rulemaking is to establish BCT effluent limitations for many of the secondary industries. EPA reviewed the status of BCT effluent limitations in each subcategory in the following industries: Dairy Products, Grain Mills, Canned and Preserved Fruits and Vegetables, Canned and Preserved Seafoods, Sugar Processing, Cement Manufacturing, Feedlots, Fertilizer Manufacturing, Phosphate Manufacturing, Ferroalloy Manufacturing, Glass Manufacturing, Asbestos Manufacturing, Meat Products, and Mineral Mining and Processing. A summary of the results is shown in Table 1. The background data and calculations are reported in the record for this rulemaking.

The BCT cost test calculations for these industries were frequently based on cost and effluent data collected at the time of the original proposal and promulgation of BAT effluent limitations for each industry. If more current information regarding technology options and their economic achievability became available after promulgation of a final rule, EPA used that information to determine whether the technology satisfied all of the statutory requirements. Thus, the Agency is generally adopting previous findings concerning availability and effectiveness of treatment technologies.

In addition to the BCT cost test, section 304(b)(4)(B) of the Clean Water Act requires EPA to consider other factors such as the age of equipment, production process, and energy requirements when establishing BCT effluent limitations. Based on the rulemaking record for these industries and on this proceeding, EPA has determined that the final BCT effluent limitations following this preamble are technically feasible and otherwise satisfy section 304(b)(4)(B).

Today's regulation covers 135 subcategories (including subdivisions of subcategories); seven pass the BCT cost test and EPA is promulgating BCT limitations more stringent than BPT in these cases. For 88 of the remaining subcategories, BCT limitations are established equal to BPT limitations either because the candidate BCT technology fails the BCT cost test (48 subcategories) or because the Agency has not identified a technology that will achieve greater removals of conventional pollutants than achieved by BPT and also satisfy the requirements with respect to technical and economic feasibility (40 subcategories). For the remaining 40 subcategories, no action is taken with respect to BCT effluent limitations for one of two reasons. First, after reviewing existing limitations under the final BCT methodology, the Agency found that the existing limitations required no change, or second, the Agency has not completed a review of the candidate BCT technologies. A discussion of BCT regulations for each secondary industry follows.

B. Rationale for Establishing BCT Effluent Limitations and Changes Since Proposal

1. Dairy Products Processing (40 CFR Part 405)

The technology basis for the former BAT limitations was tertiary treatment by multimedia filtration. These BAT limitations addressed conventional pollutants only, and in 1979, were replaced by BCT limitations. Prior to the reproposal of BCT limitations in 1982, the Agency reviewed additional information regarding the filtration technology and determined that to ensure effective, year-round performance, it may be necessary to employ coagulation-sedimentation prior to filtration. This may be required because the suspended solids in biologically-treated dairy products processing wastewaters are difficult to treat, in that the excess solids can cause filter blinding and substantial operational difficulty. When the costs of coagulation-sedimentation are taken into account, none of the subcategories pass the BCT cost test. Additionally, EPA has not identified any other technology that results in further reduction of conventional pollutant discharges. Therefore, EPA is establishing BCT limitations equal to BPT limitations for all 12 subcategories in this industry. The final action for these subcategories is the same as the action proposed in 1982.

2. Grain Mills (40 CFR Part 406)

There are ten subcategories in this industry. For four subcategories (Normal Wheat Flour Milling, Normal Rice Milling, Animal Feed, and Hot Cereal), the BPT regulation requires zero discharge of process wastewater. BCT limitations for these four subcategories, established in 1979, already require zero discharge and remain substantively unchanged by this rulemaking because BCT limitations cannot be less stringent than BPT, and further levels of control do not exist beyond zero discharge. An editorial revision is made for these subcategories by incorporating the BPT requirement into BCT limitations by reference.

For the Corn Wet Milling Subcategory, BCT limitations were suspended in July 1980 (45 FR 45582) pending an evaluation of BPT costs. The Agency has not completed this evaluation, and the BCT limitations for this subcategory remain suspended.

The candidate BCT technology for the remaining five subcategories (Corn Dry Milling, Bulgur Wheat Flour Milling, Parboiled Rice Processing, Ready-to-Eat Cereal, and Wheat Starch and Gluten) was filtration, which was the basis for the original BAT limitations. The Agency applied the BCT cost test to this technology for these five subcategories, and it failed, indicating that filtration is not cost-reasonable in these cases. No other candidate technology has been identified and, therefore, BCT limitations are promulgated equal to BPT. The final action for these five subcategories is the same as was proposed in 1982.

3. Canned and Preserved Fruits and Vegetables Processing (40 CFR Part 407)

The candidate BCT technology for the eight subcategories in this industry was filtration. This technology fails the BCT cost test, and no other suitable technology for the removal of conventional pollutants has been identified. Therefore, BCT limitations are established equal to BPT. The final action for this industry is the same as was proposed in 1982.

4. Canned and Preserved Seafood Processing (40 CFR Part 408)

There are 33 subcategories in this industry, and five are further subdivided by geographic location for purposes of this review. The candidate BCT technology for 12 subcategories and sections of two additional subcategories was dissolved air flotation, which was the technology basis for the former BAT limitations. This technology has not been widely applied at full scale, except for the Tuna Subcategory. Space requirements for installation of this technology present problems for many of the plants. EPA has determined, therefore, that dissolved air flotation is not feasible for the following subcategories: Non-Remote Alaskan Crab Meat Processing, Non-Remote Alaskan Whole Crab and Crab Section Processing, Dungeness and Tanner Crab Processing in the Contiguous States, Non-Remote Alaskan Shrimp Processing, Northern Shrimp Processing in the Contiguous States, Southern Non-Breaded Shrimp Processing in the Contiguous States, Breaded Shrimp Processing in the Contiguous States, Alaskan Mechanized Salmon Processing (Non-Remote), West Coast Hand-Butchered Salmon Processing, West Coast Mechanized Salmon Processing, Non-Alaskan Mechanized Bottom Fish Processing, Sardine Processing, Alaskan Herring Fillet Processing (Non-Remote), and Non-Alaskan Herring Fillet Processing. The Agency has not identified any other BCT candidate technology and is therefore establishing BCT effluent limitations equal to BPT effluent limitations for these subcategories.

The basis of BAT limitations in the Tuna Subcategory was optimized dissolved air flotation with chemically-assisted coagulation. The optimized operation adds operational complexity, maintenance requirements, and disposal costs for additional sludge volume. The Agency concludes that these operational difficulties are such that optimized dissolved air flotation is not technically feasible for the Tuna Subcategory. This technology was the only BCT candidate technology identified for the Tuna Subcategory. For these reasons, BCT effluent limitations are established equal to BPT effluent limitations.

In five other subcategories, the candidate BCT technology was aerated lagoons, which was the technology basis for the former BAT limitations. Based on information evaluated after BAT limitations had been issued, EPA determined that the technology is not feasible for Conventional Blue Crab Processing, Mechanized Blue Crab Processing, Non-Alaskan Conventional Bottom Fish Processing, Mechanized Clam Processing, and Steamed and Canned Oyster Processing. EPA determined that aerated lagoons are not a feasible technology for these subcategories because lagoons require a substantial amount of land, which is not uniformly available. Further, the seasonal and often sporadic processing operations of these plants do not provide the consistent source of wastewater needed for proper functioning of biological treatment systems such as aerated lagoons. EPA has not identified any other feasible technology providing further control of conventional pollutants than BPT. Therefore, EPA is establishing BCT limitations equal to BPT for these five subcategories.

The candidate technology for BCT for three other subcategories (characterized as remote Alaskan subcategories) and for the remote section of five additional subcategories was screening of the wastes and subsequent disposal of these wastes. EPA discovered technical problems with this technology, making it unsuitable as the basis for BCT limitations. The technology relies on solid waste disposal, which can be accomplished in non-remote areas by use of reduction facilities, but in remote areas, these facilities are not economically viable. Land disposal or barging are the most viable solid waste disposal techniques available to remote seafood processors, but these techniques are often not feasible or work only during a portion of the year because of weather. Therefore, EPA is establishing BCT limitations equal to

BPT for the following remote seafood subcategories and sections of subcategories: Remote Alaskan Crab Meat Processing, Remote Alaskan Whole Crab and Crab Section Processing, Remote Alaskan Shrimp Processing, and the remote section of Alaskan Hand-Butchered Salmon Processing, Alaskan Mechanized Salmon Processing, Alaskan Bottom Fish Processing, Alaskan Scallop Processing, and Alaskan Herring Fillet Processing.

The Agency is currently considering a petition from a portion of the Alaskan seafood industry requesting that EPA redesignate certain Alaskan cities from being considered "non-remote" and instead apply the effluent limitations guidelines and standards applicable to remote cities. If this petition were granted, the BPT effluent limitations guidelines for the affected locations would be based on grinding rather than screening technology. On May 18, 1980, EPA temporarily suspended the applicability of the BPT effluent limitations guidelines for non-remote facilities located in Anchorage, Cordova, Juneau, Ketchikan, and Petersburg pending review of the industry's petition (45 FR 32675). This notice explained that during the suspension period, facilities in these cities had agreed to comply with the regulations for the remote Alaskan processors. On January 9, 1981, EPA proposed its response to the petition and, at the same time, extended the suspension of the regulations for the affected cities until EPA makes a final decision on the petition (46 FR 2544). EPA has not yet taken final action on the petition; hence, BPT effluent limitations for the five cities listed above remain suspended.

In today's rulemaking, EPA is establishing some BCT limitations equal to BPT limitations for the cities in question. Therefore, this rulemaking imposes no additional burden on any facility. If, as a result of the pending petition, there is a change in the designation of a city from "non-remote" to "remote," that change will mean a change in the BPT and BCT effluent limitations that will apply. Since the BCT effluent limitations in this rulemaking establish limitations by cross referencing the BPT effluent limitations, where the BPT effluent limitations are suspended, the BCT effluent limitations will also be considered suspended until the BPT effluent limitations are repromulgated. EPA is promulgating the BCT effluent limitations guidelines in their present form for the affected subcategories to establish the framework to apply BCT effluent limitations in the future.

For the non-remote section of three Alaskan subcategories, EPA has not completed an economic impact analysis and is therefore reserving BCT effluent limitations for Alaskan Hand-Butchered Salmon Processing (non-remote), Alaskan Bottom Fish Processing (non-remote), and Alaskan Scallop Processing (non-remote).

After issuing the former BAT regulations for two other subcategories (Fish Meal and Hand-Shucked Clam Processing), EPA determined that the candidate technology, screening of wastes and process changes, would have resulted in substantial economic impact. For the Fish Meal Processing Subcategory, 12 of the 54 direct discharging plants would probably close as a result of the former BAT regulations. Most of these plants are small facilities. For the Hand-Shucked Clam Processing Subcategory, nine of the 15 direct dischargers would probably close rather than comply with the BCT regulations. These nine plants consist of all of the six small plants and all three of the canned clam plants in the subcategory. Based on these projected impacts, EPA concludes that the technology is not economically achievable. No other technology was identified as a candidate for BCT. For these reasons, EPA establishes BCT limitations equal to BPT in these subcategories.

The BCT cost test was applied to BCT candidate technologies for the remaining five subcategories. The candidate technology for Farm-Raised Catfish Processing includes screening, grease removal, and aerated lagoons. This technology fails the POTW test, and because no other candidate technology has been identified, BCT limitations are established equal to BPT.

The candidate technology for the remaining four subcategories relies on simple in-plant controls, which have only minimal costs and pass the POTW test. Since the incremental cost between BPT and BCT is considered to be zero, the second test ratio is also considered to be zero, and the technology passes the second test. Thus, EPA has determined that in-plant controls are technically feasible, economically achievable, and pass both parts of the BCT cost test for Pacific Coast Hand-Shucked Oyster Processing, Atlantic and Gulf Coast Hand-Shucked Oyster Processing, Non-Alaskan Scallop Processing, and Abalone Processing. The Agency proposed BCT limitations based on in-plant controls for these four subcategories and specifically requested comments on the proposed decision. The Agency did not receive any adverse comments in response to that request, and no new information has been evaluated. Therefore, BCT limitations for these four subcategories are established based on in-plant controls. The final BCT limitations for this industry are the same as the BCT regulations that were proposed in 1982.

5. Sugar Processing (40 CFR Part 409)

There are eight subcategories in this industry. For two subcategories, BPT regulations require zero discharge of process wastewater. No technology more stringent than zero discharge exists and BCT cannot be established at a level less stringent than BPT. Therefore, EPA considers BCT requirements of zero discharge to be reasonable and is establishing BCT limitations equal to BPT for the Florida and Texas Raw Cane Sugar Processing Subcategory and the Hawaiian Raw Cane Sugar Processing Subcategory.

For the remaining six subcategories, EPA is also establishing BCT limitations equal to BPT because the candidate BCT technology fails the BCT cost test and no other candidate technology more stringent than BPT has been identified. These subcategories are Crystalline Cane Sugar Refining, Liquid Cane Sugar Refining, Louisiana Raw Cane Sugar Processing, Puerto Rican Raw Cane Sugar Processing, Hilo-Hamakua Coast of the Island of Hawaii Raw Cane Sugar Processing, and Beet Sugar Processing. For the first two of these six subcategories, the candidate technology is recirculation of barometric condenser cooling water and discharge of blowdown to an upgraded biological system. For the next two subcategories, the candidate technology is recycle of barometric condenser cooling water and cane wash water with the blowdown going to biological treatment. For the Hilo-Hamakua Coast subcategory, the candidate technology is recirculation of barometric condenser cooling water and biological treatment of both cane wash water and the blowdown from the recirculation system. For Beet Sugar Processing, the candidate technology is zero discharge of barometric condenser cooling water. Final BCT effluent limitations for all eight subcategories are the same as were proposed in 1982.

6. Cement Manufacturing (40 CFR Part 411)

Two of the three subcategories (Nonleaching and Materials Storage Piles Runoff) have BCT limitations equal to BPT. The Agency has not identified any other candidate technology that

provides additional control of conventional pollutants and, therefore, BCT effluent limitations in those two subcategories remain unchanged by this rulemaking. The BCT candidate technology for the remaining subcategory, Leaching, is treatment and reuse. This technology fails the BCT cost test, no other candidate technology has been identified, and BCT limitations are established equal to BPT. This action is the same as the 1982 proposed action for the Leaching Subcategory.

7. Feedlots (40 CFR Part 412)

The Feedlots category consists of two subcategories. For the first (All Subcategories Except Ducks), BCT limitations are primarily based on zero discharge of process wastewater pollutants. The 1982 proposed action for this subcategory would have removed the section for BCT effluent limitations because the existing BCT limitations are more stringent than BPT limitations due to the rainfall event specified for discharge of pollutants from the overflow. The Agency has not evaluated the cost of the more stringent overflow restriction according to the BCT methodology. Therefore, the existing section is removed and reserved. The existing BAT limitations, however, remain unchanged; they also require zero discharge of process waste pollutants with the more restrictive condition for discharge from overflow.

For the second subcategory (Ducks), conventional pollutant discharges from man-made or natural (e.g., marshes) swimwater areas are difficult to quantify. These discharges are also difficult to adapt to traditional end-of-pipe treatment technologies. The technology basis for BAT (and the candidate BCT technology) was dry lots, but the effluent reduction benefits between existing discharges and dry lots cannot readily be quantified. Therefore, the BCT cost test cannot be performed. EPA did not propose, and is not now establishing BCT effluent limitations guidelines for duck feedlots.

8. Fertilizer (40 CFR Part 418)

The Agency has not established effluent limitations guidelines to control conventional pollutant discharges for three of the seven subcategories in this category: Urea, Ammonium Nitrate, and Nitric Acid. The existing BPT and BAT requirements for those subcategories do not address conventional pollutants. Therefore, no action is taken with respect to BCT for these three subcategories; there are no BCT effluent limitations guidelines. For two other subcategories (Ammonium Sulfate Production and Mixed and Blend Fertilizer Production), BCT limitations based on zero discharge of process wastewater pollutants have already been promulgated. In both of these subcategories, the BPT regulations are also based on zero discharge and, therefore, no evaluation by the BCT cost test is necessary.

For the Phosphate Subcategory, BCT limitations based on zero discharge have already been promulgated but with discharge allowances for specified rainfall events. No more stringent candidate technology for control of conventional pollutants has been identified; the existing BCT limitations for the Phosphate Fertilizer Subcategory remain unchanged. On July 25, 1984, the Agency proposed to amend the applicability section for Phosphate Fertilizer to exclude four plants in Louisiana from BAT and BCT effluent limitations (49 FR 29977). Final action on this amendment is pending and is not affected by today's rulemaking.

For the Ammonia Subcategory, BCT limitations have already been promulgated equal to BPT. The Agency has not identified any other candidate technologies that would result in additional control of conventional pollutants. Therefore, no change is being made to the BCT effluent limitations for this subcategory. The BAT limitations for the Ammonia Subcategory are being revised to remove the limitation for pH, which is a conventional pollutant and cannot be included in the BAT limitations. Instead, it is included in the BCT limitations.

This rulemaking also includes minor editorial corrections for the Phosphate and Ammonia Subcategories to correct the titles in the table of contents.

9. Phosphate Manufacturing (40 CFR Part 422)

The Phosphate category covers six subcategories. Three subcategories (Phosphorus Production, Phosphorus Consuming, and Phosphate) do not have any regulations in effect; they consist of applicability sections only. EPA is not establishing BCT limitations for these subcategories at this time. Two other subcategories (Defluorinated Phosphate Rock and Defluorinated Phosphoric Acid) already have BCT limitations equal to BPT; no further analysis is required because both regulations are based on zero discharge with effluent limitations for specified rainfall events. The existing BCT requirements for these subcategories remain unchanged by this final action. For the remaining subcategory, Sodium Phosphates, the candidate technology is increased recirculation of process wastewater, which passes the BCT cost test. The incremental costs are estimated to be minimal in that any costs attributed to reducing the flow to the treatment system are offset by the smaller amount of lime needed. Therefore, BCT limitations at the BAT level of control are reasonable and are so established. This level of control is the same as was proposed in 1982.

10. Ferroalloy Manufacturing (40 CFR Part 424)

One of the seven subcategories (Other Calcium Carbide Furnaces) has BCT limitations equal to BPT already in effect; both BCT and BPT require zero discharge of process wastewater pollutants. No other technology provides additional control and therefore, the existing BCT limitations remain unchanged. Candidate technologies for the remaining six subcategories rely on partial recycle and physical-chemical treatment of blowdown (plus filtration for the Calcium Carbide Furnace Subcategory), which fails the cost test. No other candidate technologies have been identified and, therefore, BCT limitations are established equal to BPT for these subcategories.

This final action encompasses one change from the BCT limitations proposed in 1982. When the candidate technology for the Slag Processing Subcategory was evaluated with the 1982 proposed benchmarks, it passed the cost test, and BCT limitations were proposed at a level more stringent than BPT limitations. The benchmarks in this final action are lower than the benchmarks proposed in 1982, and while the candidate technology for the Slag Processing Subcategory still passes the POTW test, it fails the industry cost test. Therefore, BCT limitations are established at a less stringent level of control than was proposed (i.e., equal to BPT instead of equal to BAT).

11. Glass Manufacturing (40 CFR Part 426)

Two of the 13 subcategories (Sheet Glass and Rolled Glass) have BCT and BPT requirements based on zero discharge already in effect; those subcategories remain unchanged by this final action. Candidate technologies for eight other subcategories are as follows. For the Plate Glass Subcategory, the candidate technology is effluent recycle and sand filtration. For Float Glass, Automotive Glass Tempering, and Automotive Glass Laminating, the candidate technology is diatomaceous earth filtration. For the Glass Container Subcategory, the technology is recirculation of cullet quench water, dissolved air flotation, and

diatomaceous earth filtration of the blowdown. The candidate technology for Glass Tubing is the same as for Glass Container without dissolved air flotation. For the Television Picture Tube Envelope Subcategory, the candidate technology is sand filtration. For the Incandescent Lamp Envelope Subcategory, the technology is sand filtration for frosting wastewaters and diatomaceous earth filtration of the cullet quench water. These technologies fail the BCT cost test, and no other candidate technology has been identified. For these reasons, BCT limitations were proposed and are now established equal to BPT for those eight subcategories.

For the Insulation Fiberglass Subcategory, BPT requirements are based on zero discharge with specific limitations on the discharge of conventional pollutants from wet air pollution control devices. The candidate BCT technology is zero discharge from all sources, including air pollution control devices. The Agency lacks sufficient data to quantitatively evaluate the candidate BCT technology with the BCT cost test. However, based on estimates of the incremental cost of additional flow restrictions (which are crucial to the candidate technology), the Agency believes the candidate technology is not cost reasonable and is establishing BCT limitations equal to BPT.

In the Hand Pressed and Blown Glass Subcategory, there are no BPT effluent limitations for any pollutants. The Agency is considering proposing BPT regulations that would result in a nationally applicable base level of treatment being required for this subcategory. Effluent limitations based on BCT will be evaluated at the same time. Therefore, BCT limitations for the Hand Pressed and Blown Glass Subcategory are being removed and reserved. This rulemaking also includes revisions to the BAT limitations for the Hand Pressed and Blown Glass Subcategory and the Incandescent Lamp Envelope Subcategory. The corrections remove conventional pollutant limitations from the BAT sections in those subcategories.

The remaining subcategory, Machine Pressed and Blown Glass Manufacturing, has been reserved. No regulations are currently in effect, and no action is taken with regard to BCT limitations.

12. Asbestos Manufacturing (40 CFR Part 427)

One of the 11 subcategories, Solvent Recovery, has BCT limitations equal to BPT already in effect. No other technology for removing conventional pollutants has been identified, and the existing BCT limitations for this subcategory are not affected by this rulemaking. For the remaining ten subcategories, no action is being taken with respect to BCT limitations. BCT limitations have not been proposed for any of these ten subcategories, and therefore, none are established at this time.

13. Meat Products (40 CFR Part 432)

The original BAT limitations for eight of the ten subcategories in this category were based on nitrification. Those BAT limitations were subsequently withdrawn, pending a review of the feasibility of that technology. The Agency concluded that biological nitrification was not a suitable technology basis for BCT. One significant factor is that nitrification effects removal of ammonia nitrogen from these wastewaters, but affords only small removals of conventional pollutants beyond BPT levels. Further, a key part of the former BAT limitations was reduction in water use in meat processing operations, which may not be achievable in many plants. Finally, preliminary results of the technology review indicated that consistent, year-round removal of conventional pollutants beyond BPT is technically achievable only with extraordinary operational care. For these reasons, EPA has rejected nitrification as the basis for BCT. No other technologies have been identified, and BCT limitations are therefore established equal to BPT for the eight subcategories.

For the remaining two subcategories, Small Processors and Renderers, the candidate technology is in-plant controls (the former BAT). This technology passes the BCT cost test, and BCT limitations are established at the BAT level of control. For both subcategories, the incremental costs associated with the former BAT limitations are minimal. The Agency concluded that these costs were reasonable and proposed, and now promulgates, BCT limitations accordingly. The Agency did not receive any comments objecting to the proposed level of control.

14. Mineral Mining and Processing (40 CFR Part 436)

This category contains 38 subcategories; 17 have no regulations in effect; the remainder have BPT regulations only. While some of the BPT regulations are based on zero discharge of process wastewater pollutants, the Agency has not yet proposed any BCT limitations for this category. This final rulemaking does not contain regulations for any of the subparts of this category.

VI. Anti-Backsliding

In order to implement the Clean Water Act goal of continued further progress toward eliminating pollutant discharges, EPA established an "anti-backsliding" policy reflected in the NPDES regulations at 40 CFR 122.44(1). *See U.S. Steel v. Train* 556 F.2d 822, 842 (7th Cir., 1977). Generally, this provision prohibited the reissuance of an NPDES permit with limitations, standards, and conditions less stringent than those in the previous permit. However, the NPDES regulations contained an exception to this anti-backsliding policy at 40 CFR 122.44(1)(2)(iii) for subsequently promulgated effluent limitations guidelines based on BCT. In September 1984, the Agency revised several other parts of the NPDES rules. In that revision, EPA recognized that the BCT exception is inconsistent with the general intent of the anti-backsliding policy (49 FR 37998 and 38021, September 26, 1984). The Agency agreed with a commenter's statement that BCT effluent limitations must in all cases be at least as stringent as BPT effluent limitations, whether those BPT limitations are included in a guideline or are in a permit based on best professional judgment (BPJ). Therefore, the preamble to the 1984 NPDES rule noted that EPA would assess the need to correct the anti-backsliding policy in conjunction with issuance of a final BCT methodology.

There may be cases where BPJ permits are more stringent than BCT effluent limitations. Thus, EPA intends to propose amendments to 40 CFR 122.44(1) to correct the anti-backsliding regulations and remove the exception concerning BCT effluent limitations.

VII. Availability of Fundamentally Different Factors Variances

Upon promulgation of this regulation, the appropriate effluent limitations must be applied in all Federal and State NPDES permits thereafter issued to direct dischargers. For BCT limitations, the only exception to the binding limitation is EPA's "fundamentally different factors" (FDF) variance. The FDF variance recognizes factors concerning a particular discharger that are fundamentally different from the factors considered in this rulemaking. However, the economic ability of the individual operator to meet the compliance cost for BCT is not a consideration for granting a variance. *See National Crushed Stone Association v. EPA* 449 U.S. 64 (1980) (Evaluating

FDF variances from BPT). *See also* the NPDES regulations at 40 CFR Part 125, Subparts A and D (45 FR 14166 et seq., April 1, 1983) for the text and explanation of the FDF variance.

This rulemaking references the availability of the FDF variance in each section where the Agency is establishing BCT effluent limitations guidelines. Some prior BCT regulations that are not changed by today's rulemaking did not specifically cross reference the FDF variance provision. Under the terms of the FDF regulations, the FDF variance is available for all BCT effluent limitations regardless of whether or not the text of a BCT regulation specifically indicates the availability of FDF variances.

VIII. Regulatory Analysis Requirements

A. Regulatory Flexibility Analysis

Pub. L. 96–354 requires EPA to prepare a Regulatory Flexibility Analysis for regulations that have a significant impact on a substantial number of small entities. This analysis may be prepared in conjunction with or as part of other Agency analysis. In support of previous rulemakings for the industries covered by today's regulation, EPA conducted analyses to evaluate the impacts on small entities. No potential for significant impact was projected. An exception to this conclusion is for the seafoods industry, where an economic analysis projected significant economic impact for certain small plants (See Section IV). EPA is setting BCT effluent limitations equal to BPT effluent limitations for these plants; therefore, there is no incremental effect associated with this regulation for these small plants.

No new significant impacts on small businesses are expected as a result of today's final regulation. Therefore, a formal Regulatory Flexibility Analysis is not required. The previous analyses and small business definitions are included in the record.

B. Regulatory Impact Analysis

Executive Order 12291 requires EPA and other agencies to perform regulatory impact analyses of major regulations. Major rules impose an annual cost to the economy of $100 million or more or meet certain other economic impact criteria specified in the Order. The expected cost of today's regulation on industry is significantly less than $100 million per year, and none of the other criteria are met. This action, therefore, is not a major regulation as defined by E.O. 12291 and no Regulatory Impact Analysis is required. For future BCT rulemakings, the Agency will again consider whether the final BCT effluent limitations represent a major regulation in light of the cost and impact to the specific industry.

IX. Response to Major Comments

EPA received public comments on the October 1982 proposal from 44 industrial concerns (firms and trade associations) and one state environmental protection agency. All comments were carefully considered and appropriate changes adopted whenever data and information supported those changes. Five methodological changes to the proposal were highlighted in the 1984 notice of data availability. The Agency received comments from 17 parties concerning the BCT methodology in response to the September 1984 notice. Five issues from those comments are addressed below. All of the comments on the 1982 proposal and the 1984 notice and our detailed responses are included in two documents: "BCT Comments and Responses—Proposed Methodology and Limitations" and "Response to Comments, BCT Notice of Data Availability." Both documents are included in the record for this rulemaking. The remainder of this section presents the most significant comments received on the 1982 proposal and 1984 notice and our responses.

A. Major Comments from the 1982 Proposed Rule

1. Use of Advanced Secondary Treatment

Comment: Commenters questioned the use of the incremental costs of secondary to advanced secondary treatment as the basis for developing the POTW benchmark. Specific comments regarding the use of advanced secondary treatment focused on statutory authority and Congress' intentions with respect to the methodology.

Response: The criticisms of using advanced secondary treatment were initially raised prior to the 1982 proposal. In fact, many of these criticisms were raised when EPA published the 1979 BCT methodology and were specifically rejected by the U.S. Court of Appeals for the Fourth Circuit in *American Paper Institute* v. *EPA* 60 F.2d 954 (4th Cir. 1981). While the Clean Water Act does not mention advanced secondary treatment in reference to BCT, the Court of Appeals accepted its use in this context.

The final BCT methodology continues to rely on the same comparison as was proposed; that is, an industry's cost to control conventional pollutants beyond BPT is compared to a POTW cost for control beyond secondary treatment. The cost basis for industry is the increment between BPT and BCT; the cost basis for POTWs is the increment between secondary treatment and advanced secondary treatment. While the 1981 court decision affirmed EPA's choice of analyzing costs beyond the secondary treatment level, some commenters observed that the repeal of section 301(b)(2)(B) of the Clean Water Act affected EPA's statutory authority for relying on the cost of advanced secondary treatment in the BCT methodology since it was section 301(b)(2)(B) that had required POTWs to achieve treatment beyond secondary. The Agency believes, however, that the increment of secondary treatment to advanced secondary treatment is both correct and consistent with the statute. As stated in the August 29, 1979 final regulation (44 FR 50735) and in Section III.A above, there remain three reasons for EPA's choice of the secondary to advanced secondary increment. First, this increment yields an approximation of marginal costs at secondary treatment. Second, advanced secondary treatment is the "knee-of-the-curve" with respect to POTW costs. Finally, the level of treatment for a POTW to upgrade from secondary to advanced secondary treatment roughly parallels the industrial increment under consideration.

In order to compare the benchmark to an industry's cost of removing additional pounds of conventional pollutants, the benchmark and industry cost must be evaluated consistently. The final BCT methodology achieves this analytical consistency with the parallel between secondary treatment for POTWs and the BPT level of control for industrial dischargers. The treatment technology is often similar, the level of pollutant reduction is often similar, and the level of regulatory control is similar in that both secondary treatment and BPT represent a minimum level of control. The BCT methodology then poses a question of whether to control conventional pollutants beyond this minimum level; i.e., "beyond BPT." Therefore, the comparison to the POTW cost should also reflect control beyond the minimum level; i.e., "beyond secondary."

2. Weighting of POTW Flows

Comment: Some commenters criticized the flow-weighting scheme used in the proposal and suggested alternative approaches. Other commenters stated that those criticisms were unfounded and supported the Agency's use of a flow-weighted average cost per pound and also

supported the Agency's proposed weighting scheme.

Response: The Agency evaluated alternative approaches to a weighting scheme and concluded that none were appropriate. For example, weighting by total incremental costs for each scale of POTWs would weight the high cost plants more heavily simply because they have high costs, rather than because they remove large amounts of pollutants. Another alternative, weighting by total incremental pounds, produced similar results to the approach the Agency proposed. A third suggestion, weighting both flow and the number of POTW, heavily weights the smaller POTWs and biases the incremental costs upwards. This result is also not representative of the expenditures made on POTWs.

The Agency's overall response is that the proposed flow-weighting scheme is appropriate in terms of representing various sizes of POTWs, is more reliable than using cost data for a single point, and correctly corresponds to the approach used to estimate industry costs. Therefore, use of the proposed flow-weighting scheme is maintained in the final methodology.

3. Establishing a Benchmark for the Second Test

Comment: Several commenters responded to the Agency's solicitation regarding an appropriate measure for the industry cost test benchmark. Some of these comments supported the concept of elasticity of unity (using a benchmark of 1.0) as a more appropriate measure than the increasing cost ratio.

Response: The Agency disagrees with comments that the elasticity of unity should be applied because it has no significant bearing on determining cost-effectiveness, which is the objective of the second test. Further, from a practical point of view, as mentioned in the comments, EPA does not have enough data to use the elasticity of unity approach. For almost all of the secondary industries, the Agency has cost and pollutant removal data for only one BCT candidate technology (generally the original BAT technology). As a consequence, it is not possible to identify the point where elasticity is one. The basis for the second test benchmark in the final methodology remains the increasing cost ratio. Most of the comments received on this issue were not opposed to the Agency's approach.

4. POTW Cost Data

Comment: Some comments received in response to the 1982 proposal plus comments received in response to a subsequent notice concerning POTW cost data (48 FR 24742, June 2, 1983) criticized EPA's use of actual POTW costs in deriving POTW cost curves. Commenters believed that site-specific factors dwarfed the cost differentials associated with improving POTW effluent performance from secondary to advanced secondary treatment. Substantial concerns were expressed with regard to the validity of the POTW cost data.

Response: For the 1982 proposal, the Agency based its estimates of POTW costs on actual plants' experiences regarding the costs of constructing and operating POTWs. In 1983, more up-to-date information of a similar nature was available, and the Agency issued a notice indicating its intentions to use the new data as the basis for calculating the benchmarks.

Following that notice, the Agency became aware that the new data might not be appropriate for use in the BCT methodology. The Agency's analysis of the new data was prompted, in part, by comments from the industry. The costs of secondary and advanced secondary treatment, as derived from the new data, varied substantially due to site-specific factors. The resulting incremental costs were determined to be unsuitable for use in the BCT methodology. The Agency also realized that the data used in the 1982 proposal might be subject to similar problems. Consequently, the new data were withdrawn, and after further evaluation, the Agency concluded it was necessary to use a different data source for POTW costs. The selected approach was to develop model POTW costs. The Agency presented the model POTW costs in detail in the September 1984 notice. Comments concerning that notice are presented below (under Heading B.)

5. Choice of Effluent Level to Define Advanced Secondary Treatment

Comment: One commenter stated that the selection of 10 mg/l as the achievable concentration for both BOD and TSS (the level proposed in 1982) was not representative of POTW performance at advanced secondary treatment. The same commenter also noted that the operational definition of advanced secondary treatment has been described in EPA documents as ranging from 10 mg/l to 25 mg/l for both BOD and TSS, rather than as a single, legally defined value, such as 30 mg/l is for secondary treatment. An industry organization submitted a rebuttal comment, asserting that there was no need for EPA to change the definition of advanced secondary treatment.

Response: EPA re-examined the data and is now defining advanced secondary treatment as a maximum 30-day average concentration of 20 mg/l BOD and 20 mg/l TSS. EPA indicated its intent to use this definition in the 1984 notice and received supportive comments. EPA believes this level represents typical permit limitations for advanced secondary facilities and has applied this definition to several aspects of the methodology. First, EPA applied this definition to the design specifications for estimating POTW costs. Second, when estimating the long-term performance for advanced secondary POTWs, EPA included a permit limitation of 20 mg/l BOD in the editing criteria.

The Agency recognizes there is no single, generally-accepted definition for advanced secondary treatment as there is for secondary treatment. EPA's analysis of actual permit data showed that 20 mg/l BOD is the most common permit requirement for POTWs beyond secondary treatment. The Agency believes that concentrations of 20 mg/l BOD and TSS represent the best definition of advanced secondary treatment for purposes of the BCT methodology.

When the Agency changed its approach for estimating POTW costs, these comments concerning the definition of advanced secondary treatment became less relevant. For the proposal in 1982, a change in definition alone would affect the calculation of incremental pollutant removals and the resulting benchmarks. For the final methodology, where the model POTWs reflect specific treatment systems for specific performance levels, the calculation of pollutant removals is affected by both definition and cost. Therefore, the computational "side-effects" of changing the definition are very different than would have been true when this comment was originally made.

6. Use of Pre-BPT and Pre-Secondary Treatment Levels

Comment: Various industry commenters complained that EPA's inconsistent definition of pre-BPT treatment levels would result in inconsistent BCT calculations. They noted that these inconsistencies would lead to misleading conclusions regarding the cost per pound of pollutant removed for BPT and would bias the industry cost test against certain industries.

In selecting the previous pre-BPT levels for industrial categories and subcategories, EPA attempted to choose treatment levels existing at the time BPT effluent limitations guidelines were developed. Commenters criticized the subjectivity involved in selecting this treatment level. They also pointed out that this "treatment-in-place" level

could not be developed for all industry categories, forcing EPA to assume no treatment for some industries. By using both "treatment-in-place" and "no treatment," EPA introduced inconsistencies and biases that were based either on whether an industry had substantially complied with BPT effluent limitations guidelines before their promulgation or on the availability of data to conduct the calculations. Commenters asserted that these factors should not be a consideration in determining the stringency of BCT effluent limitations guidelines. Commenters suggested two ways to improve the computation. First, some commenters suggested that EPA collect new data to employ the "treatment-in-place" method for all industry categories. Second, other commenters suggested that EPA base all pre-BPT calculations on raw waste (i.e., no treatment).

Response: EPA agrees with the criticisms and is therefore establishing the pre-BPT treatment level for all industry categories as raw waste. EPA also recognizes that the primary treatment level for POTWs that was used in the proposal cannot be considered equivalent to raw waste for industry. Therefore, EPA is using raw waste as the pre-secondary treatment level for POTW cost and pollutant reduction calculations. These changes were presented in the 1984 notice and are maintained in the final BCT methodology. EPA concludes that a consistent application of raw waste as the "starting point" for both industry and POTW calculations addresses the commenters' concerns.

7. Use of Long-Term Average Effluent Concentrations

Comment: The Agency received several comments opposing the use of 30-day maximum effluent limitations in pollutant removal calculations. Commenters claimed that the use of 30-day limitations biases the test against industries whose "variability factors" are larger than those for POTWs. A "variability factor" is the ratio of the 30-day maximum effluent limitation to a long-term effluent concentration. The use of 30-day maximum limitations was said to bias the test against the industry by overstating the number of incremental pounds of pollutants removed by BCT.

For industry calculations, the commenters also noted that EPA based removals on 30-day limitations for the BPT and BCT levels, while using long-term averages for pre-BPT levels (both treatment-in-place and raw wasteload). Commenters asserted that this biased the dollar per pound calculations for both the BPT and BCT incremental treatment levels. The calculation overstates the actual pounds removed in going from BPT to BCT, and understates the actual pounds removed in going from pre-BPT to BPT.

Commenters suggested several ways to correct these biases. The suggestions focused on the long-term data.

Response: EPA recognizes the merits of these comments and has changed the industry and benchmark calculations as follows. For industry calculations, EPA is using annual average effluent levels (which are considered long-term) for raw waste, BPT, and BCT. For POTW calculations, EPA uses annual average effluent levels for raw waste, secondary treatment, and advanced secondary treatment. In summary, the long-term average effluent concentrations are applied at all treatment levels for both industry and POTW calculations. This approach was presented in the 1984 notice, was supported by commenters (see Comment No. 11, below), and is maintained in the final BCT methodology.

An exception to using long-term average concentrations occurs for many of the secondary industries, where, due to data constraints, EPA can only conduct the industry calculations at BPT and BCT levels using the 30-day maximum limitations. To reduce the possible bias that would exist if these secondary industry calculations were compared to BCT benchmarks based on long-term averages, EPA established a second tier of benchmarks that correspond to the industry calculations. These second tier benchmarks are based on 30-day limitations for secondary and advanced secondary treatment. This solution was presented in the 1984 notice and did not receive opposition. The two-tier approach is maintained in the final methodology.

To summarize, using long-term average concentrations is the preferred approach. The benchmarks in this final rulemaking are derived from long-term effluent data. Industry calculations will also be based on long-term effluent data. When the preferred approach is not feasible due to limitations on long-term data (as is true for many of the secondary industries), a second tier of benchmarks will be applied so that the BCT cost test is conducted on a consistent basis.

B. Major Comments From the 1984 Notice of Data Availability

8. Variation Among the Model Plant Cost Estimates

Comment: Commenters questioned the reliability and accuracy of the POTW cost estimates due to the variation in results. Costs from the three engineering firms were to be based on the same basic design criteria, but the commenters found the variation in results to be inexplicable. The comments also argued that the Agency's estimates of the incremental cost to reach advanced secondary treatment were much too high.

Response: The Agency provided limited design specifications on size, general operating conditions, required effluent levels, and basic treatment processes to three engineering design firms with experience in POTW development. Specific design criteria were determined by each firm to take maximum advantage of their experience and expertise. EPA did not want to prejudice the end result by providing overly detailed directions to the design firms.

One reason for the large variation among the incremental total annual costs was one firm's design assumption regarding the use of alum in the chemical addition step for advanced secondary treatment. While the addition of alum does reduce the level of solids in the final effluent, alum addition greatly increases the sludge handling requirements with a corresponding increase in cost. Alum is generally used to remove phosphorus. The Agency concluded that addition of alum is not the most appropriate choice for the model POTWs to be used in the BCT methodology. The more common chemical additive is polymer, which was chosen by the two other design firms. The general design criteria were adjusted by specifying that chemical addition be the addition of a polymer.

Other corrections and minor revisions were also made as a result of comments on specific engineering assumptions. The variation among incremental total annual costs in the current estimates is much smaller than the variation in costs in the September 1984 notice. For example, in the 1984 notice, the incremental total annual costs for the 25 mgd model POTW ranged from $0.40 million to $1.53 million. The current estimates used in today's regulation range from $0.34 million to $0.48 million. In addition, the average incremental costs (which are the values used in the benchmark calculations) are

significantly lower than the average incremental costs in the 1984 notice.

9. Use of Planning Level Estimates in Benchmark Calculations

Comment: Some commenters encouraged inclusion of "planning level" estimates for the large model POTWs. Their arguments claimed the planning level estimates are no less accurate than the design estimates.

Response: In addition to the design estimates provided by three firms, EPA directed a fourth engineering firm to develop planning level estimates. Two sources of information were used for the planning level estimates: available planning level cost curves and the CAPDET cost estimating computer program.

Planning level estimates are typically used by engineers during preliminary analyses of a wide range of alternatives. Their greatest application is as a screening tool, whereby alternatives having obviously high costs are eliminated from further analysis. The accuracy of planning level estimates is typically within 30 percent of the final cost of a project, while for design estimates, accuracy is in the range of 10 to 15 percent. The Agency obtained detailed design cost estimates for the large POTW sizes because the incremental cost implication for upgrading large facilities is of much greater significance than for upgrading small facilities due to the flow-weighting factors assigned in the benchmark calculations. The planning level estimates were prepared for all five sizes of model POTWs, but they were used only for the two smallest sizes. The calculations for the three larger sizes continue to be based solely on the design estimates.

10. Presentation of Data in Engineering Reports

Comment: Some commenters claimed that the level of detail provided in the engineering reports was inadequate. The reports were further criticized for their lack of design drawings. The commenters claimed the presentation of data precluded adequate review by the public, and they urged further disclosure of background information and a reopening of the comment period.

Response: The reports from the design firms all followed a similar format for presentation of information. Treatment systems and costs were described for each POTW; the amount of detail provided was substantial for structures and equipment. Similarly, the assumptions and costs for operating and maintenance were presented in detail. In response to the lack of drawings, the Agency notes that it is standard engineering practice to develop detailed design drawings to fit particular sites. The hypothetical nature of the model POTWs makes preparation of drawings (other than general sketches of equipment arrangement or to prepare construction quantity estimates) inappropriate.

EPA firmly believes that the information needed to analyze the contractors' work was available. We do not believe that additional information was necessary to review or evaluate the cost estimates; reopening the 105-day comment period was not necessary.

11. Appropriateness of Long-Term Average Concentrations

Comment: Commenters believe the Agency incorrectly calculated long-term average effluent concentrations for POTW treatment levels. Specifically, their criticism focused on the choice of POTWs included in the performance analysis. Commenters asserted that problems with the editing criteria resulted in an incorrect assessment of incremental pollutant removals.

Response: It is important to note that commenters generally supported the use of long-term averages instead of maximum 30-day limitations, which had previously been used in the methodology. Also, they generally supported the Agency's use of the POTW performance data base. Their objections focused on the specific values that were identified as the long-term average concentrations. EPA recognized that some of the commenters' concerns warranted additional analyses, which have since been conducted and are discussed in Section III.D.

The editing criteria specify a permit limitation and the conditions for complying with the limitation. The Agency revised the editing rule on violations to allow both pollutants to exceed the permit requirement if that situation occurs in the same month; this revision accounts for the relationship between the pollutants. Editing criteria were also added to better define the treatment systems for secondary and advanced secondary treatment POTWs. Further, the criteria now exclude POTWs that were performing at levels much better than would be characteristic of secondary and advanced secondary treatment. The revised editing criteria, which respond to the commenters' concerns, were used to calculate the long-term averages for the final benchmarks.

12. Reproposing BCT Methodology and Effluent Limitations Guidelines

Comment: Several commenters submitted procedural objections to the notice of data availability. They claimed that the changes in the September 1984 notice were significant enough departures from the October 1982 proposal to warrant reproposal of the methodology and effluent limitations guidelines.

Response: The changes presented in the September 1984 notice were all in response to, and were logical outgrowths of, comments submitted on the October 1982 proposal. As an example, one commenter had strongly criticized the empirical cost data that were being considered; this comment influenced the Agency's decision to develop model POTW costs.

The comments concerning reproposal emphasized the need for meaningful comment. EPA believes this need has adequately been met. When the September 1984 notice was published, the Agency notified all parties who submitted comment on the earlier proposal, making a special effort to give them opportunity to comment on the new information. This opportunity was further facilitated by a 45-day extension to the comment period. Also, the major commenters from October 1982 all submitted further comments in September 1984. Therefore, EPA believes that all interested parties had ample opportunity to submit meaningful comments and that reproposal is not necessary.

X. Availability of Technical Information

The costs and pollutant removal data that were used to support the industry calculations for the secondary industries were taken from the development documents and economic analyses that were published in the development of BAT effluent limitations guidelines. These documents are available for review as part of the record for this rulemaking (in EPA's library) and at all EPA regional libraries.

POTW cost data used to calculate the final benchmarks are documented in reports from each of the engineering firms that provided model POTW cost estimates. Those costs, the benchmark calculations, and results are presented in an additional report, "BCT Benchmarks: Methodology, Analysis and Results." All of these documents are available for review as part of the record in EPA's library.

XI. OMB Review

This regulation was submitted to the Office of Management and Budget for

review as required by Executive Order 12291. This rule does not contain any information collection requirements subject to the Paperwork Reduction Act of 1980 (44 U.S.C. 3501 et seq.). Comments from OMB to EPA and EPA's responses are available for public inspection as part of the record for this rulemaking.

List of Subjects

40 CFR Part 405

Dairy products, Water pollution control, Waste treatment and disposal.

40 CFR Part 406

Grains, Water pollution control, Waste treatment and disposal.

40 CFR Part 407

Fruits, Vegetables, Water pollution control, Waste treatment and disposal.

40 CFR Part 408

Seafood, Water pollution control, Waste treatment and disposal.

40 CFR Part 409

Sugar, Water pollution control, Waste treatment and disposal.

40 CFR Part 411

Cement industry, Water pollution control, Waste treatment and disposal.

40 CFR Part 412

Feedlots, Livestock, Water pollution control, Waste treatment and disposal.

40 CFR Part 418

Fertilizers, Water pollution control, Waste treatment and disposal.

40 CFR Part 422

Phosphate, Water pollution control, Waste treatment and disposal.

40 CFR Part 424

Iron, Metals, Water pollution control, Waste treatment and disposal.

40 CFR Part 426

Glass and glass products, Water pollution control, Waste treatment and disposal.

40 CFR Part 432

Meat and meat products, Water pollution control, Waste treatment and disposal.

Dated: May 19, 1986.

Lee M. Thomas,

Administrator.

For the reasons set out in the preamble, 40 CFR Parts 405, 406, 407, 408, 409, 411, 412, 418, 422, 424, 426, and 432 are amended as follows:

1. The title of Part 405 is revised to read as follows:

PART 405—DAIRY PRODUCTS PROCESSING POINT SOURCE CATEGORY.

2. The authority citation for Part 405 is revised to read as follows:

Authority: Secs. 301, 304 (b) and (c), 306 (b) and (c) and 307(c) of the Federal Water Pollution Control Act, as amended (the Act); 33 U.S.C. 1251, 1311, 1314 (b) and (c), 1316 (b) and (c), and 1317(c); 86 Stat. 816, et seq., Pub. L. 92-500; 91 Stat. 1567, Pub. L. 95-217.

§§ 405.17, 405.27, 405.37, 405.47, 405.57, 405.67, 405.77, 405.87, 405.97, 405.107, 405.127 [Added]

§ 405.117 [Revised]

3. Sections 405.17, 405.27, 405.37, 405.47, 405.57, 405.67, 405.77, 405.87, 405.97, 405.107, and 405.127 are added, and § 405.117 is revised. The text of each section is identical except for the section number in the heading and the section number referenced at the end of the section. The text of the sections is set out only once. Within the text are two blank spaces, one designated (a) and one designated (b). In the table preceding the text, column (a) indicates the section number to be added to the section heading for the respective subparts of Part 405. Column (b) indicates the section number to be added to the text of the section indicated in column (a).

Subpart	(a) Section number to be added to section heading	(b) Section number to be added to text of the section in (a)
Subpart A—Receiving stations subcategory	405.17	405.12
Subpart B—Fluid products subcategory	405.27	405.22
Subpart C—Cultured products subcategory	405.37	405.32
Subpart D—Butter subcategory	405.47	405.42
Subpart E—Cottage cheese and cultured cream cheese subcategory	405.57	405.52
Subpart F—Natural and processed cheese subcategory	405.67	405.62
Subpart G—Fluid mix for ice cream and other frozen desserts subcategory	405.77	405.72
Subpart H—Ice cream, frozen desserts, novelties and other dairy desserts subcategory	405.87	405.82
Subpart I—Condensed milk subcategory	405.97	405.92
Subpart J—Dry milk subcategory	405.107	405.102
Subpart K—Condensed whey subcategory	405.117	405.112
Subpart L—Dry whey subcategory	405.127	405.122

§ (a) Effluent limitations guidelines representing the degree of effluent reduction attainable by the application of the best conventional pollutant control technology (BCT).

Except as provided in §§ 125.30 through 125.32, any existing point source subject to this subpart shall achieve the following effluent limitations representing the degree of effluent reduction attainable by the application of the best conventional pollutant control technology (BCT): The limitations shall be the same as those specified for conventional pollutants (which are defined in § 401.16) in § *(b)* of this subpart for the best practicable control technology currently available (BPT).

PART 406—GRAIN MILLS POINT SOURCE CATEGORY

1. The authority citation for Part 406 is revised to read as follows:

Authority: Secs. 301, 304 (b) and (c), 306 (b) and (c), 307(c) of the Federal Water Pollution Control Act, as amended; 33 U.S.C. 1251, 1311, 1314 (b) and (c), 1316 (b) and (c), 1317(c); 86 Stat. 816 et seq., Pub. L. 92-500; 91 Stat. 1567, Pub. L. 95-217.

§§ 406.27, 406.67, 406.97, 406.107 [Added]

§§ 406.37, 406.47, 406.57, 406.77, 406.87 [Revised]

2. Sections 406.27, 406.67, 406.97, and 406.107 are added, and §§406,37, 406.47, 406.57, 406.77, and 406.87 are revised. The text of each section is identical except for the section number in the heading and the section number referenced at the end of the section. The text of the sections is set out only once. Within the text are two blank spaces, one designated (a) and one designated (b). In the table preceding the text, column (a) indicates the section number to be added to the section heading for the respective subparts of Part 406. Column (b) indicates the section number to be added to the text of the section indicated in column (a).

Subpart	(a) Section number to be added to section heading	(b) Section number to be added to text of the section in (a)
Subpart B—Corn dry milling subcategory	406.27	406.22
Subpart C—Normal wheat flour milling subcategory	406.37	406.32
Supart D—Bulgur wheat flour milling subcategory	406.47	406.42
Subpart E—Normal rice milling subcategory	406.57	406.52
Subpart F—Parboiled rice processing subcategory	406.67	406.62
Subpart G—Animal feed subcategory	406.77	406.72
Subpart H—Hot cereal subcategory	406.87	406.82
Subpart I—Ready-to-eat cereal subcategory	406.97	406.92
Subpart J—Wheat starch and gluten	406.107	406.102

§ (a) Effluent limitations guidelines representing the degree of effluent reduction attainable by the application of the best conventional pollutant control technology (BCT).

Except as provided in §§ 125.30 through 125.32, any existing point source subject to this subpart shall achieve the following effluent limitations representing the degree of effluent reduction attainable by the application of the best conventional pollutant control technology (BCT): The limitations shall be the same as those specified for conventional pollutants (which are defined in § 401.16) in § (*b*) of this subpart for the best practicable control technology currently available (BPT).

PART 407—CANNED AND PRESERVED FRUITS AND VEGETABLES PROCESSING POINT SOURCE CATEGORY

1. The authority citation for Part 407 is revised to read as follows:

Authority: Secs. 301, 304 (b) and (c), 306 (b) and (c), 307(c) of the Federal Water Pollution Control Act, as amended; 33 U.S.C. 1251, 1311, 1314 (b) and (c), 1316 (b) and (c), 1317(c); 86 Stat. 816 et seq., Pub. L. 92-500; 91 Stat. 1567, Pub. L. 95-217.

§§ 407.17, 407.27, 407.47 [Revised]

§§ 407.37, 407.57, 407.67, 407.77, 407.87 [Added]

2. Sections 407.17, 407.27, and 407.47 are revised, and §§ 407.37, 407.57, 407.67, 407.77, and 407.87 are added. The text of each section is identical except for the section number in the heading and the section number referenced at the end of the section. The text of the sections is set out only once. Within the text are two blank spaces, one designated (a) and one designated (b). In the table preceding the text, column (a) indicates the section number to be added to the section heading for the respective subparts of Part 407. Column (b) indicates the section number to be added to the text of the section indicated in column (a).

Subpart	(a) Section number to be added to section heading	(b) Section number to be added to text of the section in (a)
Subpart A—Apple juice subcategory	407.17	407.12
Subpart B—Apple products subcategory	407.27	407.22
Subpart C—Citrus products subcategory	407.37	407.32
Subpart D—Frozen potato products subcategory	407.47	407.42
Subpart E—Dehydrated potato products subcategory	407.57	407.52
Subpart F—Canned and preserved fruits subcategory	407.67	407.62
Subpart G—Canned and preserved vegetable subcategory	407.77	407.72
Subpart H—Canned and miscellaneous specialties subcategory	407.87	407.82

§ (a) Effluent limitations guidelines representing the degree of effluent reduction attainable by the application of the best conventional pollutant control technology (BCT).

Except as provided in §§ 125.30 through 125.32, any existing point source subject to this subpart shall achieve the following effluent limitations representing the degree of effluent reduction attainable by the application of the best conventional pollutant control technology (BCT): The limitations shall be the same as those specified for conventional pollutants (which are defined in § 401.16) in § (b) of this subpart for the best practicable control technology currently available (BPT).

PART 408—CANNED AND PRESERVED SEAFOOD PROCESSING POINT SOURCE CATEGORY

1. The authority citation for Part 408 is revised to read as follows:

Authority: Secs. 301, 304 (b) and (c), 306 (b) and (c), 307(c), of the Federal Water Pollution Control Act, as amended; 33 U.S.C. 1251, 1311, 1314 (b) and (c), 1316 (b) and (c), 1317(c); 86 Stat. 816 et seq., Pub. L. 92-500; 91 Stat. 1567, Pub. L. 95-217.

§§ 408.17, 408.27, 408.37, 408.47, 408.57, 408.67, 408.77, 408.87, 408.97, 408.107, 408.117, 408.127, 408.137, 408.147, 408.157, 408.177, 408.187, 408.197, 408.217, 408.227, 408.237, 408.247, 408.277, 408.287, 408.317, 408.327 [Added]

2. Sections 408.17, 408.27, 408.37, 408.47, 408.57, 408.67, 408.77, 408.87, 408.97, 408.107, 408.117, 408.127, 408.137, 408.147, 408.157, 408.177, 408.187, 408.197, 408.217, 408.227, 408.237, 408.247, 408.277, 408.287, 408.317, and 408.327 are added. The text of each section is identical except for the section number in the heading and the section number referenced at the end of the section. The text of the sections is set out only once. Within the text are two blank spaces, one designated (a) and one designated (b). In the table preceding the text, column (a) indicates the section number to be added to the section heading for the respective subparts of Part 408. Column (b) indicates the section number to be added to the text of the section indicated in column (a).

Subpart	(a) Section number to be added to section heading	(b) Section number to be added to text of the section in (a)
Subpart A—Farm-raised catfish processing subcategory	408.17	408.12
Subpart B—Conventional blue crab processing subcategory	408.27	408.22
Subpart C—Mechanized blue crab processing subcategory	408.37	408.32
Subpart D—Non-remote Alaskan crab meat processing subcategory	408.47	408.42
Subpart E—Remote Alaskan crab meat processing subcategory	408.57	408.52
Subpart F—Non-remote Alaskan whole crab and crab section	408.67	408.62
Subpart G—Remote Alaskan whole crab and crab section processing subcategory	408.77	408.72
Subpart H—Dungeness and Tanner crab processing in the contiguous states subcategory	408.87	408.82
Subpart I—Non-remote Alaskan shrimp processing subcategory	408.97	408.92
Subpart J—Remote Alaskan shrimp processing subcategory	408.107	408.102
Subpart K—Northern shrimp processing in the contiguous states subcategory	408.117	408.112
Subpart L—Southern non-breaded shrimp processing in the contiguous states subcategory	408.127	408.122
Subpart M—Breaded shrimp processing in the contiguous states subcategory	408.137	408.132
Subpart N—Tuna processing subcategory	408.147	408.142
Subpart O—Fish meal processing subcategory	408.157	408.152
Subpart Q—Alaskan mechanized salmon processing subcategory	408.177	408.172
Subpart R—West coast hand-butchered salmon processing subcategory	408.187	408.182
Subpart S—West coast mechanized salmon processing subcategory	408.197	408.192
Subpart U—Non-Alaskan conventional bottom fish processing subcategory	408.217	408.212
Subpart V—Non-Alaskan mechanized bottom fish processing subcategory	408.227	408.222
Subpart W—Hand-shucked clam processing subcategory	408.237	408.232
Subpart X—Mechanized clam processing subcategory	408.247	408.242
Subpart AA—Steamed and canned oyster processing subcategory	408.277	408.272
Subpart AB—Sardine processing subcategory	408.287	408.282
Subpart AE—Alaskan herring fillet processing subcategory	408.317	408.312
Subpart AF—Non-Alaskan herring fillet processing subcategory	408.327	408.322

§ (a) Effluent limitations guidelines representing the degree of effluent reduction attainable by the application of the best conventional pollutant control technology (BCT).

Except as provided in §§ 125.30 through 125.32, any existing point source subject to this subpart shall achieve the following effluent limitations representing the degree of effluent reduction attainable by the application

of the best conventional pollutant control technology (BCT): The limitations shall be the same as those specified for conventional pollutants (which are defined in § 401.16 in § *(b)* of this subpart for the best practicable control technology currently available (BPT).

3. Section 408.167 is added to Subpart P to read as follows:

§ 408.167 Effluent limitations guidelines representing the degree of effluent reduction attainable by the application of the best conventional pollutant control technology.

(a) [Reserved].

(b) Except as provided in §§ 125.30 through 125.32, any hand-butchered salmon processing facility located in population or processing centers including but not limited to Anchorage, Cordova, Juneau, Ketchikan, Kodiak, and Petersburg shall achieve the following effluent limitations representing the degree of effluent reduction attainable by the application of the best conventional pollutant control technology (BCT): The limitations shall be the same as those specified for conventional pollutants (which are defined in § 401.16) in § 408.162(b)(2) of this subpart for the best practicable control technology currently available (BPT).

4. Section 408.207 is added to Subpart T to read as follows:

§ 408.207 Effluent limitations guidelines representing the degree of effluent reduction attainable by the application of the best conventional pollutant control technology.

(a) [Reserved].

(b) Except as provided in §§ 125.30 through 125.32, any Alaskan bottom fish processing facility located in population or processing centers including but not limited to Anchorage, Cordova, Juneau, Ketchikan, Kodiak, and Petersburg shall achieve the following effluent limitations representing the degree of effluent reduction attainable by the application of the best conventional pollutant control technology (BCT): The limitations shall be the same as those specified for conventional pollutants (which are defined in § 401.16) in § 408.202(b)(2) of this subpart for the best practicable control technology currently available (BPT).

5. Section 408.257 is added to Subpart Y to read as follows:

§ 408.257 Effluent limitations guidelines representing the degree of effluent reduction attainable by the application of the best conventional pollutant control technology.

Except as provided in §§ 125.30 through 125.32, the following limitations establish the quantity or quality of pollutants or pollutant properties, controlled by this section, which may be discharged by a point source subject to the provisions of this subpart after application of the best conventional pollutant control technology:

Effluent characteristic	Effluent limitations	
	Maximum for any 1 day	Average of daily values for thirty consecutive days shall not exceed—
	Metric units (kilograms per 1,000 kg of product)	
TSS	45	36
Oil and grease	2.2	1.7
pH	(1)	(1)
	English units (pounds per 1,000 lb of product)	
TSS	45	36
Oil and grease	2.2	1.7
pH	(1)	(1)

[1] Within the range 6.0 to 9.0.

6. Section 408.267 is added to Subpart Z to read as follows:

§ 408.267 Effluent limitations guidelines representing the degree of effluent reduction attainable by the application of the best conventional pollutant control technology.

Except as provided in §§ 125.30 through 125.32, the following limitations establish the quantity or quality of pollutants or pollutant properties, controlled by this section, which may be discharged by a point source subject to the provisions of this subpart after application of the best conventional pollutant control technology:

Effluent characteristic	Effluent limitations	
	Maximum for any 1 day	Average of daily values for thirty consecutive days shall not exceed—
	Metric units (kilograms per 1,000 kg of product)	
TSS	23	16
Oil and grease	1.1	0.77
pH	(1)	(1)
	English units (pounds per 1,000 lb of product)	
TSS	23	16
Oil and grease	1.1	0.77
pH	(1)	(1)

[1] Within the range 6.0 to 9.0.

7. Section 408.297 is added to Subpart AC to read as follows:

§ 408.297 Effluent limitations guidelines representing the degree of effluent reduction attainable by the application of the best conventional pollutant control technology.

(a) [Reserved].

(b) Except as provided in §§ 125.30 through 125.32, any Alaskan scallop processing facility located in population or processing centers including but not limited to Anchorage, Cordova, Juneau, Ketchikan, Kodiak, and Petersburg shall achieve the following effluent limitations representing the degreee of effluent reduction attainable by the application of the best conventional pollutant control technology (BCT): The limitations shall be the same as those specified for conventional pollutants (which are defined in § 401.16) in § 408.292(b)(2) of this subpart for the best practicable control technology currently available (BPT).

8. Section 408.307 is added to Subpart AD to read as follows:

§ 408.307 Effluent limitations guidelines representing the degree of effluent reduction attainable by the application of the best conventional pollutant control technology.

Except as provided in §§ 125.30 through 125.32, the following limitations establish the quantity or quality of pollutants or pollutant properties, controlled by this section, which may be discharged by a point source subject to the provisions of this subpart after application of the best conventional pollutant control technology:

Effluent characteristic	Effluent limitations	
	Maximum for any 1 day	Average of daily values for thirty consecutive days shall not exceed—
	Metric units (kg/kkg of product)	
TSS	5.7	1.4
Oil and grease	7.3	0.23
pH	(1)	(1)
	English units (pounds per 1,000 lb of product)	
TSS	5.7	1.4
Oil and grease	7.3	0.23
pH	(1)	(1)

[1] Within the range 6.0 to 9.0.

9. Section 408.337 is added to Subpart AG to read as follows:

§ 408.337 Effluent limitations guidelines representing the degree of effluent reduction attainable by the application of the best conventional pollutant control technology.

Except as provided in §§ 125.30 through 125.32, the following limitations establish the quantity or quality of pollutants or pollutant properties, controlled by this section, which may be discharged by a point source subject to the provisions of this subpart after application of the best conventional pollutant control technology:

Effluent characteristic	Effluent limitations	
	Maximum for any 1 day	Average of daily values for thirty consecutive days shall not exceed-
	Metric units (kg/kkg of seafood)	
TSS	26	14
Oil and grease	21	1.3
pH	(1)	(1)
	English units (pounds per 1,000 lb of seafood)	
TSS	26	14
Oil and grease	2.1	1.3
pH	(1)	(1)

1 Within the range 6.0 to 9.0.

PART 409—SUGAR PROCESSING POINT SOURCE CATEGORY

1. The authority citation for Part 409 is revised to read as follows:

Authority: Secs. 301, 304 (b) and (c), 306 (b) and (c), 307 (c) and (d), and 316(b) of the Federal Water Pollution Control Act, as amended; 33 U.S.C. 1251, 1311, 1314 (b) and (c), 1316 (b) and (c), 1317(c), and 1326(c); 86 Stat. 816 et seq., Pub. L. 92-500; 91 Stat. 1567, Pub. L. 95-217.

§§ 409.17, 409.27, 409.37 [Revised]

§§ 409.47, 409.57, 409.67, 409.77, 409.87 [Added]

2. Sections 409.17, 409.27, and 409.37 are revised, and §§ 409.47, 409.57, 409.67, 409.77, and 409.87 are added. The text of each section is identical except for the section number in the heading and the section number referenced at the end of the section. The text of the sections is set out only once. Within the text are two blank spaces, one designated (a) and one designated (b). In the table preceding the text, column (a) indicates the section number to be added to the section heading for the respective subparts of Part 409. Column (b) indicates the section number to be added to the text of the section indicated in column (a).

Subpart	(a) Section number to be added to section heading	(b) Section number to be added to text of the section in (a)
Subpart A—Beet sugar processing subcategory	409.17	409.12
Subpart B—Crystalline cane sugar refining subcategory	409.27	409.22
Subpart C—Liquid cane sugar refining subcategory	409.37	409.32
Subpart D—Louisiana raw cane sugar processing subcategory	409.47	409.42
Subpart E—Florida and Texas raw cane sugar processing subcategory	409.57	409.52
Subpart F—Hilo-Hamakua Coast of the island of Hawaii raw cane sugar processing subcategory	409.67	409.62
Subpart G—Hawaiian raw cane sugar processing subcategory	409.77	409.72
Subpart H—Puerto Rican raw cane sugar processing subcategory	409.87	409.82

§ (a) Effluent limitations guidelines representing the degree of effluent reduction attainable by the application of the best conventional pollutant control technology (BCT).

Except as provided in §§ 125.30 through 125.32, any existing point source subject to this subpart shall achieve the following effluent limitations representing the degree of effluent reduction attainable by the application of the best conventional pollutant control technology (BCT): The limitations shall be the same as those specified for conventional pollutants (which are defined in § 401.16) in § *(b)* of this subpart for the best practicable control technology currently available (BPT).

PART 411—CEMENT MANUFACTURING POINT SOURCE CATEGORY

1. The authority citation for Part 411 is revised to read as follows:

Authority: Secs. 301, 304 (b) and (c), 306 (b) and (c), and 307(c) of the Federal Water Pollution Control Act, as amended; 33 U.S.C. 1251, 1311, 1314 (b) and (c), 1316 (b) and (c), and 1317(c); 86 Stat. 816 et seq., Pub. L., 92-500; 91 Stat. 1567, Pub. L. 95-217.

2. Section 411.27 is revised to read as follows:

§ 411.27 Effluent limitations guidelines representing the degree of effluent reduction attainable by the application of the conventional pollutant control technology (BCT).

Except as provided in §§ 125.30 through 125.32, any existing point source subject to this subpart shall achieve the following effluent limitations representing the degree of effluent reduction attainable by the application of the best conventional pollutant control technology (BCT): The limitations shall be the same as those specified for conventional pollutants (which are defined in § 401.16) in § 411.22 of this subpart for the best practicable control techology currently available (BPT).

PART 412—FEEDLOTS POINT SOURCE CATEGORY

1. The authority citation for Part 412 is revised to read as follows:

Auhority: Secs. 301, 304 (b) and (c), 306 (b) and (c), and 307(c) of the Federal Water Pollution Control Act, as amended; 33 U.S.C. 1251, 1311, 1314 (b) and (c), 1316 (b) and (c), and 1317(c); 86 Stat. 816 et seq., Pub. L. 92-500; 91 Stat. 1567, Pub. L. 95-217.

§ 412.17 [Removed and Reserved]

2. Section 412.17 is removed and reserved.

PART 418—FERTILIZER MANUFACTURING POINT SOURCE CATEGORY

1. The authority citation for Part 418 is revised to read as follows:

Authority: Secs. 301, 304 (b) and (c), 306 (b) and (c), 307(c) of the Federal Water Pollution Control Act, as amended; 33 U.S.C. 1251, 1311, 1314 (b) and (c), 1316 (b) and (c), and 1317(c); 86 Stat. 816 et seq., Pub. L. 92-500; 91 Stat. 1567, Pub. L. 95-217.

2. The heading of § 418.17 is revised to read as follows. (The entry for § 418.17 is also revised in the table of contents for Part 418.)

§ 418.17 Effluent limitations quidelines representing the degree of effluent reduction attainable by the application of the best conventional pollutant control technology.

* * * * *

3. In the table of contents for Part 418, the entry for § 418.27 is revised to read as follows:

Sec.

* * * * *

418.27 Effuent limitations quidelines representing the degree of effluent reduction attainable by the application of the best conventional pollutant control technology.

* * * * *

4. Section 418.23 is revised to read as follows:

§ 418.23 Effluent limitations quidelines representing the degree of effluent reduction attainable by the application of the best available technology economically achievable.

Except as provided in §§ 125.30 through 125.32, the following limitations establish the quantity or quality of pollutants or pollutant properties, which may be discharged by a point source

subject to the provisions of this subpart after application of the best available technology economically achievable.

Effluent characteristic	Effluent limitations	
	Maximum for any 1 day	Average of daily values for 30 consecutive days shall not exceed—
	Metric units (kilograms per 1,000 kg of product)	
Ammonia (as N)	0.05	0.025
	English units (pounds per 1,000 lb of product)	
Ammonia (as N)	0.05	0.025

PART—422 PHOSPHATE MANUFACTURING POINT SOURCE CATEGORY

1. The authority citation for Part 422 is revised to read as follows:

Authority: Secs. 301, 304 (b) and (c), 306 (b) and (c), and 307(c) of the Federal Water Pollution Control Act, as amended; 33 U.S.C. 1251, 1311, 1314 (b) and (c), 1316 (b) and (c), 1317(c); 86 Stat. 816 et seq., Pub. L. 92-500; 91 Stat. 1567, Pub. L. 95-217.

§ 422.66 [Revised]

2. Section 422.66 is reserved.

3. Section 422.67 is added to read as follows:

§ 422.67 Effluent limitations guidelines representing the degree of effluent reduction attainable by the application of the best conventional pollutant control technology.

Except as provided in §§ 125.30 through 125.32, the following limitations establish the quantity or quality of pollutants or pollutant properties, controlled by this section, which may be discharged by a point source subject to the provisions of this subpart after application of the best conventional pollutant control technology:

[Metric units (kg/kkg of product); English units (lb/1,000 lb of product)]

Effluent characteristic	Effluent limitations	
	Maximum for any 1 day	Average of daily values for 30 consecutive days shall not exceed—
TSS	0.35	0.18
pH	(1)	(1)

[1] Within the range 6.0 to 9.5.

PART 424—FERROALLOY MANUFACTURING POINT SOURCE CATEGORY

1. The authority citation for Part 424 is revised to read as follows:

Authority: Secs. 301, 304(b) and (c), 306(b) and (c), 307(c) of the Federal Water Pollution Control Act, as amended; 33 U.S.C. 1251, 1311, 1314(b) and (c), 1316 (b) and (c), 1317(c); 86 Stat. 816 et seq., Pub. L. 92-500; 91 Stat. 1567, Pub. L. 95-217.

§§ 424.17, 424.27, 424.37 [Added]

§§ 424.47, 424.67, 424.77 [Revised]

2. Sections 424.17, 424.27, and 424.37 are added, and §§ 424.47, 424.67, and 424.77 are revised. The text of each section is identical except for the section number in the heading and the section number referenced at the end of the section. The text of the sections is set out only once. Within the text are two blank spaces, one designated (a) and one designated (b). In the table preceding the text, column (a) indicates the section number to be added to the section heading for the respective subparts of Part 424. Column (b) indicates the section number to be added to the text of the section indicated in column (a).

Subpart	(a) Section number to be added to section heading	(b) Section number to be added to text of the section in (a)
Subpart A—Open electric furnaces with wet air pollution control devices subcategory	424.17	424.12
Subpart B—Covered electric furnances and other smelting operations with wet air pollution control devices subcategory	424.27	424.22
Subpart C—Slag processing subcategory	424.37	424.32
Subpart D—Covered calcium carbide furnaces with wet air pollution control devices subcategory	424.47	424.42
Subpart F—Electrolytic manganese products subcategory	424.67	424.62
Subpart G—Electrolytic chromium subcategory	424.77	424.72

§ (a) Effluent limitations guidelines representing the degree of effluent reduction attainable by the application of the best conventional pollutant control technology.

Except as provided in §§ 125.30 through 125.32, any existing point source subject to this subpart shall achieve the following effluent limitations representing the degree of effluent reduction attainable by the application of the best conventional pollutant control technology (BCT): The limitations shall be the same as those specified for conventional pollutants (which are defined in § 401.16) in § *(b)* of this subpart for the best practicable control technology currently available (BPT).

PART 426—GLASS MANUFACTURING POINT SOURCE CATEGORY

1. The authority citation for Part 426 is revised to read as follows:

Authority: Secs. 301, 304 (b) and (c), 306 (b) and (c), 307(c), and 316(b) of the Federal Water Pollution Control Act, as amended; 33 U.S.C. 1251, 1311, 1314, 1316 (b) and (c), 1317(b); 86 Stat. 816 et seq., Pub. L. 92-500; 91 Stat. 1567, Pub. L. 95-217.

§§ 426.17 and 426.47 [Added]

§§ 426.57, 426.67, 426.77, 426.87, 426.107, 426.117, 426.127, 426.137 [Revised]

2. Sections 426.17 and 426.47 are added, and §§ 426.57, 426.67, 426.77, 426.87, 426.107, 426.117, 426.127, and 426.137 are revised. The text of each section is identical except for the section number in the heading and the section number referenced at the end of the section. The text of the sections is set out only once. Within the text are two blank spaces, one designated (a) and one designated (b). In the table preceding the text, column (a) indicates the section number to be added to the section heading for the respective subparts of Part 426. Column (b) indicates the section number to be added to the text of the section indicated in column (a).

Subpart	(a) Section number to be added to section heading	(b) Section number to be added to text of the section in (a)
Subpart A—Insulation fiberglass subcategory	426.17	426.12
Subpart D—Plate glass manufacturing subcategory	426.47	426.42
Subpart E—Float glass manufacturing subcategory	426.57	426.52
Subpart F—Automotive glass tempering subcategory	426.67	426.62
Subpart G—Automotive glass laminating subcategory		
Support H—Glass container manufacturing subcategory	426.87	426.82
Subpart J—Glass tubing (Danner) manufacturing subcategory	426.107	426.102
Subpart K—Television picture tube envelope manufacturing subcategory	426.117	426.112
Subpart L—Incandescent lamp envelope manufacturing subcategory	426.127	426.122

§ (a) Effluent limitations guidelines representing the degree of effluent reduction attainable by the application of the best conventional pollutant control technology (BCT).

Except as provided in §§ 125.30 through 125.32, any existing point source

subject to this subpart shall achieve the following effluent limitations representing the degree of effluent reduction attainable by the application of the best conventional pollutant control technology (BCT): The limitations shall be the same as those specified for conventional pollutants (which are defined in § 401.16) in § (*b*) of this subpart for the best practicable control technology currently available (BPT).

3. Section 426.123 is revised to read as follows:

§ 426.123 Effluent limitations guidelines representing the degree of effluent reduction available by the application of the best available technology economically achievable.

Except as provided in §§ 125.30 through 125.32, the following limitations establish the quantity or quality of pollutants or pollutant properties, controlled by this section, which may be discharged by a point source subject to the provisions of this subpart after application of the best available technology economically achievable:

(a) [Reserved]

(b) Any manufacturing plant which frosts incandescent lamp envelopes shall meet the following limitations with regard to the finishing operations.

Effluent characteristic	Effluent limitations	
	Maximum for any 1 day	Average of daily values for 30 consecutive days shall not exceed—
	Metric units (g/kkg of product frosted)	
Fluoride	104.0	52.0
Ammonia	240.0	120.0
	English units (lb/1,000 lb of product frosted)	
Fluoride	0.104	0.052
Ammonia	0.24	0.12

§ 426.133 [Amended]

4. In § 426.133, paragraph (c) is removed and reserved.

§ 426.137 [Removed and Reserved]

5. Section 426.137 is removed and reserved.

PART 432—MEAT PRODUCTS POINT SOURCE CATEGORY

1. The authority citation for Part 432 is revised to read as follows:

Authority: Secs. 301, 304 (b) and (c), 306 (b) and (c), and 307(c) of the Federal Water Pollution Control Act, as amended; 33 U.S.C. 1251, 1311, 1314 (b) and (c), 1316 (b) and (c), 1317(c); 86 Stat. 816 et seq., Pub. L. 92-500; 91 Stat. 1567, Pub. L. 95-217.

§§ 432.17, 432.27, 432.37, 432.47, 432.67, 432.77, 432.87, 432.97 [Revised]

2. Sections 432.17, 432.27, 432.37, 432.47, 432.67, 432.77, 432.87, and 432.97 are revised. The text of each section is identical except for the section number in the heading and the section number referenced at the end of the section. The text of the sections is set out only once. Within the text are two blank spaces, one designated (a) and one designated (b). In the table preceding the text, column (a) indicates the section number to be added to the section heading for the respective subparts of Part 432. Column (b) indicates the section number to be added to the text of the section indicated in column (a).

Subpart	(a) Section number to be added to section heading	(b) Section number to be added to text of the section in (a)
Subpart A—Simple slaughterhouse subcategory	432.17	432.12
Subpart B—Complex slaughterhouse subcategory	432.27	432.22
Subpart C—Low-processing packinghouse subcategory	432.37	432.32
Subpart D—High-processing packinghouse subcategory	432.47	432.42
Subpart F—Meat cutter subcategory	432.67	432.62
Subpart G—Sausage and luncheon meats processor subcategory	432.77	432.72
Subpart H—Ham processor subcategory	432.87	432.82
Subpart I—Canned meat processor subcategory	432.97	432.92

§ (a) Effluent limitations guidelines representing the degree of effluent reduction attainable by the application of the best conventional pollutant control technology (BCT).

Except as provided in §§ 125.30 through 125.32, any existing point source subject to this subpart shall achieve the following effluent limitations representing the degree of effluent reduction attainable by the application of the best conventional pollutant control technology (BCT): The limitations shall be the same as those specified for conventional pollutants (which are defined in § 401.16) in § *b* of this subpart for the best practicable control technology currently available (BPT).

3. Section 432.57 is added to Subpart E to read as follows:

§ 432.57 Effluent limitations guidelines representing the degree of effluent reduction attainable by the application of the best conventional pollutant control technology.

Except as provided in §§ 125.30 through 125.32, the following limitations establish the quantity or quality of pollutants or pollutant properties, controlled by this section, which may be discharged by a point source subject to the provisions of this subpart after application of the best conventional pollutant control technology:

Effluent characteristic	Effluent limitations	
	Maximum for any 1 day	Average of daily values for 30 consecutive days shall not exceed—
	Metric units (kg/kkg of finished product)	
BOD5	1.0	0.5
TSS	1.2	0.6
Oil and grease	0.5	0.25
pH	(1)	(1)
Fecal coliforms	(2)	(2)
	English units (lb/1,000 lb of finished product)	
BOD5	1.0	0.5
TSS	1.2	0.6
Oil and grease	0.5	0.25
pH	(1)	(1)
Fecal coliforms	(2)	(2)

[1] Within the range 6.0 to 9.0.
[2] No limitation.

4. Section 432.107 is added to Subpart J to read as follows:

§ 432.107 Effluent limitations guidelines representing the degree of effluent reduction attainable by the application of the best conventional pollution control technology.

(a) Except as provided in §§ 125.30 through 125.32, and subject to the provisions of paragraph (b) of this section, the following limitations establish the quantity or quality of pollutants or pollutant properties, controlled by this section, which may be discharged by a point source subject to the provisions of this subpart after application of the best conventional pollutant control technology:

Effluent characteristic	Effluent limitations	
	Maximum for any 1 day	Average of daily values for 30 consecutive days shall not exceed—
	Metric units (kg/kkg of raw material)	
BOD5	0.18	0.09
TSS	0.22	0.11
Oil and grease	0.10	0.05
Fecal coliforms	(1)	(1)
pH	(2)	(2)
	English units (lb/1,000 lb. of raw material)	
BOD5	0.18	0.09
TSS	0.22	0.11
Oil and grease	0.10	0.05
Fecal coliforms	(1)	(1)
pH	(2)	(2)

[1] Maximum at any time: 400 mpn/100 ml.
[2] Within the range 6.0 to 9.0.

(b) The limitations given in paragraph (a) of this section for BOD5 and TSS are derived for a renderer which does no cattle hide curing as part of the plant activities. If a renderer does conduct hide curing, the following empirical formulas should be used to derive an additive adjustment to the effluent limitations for BOD5 and TSS.

BOD5 Adjustment (kg/kkg RM)=3.6×(number of hides)/kg of raw material

(lb/1,000 lb RM)=7.9×(number of hides)/lbs of raw material

TSS Adjustment (kg/kkg RM)=6.2×(number of hides)/kg of raw material

(lb/1,000 lb RM)=13.6×(number of hides)/lbs of raw material

[FR Doc. 86-11789 Filed 7-8-86; 8:45 am]

BILLING CODE 6560-50-M

federal register

Wednesday
July 9, 1986

Part IV

Environmental Protection Agency

Environmental Auditing Policy Statement; Notice

ENVIRONMENTAL PROTECTION AGENCY

[OPPE-FRL-3046-6]

Environmental Auditing Policy Statement

AGENCY: Environmental Protection Agency (EPA).

ACTION: Final policy statement.

SUMMARY: It is EPA policy to encourage the use of environmental auditing by regulated entities to help achieve and maintain compliance with environmental laws and regulations, as well as to help identify and correct unregulated environmental hazards. EPA first published this policy as interim guidance on November 8, 1985 (50 FR 46504). Based on comments received regarding the interim guidance, the Agency is issuing today's final policy statement with only minor changes.

This final policy statement specifically:

- Encourages regulated entities to develop, implement and upgrade environmental auditing programs;
- Discusses when the Agency may or may not request audit reports;
- Explains how EPA's inspection and enforcement activities may respond to regulated entities' efforts to assure compliance through auditing;
- Endorses environmental auditing at federal facilities;
- Encourages state and local environmental auditing initiatives; and
- Outlines elements of effective audit programs.

Environmental auditing includes a variety of compliance assessment techniques which go beyond those legally required and are used to identify actual and potential environmental problems. Effective environmental auditing can lead to higher levels of overall compliance and reduced risk to human health and the environment. EPA endorses the practice of environmental auditing and supports its accelerated use by regulated entities to help meet the goals of federal, state and local environmental requirements. However, the existence of an auditing program does not create any defense to, or otherwise limit, the responsibility of any regulated entity to comply with applicable regulatory requirements.

States are encouraged to adopt these or similar and equally effective policies in order to advance the use of environmental auditing on a consistent, nationwide basis.

DATES: This final policy statement is effective July 9, 1986.

FOR FURTHER INFORMATION CONTACT:

Leonard Fleckenstein, Office of Policy, Planning and Evaluation, (202) 382-2726;

or

Cheryl Wasserman, Office of Enforcement and Compliance Monitoring, (202) 382-7550.

SUPPLEMENTARY INFORMATION:

ENVIRONMENTAL AUDITING POLICY STATEMENT

I. Preamble

On November 8, 1985 EPA published an Environmental Auditing Policy Statement, effective as interim guidance, and solicited written comments until January 7, 1986.

Thirteen commenters submitted written comments. Eight were from private industry. Two commenters represented industry trade associations. One federal agency, one consulting firm and one law firm also submitted comments.

Twelve commenters addressed EPA requests for audit reports. Three comments per subject were received regarding inspections, enforcement response and elements of effective environmental auditing. One commenter addressed audit provisions as remedies in enforcement actions, one addressed environmental auditing at federal facilities, and one addressed the relationship of the policy statement to state or local regulatory agencies. Comments generally supported both the concept of a policy statement and the interim guidance, but raised specific concerns with respect to particular language and policy issues in sections of the guidance.

General Comments

Three commenters found the interim guidance to be constructive, balanced and effective at encouraging more and better environmental auditing.

Another commenter, while considering the policy on the whole to be constructive, felt that new and identifiable auditing "incentives" should be offered by EPA. Based on earlier comments received from industry, EPA believes most companies would not support or participate in an "incentives-based" environmental auditing program with EPA. Moreover, general promises to forgo inspections or reduce enforcement responses in exchange for companies' adoption of environmental auditing programs—the "incentives" most frequently mentioned in this context—are fraught with legal and policy obstacles.

Several commenters expressed concern that states or localities might use the interim guidance to *require* auditing. The Agency disagrees that the policy statement opens the way for states and localities to require auditing. No EPA policy can grant states or localities any more (or less) authority than they already possess. EPA believes that the interim guidance effectively encourages *voluntary* auditing. In fact, Section II.B. of the policy states: "because audit quality depends to a large degree on genuine management commitment to the program and its objectives, auditing should remain a voluntary program."

Another commenter suggested that EPA should not expect an audit to identify all potential problem areas or conclude that a problem identified in an audit reflects normal operations and procedures. EPA agrees that an audit report should clearly reflect these realities and should be written to point out the audit's limitations. However, since EPA will not routinely request audit reports, the Agency does not believe these concerns raise issues which need to be addressed in the policy statement.

A second concern expressed by the same commenter was that EPA should acknowledge that environmental audits are only part of a successful environmental management program and thus should not be expected to cover every environmental issue or solve all problems. EPA agrees and accordingly has amended the statement of purpose which appears at the end of this preamble.

Yet another commenter thought EPA should focus on environmental performance results (compliance or non-compliance), not on the processes or vehicles used to achieve those results. In general, EPA agrees with this statement and will continue to focus on environmental results. However, EPA also believes that such results can be improved through Agency efforts to identify and encourage effective environmental management practices, and will continue to encourage such practices in non-regulatory ways.

A final general comment recommended that EPA should sponsor seminars for small businesses on how to start auditing programs. EPA agrees that such seminars would be useful. However, since audit seminars already are available from several private sector organizations, EPA does not believe it should intervene in that market, with the possible exception of seminars for government agencies, especially federal agencies, for which EPA has a broad mandate under Executive Order 12088 to

provide technical assistance for environmental compliance.

Requests for Reports

EPA received 12 comments regarding Agency requests for environmental audit reports, far more than on any other topic in the policy statement. One commenter felt that EPA struck an appropriate balance between respecting the need for self-evaluation with some measure of privacy, and allowing the Agency enough flexibility of inquiry to accomplish future statutory missions. However, most commenters expressed concern that the interim guidance did not go far enough to assuage corporate fears that EPA will use audit reports for environmental compliance "witch hunts." Several commenters suggested additional specific assurances regarding the circumstances under which EPA will request such reports.

One commenter recommended that EPA request audit reports only "when the Agency can show the information it needs to perform its statutory mission cannot be obtained from the monitoring, compliance or other data that is otherwise reportable and/or accessible to EPA, or where the Government deems an audit report material to a criminal investigation." EPA accepts this recommendation in part. The Agency believes it would not be in the best interest of human health and the environment to commit to making a "showing" of a compelling information need before ever requesting an audit report. While EPA may normally be willing to do so, the Agency cannot rule out in advance all circumstances in which such a showing may not be possible. However, it would be helpful to further clarify that a request for an audit report or a portion of a report normally will be made when needed information is not available by alternative means. Therefore, EPA has revised Section III.A., paragraph two and added the phrase: "and usually made where the information needed cannot be obtained from monitoring, reporting or other data otherwise available to the Agency."

Another commenter suggested that (except in the case of criminal investigations) EPA should limit requests for audit documents to specific questions. By including the phrase "or relevant portions of a report" in Section III.A., EPA meant to emphasize it would not request an entire audit document when only a relevant portion would suffice. Likewise, EPA fully intends not to request even a portion of a report if needed information or data can be otherwise obtained. To further clarify this point EPA has added the phrase, "most likely focused on particular information needs rather than the entire report," to the second sentence of paragraph two, Section III.A. Incorporating the two comments above, the first two sentences in paragraph two of final Section III.A. now read: "EPA's authority to request an audit report, or relevant portions thereof, will be exercised on a case-by-case basis where the Agency determines it is needed to accomplish a statutory mission or the Government deems it to be material to a criminal investigation. EPA expects such requests to be limited, most likely focused on particular information needs rather than the entire report, and usually made where the information needed cannot be obtained from monitoring, reporting or other data otherwise available to the Agency."

Other commenters recommended that EPA not request audit reports under any circumstances, that requests be "restricted to only those legally required," that requests be limited to criminal investigations, or that requests be made only when EPA has reason to believe "that the audit programs or reports are being used to conceal evidence of environmental non-compliance or otherwise being used in bad faith." EPA appreciates concerns underlying all of these comments and has considered each carefully. However, the Agency believes that these recommendations do not strike the appropriate balance between retaining the flexibility to accomplish EPA's statutory missions in future, unforeseen circumstances, and acknowledging regulated entities' need to self-evaluate environmental performance with some measure of privacy. Indeed, based on prime informal comments, the small number of formal comments received, and the even smaller number of adverse comments, EPA believes the final policy statement should remain largely unchanged from the interim version.

Elements of Effective Environmental Auditing

Three commenters expressed concerns regarding the seven general elements EPA outlined in the Appendix to the interim guidance.

One commenter noted that were EPA to further expand or more fully detail such elements, programs not specifically fulfilling each element would then be judged inadequate. EPA agrees that presenting highly specific and prescriptive auditing elements could be counter-productive by not taking into account numerous factors which vary extensively from one organization to another, but which may still result in effective auditing programs. Accordingly, EPA does not plan to expand or more fully detail these auditing elements.

Another commenter asserted that states and localities should be cautioned not to consider EPA's auditing elements as mandatory steps. The Agency is fully aware of this concern and in the interim guidance noted its strong opinion that "regulatory agencies should not attempt to prescribe the precise form and structure of regulated entities' environmental management or auditing programs." While EPA cannot require state or local regulators to adopt this or similar policies, the Agency does strongly encourage them to do so, both in the interim and final policies.

A final commenter thought the Appendix too specifically prescribed what should and what should not be included in an auditing program. Other commenters, on the other hand, viewed the elements described as very general in nature. EPA agrees with these other commenters. The elements are in no way binding. Moreover, EPA believes that most mature, effective environmental auditing programs do incorporate each of these general elements in some form, and considers them useful yardsticks for those considering adopting or upgrading audit programs. For these reasons EPA has not revised the Appendix in today's final policy statement.

Other Comments

Other significant comments addressed EPA inspection priorities for, and enforcement responses to, organizations with environmental auditing programs.

One commenter, stressing that audit programs are *internal* management tools, took exception to the phrase in the second paragraph of section III.B.1. of the interim guidance which states that environmental audits can 'complement' regulatory oversight. By using the word 'complement' in this context, EPA does not intend to imply that audit reports must be obtained by the Agency in order to supplement regulatory inspections. 'Complement' is used in a broad sense of being in addition to inspections and providing something (i.e., self-assessment) which otherwise would be lacking. To clarify this point EPA has added the phrase "by providing self-assessment to assure compliance" after "environmental audits may complement inspections" in this paragraph.

The same commenter also expressed concern that, as EPA sets inspection priorities, a company having an audit program could appear to be a 'poor performer' due to complete and accurate reporting when measured against a

company which reports something less than required by law. EPA agrees that it is important to communicate this fact to Agency and state personnel, and will do so. However, the Agency does not believe a change in the policy statement is necessary.

A further comment suggested EPA should commit to take auditing programs into account when assessing all enforcement actions. However, in order to maintain enforcement flexibility under varied circumstances, the Agency cannot promise reduced enforcement responses to violations at all audited facilities when other factors may be overriding. Therefore the policy statement continues to state that EPA may exercise its decretion to consider auditing programs as evidence of honest and genuine efforts to assure compliance, which would then be taken into account in fashioning enforcement responses to violations.

A final commenter suggested the phrase "expeditiously correct environmental problems" not be used in the enforcement context since it implied EPA would use an entity's record of correcting nonregulated matters when evaluating regulatory violations. EPA did not intend for such an inference to be made. EPA intended the term "environmental problems" to refer to the underlying circumstances which eventually lead up to the violations. To clarify this point, EPA is revising the first two sentences of the paragraph to which this comment refers by changing "environmental problems" to "violations and underlying environmental problems" in the first sentence and to "underlying environmental problems" in the second sentence.

In a separate development EPA is preparing an update of its January 1984 *Federal Facilities Compliance Strategy*, which is referenced in section III. C. of the auditing policy. The Strategy should be completed and available on request from EPA's Office of Federal Activities later this year.

EPA thanks all commenters for responding to the November 8, 1985 publication. Today's notice is being issued to inform regulated entities and the public of EPA's final policy toward environmental auditing. This policy was developed to help (a) encourage regulated entities to institutionalize effective audit practices as one means of improving compliance and sound environmental management, and (b) guide internal EPA actions directly related to regulated entities' environmental auditing programs.

EPA will evaluate implementation of this final policy to ensure it meets the above goals and continues to encourage better environmental management, while strengthening the Agency's own efforts to monitor and enforce compliance with environmental requirements.

II. General EPA Policy on Environmental Auditing

A. Introduction

Environmental auditing is a systematic, documented, periodic and objective review by regulated entities [1] of facility operations and practices related to meeting environmental requirements. Audits can be designed to accomplish any or all of the following: verify compliance with environmental requirements; evaluate the effectiveness of environmental management systems already in place; or assess risks from regulated and unregulated materials and practices.

Auditing serves as a quality assurance check to help improve the effectiveness of basic environmental management by verifying that management practices are in place, functioning and adequate. Environmental audits evaluate, and are not a substitute for, direct compliance activities such as obtaining permits, installing controls, monitoring compliance, reporting violations, and keeping records. Environmental auditing may verify but does not include activities required by law, regulation or permit (e.g., continuous emissions monitoring, composite correction plans at wastewater treatment plants, etc.). Audits do not in any way replace regulatory agency inspections. However, environmental audits can improve compliance by complementing conventional federal, state and local oversight.

The appendix to this policy statement outlines some basic elements of environmental auditing (e.g., auditor independence and top management support) for use by those considering implementation of effective auditing programs to help achieve and maintain compliance. Additional information on environmental auditing practices can be found in various published materials.[2]

Environmental auditing has developed for sound business reasons, particularly as a means of helping regulated entities manage pollution control affirmatively over time instead of reacting to crises. Auditing can result in improved facility environmental performance, help communicate effective solutions to common environmental problems, focus facility managers' attention on current and upcoming regulatory requirements, and generate protocols and checklists which help facilities better manage themselves. Auditing also can result in better-integrated management of environmental hazards, since auditors frequently identify environmental liabilities which go beyond regulatory compliance. Companies, public entities and federal facilities have employed a variety of environmental auditing practices in recent years. Several hundred major firms in diverse industries now have environmental auditing programs, although they often are known by other names such as assessment, survey, surveillance, review or appraisal.

While auditing has demonstrated its usefulness to those with audit programs, many others still do not audit. Clarification of EPA's position regarding auditing may help encourage regulated entities to establish audit programs or upgrade systems already in place.

B. EPA Encourages the Use of Environmental Auditing

EPA encourages regulated entities to adopt sound environmental management practices to improve environmental performance. In particular, EPA encourages regulated entities subject to environmental regulations to institute environmental auditing programs to help ensure the adequacy of internal systems to achieve, maintain and monitor compliance. Implementation of environmental auditing programs can result in better identification, resolution and avoidance of environmental problems, as well as improvements to management practices. Audits can be conducted effectively by independent internal or third party auditors. Larger organizations generally have greater resources to devote to an internal audit team, while smaller entities might be more likely to use outside auditors.

Regulated entities are responsible for taking all necessary steps to ensure compliance with environmental requirements, whether or not they adopt audit programs. Although environmental laws do not require a regulated facility to have an auditing program, ultimate responsibility for the environmental

[1] "Regulated entities" include private firms and public agencies with facilities subject to environmental regulation. Public agencies can include federal, state or local agencies as well as special-purpose organizations such as regional sewage commissions.

[2] See, e.g., "Current Practices in Environmental Auditing," EPA Report No. EPA-230-09-83-006, February 1984; "Annotated Bibliography on Environmental Auditing," Fifth Edition, September 1985, both available from: Regulatory Reform Staff, PM-223, EPA, 401 M Street SW, Washington, DC 20460.

performance of the facility lies with top management, which therefore has a strong incentive to use reasonable means, such as environmental auditing, to secure reliable information of facility compliance status.

EPA does not intend to dictate or interfere with the environmental management practices of private or public organizations. Nor does EPA intend to mandate auditing (though in certain instances EPA may seek to include provisions for environmental auditing as part of settlement agreements, as noted below). Because environmental auditing systems have been widely adopted on a voluntary basis in the past, and because audit quality depends to a large degree upon genuine management commitment to the program and its objectives, auditing should remain a voluntary activity.

III. EPA Policy on Specific Environmental Auditing Issues

A. Agency Requests for Audit Reports

EPA has broad statutory authority to request relevant information on the environmental compliance status of regulated entities. However, EPA believes routine Agency requests for audit reports [3] could inhibit auditing in the long run, decreasing both the quantity and quality of audits conducted. Therefore, as a matter of policy, EPA will *not* routinely request environmental audit reports.

EPA's authority to request an audit report, or relevant portions thereof, will be exercised on a case-by-case basis where the Agency determines it is needed to accomplish a statutory mission, or where the Government deems it to be material to a criminal investigation. EPA expects such requests to be limited, most likely focused on particular information needs rather than the entire report, and usually made where the information needed cannot be obtained from monitoring, reporting or other data otherwise available to the Agency. Examples would likely include situations where: audits are conducted under consent decrees or other settlement agreements; a company has placed its management practices at issue by raising them as a defense; or state of mind or intent are a relevant element of inquiry, such as during a criminal investigation. This list is illustrative rather than exhaustive, since there doubtless will be other situations, not subject to prediction, in which audit reports rather than information may be required.

EPA acknowledges regulated entities' need to self-evaluate environmental performance with some measure of privacy and encourages such activity. However, audit reports may not shield monitoring, compliance, or other information that would otherwise be reportable and/or accessible to EPA, even if there is no explicit 'requirement' to generate that data.[4] Thus, this policy does not alter regulated entities' existing or future obligations to monitor, record or report information required under environmental statutes, regulations or permits, or to allow EPA access to that information. Nor does this policy alter EPA's authority to request and receive any relevant information—including that contained in audit reports—under various environmental statutes (e.g., Clean Water Act section 308, Clean Air Act sections 114 and 208) or in other administrative or judicial proceedings.

Regulated entities also should be aware that certain audit findings may by law have to be reported to government agencies. However, in addition to any such requirements, EPA encourages regulated entities to notify appropriate State or Federal officials of findings which suggest significant environmental or public health risks, even when not specifically required to do so.

B. EPA Response to Environmental Auditing

1. General Policy

EPA will not promise to forgo inspections, reduce enforcement responses, or offer other such incentives in exchange for implementation of environmental auditing or other sound environmental management practices. Indeed, a credible enforcement program provides a strong incentive for regulated entities to audit.

Regulatory agencies have an obligation to assess source compliance status independently and cannot eliminate inspections for particular firms or classes of firms. Although environmental audits may complement inspections by providing self-assessment to assure compliance, they are in no way a substitute for regulatory oversight. Moreover, certain statutes (e.g. RCRA) and Agency policies establish minimum facility inspection frequencies to which EPA will adhere.

However, EPA will continue to address environmental problems on a priority basis and will consequently inspect facilities with poor environmental records and practices more frequently. Since effective environmental auditing helps management identify and promptly correct actual or potential problems, audited facilities' environmental performance should improve. Thus, while EPA inspections of self-audited facilities will continue, to the extent that compliance performance is considered in setting inspection priorities, facilities with a good compliance history may be subject to fewer inspections.

In fashioning enforcement responses to violations, EPA policy is to take into account, on a case-by-case basis, the honest and genuine efforts of regulated entities to avoid and promptly correct violations and underlying environmental problems. When regulated entities take reasonable precautions to avoid noncompliance, expeditiously correct underlying environmental problems discovered through audits or other means, and implement measures to prevent their recurrence, EPA may exercise its discretion to consider such actions as honest and genuine efforts to assure compliance. Such consideration applies particularly when a regulated entity promptly reports violations or compliance data which otherwise were not required to be recorded or reported to EPA.

2. Audit Provisions as Remedies in Enforcement Actions

EPA may propose environmental auditing provisions in consent decrees and in other settlement negotiations where auditing could provide a remedy for identified problems and reduce the likelihood of similar problems recurring in the future.[5] Environmental auditing provisions are most likely to be proposed in settlement negotiations where:

- A pattern of violations can be attributed, at least in part, to the absence or poor functioning of an environmental management system; or
- The type or nature of violations indicates a likelihood that similar noncompliance problems may exist or occur elsewhere in the facility or at other facilities operated by the regulated entity.

[3] An "environmental audit report" is a written report which candidly and thoroughly presents findings from a review, conducted as part of an environmental audit as described in section II.A., of facility environmental performance and practices. An audit report is not a substitute for compliance monitoring reports or other reports or records which may be required by EPA or other regulatory agencies.

[4] See, for example, "Duties to Report or Disclose Information on the Environmental Aspects of Business Activities," Environmental Law Institute report to EPA, final report, September 1985.

[5] EPA is developing guidance for use by Agency negotiators in structuring appropriate environmental audit provisions for consent decrees and other settlement negotiations.

Through this consent decree approach and other means, EPA may consider how to encourage effective auditing by publicly owned sewage treatment works (POTWs). POTWs often have compliance problems related to operation and maintenance procedures which can be addressed effectively through the use of environmental auditing. Under its National Municipal Policy EPA already is requiring many POTWs to develop composite correction plans to identify and correct compliance problems.

C. Environmental Auditing at Federal Facilities

EPA encourages all federal agencies subject to environmental laws and regulations to institute environmental auditing systems to help ensure the adequacy of internal systems to achieve, maintain and monitor compliance. Environmental auditing at federal facilities can be an effective supplement to EPA and state inspections. Such federal facility environmental audit programs should be structured to promptly identify environmental problems and expenditiously develop schedules for remedial action.

To the extent feasible, EPA will provide technical assistance to help federal agencies design and initiate audit programs. Where appropriate, EPA will enter into agreements with other agencies to clarify the respective roles, responsibilities and commitments of each agency in conducting and responding to federal facility environmental audits.

With respect to inspections of self-audited facilities (see section III.B.1 above) and requests for audit reports (see section III.A above), EPA generally will respond to environmental audits by federal facilities in the same manner as it does for other regulated entities, in keeping with the spirit and intent of Executive Order 12088 and the EPA *Federal Facilities Compliance Strategy* (January 1984, update forthcoming in late 1986). Federal agencies should, however, be aware that the Freedom of Information Act will govern any disclosure of audit reports or audit-generated information requested from federal agencies by the public.

When federal agencies discover significant violations through an environmental audit, EPA encourages them to submit the related audit findings and remedial action plans expeditiously to the applicable EPA regional office (and responsible state agencies, where appropriate) even when not specifically required to do so. EPA will review the audit findings and action plans and either provide written approval or negotiate a Federal Facilities Compliance Agreement. EPA will utilize the escalation procedures provided in Executive Order 12088 and the EPA *Federal Facilities Compliance Strategy* only when agreement between agencies cannot be reached. In any event, federal agencies are expected to report pollution abatement projects involving costs (necessary to correct problems discovered through the audit) to EPA in accordance with OMB Circular A-106. Upon request, and in appropriate circumstances, EPA will assist affected federal agencies through coordination of any public release of audit findings with approved action plans once agreement has been reached.

IV. Relationship to State or Local Regulatory Agencies

State and local regulatory agencies have independent jurisdiction over regulated entities. EPA encourages them to adopt these or similar policies, in order to advance the use of effective environmental auditing in a consistent manner.

EPA recognizes that some states have already undertaken environmental auditing initiatives which differ somewhat from this policy. Other states also may want to develop auditing policies which accommodate their particular needs or circumstances. Nothing in this policy statement is intended to preempt or preclude states from developing other approaches to environmental auditing. EPA encourages state and local authorities to consider the basic principles which guided the Agency in developing this policy:

- Regulated entities must continue to report or record compliance information required under existing statutes or regulations, regardless of whether such information is generated by an environmental audit or contained in an audit report. Required information cannot be withheld merely because it is generated by an audit rather than by some other means.
- Regulatory agencies cannot make promises to forgo or limit enforcement action against a particular facility or class of facilities in exchange for the use of environmental auditing systems. However, such agencies may use their discretion to adjust enforcement actions on a case-by-case basis in response to honest and genuine efforts by regulated entities to assure environmental compliance.
- When setting inspection priorities regulatory agencies should focus to the extent possible on compliance performance and environmental results.
- Regulatory agencies must continue to meet minimum program requirements (e.g., minimum inspection requirements, etc.).
- Regulatory agencies should not attempt to prescribe the precise form and structure of regulated entities' environmental management or auditing programs.

An effective state/federal partnership is needed to accomplish the mutual goal of achieving and maintaining high levels of compliance with environmental laws and regulations. The greater the consistency between state or local policies and this federal response to environmental auditing, the greater the degree to which sound auditing practices might be adopted and compliance levels improve.

Dated: June 28, 1986.

Lee M. Thomas,

Administrator.

Appendix—Elements of Effective Environmental Auditing Programs

Introduction: Environmental auditing is a systematic, documented, periodic and objective review by a regulated entity of facility operations and practices related to meeting environmental requirements.

Private sector environmental audits of facilities have been conducted for several years and have taken a variety of forms, in part to accommodate unique organizational structures and circumstances. Nevertheless, effective environmental audits appear to have certain discernible elements in common with other kinds of audits. Standards for internal audits have been documented extensively. The elements outlined below draw heavily on two of these documents: "Compendium of Audit Standards" (©1983, Walter Willborn, American Society for Quality Control) and "Standards for the Professional Practice of Internal Auditing" (©1981, The Institute of Internal Auditors, Inc.). They also reflect Agency analyses conducted over the last several years.

Performance-oriented auditing elements are outlined here to help accomplish several objectives. A general description of features of effective, mature audit programs can help those starting audit programs, especially federal agencies and smaller businesses. These elements also indicate the attributes of auditing EPA generally considers important to ensure program effectiveness. Regulatory agencies may use these elements in negotiating environmental auditing provisions for consent decrees. Finally, these elements can help guide states and localities considering auditing initiatives.

An effective environmental auditing system will likely include the following general elements:

I. *Explicit top management support for environmental auditing and commitment to follow-up on audit findings.* Management support may be demonstrated by a written policy articulating upper management support for the auditing program, and for compliance with all pertinent requirements, including corporate policies and permit requirements as well as federal, state and local statutes and regulations.

Management support for the auditing program also should be demonstrated by an explicit written commitment to follow-up on audit findings to correct identified problems and prevent their recurrence.

II. *An environmental auditing function independent of audited activities.* The status or organizational locus of environmental auditors should be sufficient to ensure objective and unobstructed inquiry, observation and testing. Auditor objectivity should not be impaired by personal relationships, financial or other conflicts of interest, interference with free inquiry or judgment, or fear of potential retribution.

III. *Adequate team staffing and auditor training.* Environmental auditors should possess or have ready access to the knowledge, skills, and disciplines needed to accomplish audit objectives. Each individual auditor should comply with the company's professional standards of conduct. Auditors, whether full-time or part-time, should maintain their technical and analytical competence through continuing education and training.

IV. *Explicit audit program objectives, scope, resources and frequency.* At a minimum, audit objectives should include assessing compliance with applicable environmental laws and evaluating the adequacy of internal compliance policies, procedures and personnel training programs to ensure continued compliance.

Audits should be based on a process which provides auditors: all corporate policies, permits, and federal, state, and local regulations pertinent to the facility; and checklists or protocols addressing specific features that should be evaluated by auditors.

Explicit written audit procedures generally should be used for planning audits, establishing audit scope, examining and evaluating audit findings, communicating audit results, and following-up.

V. *A process which collects, analyzes, interprets and documents information sufficient to achieve audit objectives.* Information should be collected before and during an onsite visit regarding environmental compliance(*1*), environmental management effectiveness(*2*), and other matters (*3*) related to audit objectives and scope. This information should be sufficient, reliable, relevant and useful to provide a sound basis for audit findings and recommendations.

a. *Sufficient* information is factual, adequate and convincing so that a prudent, informed person would be likely to reach the same conclusions as the auditor.

b. *Reliable* information is the best attainable through use of appropriate audit techniques.

c. *Relevant* information supports audit findings and recommendations and is consistent with the objectives for the audit.

d. *Useful* information helps the organization meet its goals.

The audit process should include a periodic review of the reliability and integrity of this information and the means used to identify, measure, classify and report it. Audit procedures, including the testing and sampling techniques employed, should be selected in advance, to the extent practical, and expanded or altered if circumstances warrant. The process of collecting, analyzing, interpreting, and documenting information should provide reasonable assurance that audit objectivity is maintained and audit goals are met.

VI. *A process which includes specific procedures to promptly prepare candid, clear and appropriate written reports on audit findings, corrective actions, and schedules for implementation.* Procedures should be in place to ensure that such information is communicated to managers, including facility and corporate management, who can evaluate the information and ensure correction of identified problems. Procedures also should be in place for determining what internal findings are reportable to state or federal agencies.

VII. *A process which includes quality assurance procedures to assure the accuracy and thoroughness of environmental audits.* Quality assurance may be accomplished through supervision, independent internal reviews, external reviews, or a combination of these approaches.

Footnotes to Appendix

(*1*) A comprehensive assessment of compliance with federal environmental regulations requires an analysis of facility performance against numerous environmental statutes and implementing regulations. These statutes include:

Resource Conservation and Recovery Act
Federal Water Pollution Control Act
Clean Air Act
Hazardous Materials Transportation Act
Toxic Substances Control Act
Comprehensive Environmental Response, Compensation and Liability Act
Safe Drinking Water Act
Federal Insecticide, Fungicide and Rodenticide Act
Marine Protection, Research and Sanctuaries Act
Uranium Mill Tailings Radiation Control Act

In addition, state and local government are likely to have their own environmental laws. Many states have been delegated authority to administer federal programs. Many local governments' building, fire, safety and health codes also have environmental requirements relevant to an audit evaluation.

(*2*) An environmental audit could go well beyond the type of compliance assessment normally conducted during regulatory inspections, for example, by evaluating policies and practices, regardless of whether they are part of the environmental system or the operating and maintenance procedures. Specifically, audits can evaluate the extent to which systems or procedures:

1. Develop organizational environmental policies which: a. implement regulatory requirements; b. provide management guidance for environmental hazards not specifically addressed in regulations;

2. Train and motivate facility personnel to work in an environmentally-acceptable manner and to understand and comply with government regulations and the entity's environmental policy;

3. Communicate relevant environmental developments expeditiously to facility and other personnel;

4. Communicate effectively with government and the public regarding serious environmental incidents;

5. Require third parties working for, with or on behalf of the organization to follow its environmental procedures;

6. Make proficient personnel available at all times to carry out environmental (especially emergency) procedures;

7. Incorporate environmental protection into written operating procedures;

8. Apply best management practices and operating procedures, including "good housekeeping" techniques;

9. Institute preventive and corrective maintenance systems to minimize actual and potential environmental harm;

10. Utilize best available process and control technologies;

11. Use most-effective sampling and monitoring techniques, test methods, recordkeeping systems or reporting protocols (beyond minimum legal requirements);

12. Evaluate causes behind any serious environmental incidents and establish procedures to avoid recurrence;

13. Exploit source reduction, recycle and reuse potential wherever practical; and

14. Substitute materials or processes to allow use of the least-hazardous substances feasible.

(3) Auditors could also assess environmental risks and uncertainties.

[FR Doc. 86-15423 Filed 7-8-86 8:45 am]

BILLING CODE 6560-50-M

federal register

Wednesday
July 9, 1986

Part V

Department of Health and Human Services

Food and Drug Administration

21 CFR Part 101

Food Labeling; Declaration of Sulfiting Agents; Final Rule

21 CFR Part 182

Sulfiting Agents; Revocation of GRAS Status for Use on Fruits and Vegetables Intended To Be Served or Sold Raw to Consumers; Final Rule

DEPARTMENT OF HEALTH AND HUMAN SERVICES

Food and Drug Administration

21 CFR Part 101

[Docket No. 84N-0103]

Food Labeling; Declaration of Sulfiting Agents

AGENCY: Food and Drug Administration.

ACTION: Final rule.

SUMMARY: The Food and Drug Administration (FDA) is adopting a regulation that clarifies the circumstances in which the presence of sulfiting agents (also referred to as "sulfites") must be declared on the label of foods. This regulation makes clear that when a sulfite is present in a detectable amount in a finished food, regardless of whether it has been directly added or indirectly added via one or more of the ingredients of the food, it is present in that food at a significant level and must be declared on the label. The regulation defines a detectable amount of sulfite to be 10 parts per million.

DATES: Effective January 9, 1987. The Director of the Office of the Federal Register approves the incorporation by reference of certain publications in 21 CFR 101.100 effective on January 9, 1987.

FOR FURTHER INFORMATION CONTACT: Elizabeth J. Campbell, Center for Food Safety and Applied Nutrition (HFF-312), Food and Drug Administration, 200 C Street SW., Washington, DC 20204, 202-485-0175.

SUPPLEMENTARY INFORMATION: .

Background

Under section 403(i)(2) of the Federal Food, Drug, and Cosmetic Act (the act) (21 U.S.C. 343(i)(2)), all of the ingredients of a finished food must be declared on the label of that food. However, that section also provides that exemptions from this requirement may be established when compliance with it is impracticable. Therefore, in 21 CFR 101.100(a)(3), FDA has created an exemption from that requirement for incidental additives. Under § 101.100(a)(3), an "incidental additive" is defined as an ingredient that has no technical or functional effect in the finished food and that is present in that food at a level that is insignificant.

FDA determines whether a substance exerts a technical or functional effect in a food on a case-by-case basis, because the factors influencing that determination will vary from food to food. FDA advises that food manufacturers who claim that a substance is an incidental additive have the burden of showing that the substance has no technical or functional effect in the food. If the ingredient is added directly to the food for a technical or functional effect, it must be declared on the label irrespective of the amount present in the finished food.

The present action, however, relates to the second part of the definition of "incidental additives." Its purpose is to define the level of sulfiting agents that is significant.

The sulfiting agents are sulfur dioxide, sodium sulfite, and sodium or potassium bisulfite or metabisulfite. In the **Federal Register** of April 3, 1985 (50 FR 13306), FDA proposed to establish 10 parts per million (ppm) as the level of sulfiting agent that the agency considers to be significant for purposes of labeling.

FDA received 53 comments in response to that proposal from consumers, food manufacturers and processors, trade associations, health-oriented associations, members of Congress, a research institute, a consumer interest organization, a State agency, and a county agency. Most of the comments supported the concept of requiring declaration of sulfites. A number of the comments were from consumers who said they were sensitive to sulfites and wanted FDA to take even stronger measures. A number of the comments from industry, however, requested revisions of the proposed provision that would limit the circumstances in which sulfite declarations would be required. The issues raised in the comments and the agency's responses follow.

Terminology

Before addressing the specific comments, it may be helpful to the reader to explain some of the terminology used in this document.

A broad chemical definition of "sulfite" is a salt or ester of sulfurous acid. This term has become widely used in a nontechnical sense to refer to some or all of the sulfiting agents. However, it is also used generically to refer to the collection of chemical species that are formed when sulfiting agents are added to foods.

When a sulfiting agent is added to a food, some of this ingredient binds to the molecules of the food and some of it does not. The portion of the sulfiting agent that does not bind to the food is called "free sulfite." "Free sulfite" is a mixture of sulfur dioxide, bisulfite ion, and sulfite ion in dynamic chemical equilibrium. The percentage of each of the three chemical species in the mixture is dependent upon the acidity of the food.

"Bound sulfite" refers to the variety of chemical species formed when the sulfiting agent does bind with chemicals in the food. Bound sulfite includes reversibly bound and irreversibly bound sulfite. Under certain conditions, some of the bound sulfite molecules will dissociate, or break apart, and form free sulfite. The portion of bound sulfite that dissociates is called "reversibly bound sulfite." The bound sulfite that does not dissociate to form free sulfite is called "irreversibly bound sulfite." The distinction between reversibly and irreversibly bound sulfites is dependent on conditions in the food because some bound sulfite will dissociate under one set of conditions and not under others.

This discussion of terminology is necessary for a full understanding of several of the issues considered in this document.

Comments

Adequate Protection for Sensitive Individuals

1. The comments from consumers supported the proposed labeling requirements. Most of the consumers who commented claimed to be sensitive to sulfites and wanted FDA to take strong measures to protect them from exposure to sulfites. Several specifically requested that FDA prohibit the use of sulfites in salad bar foods and other restaurant foods. Other comments stated that label declaration of sulfite alone would not provide adequate protection for sulfite-sensitive individuals. They, too, suggested stronger regulatory policies, including limiting certain uses of sulfites.

The agency agrees that labeling alone will not always provide adequate protection for sulfite-sensitive individuals. Based on its review of the most recent information available on the use of sulfites on fruits and vegetables intended to be served raw or sold raw to consumers or to be presented to consumers as fresh, FDA proposed to delete this use from the list of uses of sulfiting agents that are generally recognized as safe (GRAS) (August 14, 1985; 50 FR 32830). The only vegetables not covered by that proposal are potatoes. The adverse reactions suffered by sulfite-sensitive individuals after eating raw fruits and vegetables treated with sulfite are discussed in detail in the preamble to that proposal. Elsewhere in this issue of the **Federal Register**, FDA is issuing a final rule based on the August 14, 1985, proposal. The use of sulfites on fruits or vegetables intended to be

served raw to consumers, including the use of sulfiting agents in such salad bar or other restaurant foods, will not be permitted after the effective date of that final rule.

The agency is also still evaluating information on other uses of sulfites to decide whether any of them are no longer GRAS. The agency believes that once it has taken all actions on the use of sulfites that it considers necessary, sulfite-sensitive individuals will be adequately protected from unexpected exposure to sulfiting agents in foods.

2. One of the comments that urged stronger regulatory policies requested a mandatory warning statement on the principal display panel of the label.

FDA does not believe that it is necessary to require a warning statement on food labels. Sulfites are safe for most people, and the declaration of sulfiting agents in the list of ingredients will provide sufficient information for those people who need or want to avoid unexpected exposure to sulfites from packaged foods.

Foods Affected by the Proposal

3. Some comments requested clarification as to what foods would actually be covered by the proposal. Most of the confusion regarding the applicability of the proposal centered on foods in which sulfites have a technical or functional effect. Other comments, however, expressed confusion about the proposal's applicability to foods that contain sulfites that are indirectly added and that do not have a technical or functional effect. One comment wanted to know if the proposal applied to raw agricultural commodities as well as processed foods. Another wanted to know if label declaration of sulfiting agents would be required on shipments of food ingredients that would be further processed, mixed, or repackaged before sale to the final consumer. In addition, from the agency's ongoing enforcement activities regarding the use of sulfites in foods, it appears that confusion exists among food manufacturers and processors about how the requirements for labeling sulfiting agents apply to specific foods.

Section 403(k) of the act requires that if a food contains a chemical perservative, it must bear labeling stating that fact. As stated above, section 403(i)(2) of the act and FDA regulations (21 CFR 101.4) require that each ingredient in a food be declared on the label by its common or usual name but section 403(i)(2) also provides that where these declarations are impracticable, exemptions can be established. FDA has establish such an exemption for ingredients described as "incidental additives" in 21 CFR 101.100(a)(3) of its regulations.

Incidental additives may be processing aids (defined in §101.100(a)(3)(ii)), substances that are incorporated in a food as ingredients of another food, or substances that migrate to food from packaging. Regardless of how a substance gets into the food, if it has any technical or functional effect in the food, or if it is present in the food in a significant amount, it does not meet the definition of an incidental additive and is not entitled to the label exemption.

Thus, if a sulfiting agent has a technical or functional effect in the food, it must be declared in the ingredient listing regardless of the amount present. If the sulfiting agent functions as a chemical preservative, the labeling must state this fact in accordance with section 403(k) of the act.

The purpose of the current action is to make clear when sulfites are present in a food in a significant amount. Under §101.100(a)(4), when there is 10 ppm or more of a sulfite in the food, regardless of the source of the sulfite, it is present in a significant amount and must be declared in the ingredient list of the food.

FDA advises that 101.100(a)(4) would be applicable to raw agricultural commodities sold in bulk for consumption in the raw state as well as to processed foods. However, FDA has found that given the circumstances in which sulfites are used on raw agricultural commodities, those commodities cannot be effectively labeled. Consequently, as discussed above, elsewhere in this issue of the **Federal Register**, FDA is publishing a final rule containing the finding that the use of sulfites on fresh fruits and vegetables, except potatoes, is not GRAS. Because such a finding has the effect of prohibiting this use of sulfites, sulfites will cease to be used on most fruits and vegetables sold for consumption in the raw state. The GRAS status of sulfite use on potatoes will be addressed in a separate **Federal Register** document.

As for whether label declaration of sulfiting agents would be required on shipments of food ingredients that are to be further processed, mixed, or repackaged before retail sale, the agency advises that §101.100(d) of its regulations resolves this question. That section provides, among other things, that shipments of food to be processed, labeled, or repacked in substantial quantity need not bear ingredient declarations if there is a written agreement between the shipper and the receiver of the food that contains information necessary for appropriate labeling of the food. Section 101.100(d) is not affected by this final rule. However, while the supplier of an ingredient must provide information for proper declaration of the ingredient in a finished food, the labeler of the finished food is legally responsible for the adequacy of the label (21 U.S.C. 331(a)). Therefore, the labeler has an obligation to ensure that it has the information necessary for appropriate label declarations.

To clarify current requirements for label declaration of sulfites, FDA has found it useful to describe three categories of food products that contain sulfites: (1) Those in which the sulfites are present below a detectable level (10 ppm) and for which there is general agreement that the sulfites present are nonfunctional; (2) those in which the sulfites are present at a detectable level (10 ppm or more) but do not have a technical or functional effect in the food; and (3) those in which the sulfites provide a technical or functional effect in the food. The labels of foods in the first category are not required to declare sulfites as ingredients. The labels of foods in the second category must declare the presence of sulfiting agents, but FDA will not take regulatory action for failure to declare the presence of those ingredients until after January 9, 1987. Foods in the third category have been and will continue to be subject to regulatory action if their labels fail to declare sulfiting agents, regardless of the level at which those substances are present.

Finally, the agency has revised the language of § 101.100(a)(4) to make clear that the 10 ppm criterion for not declaring the presence of a sulfiting agent in a food applies only to sulfiting agents that have no technical or functional effect in the food being labeled. This revision is editorial only and does not change the substance of the paragraph in any way.

Basis for Sulfite Declaration

4. Many of the comments supported declaration of the presence of sulfiting agents when there are significant levels of sulfites in food. However, some comments asserted that the determination about the significance of the levels should be based on biological data rather than, as FDA has proposed, on analytical capability. These comments suggested that FDA consider: (1) That there is a general consensus among scientists that free sulfite is the sensitizing substance, and that bound sulfite does not trigger the kind of adverse reactions reported; (2) that

some of the new sulfite in food is bound and therefore not hazardous to sensitive individuals; (3) that 5 milligrams (mg) of sulfiting agent is the lowest dose documented to have caused an adverse reaction; and (4) that there is a threshold level of sulfite below which no adverse effect has been established.

FDA recognizes that there may be a consensus that free sulfite is the form of sulfite that poses the greatest risk to sensitive individuals. However, the Federation of American Societies for Experimental Biology's (FASEB) ad hoc Review Panel on Reexamination of the GRAS Status of Sulfiting Agents, acknowledged in its report that there was then no information available to show that bound sulfites may not also contribute to the adverse reactions. Since publication of this report, FDA has received preliminary information indicating that bound sulfites may also contribute to adverse reactions in humans. In the interest of consumer protection, therefore, and until more definitive scientific information becomes available, FDA believes that it must take into account the total amount of bound and unbound sulfite in a food.

The agency is also aware that the lowest ingested dose that has resulted in an adverse reaction to date is 5 mg of sulfiting agent. As reported by the Food Research Institute in its comment on the proposal, this instance involved a dose of 5 mg of potassium metabisulfite in a capsule, which is equivalent to about 3 mg sulfar dioxide. For an individual to obtain 3 mg of sulfur dioxide from a food with 10 ppm total sulfur dioxide, the person would have to consume 300 grams of food (about three-fourths of a pound).

The kinds of studies necessary to determine the level at which sulfite-sensitive people react to these substances have been performed on only a small number of individuals. Although FDA accepts the validity of the information provided in the comment, given the paucity of information, the agency does not consider that sufficient evidence is available to enable it to conclude that some sensitive individuals would not react adversely to smaller amounts of sulfite.

The agency also acknowledges that some studies indicate that sensitive individuals tend to tolerate higher levels of a sulfiting agent when it is administered on food than when administered by capsule or other clinical dosage form. However, too few individuals have been tested with sulfiting agents mixed with food to permit conclusions on how, why, or to what extent ingestion with food may influence the reaction to sulfites.

In summary, the agency believes that the available information is inconclusive regarding whether there is a biological threshold level for sulfiting agents below which sensitive individuals will not experience adverse reactions. FDA believes, however, that it must act now to protect sensitive consumers. Accordingly, the agency is not using a biological criterion for determining what constitutes a significant level of sulfites. The criterion for labeling in this regulation is based on analytical capability as stated in the proposal.

5. One comment stated that there are extreme differences in the serving sizes of the foods affected by this regulation. The comment questioned the appropriateness of a single labeling criterion that did not take this variation into consideration.

Variation in serving size would be a significant factor if FDA were basing the labeling criterion on a biological threshold. However, as discussed in paragraph 4 of this preamble, FDA does not believe that it would be appropriate to use a biological threshold as the basis for label declaration of sulfites. The agency considers that the regulatory threshold of 10 ppm sulfite will adequately protect consumers of large servings as well as those who consume several servings of different foods containing sulfiting agents.

6. Some comments expressed concern that if sulfite labeling is based on the limit of detection for sulfite, then the trigger level will be lowered as the detection is lowered.

The agency is aware that much work is currently being done to lower the analytical detection limit for sulfites and to improve specificity. However, FDA wishes to reassure interested persons that it does not have plans to change the definition of a significant amount of sulfite based solely on improvements in methodology, unless justified by new data on the health consequences of sulfites in processed foods.

7. Some comments requested that FDA clarify the term "finished food" as the basis for determining the amount of sulfite present. The comments stated that the food "as served" was the appropriate form for determining sulfite content rather than "as sold." The comments cited juice concentrates, dry mixes, and refrigerated dough as examples of foods for which there was confusion in this regard.

The agency advises that ingredient declarations are based on the food as manufactured or packaged. Historically, FDA's ingredient declaration regulations have required that those substances that have been used to manufacture a food are the ones that are to be included in the ingredient list for that food. The agency has not used the composition of the food at the time of consumption as the basis for ingredient declaration.

Consistent with the agency's historic policy, the nutrient quantities declared in nutrition labeling are based on the food as packaged (21 CFR 101.9(b)). Section 101.9(b) acknowledges that after retail sale some foods will undergo cooking or some other form of preparation during which nutrient quantities may change. Although that regulation permits a separate, additional declaration of the nutrient content of the food as consumed, the primary declaration of nutrient quantity is based on the food as packaged.

Section 101.100(a)(4) is consistent with this policy. These comments did not provide any reason for FDA to deviate from long-established policy in the case of declaration of sulfiting agents. The agency will continue to base any regulatory action on analysis of the food as manufactured or purchased.

Analytical Methodology

8. Many of the comments contended that the analytical methodology cited in the proposal was not suitable for enforcing the 10 ppm labeling criterion.

In selecting analytical methodology for the regulation of sulfites in food, FDA considered the complex nature of sulfite interaction with food. The methodology that FDA has chosen, the Monier-Williams procedure, is the official method of the Association of Official Analytical Chemists (AOAC), described in "Official Methods of Analysis of the Association of Official Analytical Chemists," 14 Ed. (1984), sections 20.123–20.125. FDA selected this method as the enforcement procedure because the analysis will measure the free sulfite plus a reproducible portion of the bound sulfites, such as the carbonyl addition products, in the food.

While it may be preferable to have a method that would measure, in absolute terms, the free sulfite and each of the other sulfite-derived substances in a food, FDA has determined that no such method exists, and that it is unlikely that one will be developed in the near future. Therefore, FDA has selected the Monier-Williams method, which for years has been the standard against which the accuracy of newer procedures has been judged, as the method that it will use for enforcement of the sulfite labeling rule.

The agency recognizes that the Monier-Williams method was not

originally intended to measure sulfite levels as low as 10 ppm. However, FDA has made some refinements in the method that, without changing its chemical principles, improve its accuracy and reproducibility and thus make it suitable for use at 10 ppm. The refinements that FDA has made include using a more dilute titrant and minor modifications in the apparatus. All of these changes, as well as other technical aspects of the analytical methodology, are discussed in detail in "A Report on the Monier-Williams Method for Sulfites in Food" (Monier-Williams Report), prepared by FDA. A copy of this report is on file in the Dockets Management Branch (HFA-305), Food and Drug Administration, Rm. 4-62, 5600 Fishers Lane, Rockville, MD 20857. The modified procedure is described in "Monier-Williams Procedure (with Modifications) for Sulfites in Food" (November 1985) and is also on file in the Dockets Management Branch.

The Monier-Williams method consists of an isolation step and two determinative or quantitation steps. The sulfite is first isolated from the food as sulfite dioxide by distillation using vigorous refluxing in hydrochloric acid. The sulfur dioxide is then quantitated by a titrimetric procedure and sometimes also by a gravimetric procedure. Vigorous refluxing in hydrochloric acid ensures the release of all of the free sulfite and the recovery of a consistent portion of the reversibly bound sulfite (Monier-Williams Report, pp. 4-5). Accordingly, FDA will use the Monier-Williams isolation procedure in determining sulfite content of foods.

FDA has studied the precision of the Monier-Williams method (modified as discussed above) at 10 ppm and at 30 ppm, using three food matrices (fruit juice, shrimp, and hominy) (Monier-Williams Report, pp. 8-10). A statistical evaluation of the test results established that the modified Monier-Williams procedure is capable of determining sulfites in foods at levels of 10 ppm with an overall coefficient of variation ranging from 3.8 percent to 9.8 percent (average 7.0 percent). This range of coefficients of variation at 10 ppm is consistent with those established for other well-recognized regulatory analytical methods at the 10 ppm level.

9. Some comments stated that volatile organic acids and nitrous acid would cause direct interference with the titrimetric quantitative step in the Monier-Williams procedure.

The agency is aware of the potential for these interferences. The Monier-Williams procedure, however, includes a gravimetric quantitation procedure that can be used in addition to the titrimetric procedure. The gravimetric step is free of interference from nitrites or volatile organic acids. When these kinds of interference are suspected in a food sample, e.g., in sugar or a syrup, FDA will use both the titrimetric and gravimetric procedures to assure that the analytical results are not inaccurate because of volatile acid interference.

10. Other comments pointed out that the Monier-Williams method is not capable of distinguishing between naturally occurring sulfite and sulfite added during processing. Some comments cited Brassica and Allium vegetables as examples of foods with naturally occurring sulfites.

Studies in FDA laboratories have demonstrated that onions and cabbage do, in fact, yield sulfur dioxide when subjected to refluxing hydrochloric acid as prescribed by the Monier-Williams method (Monier-Williams Report, pp. 10-11). Analysis of a limited number of fresh onion and cabbage samples has yielded sulfur dioxide responses ranging from 10 to 17 ppm. The agency has determined that the sulfur dioxide-yielding substances are sulfur-containing compounds that decompose in refluxing hydrochloric acid. Therefore, this problem is inherent not only in the Monier-Williams method but also in many other analytical procedures that depend on measurement of sulfur dioxide.

The agency intends to study the quantity of naturally occurring sulfur dioxide-yielding compounds in Allium and Brassica vegetables. Information from this study will be used to establish an upper limit for the natural sulfur dioxide response. FDA will take the existence of natural levels of sulfites into account in determining whether a shipment of food complies with the labeling requirement of this regulation.

The agency has no reason to believe that these naturally occurring sulfur dioxide-yielding compounds would cause adverse reactions in sulfite-sensitive individuals. These foods have been consumed safely. There is no record of sulfite-type adverse reactions to Allium and Brassica vegetables that do not contain added sulfiting agent.

11. Other comments stated that the Monier-Williams procedure gives false-positives.

FDA is aware of this problem in a few instances but believes that it may result from a lack of sample homogeneity or may be a direct consequence of the instability of sulfite. This problem, therefore, is likely to be inherent in any method used to analyze for sulfite. With the Monier-Williams method, careful attention must be given to certain aspects of the analysis. For example, the reflux condenser must be chilled with a very cold coolant. The significant procedures in the analysis are outlined in the Monier-Williams Report. FDA believes that if these significant procedures are properly followed, the Monier-Williams method is reliable.

12. Several comments pointed out that, for a food with about 10 ppm sulfite, the sample size specified in the official AOAC version of the Monier-Williams procedure would be too large to be practical.

FDA advises that reducing a sample size is one of the refinements that the agency has made to make the Monier-Williams procedure appropriate for use at 10 ppm. This change and the others that FDA has made are described in the Monier-Williams Report.

13. A few comments stated that the Monier-Williams procedure was not suitable for quality control use in monitoring sulfite content of foods.

The agency advises that processors are under no obligation to use the designated analytical procedure for quality control or for any other purpose. The agency will, however, use the Monier-Williams procedure as the basis for its enforcement activities. Processors frequently compare the analytical method of their choice to FDA's designated enforcement method and use their method of choice as they see fit.

Other Comments

14. A number of comments requested that FDA provide flexibility in the declaration of sulfiting agents, i.e., relief from the requirement that each sulfiting agent in a food be declared by its common or usual name. The comments argued that flexibility was desirable because (1) the proposed regulation would require declaration of sulfiting agents present as components of ingredients of the finished food; (2) the sulfiting agent in an ingredient might vary among different suppliers of the ingredient; and (3) there may be more than one sulfite-bearing ingredient, and it would be impossible to determine which sulfiting agents contributed to the detectable sulfite in the finished food. Several comments suggested that a collective term like "sulfiting agents" or "sulfur dioxide" would provide labeling flexibility while providing all necessary information to the consumer. One comment suggested using a collective term with "and/or" labeling. Another comment sugested that when a sulfiting agent is added directly to a food that also contains indirectly added sulfite, declaration of the directly added agent by its name should be sufficient. The comment said that it should not be

necessary also to declare the indirectly added sulfiting agents.

With regard to sulfiting agents that are directly added to, or that have a technical effect in, food, the name of the specific sulfiting agent that is added must be declared on the label. However, the agency agrees with the comments that some flexibility is warranted in the declaration of sulfiting agents that are indirectly added to a food and that have no technical or functional effect in the food. An indirectly added sulfite is present in a food as a component of an ingredient in the food, as a processing aid, or as a migrant from food packaging. The purpose of declaring sulfiting agents that are indirectly added and that have no technical or functional effect is to provide information to the consumer who wishes to avoid foods that contain sulfites. FDA believes that there is no reason to expect that one sulfiting agent acts differently from the others in causing adverse reactions. Accordingly, FDA believes that when sulfite is indirectly added to a food and does not have a technical or functional effect in the food, the identity of the specific sulfiting agent is not significant to the sensitive consumer.

In light of this conclusion, the agency considers that a collective term that applies to all six sulfiting agents would provide appropriate labeling flexibility without depriving the consumer of any significant information. Of the collective terms suggested by the comments, FDA considers "sulfiting agents" to be the most accurate and informative. "Sulfur dioxide" is one of the sulfiting agents and use of this term when one or more of the other agents have been used could be misleading. As discussed above, "sulfites" is a relatively informal term whose meaning is not always clear to the reader.

As suggested in a comment, FDA will consider amending the regulation in which collective terms permitted in ingredient declarations are listed (21 CFR 101.4(b)). However, pending promulgation of a provision in § 101.4(b), the agency will not take legal action against foods that declare sulfiting agents as follows: (1) When sulfiting agents that remain in a food in a significant amount but no longer have a technical or functional effect, they may be declared by the term "sulfiting agents;" and (2) when a food contains a sulfiting agent that has a technical or functional effect in the food and that is declared in the list of ingredients by its common or usual name, any nonfunctional sulfiting agents present in the food need not be declared separately in the list of ingredients. However, FDA emphasizes that this flexibility applies only if the sulfite does not perform a technical or functional effect in the food.

15. One comment reflected confusion about the declaration required by this regulation. The comment objected to declaration of the amount of sulfite present in a food.

The agency advises that there is no requirement for quantitative declaration of sulfites. The only information that is required to be included in the label is the name of the sulfiting agent, or, in the circumstances explained above in paragraph 14, the term "sulfiting agents."

16. Some comments requested that there be more than 6 months between publication of the final regulation and its effective date. Some requested a minimum of 12 months, others 18 months. Several comments also requested that FDA use the next uniform effective date because (1) the hazard to sulfite-sensitive individuals from packaged foods is not well-documented; (2) this regulation is a labeling regulation and should have the effectiveness interval usually used for labeling regulations; (3) some sulfited products are packed seasonally, and provision must be made for the timing of the seasons; (4) foreign produce that is contra-seasonal would have an unfair advantage over domestic produce; and (5) more time is necessary for depletion of label inventories.

This labeling regulation has as its basis a serious health concern. Although FDA is sympathetic to the problems processors will encounter with a 6-month interval, it cannot ignore the potential hazard to sulfite-sensitive consumers. Of the approximately 500 complaints from individual consumers who reported adverse responses, 14 percent specifically mentioned having had a reaction after eating processed, packaged food at home. Additionally, in recent months the agency has analyzed a number of foods that contained significant amounts of sulfite but that were not so labeled. This finding emphasizes the need for clarification of the labeling requirements for sulfiting agents as quickly as is feasible to facilitate compliance. The requirement to declare the presence of sulfiting agents on the label when they are added for a technical or functional effect is not changed by this labeling regulation, and therefore the effective date does not apply to these foods. The effective date provision applies to foods affected by this regulation that are initially introduced into interstate commerce. FDA will not take regulatory action against foods subject to this regulation that are already in interstate distribution on the effective date.

17. A trade association for the wine industry commented on this proposal even though labeling of wines is regulated by the Bureau of Alcohol, Tobacco and Firearms (BATF) of the Department of the Treasury. In the **Federal Register** of June 24, 1985 (50 FR 26001), BATF published a proposal that would require declaration of sulfiting agents in beverage alcohol products if the sulfites exceed the amount in FDA's definition of detectable amount (10 ppm). The association acknowledged that wines are under BATF's jurisdiction but commented on FDA's proposal because of BATF's declared reliance on FDA's regulation.

The issues raised in the comment relate directly to wine and have no bearing on the action that FDA is taking. Therefore, FDA is not responding to this comment. The agency considers that it is not appropriate for it to revise its labeling policy for a product that is not subject to that policy and for which it has neither information nor expertise. FDA has, however, forwarded the comment to BATF for its consideration.

18. One comment requested that FDA adopt a policy of Federal preemption for labeling of sulfiting agents. The comment cited several court decisions in support of its argument that preemption was feasible.

The agency does not use its authority to preempt State requirements unless there is a genuine need to stop the proliferation of inconsistent requirements between FDA and the States. FDA is not persuaded that such a need now exists with regard to sulfite labeling. The agency will, however, evaluate any information concerning a need for Federal preemption that is submitted to it and will take appropriate action.

Environmental Impact

The agency has determined under 21 CFR 25.24(b)(7) (April 26, 1985; 50 FR 16636) that this action is of a type that does not individually or cumulatively have a significant effect on the human environment. Therefore, neither an environmental assessment nor an environmental impact statement is required.

Economic Impact

This regulation clarifies an existing regulatory requirement. Therefore, the regulation will have no economic effect. However, because FDA recognizes that there has not been universal compliance with this requirement, the agency

examined, in accordance with Executive Order 12291, the potential economic consequences of requiring that sulfiting agents be declared on the label when present in food in a detectable amount as though this requirement were new. On the basis of available information, the agency determined that this regulation may impose one-time costs of $1.3 million. The agency has not received any new information or comments that would alter its previous determination and, therefore, the agency has determined that the rule is not a major rule as defined by the Order.

Furthermore, FDA, in accordance with the Regulatory Flexibility Act, had considered the effect that this final rule will have on small entities, including small businesses, and has concluded that the regulation will require a label change resulting only in a minimal impact on any individual firm. Approximately 450 small firms may incure costs totaling about $300,000. It is unlikely that any small firms will bear excessive or unreasonable burdens as a result of this regulation. Therefore, FDA certifies in accordance with section 605(b) of the Regulatory Flexibility Act that no significant economic impact on a substantial number of small entities will be caused by this regulation. The agency has not received any new information or comments that would alter its previous determination.

Two comments disagreed with FDA's estimate of the economic impact on this regulation. One comment stated that cost increases would probably exceed $100 million. The comments averred that this impact would result from food manufacturers discontinuing the use of sulfities in their foods to avoid declaring them. Not using sulfities would, one comments stated, result in expensive equipment changes and even in the failure of certain industries.

The agency does not agree that this kind of impact is likely. The comments' arguments are based on the assumption that certain nonsensitive consumers would overreact and avoid foods that declare sulfites in the list of ingredients. Although it is likely that sulfite-sensitive individuals will avoid sulfite-labeled foods, the agency does not believe that such product avoidance will occur among individuals who are not sulfite sensitive. A large number of foods that are currently on the market bear a sulfite declaration, and the agency has not seen any indication that there has been a significant reduction in the marketability of these foods.

In addition, many of the foods that contain a significant amount of sulfities under § 101.100(a)(4) are multi-ingredient foods whose label already declares the presence of several ingredients. The agency has no reason to believe that the addition of one more term to the list of ingredients would significantly affect marketability. Consequently, FDA is not revising its estimate of the economic impact of this action.

List of Subjects in 21 CFR Part 101

Food labeling; Incorporation by reference; Misbranding; nutrition labeling; Warning statements.

Therefore, under the Federal Food, Drug, and Cosmetic Act, Part 101 is amended as follows:

PART 101—FOOD LABELING

1. The authority citation for 21 CFR Part 101 is revised as set forth below and the authority citations under 21 CFR 101.2, 101.3, 101.4, 101.9, 101.10, 101.11, 101.13, 101.17, 101.22, 101.33, 101.105, and 101.108 are removed.

Authority: Secs. 4, 6, Pub. L. 89-755, 80 Stat. 1297, 1299, 1300 (15 U.S.C. 1453, 1455); secs. 403, 701, Pub. L. 717, 52 Stat. 1047-1048 as amended, 1055-1056 as amended (21 U.S.C. 343, 371); 21 CFR 5.10 and 5.11; § 101.11 is issued only under secs. 201(s), 403(p), 409, 701(a), Pub. L. 717, 52 Stat. 1055, 72 Stat. 1784-1788 as amended, 91 Stat. 1453 (21 U.S.C. 321(s), 343(p), 348, 371(a)) and Pub. L. 95-203, 91 Stat. 1451-1454 (21 U.S.C. 301 note); § 101-100(a)(4) is issued only under secs. 403 and 701, 52 Stat. 1047-1048 as amended, 1055-1056 as amended (21 U..C. 343, 371).

2. Section 101.100 is amended by adding new paragraph (a)(4), to read as follows:

§ 101.100 Food; exemptions from labeling.

(a) * * *

(4) For the purposes of paragraph (a)(3) of this section, any sulfiting agent (sulfur dioxide, sodium sulfite, sodium bisulfite, potasssium bisulfite, sodium metabisulfite, and potassium metabisulfite) that has been added to any food or to any ingredient in any food and that has no technical effect in that food will be considered to be present in an insignificant amount only if no detectable amount of the agent is present in the finished food. A detectable amount of sulfiting agent is 10 parts per million or more of the sulfite in the finished food. Compliance with this paragraph will be determined using sections 20.123-20.125, "Total Sulfurous Acid," in "Official Methods of Analysis of the Association of Official Analytical Chemists," 14th Ed. (1984), which is incorporated by reference and the refinements of the "Total Sulfurous Acid" procedure in the "Monier-Williams Procedure (with Modifications) for Sulfites in Foods," which is Appendix A to Part 101. A copy of sections 20.123-20-125 of the Official Methods of Analysis of the Association of Official Analytical Chemists" is available from the Association of Official Analytical Chemists, P.O. Box 540, Benjamin Franklin Station, Washington, DC 20044, or available for inspection at the Office of the Federal Register, 1100 L Street NW., Washington, DC 20408.

* * * * *

3. Appendix A is added to Part 101 to read as follows:

Appendix A for Part 101—Monier-Williams Procedure (With Modifications) for Sulfites in Food, Center for Food Safety and Applied Nutrition, Food and Drug Administration (November 1985)

The AOAC official method for sulfites (*Official Methods of Analysis*, 14th Edition, 20.123-20.125, Association of Official Analytical Chemists) has been modified, in FDA laboratories, to facilitate the determination of sulfites at or near 10 ppm in food. Method instructions, including modifications, are described below.

Apparatus—The apparatus shown diagrammatically (Figure 1) is designed to accomplish the selective transfer of sulfur dioxide from the sample in boiling aqueous hydrochloric acid to a solution of 3% hydrogen peroxide. This apparatus is easier to assemble than the official apparatus and the back pressure inside the apparatus is limited to the unavoidable pressure due to the height of the 3% H_2O_2 solution above the tip of the bubbler (F). Keeping the backpressure as low as possible reduces the likelihood that sulfur dioxide will be lost through leaks.

The apparatus should be assembled as shown in Fig. 1 with a thin film of stopcock grease on the sealing surfaces of all the joints except the joint between the separatory funnel and the flask. Each joint should be clamped together to ensure a complete seal throughout the analysis. The separatory funnel, B, should have a capacity of 100 ml or greater. An inlet adapter, A, with a hose connector (Kontes K-183000 or equivalent) is required to provide a means of applying a head of pressure above the solution. (A pressure equalizing dropping funnel is not recommended because condensate, perhaps with sulfur dioxide, is deposited in the funnel and the side arm.) The round bottom flask, C, is a 1000 ml flask with three 24/40 tapered joints. The gas inlet tube, D, (Kontes K-179000 or equivalent) should be of sufficient length to permit introduction of the nitrogen within 2.5 cm of the bottom of the flask. The Allihn condenser, E, (Kontes K-431000-2430 or equivalent) has a jacket length of 300 mm. The bubbler, F, was fabricated from glass according to the dimensions given in Fig. 2. The 3% hydrogen peroxide solution can be contained in a vessel, G, with an i.d. of *ca.* 2.5 cm and a depth of 18 cm.

Buret—A 10 ml buret (Fisher Cat. No. 03-848-2A or equivalent) with overflow tube and hose connections for an Ascarite tube or equivalent air scrubbing apparatus. This will permit the maintenance of a carbon dioxide-

free atmosphere over the standardized 0.01*N* sodium hydroxide.

Chilled Water Circulator—The condensor must be chilled with a coolant, such as 20% methanol-water, maintained at 5 °C. A circulating pump equivalent to the Neslab Coolflow 33 is suitable.

Reagents

(a) *Aqueous hydrochloric acid, 4N.*—For each analysis prepare 90 ml of hydrochloric acid by adding 30 ml of concentrated hydrochloric acid (12N) to 60 ml of distilled water.

(b) *Methyl red indicator.*—Dissolve 250 mg of methyl red in 100 ml ethanol.

(c) *Hydrogen peroxide solution, 3%.*—Dilute ACS reagent grade 30% hydrogen peroxide to 3% with distilled water. Just prior to use, add three drops of methyl red indicator and titrate to a yellow end-point using 0.01*N* sodium hydroxide. If the end-point is exceeded discard the solution and prepare another 3% H_2O_2 solution.

(d) *Standardized titrant, 0.01N NaOH.*—Certified reagent may be used (Fisher SO-5-284). It should be standardized with reference standard potassium hydrogen phthalate.

(e) *Nitrogen.*—A source of high purity nitrogen is required with a flow regulator that will maintain a flow of 200 cc per minute. To guard against the presence of oxygen in the nitrogen, an oxygen scrubbing solution such as an alkaline pyrogallol trap may be used. Prepare pyrogallol trap as follows:

1. Add 4.5 g pyrogallol to the trap.
2. Purge trap with nitrogen for 2 to 3 minutes.
3. Prepare a KOH solution prepared by adding 65g KOH to 85 ml distilled water (caution: heat).
4. Add the KOH solution to the trap while maintaining an atmosphere of nitrogen in the trap.

Determination

Assemble the apparatus as shown in Fig. 1. The flask C must be positioned in a heating mantle that is controlled by a power regulating device such as Variac or equivalent. Add 400 ml of distilled water to flask C. Close the stopcock of separatory funnel, B, and add 90 ml of 4*N* hydrochloric acid to the separatory funnel. Begin the flow of nitrogen at a rate of 200±10 cc/min. The condenser coolant flow must be initiated at this time. Add 30 ml of 3% hydrogen peroxide, which has been titrated to a yellow end-point with 0.01*N* NaOH, to container G. After fifteen minutes the apparatus and the distilled water will be thoroughly de-oxygenated and the apparatus is ready for sample introduction.

Sample preparation (solids)—Transfer 50 g of food, or a quantity of food with a convenient quantity of SO_2 (500 to 1500 mcg SO_2), to a food processor or blender. Add 100 ml of 5% ethanol in water and briefly grind the mixture. Grinding or blending should be continued only until the food is chopped into pieces small enough to pass through the 24/40 point of flask C.

Sample preparation (liquids)—Mix 50 g of the sample, or a quantity with a convenient quantity of SO_2 (500 to 1500 mcg SO_2), with 100 ml of 5% ethanol in water.

Sample introduction and distillation—Remove the separatory funnel B, and quantitatively transfer the food sample in aqueous ethanol to flask C. Wipe the tapered joint clean with a laboratory tissue, apply stopcock grease to the outer joint of the separatory funnel, and return the separatory funnel, B, to tapered joint flask C. The nitrogen flow through the 3% hydrogen peroxide solution should resume as soon as the funnel, B, is re-inserted into the appropriate joint in flask C. Examine each joint to ensure that it is sealed.

Apply a head pressure above the hydrochloric acid solution in B with a rubber bulb equipped with a valve. Open the stopcock in B and permit the hydrochloric acid solution to flow into flask C. Continue to maintain sufficient pressure above the acid solution to force the solution into the flask C. The stopcock may be closed, if necessary, to pump up the pressure above the acid and then opened again. Close the stopcock before the last few milliliters drain out of the separatory funnel, B, to guard against the escape of sulfur dioxide into the separatory funnel.

Apply the power to the heating mantle. Use a power setting which will cause 80 to 90 drops per minute of condensate to return to the flask from condenser, E. After 1.75 hours of boiling the contents of the 1000 ml flask and remove trap G.

Titration.—Titrate the contents with 0.01*N* sodium hydroxide. Titrate with 0.01*N* NaOH to a yellow end-point that persists for at least twenty seconds. Compute the sulfite content, expressed as micrograms sulfur dioxide per gram of food (ppm) as follows:

$$ppm = (32.03 \times V_B \times N \times 1000) \div Wt$$

where 32.03 = milliequivalent weight of sulfur dioxide; V_B = volume of sodium hydroxide titrant of normality, N, required to reach endpoint; the factor, 1000, converts milliequivalents to microequivalents and Wt = weight (g) of food sample introduced into the 1000 ml flask.

BILLING CODE 4160-01-M

Figure 1. The optimized Monier-Williams apparatus. Component identification is given in text.

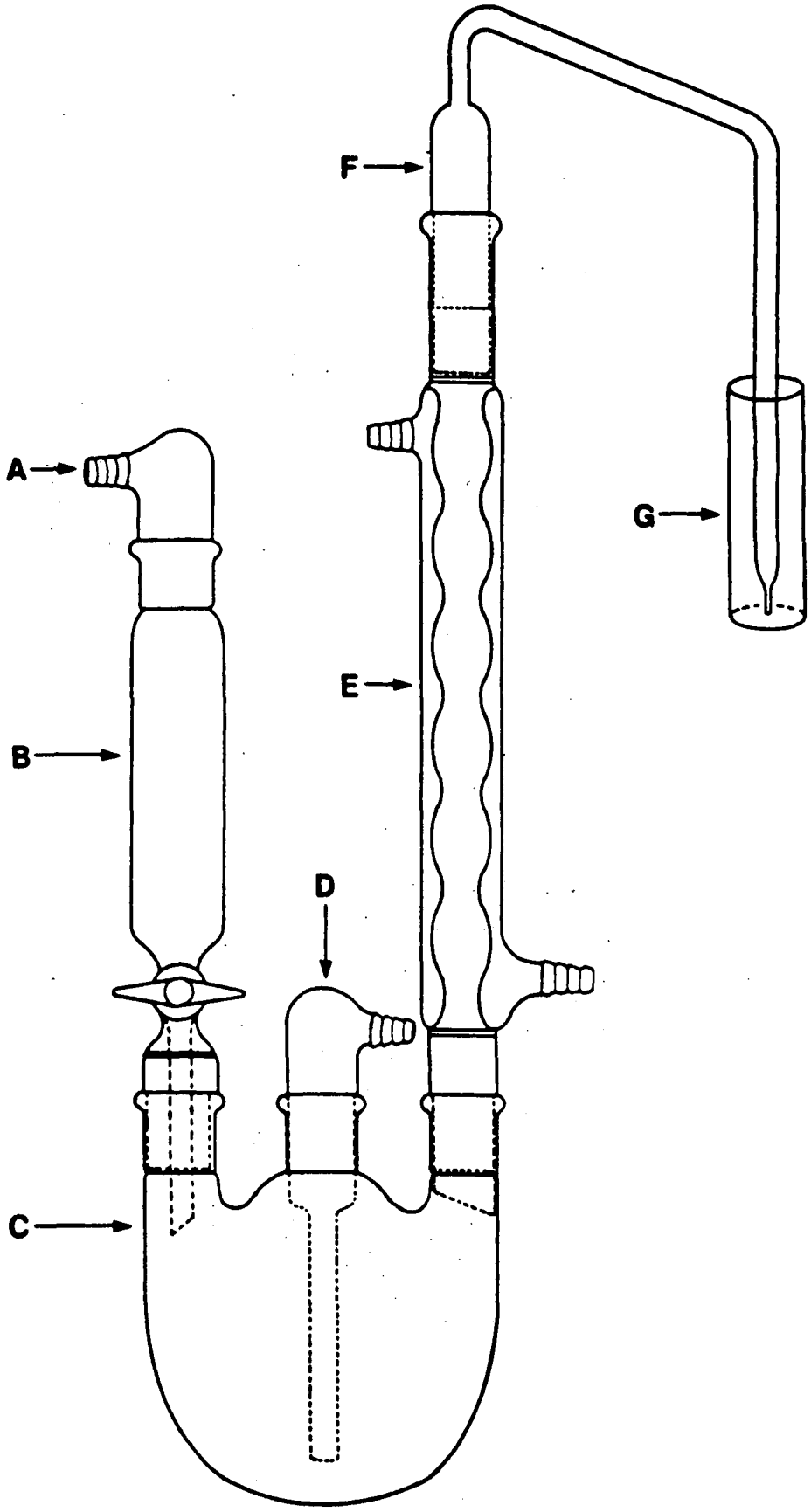

Figure 2. Diagram of bubbler (F in Figure 1). Lengths are given in mm.

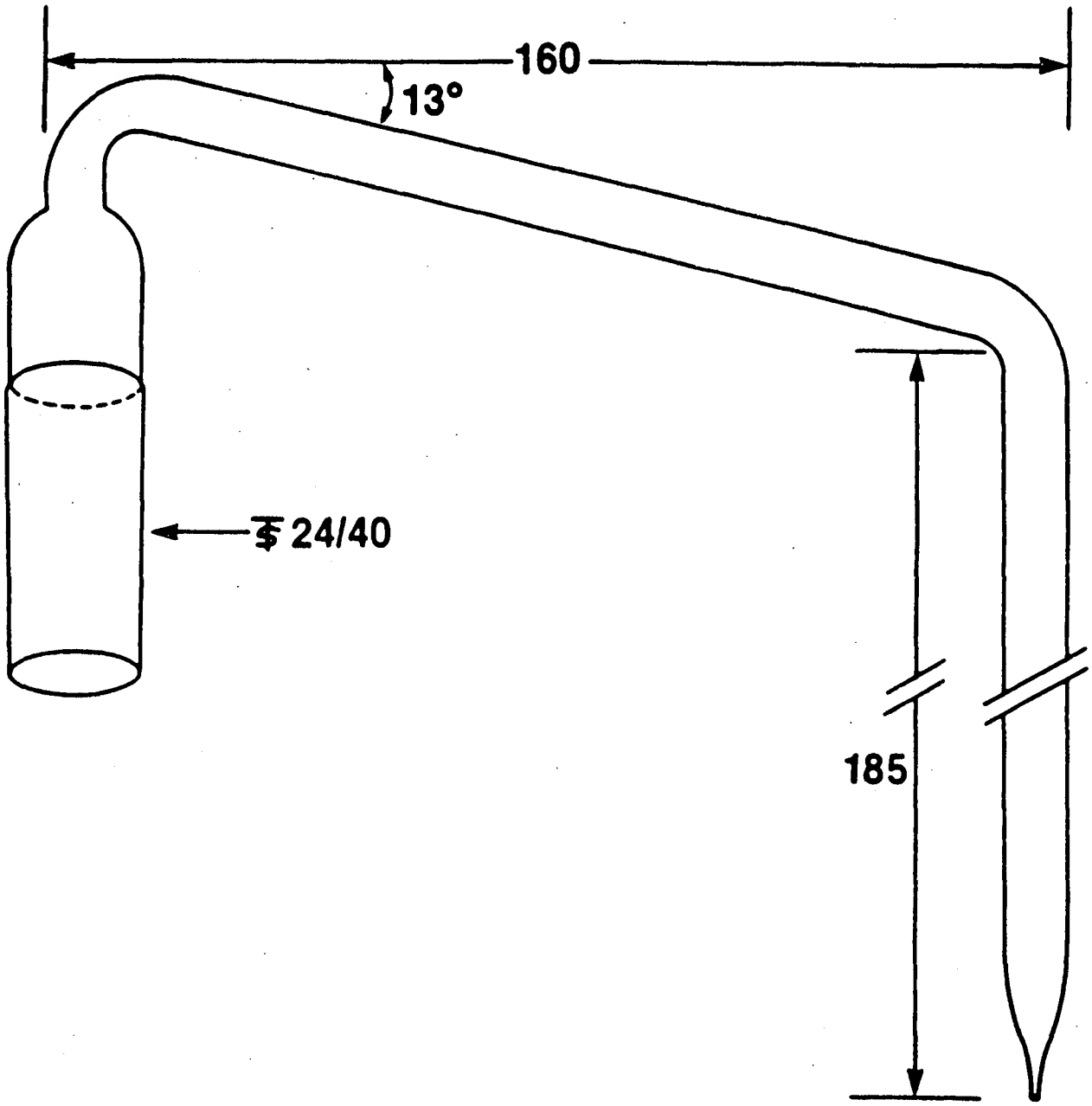

Frank E. Young,
Commissioner of Food and Drugs.
Otis R. Bowen,
Secretary of Health and Human Services.
Dated: June 11, 1986.
[FR Doc. 86-15390 Filed 7-8-86; 8:45 am]
BILLING CODE 4160-01-M

21 CFR Part 182

[Docket No. 81N-0314]

Sulfiting Agents; Revocation of GRAS Status for Use on Fruits and Vegetables Intended To Be Served or Sold Raw to Consumers

AGENCY: Food and Drug Administration.

ACTION: Final rule.

SUMMARY: The Food and Drug Administration (FDA) is amending the regulations on sulfur dioxide, sodium sulfite, sodium and potassium bisulfite, and sodium and potassium metabisulfite (collectively known as "sulfiting agents" or "sulfites") to except their use on fruits and vegetables intended to be served raw or sold raw to consumers, or to be presented to consumers as fresh, from the uses of these substances that are generally recognized as safe (GRAS). This action is based upon FDA's review of comments and information received in response to a proposal to revoke the GRAS status of this use of sulfiting agents. FDA concludes that there does not currently exist a consensus that this use of sulfites is safe.

EFFECTIVE DATE: August 8, 1987.

FOR FURTHER INFORMATION CONTACT: Mary C. Custer, Center for Food Safety and Applied Nutrition (HFF-334), Food and Drug Administration, 200 C St. SW., Washington, DC 20204. 202-426-9463.

SUPPLEMENTARY INFORMATION:

I. Background.

In the **Federal Register** of August 14, 1985 (50 FR 32830), FDA announced its preliminary conclusion that there is no longer a basis to find that the use of sulfites as preservatives on fruits and vegetables intended to be served raw or sold raw to consumers is GRAS and proposed to amend 21 CFR Part 182 to exclude this use of sulfites from those that are listed as GRAS under Part 182.

FDA published its preliminary conclusion after reviewing new information on sulfiting agents from a variety of sources, including: (1) Comments on the proposal to affirm the GRAS status of sulfiting agents published in the **Federal Register** of July 9, 1982 (47 FR 29956); (2) the January 31, 1985, final report of the Federation of American Societies for Experimental Biology (FASEB) on the Reexamination of the GRAS Status of Sulfiting Agents; (3) recently published reports in the medical literature; and (4) consumer complaints received by the agency.

Copies of all data referenced in the proposal and other documents used in developing the proposal were available for public review in the Dockets Management Branch (HFA-305), Food and Drug Administration, Rm. 4-62, 5600 Fishers Lane, Rockville, MD 20857. FDA allowed a period of 30 days during which interested persons could review the proposal and other relevant information and file written comments.

II. Comments

FDA received 553 comments in response to the proposal. Individual consumers submitted 497 of these comments. The remaining comments were submitted by medical professionals (17); scientists (3); State and local health departments (8); State government officials (2); medical associations (4); food manufacturers, processors, or retailers (9); industry trade associations (9); a public health association; a government agency; a member of Congress; and a consumer group. Almost all of the comments agreed with FDA's preliminary conclusion that the use of sulfites as a preservative on fruits and vegetables intended to be served raw or sold to consumers is not GRAS. Most of the comments from consumers requested that FDA revoke the GRAS status of the use of sulfites in all foods. Some of the comments from industry requested modifications of the proposed regulation to exempt specific types of fresh fruits and vegetables from the final regulation. The issues raised in the comments and the agency's responses follow.

A. Adequate Protection for Sensitive Individuals

1. All of the comments submitted by consumers (497) supported the proposed GRAS revocation. More than half of these consumers (306) reported that either they or a close relative or friend is sensitive to sulfite-treated foods. Many described adverse reactions of varying severity to foods that they knew contained sulfites or to foods that they believed contained sulfites. A few consumers requested that FDA also prohibit the use of sulfiting agents on certain specific foods, including all restaurant food, seafood, beer, potatoes, frozen food, and wine. The majority of consumers (315), however, requested that the agency prohibit the use of the sulfiting agents on all food products. Some consumers (46) requested that the agency at least curtail the use of sulfites or require full disclosure of the use of sulfiting agents if a ban on particular food uses or all food uses of sulfites is not feasible.

All but 1 of the 21 comments submitted by medical professionals or medical associations supported the proposed GRAS revocation. One medical professional opposed the proposed action on the basis that sulfites contribute to the overall cleanliness of salad bars. Six medical professionals reported that either they or a close relative or patients under their care were sensitive to sulfites. A majority of medical professionals (11) requested that FDA prohibit the use of the sulfiting agents on all food products.

All 13 comments submitted by State health departments, local health departments, government agencies, the member of Congress, State officials, and public health associations supported the proposed GRAS revocation. Two of the State health departments stated that laws prohibiting the use of sulfites on fresh fruits and vegetables were in effect in their States. Four of these comments referred to surveys showing that a majority of the establishments that were using sulfites were not notifying consumers of this practice, even though in some instances, such notification was required by State law. Three States and a public health association requested that FDA either prohibit or limit the use of sulfites on potatoes, while two State officials requested that FDA prohibit the use of sulfites in all foods.

Nine of the 18 comments submitted by industry or industry trade associations supported the proposed GRAS revocation. One of these comments also requested that FDA prohibit the use of sulfites in all foods.

A consumer group asked FDA to revoke the GRAS status of all food uses of sulfites unless a particular use performs an essential public health function for which there is no adequate substitute. The comment further stated that ingredient labeling alone is inadequate given the severity of some of the reported responses and the number of individuals that may be at risk.

Based upon its tentative conclusion that a consensus no longer exists that the use of sulfites on fresh fruits and vegetables is safe, FDA proposed to remove this use from the list of uses of these substances that are GRAS. The vast majority of comments from experts qualified by scientific training and experience to evaluate the safety of this use agreed that the use of sulfites on fresh fruits and vegetables is not safe. Therefore, the agency finds that its tentative conclusion is correct, and that

the use of sulfites on fresh fruits and vegetables is not GRAS.

The agency is currently evaluating other information on sulfites in order to decide whether any other uses of these ingredients should be excluded from GRAS status. The agency intends to address the GRAS status of all other uses of sulfiting agents, including their use on potatoes and potato products, in the near future. In addition, elsewhere in this issue of the **Federal Register**, FDA is publishing a final rule that requires that all packaged foods that contain 10 parts per million (ppm) or more of sulfur dioxide equivalents be labeled to disclose the presence of the sulfiting agent (50 FR 13306; April 3, 1985).

2. A few consumer comments requested mandatory warning statements regarding sulfites in restaurants or on packaged, processed foods.

The agency believes that the action it is taking in this final rule will afford more effective protection for sulfite-sensitive individuals than mandatory warning statements in restaurants. This conclusion is based upon the results of FDA's efforts to encourage retail food establishments to disclose the use of sulfites via placards or notes on menus. The lack of effectiveness of this FDA labeling recommendation is reflected in several of the comments submitted by health departments and reviewed in paragraphs 1 and 10 of this preamble. As shown by the surveys discussed in these comments, comprehensive enforcement of the agency's labeling recommendation has proven difficult. Therefore, FDA concludes that at least in the case of sulfite-treated fresh fruits and vegetables, labeling requirements, including warning statements, will not afford adequate protection to sulfite-sensitive individuals.

The issue of sulfite declaration on packaged, processed foods is addressed in the final rule that is published elsewhere in this issue of the **Federal Register**. For the reasons discussed in that document, FDA finds that it is not necessary to require warning statements regarding sulfites on packaged foods that contain these ingredients.

B. Foods Affected by the Proposal

3. Some comments requested clarification as to which foods would be covered by the proposal. Some of the confusion regarding the applicability of the proposal centered on foods that are blanched and require further cooking before consumption, such as some frozen vegetables. One comment suggested that the agency insert the word "unblanched" in parenthesis after the word "raw" in the regulation and add the statement "and which are intended to be consumed without further cooking" at the end of the regulation.

The regulation is not intended to apply to blanched products that are to be further cooked before consumption, but it will apply to raw, frozen foods that are simply thawed before consumption, such as frozen guacamole and some frozen fruits. The agency believes that the coverage of the regulation is already clear, and that additional language in the regulation is not needed.

4. One comment inquired whether the proposal covered raw produce that is sold to consumers in labeled packaging. A second comment requested that FDA specifically exclude this type of produce from the proposed GRAS revocation.

The regulation covers packaged raw produce. As explained in the proposal, consumers do not generally expect raw fruits and vegetables that have the appearance of freshness to contain preservatives. In addition, because the majority of raw fruits and vegetables sold in grocery stores are sold in bulk and are not usually labeled, consumers are not likely to associate raw produce with the presence of preservatives such as sulfiting agents. Therefore, FDA believes that it would not be in the public interest to exclude raw, packaged produce from the coverage of this action, and the agency has not adopted this suggestion in the final regulation.

5. One processor requested that FDA permit distribution of frozen guacamole (avocado) until stock produced before August 14, 1985, is exhausted. The processor estimated that its product would probably not be fully distributed until September 1986.

This regulation has as its basis a serious health concern. Although FDA is aware that a few processors may encounter problems with the effective date of this regulation, the agency believes that in this instance, addressing the potential hazards to sulfite-sensitive individuals must take precedence over processors' problems arising from distribution and depletion of existing stocks. Therefore, FDA is not granting any exemption for existing stock from the effective date of the final rule.

C. Alternative Regulatory Actions

6. Several comments expressed the opinion that the agency appeared to be relying on anecdotal evidence and requested that action on the proposed GRAS revocation await the results of further scientific research. Some comments suggested that FDA should encourage and initiate research designed to develop alternatives to sulfites, to characterize the specific chemical reactions that occur between sulfites and other food components, and to determine the role of free and bound sulfites in triggering allergic-type responses in susceptible individuals. The comments also urged FDA to encourage clinical research designed to ascertain safe threshold doses of sulfite-treated foods for sulfite-sensitive individuals.

FDA recognizes the value of the suggested research initiatives and does encourage efforts to develop useful information about the safety of the use of sulfites in food. Furthermore, in the proposal, FDA specifically requested evidence as to whether an association exists between exposure to sulfites on fresh fruits and vegetables and adverse responses in sulfite-sensitive individuals. However, no substantive data regarding the safe use of sulfites on raw, fresh fruits and vegetables were submitted in response to this request.

The agency did receive, and subsequently deny, a request to extend the comment period through December 31, 1985, with respect to raw mushrooms. This request stated that studies on the risks from sulfite-treated raw mushrooms to sulfite-sensitive individuals would be initiated in about mid-October 1985.

As noted above, the purpose of this regulation is to respond to a serious health concern. Although the agency encourages the type of research mentioned in the extension request, such research could take years to complete. Potential hazards to sulfite-sensitive individuals will continue while such research is being conducted. For this reason, the agency is not postponing action on the GRAS status of the use of sulfites on fresh fruits and vegetables pending completion of further scientific research. However, once this research has been completed, the results can be submitted for agency review to determine whether the use of sulfites on fresh mushrooms has been shown to be safe through scientific procedures, and whether this use can be restored to GRAS status.

7. A few comments opposed the proposed regulation and suggested that the agency adopt alternative regulatory action. One comment requested that the agency set good manufacturing practice maximum residue levels for individual raw commodities at the point of consumption. This comment also requested that FDA establish safe levels of free or bound sulfites for each commodity. A second comment stated that all uses of sulfites on raw produce have not been confirmed as hazardous, and that some raw produce with low

sulfite residues will not be hazardous. The comment requested that FDA allow sulfite use on raw produce with nonhazardous residues.

FDA finds that it is not possible to adopt any of the alternate regulatory approaches suggested in the comments. The agency believes that the available information is inconclusive as to whether there is a threshold level of sulfiting agents below which sensitive individuals will not experience adverse reactions and as to how high that level might be. The agency is aware that, in the testing of sulfites that has been done, the lowest ingested dose that has resulted in an adverse reaction is 5 miligrams of potassium metabisulfite in a capsule, which is equivalent to about 3 milligrams of sulfur dioxide. Although FDA accepts the validity of this information, the kinds of studies necessary to determine the level at which sulfite-sensitive people react to sulfites have been performed on a relatively small number of individuals. The agency does not consider that sufficient evidence is available to conclude that some sensitive individuals would not react adversely to smaller amounts of sulfite.

The agency also acknowledges that some studies indicate that sensitive individuals tolerate higher levels of a sulfiting agent when it is administered in food than when administered by capsule or other clinical dosage form. However, too few individuals have been tested with sulfite-treated food to permit conclusions as to how or why or to what extent ingestion with food matrix influence the reaction to sulfites. Therefore, FDA finds that, given currently available information, it is not possible to set good manufacturing practice or other types of nonhazardous residue levels for sulfites.

FDA recognizes that there may be a consensus that free sulfite is the form of sulfite that poses the greatest risk to sensitive individuals. However, the Federation of American Societies for Experimental Biology's (FASEB) ad hoc Review Panel on Reexamination of the GRAS status of Sulfiting Agents, acknowledged in its report that there was then no information available to show that bound sulfites may not also contribute to the adverse reactions. Since publication of this report, FDA has received preliminary information indicating that bound sulfites may also contribute to adverse reactions in humans. In the interest of consumer protection, therefore, and until more definitive scientific information becomes available, FDA believes that it must take into account the total amount of bound and unbound sulfite in a food.

FDA believes that resolution of the issues that bear on a safe level of sulfite use will not be forthcoming in the near future. The resolution of these issues is dependent upon clinical research involving human subjects and considerable time and effort. It is FDA's obligation, however, to act now to protect sensitive individuals. Accordingly, the agency is adopting a regulatory course of action regarding raw produce that does not depend upon the establishment of safe tolerance levels for specific raw commodities. As stated in the response to the previous comment (6), if data regarding the establishment of a safe tolerance level of sulfite for a raw commodity become available, they may be submitted for agency review as part of a GRAS or food additive petition.

D. Other Issues

8. One comment requested that the agency clearly define the term "consumer," and that the agency specifically state whether this term includes intermediate food processors.

The agency advises that in the current regulation, "consumer" refers to the individual who purchases food for consumption, and that this term does not include intermediate food processors.

9. One issue about which FDA specifically requested information was whether there are alternatives to the use of sulfites on fresh fruits and vegetables.

Although some comments contained references to alternatives to the use of sulfites, no new information on this issue was submitted in response to the proposal. Two comments contended that no practical alternative to the use of sulfites on fresh mushrooms exists. However, these comments did not submit any new information or controlled studies in support of their contention. On the other hand, another comment from a mushroom grower supported the proposed GRAS revocation and stated that it had successfully discontinued its use of sulfites. Another industry comment submitted information on the use of citric acid, erythorbic acid, and ascorbic acid as alternatives for sulfites on fresh vegetables. However, this information had been evaluated by the agency before it drafted the proposed regulation. Nevertheless, the existence of these alternatives shows that FDA's action will not have a major negative impact on the food industry.

10. Another issue about which FDA specifically requested information was the extent to which food-service establishments, grocery stores, and produce handlers currently use sulfiting agents on fresh fruits and vegetables.

Several comments discussed various aspects of this issue. Three comments included information derived from official or unofficial surveys on the use of sulfites in food-service establishments and grocery stores. One official State survey found that approximately 15 percent of the surveyed establishments used sulfiting agents. Another unofficial State survey found that a substantial number of restaurants were using sulfiting agents without providing public notice of this practice.

A third State survey, taken in 1983 and repeated in 1985, revealed that in 1983, 9 percent of the surveyed retail establishments used sulfiting agents. The survey found that by 1985, this figure had dropped to 1 percent, but that 9 percent of the surveyed establishments were purchasing products that had been sulfited at the wholesale level. A fourth survey revealed that 10 percent of the more than 2,000 surveyed establishments used sulfiting agents, and that 90 percent of these users were not notifying patrons of this use. One comment discussed the extent of use of sulfites on fresh mushrooms in one county in Pennsylvania, and another comment included a December 1984 survey of fresh produce handlers that had previously been submitted to and evaluated by the agency.

The information in these comments is consistent with the agency's understanding of the use of sulfites, as discussed in the August 14, 1985, proposal (50 FR 32830). The information presented in these comments provides further evidence that voluntary efforts to discontinue the use of sulfites have not been fully successful, and that the use of sulfites on fresh fruits and vegetables is not being declared at the retail level. Consequently, this information provides further support for FDA's conclusion that it must find that this use of sulfites is not GRAS.

11. A trade association for the wine industry commented on the use of sulfites in wines even though this use is not the subject of this regulation.

Because the issues discussed in the comment deal specifically with wine, and have no direct bearing on the use of sulfites in fresh fruits and vegetables, FDA is not responding to this comment in this rulemaking. FDA will respond to these issues when it publishes a document addressing the safety of all other food uses of sulfites.

12. Thirty-eight comments addressed the use of sulfites in drugs.

Because the issues discussed in these comments deal specifically with the use of sulfites in drugs, and because FDA recently published a proposed rule addressing this use of sulfites (November 19, 1985; 50 FR 47558), FDA is not responding to these issues in this rulemaking. FDA has, however, included these comments in the public record on that proceeding and will respond to them when it publishes a final rule regarding the use of sulfites in drugs.

13. After the close of the official comment period, a trade association submitted a report regarding the prior sanction status of sulfiting agents in foods. The submitter purported to document the existence of prior sanctions for the use of sulfiting agents on many specific foods including fresh fruits and vegetables. The submitter stated that the report was intended for use by any party that might wish to assert prior sanctions for certain sulfite uses.

No party has chosen to assert a prior sanction in connection with this rulemaking. However, as stated in the proposal, the agency believes that if a prior sanction does exist for the use of sulfiting agents on fruits and vegetables intended to be served raw or sold raw, reliance on that sanction would not be sufficient justification to continue this use of sulfiting agents. While a prior sanction may exempt a substance from being a food additive under section 201(s) of the Federal Food, Drug, and Cosmetic Act (the act) (21 U.S.C. 321(s)), it does not exempt the substance from the adulteration provisions of the act. FDA believes that recent information demonstrates that this use of sulfiting agents may be injurious to a significant number of people, and that the use of sulfiting agents on fruits and vegetables intended to be served raw to consumers or sold raw to consumers would cause the food to be adulterated under section 402(a)(1) of the act (21 U.S.C. 342(a)(1)).

III. Federal Advisory Committee on Hypersensitivity to Food Constituents

The phenomenon of allergic-type reactions to food ingredients presents numerous issues that are broader in scope than those that are the subject of this document. Thus, in the **Federal Register** of April 16, 1983 (49 FR 10521), FDA announced that the Secretary of the Department of Health and Human Services has established an ad hoc Advisory Committee on Hypersensitivity to Sulfiting Agents in Foods (now the Advisory Committee on Hypersensitivity to Food Constituents) to function under FDA's Center for Food Safety and Applied Nutrition. The committee is reviewing and evaluating available information and data relevant to the adverse reactions in humans that are associated with food ingredients, including sulfiting agents. The committee will make appropriate recommendations to the Commissioner of Food and Drugs.

The committee met on December 12 and 13, 1985, to review specifically the available information on the use of sulfiting agents in food. The committee generally supported FDA's proposal to rescind the GRAS status of the use of sulfites on fresh fruits and vegetables (Ref. 1). However, it also encouraged FDA to include fresh potatoes in this action and to exclude fresh mushrooms and table grapes provided those two commodities comply with maximum residual levels of 10 parts per million total sulfur dioxide equivalents.

FDA has considered the recommendations made by the committee. Because the order set forth below addresses only the use of sulfiting agents in fruits and vegetables intended to be served raw or sold raw to consumers, the agency will respond here only to the recommendations regarding grapes and mushrooms. FDA will respond to the recommendation regarding potatoes in a future **Federal Register** document.

As noted in the proposal, the use of sulfiting agents on grapes is not included in this action. When used on grapes, sulfiting agents are used as a fungicide on a raw agricultural commodity. Therefore, this use is subject to regulation by the Environmental Protection Agency (EPA) under the Federal Insecticide, Fungicide, and Rodenticide Act (7 U.S.C. 136 et seq.) and not to regulation by FDA. FDA has provided EPA with a copy of the transcript of the committee's meeting of December 12 and 13, as well as copies of all information in FDA's files regarding this use. EPA has initiated its own review and evaluation of the safety of the use of sulfites on grapes.

FDA has evaluated the committee's request regarding fresh mushrooms in conjunction with other information on this use of sulfites that has been submitted to the agency. A mushroom trade association submitted information showing mushrooms, treated according to a procedure identified as standard industry practice, contain from 31 to 72 parts per million residual sulfur dioxide equivalents immediately after treatment, and that these levels do not drop below 10 parts per million until the mushrooms have been stored for at least 25 hours. The same comment also stated that research aimed at determining whether these residual levels of sulfur dioxide are safe would be conducted.

FDA encourages such research, because, as stated above, available information is inconclusive as to whether there is a threshold level of sulfiting agents below which sulfite-sensitive individuals will not experience adverse reactions and as to how high that level might be. Until such information is forthcoming, FDA believes that it would not be in the public interest to exempt mushrooms from this regulation revoking the GRAS status of this use of sulfiting agents.

Moreover, data collected by FDA's Philadelphia District Office show that only 14 percent of the mushroom growers or distributors in Delaware and Pennsylvania were applying sulfites to fresh mushrooms in 1985 (Ref. 2). This area produces about 40 percent of the total U.S. production of fresh mushrooms and is generally regarded as likely to contain the highest number of growers or distributors that apply sulfites. Furthermore, producers who currently market clean mushrooms that have not been chemically washed state that certain inexpensive cultivating and harvesting techniques can be used as a substitute for sulfite washes. Thus, data show that the use of sulfite washes for mushrooms is not widespread and that adequate substitutes exist.

Therefore, the agency is not adopting the committee's recommendation regarding fresh mushrooms.

IV. Conclusion on Safety

After evaluating the issues and information presented in the comments on the proposal and all other available evidence, the agency has determined that a consensus does not exist that the use of sulfiting agents is safe in fruits and vegetables intended to be served raw or sold raw to consumers. As a result, FDA concludes that this use of sulfites can no longer be considered to be GRAS. Therefore, the agency is amending Part 182 to exclude the use of sulfiting agents on fruits and vegetables intended to be served raw or sold raw to consumers, or to be presented to consumers as fresh, from the uses of sulfiting agents that are GRAS. The use of sulfiting agents on fruits and vegetables intended to be served raw or sold raw to consumers, or to be presented to consumers as fresh, would constitute the use of unapproved food additives and would, therefore, cause any food to which they have been added to be adulterated and in violation of section 402(a)(2)(C) of the act (21 U.S.C. 342(a)(2)(C)). Should someone claim that a prior sanction exists for this use of

sulfites, addition of sulfites to fruits and vegetables intended to be served raw or sold raw to consumers would still be illegal because it would render the food adulterated under section 402(a)(1) of the act.

V. Procedural Considerations

The agency has previously considered the environmental effects of this rule as announced in the proposal (August 14, 1985; 50 FR 32830). No new information or comments have been received that would affect the agency's previous determination that there is no significant impact on the human environment and that an environmental impact statement is not required.

In accordance with the Regulatory Flexibility Act, the agency previously considered the potential effects that this rule would have on small entities, including small businesses. In accordance with section 605(b) of the Regulatory Flexibility Act, the agency has determined that no significant impact on a substantial number of small entities would derive from this action. FDA has not received any new information or comments that would alter its previous determination.

In accordance with Executive Order 12291, FDA has previously analyzed the potential economic effects of this final rule. As announced in the proposal, the agency has determined that the rule is not a major rule as determined by the Order. The agency has not received any new information or comments that would alter its previous determination.

However, two comments did disagree with FDA's estimate of the economic impact of the regulation. One comment stated that FDA's economic impact estimate was too low. The other comment stated that the cost of revoking the GRAS status of the use of sulfites on fresh mushrooms would exceed $14 million and would adversely affect a substantial number of small businesses.

Both comments also submitted data regarding the use of sulfites on fresh mushrooms. These comments stated that fresh mushrooms are rinsed in water containing sulfiting agents to eliminate any casing soil that might remain after harvest. In addition to providing the consumer with a product that is free of casing soil, this practice also allows producers to sell excessively soiled mushrooms in the fresh rather than the processed market. Recent price comparisons indicate that the price for fresh mushrooms is approximately $.36 per pound more than the price for mushrooms that are to be processed (U.S. Department of Agriculture (USDA) 1984–1985 average price differential for the United States).

FDA has evaluated the information in these two comments and does not agree that the kind of impact estimated in the comments is likely. As discussed in Section III. of this preamble, the agency believes that the vast majority of fresh mushroom producers do not treat their mushrooms with a sulfite wash. Therefore, the loss of sulfiting agents will not result in a substantial diversion of mushrooms from the fresh to the processed market with an attendant decrease in revenue. Further, clean mushrooms that have not been chemically washed are currently marketed. Producers of these preservative-free mushrooms state that certain inexpensive cultivating and harvesting techniques can be used to produce a relatively soil-free mushroom.

Thus, the use of sulfiting agents by fresh mushroom growers is not universal, and an economic dependency on sulfiting agents for use on fresh mushrooms has not been demonstrated by current users. Consequently, FDA has determined that this regulation will not produce a major economic impact on fresh mushroom producers or a significant economic impact on a substantial number of small entities.

The agency's findings of no major economic impact and no significant impact on a substantial number of small entities, and the evidence supporting these findings, are contained in a threshold assessment which may be seen in the Dockets Management Branch (HFA-305), Food and Drug Administration, Rm. 4-62, 5600 Fishers Lane, Rockville, MD 20857.

VI. References

The following references have been placed on display in the Dockets Management Branch and may be seen by interested persons between 9 a.m. and 4 p.m., Monday through Friday.

1. Transcript, Ad Hoc Advisory Committee on Hypersensitivity to Food Constituents, December 12 and 13, 1985, meeting, pp. 359–363.

2. Memorandum from Paula J. Oliver, Director, Investigations Branch, Philadelphia District Office, FDA, to Sulfite Monitor, Center for Food Safety and Applied Nutrition, "Sulfiting Agents in Fresh Mushrooms," December 3, 1985.

List of Subjects in 21 CFR Part 182

Food ingredients, Spices and flavorings.

Therefore, under the Federal Food, Drug, and Cosmetic Act, Part 182 is amended as follows:

PART 182—SUBSTANCES GENERALLY RECOGNIZED AS SAFE

1. The authority citation for 21 CFR Part 182 is revised to read as follows:

Authority: Secs. 201(s), 402, 409, 701, 52 Stat. 1046–1047 as amended, 1055–1056 as amended, 72 Stat. 1784–1788 as amended (21 U.S.C. 321(s), 342, 348, 371); 21 CFR 5.10 and 5.11.

2. In § 182.3616 by revising paragraph (c), to read as follows:

§ 182.3616 Potassium bisulfite.

* * * * *

(c) *Limitations, restrictions, or explanation.* This substance is generally recognized as safe when used in accordance with good manufacturing practice, except that it is not used in meats or in food recognized as source of vitamin B_1, and that it is not used on fruits or vegetables intended to be served raw to consumers or sold raw to consumers or to be presented to consumers as fresh.

3. In § 182.3637 by revising paragraph (c), to read as follows:

§ 182.3637 Potassium metabisulfite.

* * * * *

(c) *Limitations, restrictions, or explanation.* This substance is generally recognized as safe when used in accordance with good manufacturing practice, except that it is not used in meats or in food recognized as source of vitamin B_1, and that it is not used on fruits or vegetables intended to be served raw to consumers or sold raw to consumers or to be presented to consumers as fresh.

4. In § 182.3739 by revising paragraph (c), to read as follows:

§ 182.3739 Sodium bisulfite.

* * * * *

(c) *Limitations, restrictions, or explanation.* This substance is generally recognized as safe when used in accordance with good manufacturing practice, except that it is not used in meats or in food recognized as source of vitamin B_1, and that it is not used on fruits or vegetables intended to be served raw to consumers or sold raw to consumers or to be presented to consumers as fresh.

5. In § 182.3766 by revising paragraph (c), to read as follows:

§ 182.3766 Sodium metabisulfite.

* * * * *

(c) *Limitations, restrictions, or explanation.* This substance is generally recognized as safe when used in accordance with good manufacturing practice, except that it is not used in meats or in food recognized as source of

vitamin B_1, and that it is not used on fruits or vegetables intended to be served raw to consumers or sold raw to consumers or to be presented to consumers as fresh.

6. In § 182.3798 by revising paragraph (c), to read as follows:

§ 182.3798 Sodium sulfite.

* * * * *

(c) *Limitations, restrictions, or explanation.* This substance is generally recognized as safe when used in accordance with good manufacturing practice, except that it is not used in meats or in food recognized as source of vitamin B_1, and that it is not used on fruits or vegetables intended to be served raw to consumers or sold raw to consumers or to be presented to consumers as fresh.

7. In § 182.3862 by revising paragraph (c), to read as follows:

§ 182.3862 Sulfur dioxide.

* * * * *

(c) *Limitations, restrictions, or explanation.* This substance is generally recognized as safe when used in accordance with good manufacturing practice, except that it is not used in meats or in food recognized as source of vitamin B_1, and that it is not used on fruits or vegetables intended to be served raw to consumers or sold raw to consumers or to be presented to consumers as fresh.

Frank E. Young,

Commissioner of Food and Drugs.

Otis R. Bowen,

Secretary of Health and Human Services.

Dated: July 11, 1986.

[FR Doc. 86-15391 Filed 7-8-86; 8:45 am]

BILLING CODE 4160-01-M

Reader Aids

Federal Register
Vol. 51, No. 131
Wednesday, July 9, 1986

INFORMATION AND ASSISTANCE

SUBSCRIPTIONS AND ORDERS

Subscriptions (public)	202-783-3238
Problems with subscriptions	275-3054
Subscriptions (Federal agencies)	523-5240
Single copies, back copies of FR	783-3238
Magnetic tapes of FR, CFR volumes	275-1184
Public laws (Slip laws)	275-3030

PUBLICATIONS AND SERVICES

Daily Federal Register

General information, index, and finding aids	523-5227
Public inspection desk	523-5215
Corrections	523-5237
Document drafting information	523-5237
Legal staff	523-4534
Machine readable documents, specifications	523-3408

Code of Federal Regulations

General information, index, and finding aids	523-5227
Printing schedules and pricing information	523-3419

Laws	523-5230

Presidential Documents

Executive orders and proclamations	523-5230
Public Papers of the President	523-5230
Weekly Compilation of Presidential Documents	523-5230

United States Government Manual	523-5230

Other Services

Library	523-4986
Privacy Act Compilation	523-4534
TDD for the deaf	523-5229

FEDERAL REGISTER PAGES AND DATES, JULY

23719-24132 1
24133-24294 2
24295-24506 3
24507-24640 7
24641-24798 8
24799-25026 9

CFR PARTS AFFECTED DURING JULY

At the end of each month, the Office of the Federal Register publishes separately a List of CFR Sections Affected (LSA), which lists parts and sections affected by documents published since the revision date of each title.

3 CFR

Proclamations:
5507 24295
5508 24297
5509 24507
5510 24509
5511 24641

Executive Orders:
10621 (Amended by EO 12561) 24299
11294 (Revoked by EO 12561) 24299
12561 24299

5 CFR

950 24133
1701 24799
1702 24799
1703 24799
1720 24799

Proposed Rules:
890 23782

7 CFR

2 24806
250 23719
354 24511
908 24643
917 24807
981 ..... 24808, 24809
1901 24301

Proposed Rules:
400 ..... 23782, 24677
810 24532
910 24355
1030 24677
1032 24677
1033 24677
1036 24677
1049 24677
1050 24677
1864 24356
1900 24356
1903 24356
1944 24356
1951 24356
1955 24356
1956 24356
1962 24356
1965 24356

8 CFR

Proposed Rules:
212 24533
214 24533

9 CFR

78 24133
94 23730
113 23731

Proposed Rules:
92 24154

10 CFR

50 24643
300 ..... 24643, 24810

Proposed Rules:
2 24365
40 24697
50 24715
51 24078
55 24715
171 24078

12 CFR

346 24302

13 CFR

302 ..... 24302, 24512
304 24512
305 24512
309 24303
310 24516

14 CFR

39 ..... 23731-23733, 24134, 24648, 24811, 24812
71 ..... 23734, 24104, 24516, 24649, 24813
73 24649
75 23735
97 24650
1204 24652

Proposed Rules:
39 ..... 23786, 23787, 24715, 24716, 24844
43 24845
71 23789
91 ..... 24845, 24851
121 24845
127 24845
135 24845

15 CFR

70 24653
373 24135

Proposed Rules:
376 24533
385 24533

16 CFR

13 ..... 24136, 24653
305 24137
444 24304

Proposed Rules:
307 24375

17 CFR

Proposed Rules:
Ch. II 24155
30 24852

18 CFR

11 24308

13 ... 24308
375 ... 24308

19 CFR

4 ... 24322
24 ... 24323
134 ... 24814
142 ... 23736
Proposed Rules:
19 ... 24535
144 ... 24535
191 ... 24536

20 CFR

655 ... 24138

21 CFR

73 ... 24815
74 ... 24517, 24519
81 ... 24519
82 ... 24517, 24519
101 ... 25012
182 ... 25012
211 ... 24476
310 ... 24476
314 ... 24476
520 ... 24524
522 ... 24141, 24524
558 ... 23736

24 CFR

215 ... 24324
236 ... 24324
812 ... 24324
813 ... 24324
882 ... 24324
886 ... 24324
Proposed Rules:
35 ... 24112
115 ... 24852
200 ... 24112
881 ... 24112
882 ... 24112
886 ... 24112

26 CFR

1 ... 23737
602 ... 23737
Proposed Rules:
1 ... 23790, 24162
3 ... 24162
5f ... 24162
6a ... 24162
25 ... 24162
514 ... 24162

27 CFR

9 ... 24142
Proposed Rules:
24 ... 24719
170 ... 24719
200 ... 24383
231 ... 24719
240 ... 24719

28 CFR

Proposed Rules:
64 ... 24163

29 CFR

Ch. XVII ... 24525
102 ... 23744
1450 ... 24816
1910 ... 24324
2615 ... 24145
Proposed Rules:
2200 ... 24386
2670 ... 24536
2675 ... 24536

30 CFR

906 ... 23750
Proposed Rules:
75 ... 24387
800 ... 23790, 24547
901 ... 24719
914 ... 24387, 24388
917 ... 24390

31 CFR

315 ... 23752
332 ... 23752
352 ... 23752
353 ... 23752

32 CFR

54 ... 23754
155 ... 23757
199 ... 24008
728 ... 23972

33 CFR

100 ... 24528
117 ... 24655
165 ... 24655
Proposed Rules:
117 ... 24720, 24721

34 CFR

30 ... 24095
Proposed Rule:
30 ... 24092
624 ... 24796

36 CFR

8 ... 24655

39 CFR

3001 ... 24529
Proposed Rules:
10 ... 24391

40 CFR

16 ... 24145
52 ... 23758
65 ... 24656
81 ... 24825
86 ... 24325, 24606
141 ... 24328
261 ... 24496
403 ... 23759
405 ... 24974
406 ... 24974
407 ... 24974
408 ... 24974
409 ... 24974
411 ... 24974
412 ... 24974
418 ... 24974
422 ... 24974
424 ... 24974
426 ... 24974
432 ... 24974
799 ... 24657
Proposed Rules:
50 ... 24392
52 ... 24163, 24393, 24853
60 ... 24164, 24170
81 ... 24854, 24855
86 ... 24614
153 ... 24393
166 ... 24393
260 ... 24856
261 ... 24856
262 ... 24856
264 ... 24856
265 ... 24856
268 ... 24856
270 ... 24856
271 ... 24549, 24856
721 ... 24551, 24555

41 CFR

101-40 ... 24329
101-47 ... 23760

42 CFR

405 ... 24484
420 ... 24484
442 ... 24484
447 ... 24484
489 ... 24484
Proposed Rules:
405 ... 23792, 24857
420 ... 24857
455 ... 24857
474 ... 24857

43 CFR

431 ... 23960, 24531

44 CFR

14 ... 24346
Proposed Rules:
67 ... 24396

45 CFR

1600 ... 24826
1611 ... 24151
1631 ... 24826
Proposed Rules:
96 ... 24402

47 CFR

64 ... 24350
73 ... 23761-23764, 24151, 24351, 24352, 24827
Proposed Rules:
2 ... 24409
18 ... 24872
64 ... 24410
73 ... 23795-23798, 24171-24173, 24409-24413, 24872-24877
95 ... 24174

48 CFR

508 ... 24667
525 ... 24667
1822 ... 23765
1852 ... 23765
Proposed Rules:
30 ... 24788, 24971

49 CFR

571 ... 24152
1180 ... 24668
Proposed Rules:
Ch. X ... 24723
192 ... 24174, 24722
391 ... 24722
393 ... 24413
395 ... 24722
571 ... 24176, 24877

50 CFR

17 ... 23765, 23769, 24669, 24672
215 ... 24828
650 ... 24841
658 ... 24675
661 ... 24352, 24353, 24842
672 ... 24353
Proposed Rules:
14 ... 24559
17 ... 24178, 24723, 24727
20 ... 24415
32 ... 24179
246 ... 24559
655 ... 24880

LIST OF PUBLIC LAWS

Note: No public bills which have become law were received by the Office of the Federal Register for inclusion in today's **List of Public Laws.**

Last List July 8, 1986