6-25-87
Vol. 52 No. 122
Pages 23779-23930

federal register

Thursday
June 25, 1987

Briefings on How To Use the Federal Register—
For information on briefings in Chicago, IL, and Boston, MA, see announcement on the inside cover of this issue.

FEDERAL REGISTER Published daily, Monday through Friday, (not published on Saturdays, Sundays, or on official holidays), by the Office of the Federal Register, National Archives and Records Administration, Washington, DC 20408, under the Federal Register Act (49 Stat. 500, as amended; 44 U.S.C. Ch. 15) and the regulations of the Administrative Committee of the Federal Register (1 CFR Ch. I). Distribution is made only by the Superintendent of Documents, U.S. Government Printing Office, Washington, DC 20402.

The **Federal Register** provides a uniform system for making available to the public regulations and legal notices issued by Federal agencies. These include Presidential proclamations and Executive Orders and Federal agency documents having general applicability and legal effect, documents required to be published by act of Congress and other Federal agency documents of public interest. Documents are on file for public inspection in the Office of the Federal Register the day before they are published, unless earlier filing is requested by the issuing agency.

The **Federal Register** will be furnished by mail to subscribers for $340.00 per year, or $170.00 for 6 months, payable in advance. The charge for individual copies is $1.50 for each issue, or $1.50 for each group of pages as actually bound. Remit check or money order, made payable to the Superintendent of Documents, U.S. Government Printing Office, Washington, DC 20402.

There are no restrictions on the republication of material appearing in the **Federal Register.**

Questions and requests for specific information may be directed to the telephone numbers listed under INFORMATION AND ASSISTANCE in the READER AIDS section of this issue.

How To Cite This Publication: Use the volume number and the page number. Example: 52 FR 12345.

THE FEDERAL REGISTER
WHAT IT IS AND HOW TO USE IT

FOR: Any person who uses the Federal Register and Code of Federal Regulations.

WHO: The Office of the Federal Register.

WHAT: Free public briefings (approximately 2 1/2 hours) to present:

1. The regulatory process, with a focus on the Federal Register system and the public's role in the development of regulations.
2. The relationship between the Federal Register and Code of Federal Regulations.
3. The important elements of typical Federal Register documents.
4. An introduction to the finding aids of the FR/CFR system.

WHY: To provide the public with access to information necessary to research Federal agency regulations which directly affect them. There will be no discussion of specific agency regulations.

CHICAGO, IL

WHEN: July 8, at 9 a.m.
WHERE: Room 204A,
Everett McKinley Dirksen Federal Building,
219 S. Dearborn Street,
Chicago, IL.
RESERVATIONS: Call the Chicago Federal Information Center, 312-353-0339.

BOSTON, MA

WHEN: July 15, at 9 a.m.
WHERE: Main Auditorium, Federal Building,
10 Causeway Street,
Boston, MA.
RESERVATIONS: Call the Boston Federal Information Center, 617-565-8129

Contents

Federal Register
Vol. 52, No. 122
Thursday, June 25, 1987

Agency for International Development
NOTICES
Housing guaranty programs:
Honduras, 23901

Agricultural Marketing Service
PROPOSED RULES
Milk marketing orders:
Upper Midwest, 23843
Perishable Agricultural Commodities Act:
License fees, 23842

Agriculture Department
See also Agricultural Marketing Service; Forest Service; Soil Conservation Service
NOTICES
Meetings:
Dairy Policy National Commission, 23876

Antitrust Division
NOTICES
National cooperative research notifications:
Petroleum Environmental Research Forum, 23903, 23904 (2 documents)

Army Department
See also Engineers Corps
NOTICES
Lawyers; professional conduct, 23883
Meetings:
Military/industry mobile homes symposium, 23884
Science Board, 23883, 23884 (2 documents)

Commerce Department
See also International Trade Administration; National Oceanic and Atmospheric Administration
NOTICES
Agency information collection activities under OMB review, 23877

Committee for the Implementation of Textile Agreements
NOTICES
Cotton, wool, and man-made textiles:
Czechoslovakia, 23881
Turkey, 23882
Uruguay, 23883

Defense Department
See also Army Department; Engineers Corps
RULES
Acquisition regulations:
Unallowable costs penalties
Correction, 23835
Undefinitized contract actions
Correction, 23835
Value engineering, 23835

Employment and Training Administration
NOTICES
Trade adjustment assistance program:
Certifying officers, designation, 23904

Employment Standards Administration
See Wage and Hour Division

Energy Department
See Federal Energy Regulatory Commission

Engineers Corps
RULES
Engineering and design; water control mangement; list of projects
Correction, 23816

Environmental Protection Agency
RULES
Air quality implementation plans; approval and promulgation; various States:
New York, 23829
Pesticides; tolerances in foods and animal feeds:
Avermectin B1
Correction, 23916
PROPOSED RULES
Pesticide chemicals in or on raw agricultural commodities; tolerances and exemptions, etc.:
Definitions and interpretations, etc.—
Regional registration tolerances; correction, 23916
Toxic substances:
Testing requirements—
2,6-Di-tert-butylphenol, 23862
NOTICES
Air quality; prevention of significant deterioration (PSD):
Permit determinations, etc.—
Region VI, 23887
Grants, State and local assistance:
Wellhead protection program, 23888
Meetings:
Science Advisory Board, 23889
Pesticides; receipts of State registration; correction, 23916
Toxic and hazardous substances control:
Premanufacture notices; monthly status, 23922, 23926 (2 documents)

Equal Employment Opportunity Commission
RULES
Age discrimination in employment; interpretations and editorial amendments, 23811

Executive Office of the President
See Management and Budget Office; Presidential Documents; Trade Representative, Office of United States

Federal Communications Commission
PROPOSED RULES
Radio broadcasting:
Noncommercial educational FM broadcast stations; technical and operational requirements review, 23873
Radio stations; table of assignments:
Tennessee, 23875
NOTICES
Agency information collection activities under OMB review, 23889

Federal Energy Regulatory Commission
NOTICES
Electric rate and corporate regulation filings:
Detroit Edison Co. et al., 23884
Applications, hearings, determinations, etc.:
Anadarko Petroleum Corp., 23885
Interstate Power Co. et al., 23886
Phillips Gas Pipeline Co., 23886
Transcontinental Gas Pipeline Corp., 23887

Federal Highway Administration
NOTICES
Environmental statements; notice of intent:
Tulsa County, OK, 23912

Federal Home Loan Bank Board
RULES
Federal Savings and Loan Insurance Corporation:
Direct investment by insured institutions in real estate, service corporations, equity securities, etc.
Land loans and nonresidential construction loans, etc., 23787
PROPOSED RULES
Federal Savings and Loan Insurance Corporation:
Regulatory capital—
Insured institutions requirements, 23845

Federal Maritime Commission
NOTICES
Agreements filed, etc., 23889
Investigations, hearings, petitions, etc.:
Bi-State Harbor Carriers Conference of New Jersey Motor Truck Assoc.; payment of inland divisions, 23890

Federal Reserve System
NOTICES
Applications, hearings, determinations, etc.:
Bellbrook Bancorp, Inc.; correction, 23890
Johnson, Alan E., 23890
Mountain Bank System, Inc., 23892
National City Corp., 23890
NewMil Bancorp, Inc., et al., 23891
People's Mutual Holdings, 23891

Fish and Wildlife Service
NOTICES
Marine mammal permit applications, 23899

Food and Drug Administration
RULES
Food additives:
Polymers—
Tert-butyl alcohol in propylene homopolymer and high-propylene copolymers, 23804
NOTICES
Human drugs:
Export applications—
Lecovorin calcium for injection, 23892

Forest Service
NOTICES
Environmental statements; availability, etc.:
Los Padres National Forest, CA, 23876

General Services Administration
RULES
Property management:
Utilization and disposal—
Limited sales by holding agencies, 23830

Health and Human Services Department
See Food and Drug Administration; Health Care Financing Administration

Health Care Financing Administration
RULES
Medicare:
Low income patients; payments for services by large rural hospitals, 23832

Housing and Urban Development Department
NOTICES
Agency information collection activities under OMB review, 23892

Indian Affairs Bureau
RULES
Hunting; Wind River Reservation Game Code, 23805

Interior Department
See Fish and Wildlife Service; Indian Affairs Bureau; Land Management Bureau; Minerals Management Service

International Development Cooperation Agency
See Agency for International Development

International Trade Administration
NOTICES
Antidumping:
Bicycle tires and tubes from Korea, 23877
Steel wire nails from—
China, 23878
Procurement:
International freight forwarding services to exhibits transportation unit; proposal request, 23878

Interstate Commerce Commission
NOTICES
Agency information collection activities under OMB review, 23902
Railroad services abandonment:
CSX Transportation, Inc., 23902

Justice Department
See also Antitrust Division; Juvenile Justice and Delinquency Prevention Office
NOTICES
Pollution control; consent judgments:
American Nickeloid Co., 23902
Gary, IN, 23903
Thermo-National Industries, Inc., 23903

Juvenile Justice and Delinquency Prevention Office
NOTICES
Grants and cooperative agreements:
Private nonprofit missing children's agencies service activities, 23904

Labor Department
See Employment and Training Administration; Mine Safety and Health Administration; Wage and Hour Division

Land Management Bureau
NOTICES
Meetings:
Canon City District Grazing Advisory Board, 23893
Vale District Grazing Advisory Board, 23898
Oil and gas leases:
Colorado, 23893

Realty actions; sales, leases, etc.:
Arizona, 23893–23896
(4 documents)
Idaho, 23896
Resource management plans, etc.:
Yuma District Resource Area, AZ, 23897
Withdrawal and reservation of lands:
Arizona, 23898
Colorado, 23897
New Mexico, 23898

Management and Budget Office
NOTICES
Consulting services use guidelines (Circular A-120), 23918

Mine Safety and Health Administration
NOTICES
Safety standard petitions:
Tug Huff Coal Corp., 23905

Minerals Management Service
RULES
Outer Continental Shelf; oil, gas, and sulphur operations:
Report requirements, 23815
Royalty management:
Electronic funds transfer payments, 23812
NOTICES
Meetings:
Outer Continental Shelf Advisory Board, 23899
Outer Continental Shelf; development operations coordination:
Diamond Shamrock Offshore Partners Limited Partnership, 23900
Kerr-McGee Corp., 23900
Minatome Corp., 23901

National Archives and Records Administration
RULES
National Archives and Presidential Libraries; public use, 23820

National Mediation Board
NOTICES
Meetings; Sunshine Act, 23915

National Oceanic and Atmospheric Administration
RULES
Fishery conservation and management:
Gulf of Mexico and South Atlantic coastal migratory pelagic resources, 23836

National Science Foundation
NOTICES
Meetings:
Biological Facilities Centers Advisory Panel, 23905
Division of Mechanics, Structures, and Materials Engineering Committee, 23905
Polar Programs Advisory Committee, 23906

Nuclear Regulatory Commission
NOTICES
Organization, functions, and authority delegations:
Public document room; service hours, 23906
Applications, hearings, determinations, etc.:
United States Testing Co., Inc., 23906

Office of Management and Budget
See Management and Budget Office

Office of United States Trade Representative
See Trade Representative, Office of United States

Pacific Northwest Electric Power and Conservation Planning Council
NOTICES
Meetings; Sunshine Act, 23915

Postal Rate Commission
NOTICES
Meetings; Sunshine Act, 23915

Postal Service
NOTICES
Meetings; Sunshine Act, 23915

Presidential Documents
EXECUTIVE ORDERS
Commercial information; predisclosure notification procedures (EO 12600), 23781
Committees; establishment, renewals, terminations, etc.:
Sub-Saharan Africa, Coordinating Committee (EO 12599), 23779
ADMINISTRATIVE ORDERS
Hungary; trade agreement renewal (Presidential Determination No. 87-15 of June 23, 1987), 23785

Public Health Service
See Food and Drug Administration

Railroad Retirement Board
NOTICES
Meetings; Sunshine Act, 23915

Securities and Exchange Commission
PROPOSED RULES
Securities:
Multiple trading of options, 23849
Shareholder communications, facilitation, 23855
NOTICES
Agency information collection activities under OMB review, 23909
Self-regulatory organizations; proposed rule changes:
American Stock Exchange, Inc., 23909
New York Stock Exchange, Inc., 23911
Options Clearing Corp., 23911
Applications, hearings, determinations, etc.:
Landmark Bancshares Corp., 23911

Soil Conservation Service
NOTICES
Environmental statements; availability, etc.:
Arroyo Grande Creek, CA, 23876

Textile Agreements Implementation Committee
See Committee for the Implementation of Textile Agreements

Trade Representative, Office of United States
NOTICES
Meetings:
Services Policy Advisory Committee and Trade Negotiations Advisory Committee, 23912

Transportation Department
See Federal Highway Administration

Treasury Department
NOTICES
Agency information collection activities under OMB review, 23912

United States Information Agency
NOTICES
Art objects, importation for exhibition:
Judaica from Vatican Libraries, 23913
Grants; availability, etc.:
Private non-profit organizations in support of international educational and cultural activities, 23913

Veterans Administration
RULES
Federal claims collection; salary offset
Correction, 23823
Medical benefits:
State home facilities, 23824
NOTICES
Meetings:
Educational Allowances Station Committee, 23913

Wage and Hour Division
RULES
Age discrimination in employment; CFR Part removed, 23812

Separate Parts In This Issue

Part II
Office of Management and Budget, 23918

Part III
Environmental Protection Agency, 23922

Part IV
Environmental Protection Agency, 23926

Reader Aids
Additional information, including a list of public laws, telephone numbers, and finding aids, appears in the Reader Aids section at the end of this issue.

CFR PARTS AFFECTED IN THIS ISSUE

A cumulative list of the parts affected this month can be found in the Reader Aids section at the end of this issue.

3 CFR

Executive Orders:

12599.....23779
12600.....23781

Administrative Orders:

Presidential Determinations:

No. 87-15 of June 23, 1987.....23785

7 CFR

Proposed Rules:

46.....23842
1068.....23843

12 CFR

563.....23787

Proposed Rules:

563.....23845

17 CFR

Proposed Rules:

240 (2 documents).....23849, 23855

21 CFR

177.....23804
193.....23916
561.....23916

25 CFR

244.....23805

29 CFR

860.....23812
1625.....23811

30 CFR

218.....23812
250.....23815

33 CFR

222.....23816

36 CFR

1253.....23820
1280.....23820

38 CFR

1.....23823
17.....23824

40 CFR

52.....23829

Proposed Rules:

180.....23916
799.....23862

41 CFR

101-45.....23830

42 CFR

412.....23832

47 CFR

Proposed Rules:

73 (2 documents).....23873, 23875

48 CFR

217.....23835
248.....23835
252.....23835

50 CFR

604.....23836
642.....23836

Federal Register
Vol. 52, No. 122
Thursday, June 25, 1987

Presidential Documents

Title 3—

The President

Executive Order 12599 of June 23, 1987

Coordination of Economic Policies for Sub-Saharan Africa

By the authority vested in me as President by the Constitution and statutes of the United States of America, including the Foreign Assistance Act of 1961, as amended, and in order to establish procedures for development of a common long-term goal for all United States economic programs and policies in Sub-Saharan Africa, it is hereby ordered as follows:

Section 1. *Establishment of the Coordinating Committee for Sub-Saharan Africa.* (a) There is hereby established a Coordinating Committee for Sub-Saharan Africa ("the Committee").

(b) The Committee shall consist of the Administrator of the Agency for International Development, who shall be Chairman; the Assistant Secretary of the Treasury for International Affairs, who shall be Co-Chairman; representatives designated by the Secretaries of State, Defense, Agriculture, and Commerce; and representatives of the Office of Management and Budget, the Central Intelligence Agency, the United States Information Agency, the Peace Corps, the Overseas Private Investment Corporation, the United States Trade Representative, the African Development Foundation, the Assistant to the President for National Security Affairs, and the Assistant to the President for Policy Development.

(c) Whenever matters being considered by the Committee may be of interest to Federal agencies not represented on the Committee, the Chairman may invite the head of such agencies to designate representatives to participate in meetings and deliberations of the Committee.

(d) The Committee shall operate under the policy direction of the Secretaries of State and the Treasury.

(e) All Executive departments and agencies shall keep the Committee informed in necessary detail as to the policies, programs, and activities relating to the functions of the Committee described in section 2.

(f) Nothing herein shall be deemed to derogate from the responsibilities of the head of any agency in exercising the responsibilities vested in that person by law.

Sec. 2. *Functions of the Committee.* (a) The Committee shall operate in a manner best deemed appropriate by its Chairman in order to ensure the following:

(1) that all United States economic programs and policies for Sub-Saharan Africa are consistent with the goal of ending hunger in the region through economic growth, policy reform, and private sector development;

(2) United States economic programs and policies for each country of Sub-Saharan Africa are tailored to the specific needs of that country, consistent with the goal presented in subsection (a) (1) of this section;

(3) United States economic programs and policies for Sub-Saharan Africa are fully coordinated within the United States Government prior to implementation with other donors and potential recipients; and,

(4) the overall level of aid the United States offers a country of Sub-Saharan Africa is related to continued performance of that country toward the goal presented in subsection (a)(1) of this section or willingness to undertake economic reform.

(b) The Committee shall support the Secretaries of State and the Treasury in preparing the annual report to the President required in section 3 of this Order.

(c) The Committee shall coordinate the preparation annually of a unified budget justification for transmittal to the Congress. This justification shall encompass all United States economic activities, strategies, and policies for Sub-Saharan Africa. Nothing in this subsection shall be deemed to affect the statutory authorities of the Director of the Office of Management and Budget.

(d) The Committee shall encourage and coordinate the alignment of United States food assistance programs in accordance with the goals presented in subsection 2(a) of this Order.

(e) The Committee shall encourage and coordinate efforts to mobilize expanded humanitarian and business involvement in Africa, both United States and international, through an outreach effort with appropriate Federal agencies.

(f) The Committee shall encourage and coordinate efforts of Federal agencies to expand United States business involvement in Sub-Saharan Africa by targeting trade and investment missions, prefeasibility and feasibility studies, sector and regional analyses, access to credit, and information on trade and investment opportunities in countries undertaking economic reform.

Sec. 3. *Annual Report to the President.* (a) The Secretary of State and the Secretary of the Treasury shall make a joint report to the President annually on Sub-Saharan Africa.

(b) The annual report shall discuss the economic condition of Sub-Saharan Africa and highlight progress being made in the region toward achieving the goal presented in section 2(a)(1). The annual report shall also affirm that all United States economic programs and policies conform with and support the goal of ending hunger in Sub-Saharan Africa through economic growth and private enterprise development.

Ronald Reagan

THE WHITE HOUSE,
June 23, 1987.

[FR Doc. 87-14601
Filed 6-23-87; 4:37 pm]
Billing code 3195-01-M

Presidential Documents

Executive Order 12600 of June 23, 1987

Predisclosure Notification Procedures for Confidential Commercial Information

By the authority vested in me as President by the Constitution and statutes of the United States of America, and in order to provide predisclosure notification procedures under the Freedom of Information Act concerning confidential commercial information, and to make existing agency notification provisions more uniform, it is hereby ordered as follows:

Section 1. The head of each Executive department and agency subject to the Freedom of Information Act shall, to the extent permitted by law, establish procedures to notify submitters of records containing confidential commercial information as described in section 3 of this Order, when those records are requested under the Freedom of Information Act (FOIA), 5 U.S.C. 552, as amended, if after reviewing the request, the responsive records, and any appeal by the requester, the department or agency determines that it may be required to disclose the records. Such notice requires that an agency use good-faith efforts to advise submitters of confidential commercial information of the procedures established under this Order. Further, where notification of a voluminous number of submitters is required, such notification may be accomplished by posting or publishing the notice in a place reasonably calculated to accomplish notification.

Sec. 2. For purposes of this Order, the following definitions apply:

(a) "Confidential commercial information" means records provided to the government by a submitter that arguably contain material exempt from release under Exemption 4 of the Freedom of Information Act, 5 U.S.C. 552(b)(4), because disclosure could reasonably be expected to cause substantial competitive harm.

(b) "Submitter" means any person or entity who provides confidential commercial information to the government. The term "submitter" includes, but is not limited to, corporations, state governments, and foreign governments.

Sec. 3. (a) For confidential commercial information submitted prior to January 1, 1988, the head of each Executive department or agency shall, to the extent permitted by law, provide a submitter with notice pursuant to section 1 whenever:

(i) the records are less than 10 years old and the information has been designated by the submitter as confidential commercial information; or

(ii) the department or agency has reason to believe that disclosure of the information could reasonably be expected to cause substantial competitive harm.

(b) For confidential commercial information submitted on or after January 1, 1988, the head of each Executive department or agency shall, to the extent permitted by law, establish procedures to permit submitters of confidential commercial information to designate, at the time the information is submitted to the Federal government or a reasonable time thereafter, any information the disclosure of which the submitter claims could reasonably be expected to cause substantial competitive harm. Such agency procedures may provide for the expiration, after a specified period of time or changes in circumstances, of designations of competitive harm made by submitters. Additionally, such

procedures may permit the agency to designate specific classes of information that will be treated by the agency as if the information had been so designated by the submitter. The head of each Executive department or agency shall, to the extent permitted by law, provide the submitter notice in accordance with section 1 of this Order whenever the department or agency determines that it may be required to disclose records:

(i) designated pursuant to this subsection; or

(ii) the disclosure of which the department or agency has reason to believe could reasonably be expected to cause substantial competitive harm.

Sec. 4. When notification is made pursuant to section 1, each agency's procedures shall, to the extent permitted by law, afford the submitter a reasonable period of time in which the submitter or its designee may object to the disclosure of any specified portion of the information and to state all grounds upon which disclosure is opposed.

Sec. 5. Each agency shall give careful consideration to all such specified grounds for nondisclosure prior to making an administrative determination of the issue. In all instances when the agency determines to disclose the requested records, its procedures shall provide that the agency give the submitter a written statement briefly explaining why the submitter's objections are not sustained. Such statement shall, to the extent permitted by law, be provided a reasonable number of days prior to a specified disclosure date.

Sec. 6. Whenever a FOIA requester brings suit seeking to compel disclosure of confidential commercial information, each agency's procedures shall require that the submitter be promptly notified.

Sec. 7. The designation and notification procedures required by this Order shall be established by regulations, after notice and public comment. If similar procedures or regulations already exist, they should be reviewed for conformity and revised where necessary. Existing procedures or regulations need not be modified if they are in compliance with this Order.

Sec. 8. The notice requirements of this Order need not be followed if:

(a) The agency determines that the information should not be disclosed;

(b) The information has been published or has been officially made available to the public;

(c) Disclosure of the information is required by law (other than 5 U.S.C. 552);

(d) The disclosure is required by an agency rule that (1) was adopted pursuant to notice and public comment, (2) specifies narrow classes of records submitted to the agency that are to be released under the Freedom of Information Act, and (3) provides in exceptional circumstances for notice when the submitter provides written justification, at the time the information is submitted or a reasonable time thereafter, that disclosure of the information could reasonably be expected to cause substantial competitive harm;

(e) The information requested is not designated by the submitter as exempt from disclosure in accordance with agency regulations promulgated pursuant to section 7, when the submitter had an opportunity to do so at the time of submission of the information or a reasonable time thereafter, unless the agency has substantial reason to believe that disclosure of the information would result in competitive harm; or

(f) The designation made by the submitter in accordance with agency regulations promulgated pursuant to section 7 appears obviously frivolous; except that, in such case, the agency must provide the submitter with written notice of any final administrative disclosure determination within a reasonable number of days prior to the specified disclosure date.

Sec. 9. Whenever an agency notifies a submitter that it may be required to disclose information pursuant to section 1 of this Order, the agency shall also notify the requester that notice and an opportunity to comment are being

provided the submitter. Whenever an agency notifies a submitter of a final decision pursuant to section 5 of this Order, the agency shall also notify the requester.

Sec. 10. This Order is intended only to improve the internal management of the Federal government, and is not intended to create any right or benefit, substantive or procedural, enforceable at law by a party against the United States, its agencies, its officers, or any person.

Ronald Reagan

THE WHITE HOUSE,
June 23, 1987.

[FR Doc. 87-14602
Filed 6-23-87; 4:38 pm]
Billing code 3195-01-M

Presidential Documents

Presidential Determination No. 87-15 of June 23, 1987

Renewal of the Trade Agreement with Hungary

Memorandum for the United States Trade Representative

Pursuant to my authority under subsection 405(b)(1) of the Trade Act of 1974 (19 U.S.C. 2435(b)(1)), I find that a satisfactory balance of concessions in trade and services has been maintained during the life of the Agreement on Trade Relations between the United States of America and the Hungarian People's Republic. I further determine that actual or foreseeable reductions in United States tariffs and non-tariff trade barriers resulting from multilateral negotiations are satisfactorily reciprocated by the Hungarian People's Republic.

These findings and determinations shall be published in the **Federal Register.**

Ronald Reagan

THE WHITE HOUSE,
Washington, June 23, 1987.

[FR Doc. 87-14603
Filed 6-23-87; 4:39 pm]
Billing code 3195-01-M

Rules and Regulations

Federal Register
Vol. 52, No. 122
Thursday, June 25, 1987

This section of the FEDERAL REGISTER contains regulatory documents having general applicability and legal effect, most of which are keyed to and codified in the Code of Federal Regulations, which is published under 50 titles pursuant to 44 U.S.C. 1510.
The Code of Federal Regulations is sold by the Superintendent of Documents. Prices of new books are listed in the first FEDERAL REGISTER issue of each week.

FEDERAL HOME LOAN BANK BOARD

12 CFR Part 563

[No. 87-660-A]

Regulation of Equity Risk Investments by Insured Institutions; Direct Investments, Certain Land Loans and Certain Nonresidential Construction Loans

Dated: June 17, 1987 (previously adopted as Board Res. No. 87-660, on June 10, 1987).

AGENCY: Federal Home Loan Bank Board.

ACTION: Final rule.

SUMMARY: The Federal Home Loan Bank Board ("Board"), as the operating head of the Federal Savings and Loan Insurance Corporation ("FSLIC" or "Corporation"), is amending its regulation concerning investment in equity securities, real estate, service corporations, and operating subsidiaries ("direct investment") by institutions the accounts of which are insured by the FSLIC ("insured institutions" or "institutions").

This amendment expands the scope of the current direct investment regulation to include land loans and nonresidential construction loans with loan-to-value ratios greater than 80 percent. This rule also amends the diversification requirement for investment in a single real estate project applicable under the direct investment rule. As adopted today, the amendment provides that no institution may invest, without prior supervisory approval, in any one real estate project an amount greater than its applicable aggregate loans-to-one borrower limitation as set forth in 12 CFR 563.9-3 (1986). Finally, the proposal amends the Board's regulatory capital regulation, 51 FR 33565 (Sept. 22, 1986) (to be codified at 12 CFR 563.13), to require incremental capital of up to 10 percent for all equity risk investments including, in addition to direct investments, land loans and nonresidential construction loans with loan-to-value ratios greater than 80 percent.

EFFECTIVE DATE: July 27, 1987.

FOR FURTHER INFORMATION CONTACT: Christina M. Gattuso, Attorney, (202) 377-6649, Andrew Gilbert, Attorney, (202) 377-6441, Regulations and Legislation Division, Office of General Counsel; Carol Wambeke, Financial Economist, (202) 377-6758, Joseph A. McKenzie, Director, Policy Analysis Division, (202) 377-6763, Office of Policy and Economic Research, Federal Home Loan Bank Board, 1700 G Street, NW., Washington, DC 20552; or Edward J. Taubert, Associate Director—Policy, (202) 778-2511, Office of Regulatory Policy, Oversight and Supervision, Federal Home Loan Bank System, 900 19th St., NW., Washington, DC 20006.

SUPPLEMENTARY INFORMATION: On January 31, 1985, the Board adopted a regulation governing direct investments by insured institutions. Board Res. No. 85-75-A, 50 FR 6912 (Feb. 19, 1985) (codified at 12 CFR 563.9-8). The regulation created a process of supervisory review and approval by the Board's Principal Supervisory Agents ("PSAs") of certain types of direct investment and of aggregate direct investment above certain threshold amounts. The regulation included qualitative criteria for investment by institutions in equity securities, as well as diversification requirements applicable to investment in any one issuer of securities or in any one real estate project. The direct investment regulation was designed to allow institutions the flexibility to exercise their investment powers, as independently authorized by applicable law, in a manner that would expose neither the institutions themselves nor the FSLIC insurance fund to an unacceptable level of risk. At the same time, the Board sought to ensure that these institutions continued to fulfill their obligations to provide economical home financing. By its own terms, the direct investment rule was to expire on January 1, 1987.

On September 11, 1986, the Board proposed to amend the direct investment rule to defer its expiration from January 1, 1987 to January 1, 1989 ("September proposal"). The comment period for the September proposal ended on October 17, 1986.

On December 18, 1986, the Board adopted an interim final rule to defer the expiration date of the direct investment rule to March 15, 1987, and voted to reopen the comment period on the September proposal through February 6, 1987. Board Res. No. 86-1260, 51 FR 47061 (Dec. 30, 1986). In response to requests by commenters, the Board also voted to hold a two-day public hearing in order to receive oral comments on the September proposal. Board Res. No. 86-1291, 52 FR 80 (Jan. 2, 1987). On February 2, 1987, the Board extended the comment period from February 6, 1987 through February 13, 1987. Board Res. No. 87-114, 52 FR 3669 (Feb. 5, 1987).

On February 27, 1987, the Board adopted a final revised direct investment regulation; it became effective on April 16, 1987. The rule does not prohibit direct investment for insured institutions. Instead, it establishes a system under which an institution may apply to its PSA for approval to exceed the threshold levels established in the amended rule. An institution's direct investment threshold depends on whether it meets its regulatory capital requirement and on its amount of tangible capital. Board Res. No. 87-215, 52 FR 8188 (Mar. 16, 1987). Under this amended rule insured institutions meeting their minimum regulatory capital requirements and having tangible capital equal to or greater than 6 percent of total liabilities may invest up to three times tangible capital without prior PSA approval. Insured institutions meeting their minimum regulatory capital requirements and having tangible capital less than 6 percent of total liabilities may invest the greater of 3 percent of assets or two and one-half times tangible capital without prior PSA approval. Institutions that fail to meet their minimum capital requirements may make direct investments only with prior supervisory review and approval. The final rule also made technical modifications to the waiver provisions, which set standards and procedures for institutions seeking PSA approval to make direct investments in excess of their threshold amounts, and required insured institutions to provide notice for aggregate direct investments in excess of 20 percent of assets. By its own terms, the final revised regulation will expire

on April 16, 1989, unless further action is taken by the Board.

A. Description of the Proposed Rule

On February 27, 1987, the Board also proposed to expand the scope of the final revised direct investment regulation to include certain land loans and nonresidential construction loans. The proposal would have extended the safeguards of the final revised rule to such loans if their loan-to-value ratios were greater than 80 percent or their loan-to-cost ratios were greater than 100 percent. The Board also proposed to substitute the definitional term "equity risk investment" for "direct investment" in order to describe more precisely the characteristics of assets that the Board has found to be problematic for insured institutions and the FSLIC. Accordingly, the proposal sought to amend Chapter V of the Board's regulations to clarify that existing references to "direct investment" should be changed to mean "equity risk investment."

The Board also proposed to amend its regulatory capital regulation, 12 CFR 563.13, to require up to a 10 percent incremental capital requirement for all equity risk investments, including direct investments and certain high-ratio land loans and nonresidential construction loans.

Finally, the Board proposed to amend the diversification requirement applicable to investments in real estate to require prior approval by the PSA before an institution could invest in any one real estate project an amount equal to the lesser of 25 percent of its regulatory capital or the permissible amount specified for its aggregate loans-to-one borrower, set forth in 12 CFR 563.9–3 (1986).

B. Today's Board Action

For the reasons discussed more fully below, the Board has determined to adopt its proposed rule of February 27, 1987, with certain modifications. See Board Res. No. 87–215–A, 52 FR 8207 (Mar. 16, 1987). The Board today is taking the following action:

1. It is expanding the scope of the direct investment rule to encompass land loans and nonresidential construction loans with loan-to-value ratios greater than 80 percent. This is accomplished by amending the definition of "investment in real estate" to include such high-ratio loans.

2. It is limiting an insured institution's investment, without prior supervisory approval, in any one real estate project to an amount not greater than its applicable aggregate loans-to-one borrower limitation as set forth in 12 CFR 563.9–3 (1986). This portfolio diversification requirement applies to direct investments as well as high-ratio land loans and nonresidential construction loans.

3. It is amending its regulatory capital regulation, 51 FR 33565 (Sept. 22, 1986) (to be codified at 12 CFR 563.13), to require incremental capital of up to 10 percent for all equity risk investments, including, in addition to direct investments, high-ratio land loans and nonresidential construction loans.

The Board finds that it is necessary to take this action because these high-ratio loans pose greater risks than loans that traditionally comprise the bulk of insured institutions' portfolios. Through its supervisory experience the Board has learned first-hand that high-ratio loans are riskier investments for thrifts. This experience is reinforced by numerous studies, prepared by Board staff and by others, that demonstrate the increased risks associated with high-ratio loans. These studies, which are discussed in detail below are sophisticated and logical, statistical analyses. Indeed, as fully discussed below, the Board has found that high-ratio loans entail risks that are fundamentally similar to equity risks. In short, after thoroughly considering the question, the Board finds that the high-ratio loans covered by this regulation pose increased risks to insured institutions and to the FSLIC insurance fund.

The Board has a statutory responsibility to protect the FSLIC insurance fund from undue risk. This is a particularly heavy burden today because the fund is laboring under the severest pressures in its history. In the interest of protecting the fund in this economic environment, and at the same time promoting economical home financing, the Board finds it necessary to place limited restraints on institutions' high-ratio loan activity. In doing so, the Board has sought to impose regulatory discipline on the thrift industry in a modest and prudent fashion. The Board has, therefore, chosen not to bar institutions absolutely from making high-ratio loans, but instead, as in the case of direct investments, to require institutions to obtain prior supervisory approval when such transactions exceed a certain threshold.

C. Discussion of Comments

The Board received 41 comments in response to the proposal. The majority of comments (28) were submitted by insured institutions. Of the remainder, 6 were submitted by industry trade associations, 4 by law firms representing insured institutions, 2 by economic consultants, and one by a member of Congress.

Two commenters expressed support for the proposal while 39 commenters opposed the proposal. Both supporters and opponents suggested various substantive and technical modifications. After carefully considering the issues raised by the commenters, which are more fully discussed below, the Board has determined to adopt the proposal, with certain modifications and clarifications, as a final regulation.

1. Procedural Issues

Several commenters strongly urged the Board to provide a lengthier comment period, such as an additional sixty days. Two commenters suggested that there was insufficient opportunity for full and fair participation under the Administrative Procedure Act, 5 U.S.C. 551 *et seq.* ("APA"). Several commenters also urged the Board to hold a public hearing on the proposal before issuing a final rule. The commenters asserted that the changes proposed were quite sweeping, presenting, in some respects, issues of first impression because much of the industry is still unaware that not only state-chartered institutions but Federal associations as well would be significantly affected by the proposed amendments. They argued that more time would permit the industry and the Board to marshal resources to study the numerous factual and policy issues presented by the proposal.

The comment period following publication of the proposal lasted 30 days, from March 16, 1987 until April 16, 1987. This comment period complies with the APA, the Board's own policies and rules, and is otherwise adequate for the following reasons. First, the APA does not prescribe any particular time period for public comment on proposals. The Board's policies and rules require a comment period of not less than 15 days. [*See* Board Res. No. 80–584, 45 FR 63135 (Sept. 23, 1980);] 12 CFR 508.13. Here, a comment period longer than 30 days was not necessary because many of the issues raised by the equity risk investment proposal have been before the public for some time and have been the subject of exhaustive public comment and debate. As noted above, the comment period on the September proposal extended from September 17, 1986, until February 13, 1987. The Board received and considered a total of 155 written comments in response to the September proposal. Moreover, the Board held a two-day public hearing on the September proposal at which it heard oral testimony from 31 industry representatives. The equity risk

investment proposal is itself a direct outgrowth of the Board's consideration of the September proposal in that it sought to expand the scope of the final rule.[1] As is discussed more fully below, many of the issues raised by the equity risk proposal are identical with those the Board considered in promulgating its final direct investment rule in February. That record is necessarily relevant to the amendments to direct investment and, in fact, supports the Board's action today.[2]

In issuing today's rule, the Board is not relying exclusively on the record developed in connection with the February final rule. Recognizing that expansion of the direct investment rule raised some new issues, the Board reviewed its prior studies and supervisory experience and sought comment on the equity risk investment proposal. Because these new issues are a logical outgrowth of issues that both the Board and the public have already considered extensively, however, a 30-day comment period on this proposal was adequate.

The Board also is of the view that a shorter comment period served the public interest by permitting expeditious adoption of a final rule. With the adoption of today's final rule, insured institutions know with certainty what investments and loans are affected by the rule and can therefore better plan their investment and lending strategies.

2. Expanding the Scope of the Direct Investment Rule to Include High-Ratio Land Loans and Nonresidential Construction Loans

The majority of commenters opposed expanding the scope of the direct investment regulation to include high-ratio land loans and nonresidential construction loans. Many of the commenters contended that, on any given property, high-ratio land loans and nonresidential construction loans are less risky than true equity investments because the borrower shares the risk with the lender. The commenters asserted that the proposal ignores the general contractual obligation of the borrower to repay the loan. An insured institution may look to the earning capacity of the borrower and the borrower's assets, in addition to the collateral for the loan, in order to obtain repayment. Further, they argued that the proposal ignores factors such as guarantees of repayment and the ability of experienced developers to create value in projects.

Several commenters asserted that placing limitations on land loans and nonresidential construction loans constitutes an intrusion on traditional investment authority of insured institutions and that such loans are within the traditional underwriting expertise of thrifts. Further, these commenters argued that institutions have engaged in these lending activities for years and that treatment of such loans as direct investments is unwarranted.

Several commenters supported expanding the scope of the direct investment regulation to include high-ratio land loans and nonresidential construction loans. These commenters contended that the inclusion of such loans within the scope of the direct investment rule is justifiable given the uncertainty of the success of such loans, the ample evidence of abuse, and the resulting cost to the FSLIC from practices associated with these loans.

For three reasons, each more fully described in succeeding paragraphs, the Board agrees with the minority of commenters who supported expanding the scope of the direct investment rule to include high-ratio land loans and nonresidential construction loans. First, these types of loan exhibit characteristics that make them inherently more risky than assets that traditionally comprise the majority of assets in thrifts' portfolios, such as one-to-four family residential mortgages. Second, the Board's supervisory experience demonstrates that these types of loans have proved more risky because they repeatedly appear as real estate owned, loans in default, or as severely troubled loans in the portfolios of institutions that the FSLIC has closed or placed on its list of significant supervisory cases. Finally, economic studies confirm the conclusions compelled both by an evaluation of the salient features of the loans themselves and the actual experience of the FSLIC with such loans. Accordingly, the Board finds that high-ratio land loans and nonresidential construction loans entail risks that are fundamentally similar to equity risk and concludes that these loans should be treated in the same manner as direct investments.

Land loans and nonresidential construction loans exhibit several characteristics that enhance their credit risk. With respect to land loans, the land providing collateral for such loans generally generates no income or cash flow and has substantial carrying costs in the form of debt service and property tax. Because of the absence of any cash flow associated with such loans, they pose a high degree of credit risk. Further, land, as a commodity, is subject to very wide fluctuations in value depending on any number of factors, including trends in the local economy.

Nonresidential construction loans share the same types of risks as land loans. During the period of time when the construction loan is outstanding, the security generally consists of the land with a partially constructed building on it. By itself, this security may be worth less than the vacant property and certainly not as much as the completed project. In the event of default, the institution's ability to obtain full realization of the security may be severely impaired. In this situation, the institution may be faced with the necessity of completing the project and bearing the cost of completion which, after default, is likely to be higher than originally anticipated.

Additionally, the repayment of a nonresidential construction loan may be tied to the marketing of the finished product. The Board's supervisory experience has demonstrated that the collateral on nonresidential construction loans is relatively illiquid; numerous FSLIC cases prove that it may take a long time to sell a shopping center or a warehouse, particularly if it is only partially complete. Consequently, a highly leveraged owner with little or no equity in the project has an incentive to default if property prices decline, vacancy rates exceed expectations, or cash flow projections fall short. If the institution is forced to foreclose or take a deed in lieu of foreclosure, the exposure to losses is significant because of the lack of borrower equity and the completion costs and carrying costs incurred over the typically long period of time necessary to sell the underlying nonstandard collateral.

The Board considers one additional factor to be highly significant in defining the loans and investments to be covered by this final rule, *i.e.*, the distribution of the risk between borrower and lender. Clearly, when the borrower's equity is small relative to the size of the loan, or when the borrower has no equity at all in the contemplated project, the borrower's incentive to complete a project that has become financially

[1] *See* 52 FR at 8194–8195.

[2] The Board hereby adopts and incorporates herein, its prior findings (and the studies cited in support thereof) relating acquisition, development, and construction loans to increased risk as those findings are set forth in the final revised direct investment rule, the equity risk investment proposal, and the proposed and final rules setting regulatory capital requirements for insured institutions. Board Res. No. 87–215, 52 FR 8188, 8190–8195 (March 16, 1987); Board Res. No. 87–215–A, 52 FR 8207, 8208–8210 (March 16, 1987); Board Res. No. 86–426, 51 FR 16550, 16557–16560 (May 5, 1986); Board Res. No. 86–857, 51 FR 33565, 33573–33574 (September 22, 1986).

unrewarding and to avoid defaulting on its obligation diminishes. In the Board's experience, diminished incentive to the borrower substantially increases the risk to the lender, who may, as described above, be required to complete the project, incurring in the process the costs associated with completion, or sell an uncompleted project at a "distress" price.

The risk and uncertainties associated with these types of loans are exacerbated by the fact that the actual life of these loans may be longer than originally anticipated by the institution. It has been the Board's experience that the evolving practice in nonresidential construction lending is not to insist on a firm take-out from another lender to provide the permanent financing. Instead, the lender may be forced to provide interim financing by committing to extend a "mini-perm" loan, which is an intermediate term balloon note, until long-term financing can be arranged. This can effectively convert a three-year loan into a six or seven year loan. This practice exposes a lender to substantial credit risk associated with extending a loan beyond the originally contemplated term, to market risk arising due to the extended period between conception and completion of such projects, and the possibility that the project may be sold or leased for less than the projected price, and to interest-rate risk where the lender is forced to extend the mini-perm at a fixed or concessionary interest rate.

Other factors also contribute to the risk posed by high-ratio land loans and nonresidential construction loans. These assets are secured by nonstandard and nonfinished products, and the Board's supervisory experience demonstrates that it is inherently more difficult to obtain an accurate appraisal of the value of the anticipated final product. Lack of an accurate appraisal leads to significant uncertainty regarding the value of the collateral. As a result, often these assets are subject to greater uncertainty in their returns.[3] *See* discussion *infra* at 22–24. Moreover, in many instances, institutions book the loan based on faulty appraisals and losses are hidden because the loans are kept current by loans-in-process accounts funded by the institution.

This form of "self-funding" allows institutions to report dramatic profitability from large initial fees and high interest rates credited from an interest reserve when the underlying project is no longer viable and when a borrower with little equity has no incentive to resolve any problems associated with the project and carry it through to completion.

The FSLIC has been appointed conservator or receiver for numerous institutions that reported profits, due to large self-funded fees, just before they in fact became hopelessly insolvent. In many cases, the FSLIC found that these institutions were carrying as assets land loans and construction loans that were worth only a fraction of their book value.

Case studies prepared by the Office of Regulatory Policy, Oversight and Supervision of the Federal Home Loan Bank System ("ORPOS") contain evidence from supervisory case files demonstrating that high-ratio land loans and nonresidential construction loans carry extreme risk for both insured institutions and the FSLIC.[4] For example, one institution had, as of December 4, 1985, assets of $152.8 million and a negative net worth of $91 million. The deteriorated financial condition of the institution was due to substantial direct investments and speculative commercial real estate loans in projects where the borrowers had little or no equity; closing costs, loan fees and interest were prepaid from loan proceeds or from additional loans. The estimated losses to the FSLIC on approximately $44.4 million in aggregate commercial real estate loans held by this institution is $19.4 million.

In addition to examples, such as this one, from the files of the ORPOS, the Board's Office of General Counsel has also collected information demonstrating the severe problems insured institutions have had with the high-ratio loans covered by this regulation. For example, an institution located in a rural town with a population of 9500 embarked upon a program of massive asset growth in 1983. The most significant growth was in loan participations and originations in large acquisition, development and construction ("ADC") projects outside of the institution's geographic area. The assets of the institution increased from $51.7 million at the end of 1982 to $451.9 million at the end of September, 1985. In 1983 and 1984, the institution invested in a total of 55 large construction loans aggregating approximately $176 million when fully funded. This institution was placed into receivership in December, 1985. The projected loss to the FSLIC fund from the failure of this institution is $97 million, of which $76 million is attributable to ADC loans.

In one of these construction loans, the institution was the lead lender on a $20 million "pre-construction" loan that was 80 percent disbursed at closing and subsequently was 100 percent funded. This loan, in which the institution's interest was $10 million, was made to acquire land and dig a 5-story hole in the ground. At the time the loan was originated, the institution intended to become the lead lender on an additional $160 million loan for the construction of a 21-story indoor country club, for which the 5-story hole would become a parking garage. The follow-up loan was never made, and the pre-construction loan went into default. The City of Dallas is now in the process of filling in the hole and plans to file a lien on the property in the amount of $1 million, the cost of filling in the hole. The projected loss on the institution's $10 million participation on this loan is approximately $8 million.

Another institution, with $1.5 billion in assets, was placed into receivership in 1985. The institution had many commercial construction loans with low borrower equity in its portfolio. Three of these loans highlight the high risks and potential losses involved in such high-ratio loans. One loan for $10.5 million was for the construction of a mixed use commercial center in California where the borrower's equity in the project was 11.5 percent. The projected loss on this loan is $6 million. The second loan of $10 million for lot development with borrower equity of 10 percent has resulted in a projected loss of $7.35 million. The third loan in the amount of $8.3 million, which was for the construction of a mixed use office building, had borrower equity of less than 20 percent, and has a projected loss of $4.8 million.

In addition to these illustrative cases, the Board's supervisory records contain numerous other examples of the losses associated with these types of high-ratio loans. Additionally, the studies performed by its Office of Policy and Economic Research ("OPER") and cited in the preamble to the proposal,[5] as well

[3] The Board is mindful that appraisals may be subject to fraud and abuse by insured institutions. In fact, the Board's supervisory experience is replete with instances demonstrating that some institutions obtain grossly inflated appraisals for acquisition, development and construction projects. The enhanced risk that supports the Board's action today stems not only from the ever-present risk of fraud, but also from the natural uncertainty inherent in the appraisal of unconstructed or unfinished products.

[4] *See* Memorandum from Francis M. Passarelli to Robert J. Sahadi (February 5, 1987) (hereinafter "Pasarelli-Sahadi Memo").

[5] *See* Barth, Brumbaugh & Sauerhaft, *Failure Costs of Government-Related Financial Firms: the Case of Thrift Institutions* (June 1986) (hereinafter "Barth (86) Study"); Memorandum for R. Sahadi from F. Thompson, G. Wang, and D. Bisenius Re: Results from Our Research on the Effect of Direct Investments on the FSLIC's Cost of Resolving Failed

Continued

as those cited in the preamble to the proposed regulatory capital regulation, demonstrate that these loans are inherently risky to both institutions and the FSLIC. *See* 52 FR 8207, 8208–8209 (March 16, 1987); 51 FR 33565, 33573–33574 (Sept. 22, 1986). The Board hereby incorporates the discussion that appears in those documents.

Specifically, in the Barth (86) Study, the OPER examined 324 insured institutions that failed during the period from December 1981 through October 1985. The results, which are significant at the 95 percent confidence level, indicate that acquisition and development loans and direct investments made by failed institutions are significantly related to the FSLIC's costs. Another study, the Thompson (87) Study, found that both direct investments and acquisition and development of land loans may be significantly associated with FSLIC losses. Using the most comprehensive data available, the Thompson (87) Study ran several multivariate statistical models that indicate that ADC loans in failed institutions increase FSLIC losses by approximately 63 to 83 cents on the dollar. Finally, the Brown-McKenzie (87) Study demonstrates that for all institutions, nonresidential mortgages, ADC loans, service corporation investment, and real estate investment have yields that are significantly less (at the 95 percent confidence level) than the yield on one-to-four family mortgage loans. The Brown-McKenzie (87) Study also found that land loans and nonresidential mortgages provide virtually no diversification benefits.

Moreover, a study conducted by Dr. George Benston supports the proposition that high-ratio loans are a substantial cause of failure or insolvency in a majority of insured institutions.[6] Specifically, Dr. Benston found that 90 percent of the institutions that failed in 1986 had over ten percent of their assets in nonresidential real estate loans. Dr. Benston also contended that the Board's own studies strongly support the proposition that these loans are a substantial cause of failure or insolvency in a majority of insured institutions. Furthermore, in an article published in the *American Banker*, Dr. Benston contended that the Board should "delineate and control low-equity loans that really might be excessively risky investments".[7] Dr. Benston noted that "[a] low equity or joint venture loan * * * doesn't require and often doesn't permit * * * monitoring and management [by the institution of the assets servicing such loans]. Should things go wrong, [the borrower] might bail out and leave the S&L holding an asset worth less than the outstanding loan balance."

The nature of the loans covered by this regulation, the Board's supervisory experience, and the economic studies available to the Board all suggest that those loans are associated with increased risk and loss to the FSLIC fund. The Board finds that this risk warrants a supervisory review process when the aggregate amount of an insured institution's high-ratio loans and direct investments exceeds the applicable threshold level set forth in § 563.9–8(c), as amended.

A few commenters asserted that the proposal is unsupported by the studies cited by the Board in the proposed rule. Lexecon Inc., an economic consulting firm writing on behalf of an insured institution, contended that there are no studies that address whether equity risk investments are in fact risky and attempted to refute various studies cited by the Board in support of the proposal.

Lexecon first asserted that even if equity risk investments are risky, it does not mean that insured institutions should be precluded from such investments. It contended that the problem is not in the risk of such investments but rather in the incentives created by the current deposit insurance scheme. Specifically, Lexecon argued that because of the current insurance scheme, insolvent or nearly insolvent thrifts face a "moral hazard" problem, *i.e.*, they have an incentive to engage in highly speculative ventures that offer the prospect of higher returns. If the investment is profitable, the thrift becomes solvent; if the investment fails, the FSLIC bears the cost. Thrifts with substantial capital have different incentives because any losses they incur will be borne by the owners unless the losses are severe enough to cause insolvency. Lexecon argued that the proposal does not solve the "moral hazard" problem because it does not distinguish between thrifts at or below the line of insolvency and those with acceptable levels of capital and therefore would not prevent acts that put the FSLIC fund at risk.

Lexecon noted that the final revised direct investment regulation recognizes the fact that well capitalized institutions pose less threat to the FSLIC than poorly capitalized thrifts, but argued that the capital ratio alone is insufficient to indicate whether an institution is truly well capitalized. Lexecon contended that capitalization is a function of the ratio and the absolute size of the firm and that smaller institutions need higher capital ratios than large thrifts. In studying the universe of thrifts, Lexecon found that 60 percent of the smallest thrifts have tangible capital of more than 6 percent while only 14 percent of the largest thrifts have more than 6 percent tangible capital. Further, its studies showed that, of the smallest thrifts, only 6.5 percent had direct investments while 54.6 percent of the larger thrifts had direct investments. Based on these results, Lexecon asserted that the proposal will allow many small thrifts to make various equity risk investments unimpeded, but will in effect prevent many large and healthy thrifts from making direct investments.

In the Board's view, Lexecon's analysis fails to refute the studies relied upon by the Board in the final revised direct investment rule and in the equity risk investment proposal. First, contrary to Lexecon's assertions, the final equity risk investment regulation does address the "moral hazard" problem; it constrains the level of equity risk investments a "troubled" thrift may make by tying an institution's ability to make equity risk investments to the amount of its tangible capital. Thus, a thrift that is insolvent or nearly insolvent would be unable to make *any* equity risk investments unless it first received approval to do so from the PSA. Moreover, the Lexecon study ignores one of the purposes of the rule, which is prospectively to prevent insured institutions from deteriorating as a result of excessive activity with respect to inherently risky investments and loans.

According to Lexecon, the Board suggests that the proposed rule is necessary to ensure the supply of mortgage credit in the United States. It argues that existing empirical evidence indicates that the mortgage market is part of a broader credit market so that a reduction in the amount of mortgage credit available from thrifts would have no effect on the overall supply of such credit or its cost.

Although the Board is committed to continuing to ensure that thrift institutions carry out their statutory mandate to provide economical home

Institutions (February 12, 1987) (hereinafter "Thompson (87) Study"); Benston, *Direct Investments and Losses of the FSLIC* (February 13, 1987) (hereinafter "Benston (87) Study"); Brown & McKenzie, Deregulation and Portfolio Returns: The Case of Thrifts, OPER Working Paper No. 126 (February 12, 1987) (hereinafter "Brown-McKenzie (87) Study"); and Passarelli-Sahadi Memo.

[6] *See* Benston (87) Study.

[7] *See* Benston, *The Bank Board Fiction of Regulatory Accounting Principles*, American Banker (January 31, 1986).

financing, the proposed rule was not intended primarily to address the supply-of-mortgage-credit issue. Rather, the proposed regulation seeks to avoid exposing either the thrift institutions or the FSLIC fund to an unacceptable level of risk by expanding the scope of the direct investment regulation to include high-ratio land loans and nonresidential construction loans.

Lexecon also criticizes the Board's use of a "tangible capital ratio standard" as a means of defining the amount of equity risk investments a thrift may make without prior PSA approval. In its view, the proposed rule discriminates against large thrifts that are less well capitalized (in tangible capital terms) in favor of small thrifts. According to Lexecon, a tangible capital ratio alone is not sufficient to indicate whether a thrift is truly well capitalized because "capitalization" is a function of both the ratio and the absolute size of the firm. In support of this point, Lexecon argues that larger thrifts generally have lower tangible capital ratios than smaller thrifts but that larger thrifts are more diversified, needing to hold fewer reserves as a result.

Many of the larger thrifts have relatively low tangible capital ratios because of the goodwill arising from recent acquisitions, some of which was from FSLIC-assisted acquisitions. The Board wishes to note that goodwill arising from FSLIC-assisted transactions is one factor the PSAs will consider in assessing waiver requests.

Clearly, large institutions with significant market capitalization have incentives to select investments wisely. Small institutions with high tangible capital ratios cannot internally achieve the diversification benefits achievable by multibillion dollar institutions. The regulatory structure presents a reasonable compromise in allowing well capitalized small institutions the flexibility to engage in direct investment projects, should they so desire, while protecting FSLIC from single large losses or many nondiversified small losses. Thus the rule does not distinguish between small and large thrifts, but instead distinguishes between those thrifts that are well capitalized and those that are poorly capitalized. In the Board's view, well capitalized institutions have a better capital buffer to protect themselves, depositors, and the FSLIC from potential risk of loss resulting from their equity risk investments. In addition to an institution's capitalization, the Board believes it is necessary to condition an institution's authority to make equity risk investments above the threshold level on other factors reasonably related to its ability successfully to undertake these kinds of investments, including the quality of the investment, the institution's investment history, ability to engage in prudent underwriting, and other related factors. The Board notes that these factors are taken into consideration by the PSAs when considering applications to exceed the applicable threshold level.

Contrary to Lexecon's assertion, the equity risk investment rule does not preclude any insured institution from making equity risk investments but rather subjects some or all of such investments (depending on the institution's capital level) to supervisory review. To the extent a healthy thrift wishes to exceed its applicable threshold level, it need merely file and receive approval of its waiver application from its PSA. In this regard, the Board notes that institutions may submit a general business plan establishing the parameters of their projected investment activity over a given time period and need not file a waiver application on a project-specific basis.

Moreover, Lexecon specifically disputed the applicability of the Brown-McKenzie (87) Study for the purpose of this regulation.[8] Lexecon's comments, however, addressed the Brown-McKenzie (87) Study as it pertains to direct investment; it did not in any way address those aspects of the Brown-McKenzie (87) Study that discussed nonresidential mortgage loans or land loans.

The Brown-McKenzie (87) Study is a statistical cost analysis. The methodology is to regress an income measure on the balance sheet, and the estimated coefficients can be interpreted as net asset yields or full liability costs. The study has three interesting features. First, it did not use sampling techniques, rather it used all insured institutions. Second, the study used time periods that encompassed a very significant variation in economic conditions confronting the thrift industry. Third, the model was constructed such that the asset coefficients can directly test the hypothesis that the yield on the asset in question is significantly different from the yield on one-to four-family loans.

One should note that accounting rules will bias the test in favor of nonresidential construction loans and land loans. This will happen for two reasons. First, such loans usually entail significant up-front loan fees. Second, the use of interest reserves can keep these loans current even after the project has become totally economically infeasible. The effect of this bias can be quite large if, as Lexecon assumes, non-traditional assets are a relatively small but rapidly growing part of the portfolio.

Over the four periods, nonresidential mortgage loans as a percent of assets ranged from 5.99 percent to 8.46 percent. Loans for the acquisition and development of land ranged from a low of 0.82 percent of assets to 2.51 percent.

The Brown-McKenzie (87) Study does not directly address the performance of high-ratio nonresidential mortgages or of high-ratio land loans. The Board does not collect data by loan-to-value ratio. Rudimentary economic theory, however, indicates that (1) borrowers with large amounts of equity are less likely to default, and (2) lending institutions are unlikely to incur losses if a borrower with high equity does default. By implication, then, the reported coefficients are net of credit losses on high-ratio loans.

The estimated coefficients in the Brown-McKenzie (87) Study indicate that for all institutions the yield on nonresidential mortgages is significantly less at the 95 percent confidence level than that on one-to-four family loans in each of the four time periods. For highly capitalized institutions the nonresidential mortgage variable is significant only for one time period. For the fourth time period one may conclude that for these highly capitalized institutions that the yield on nonresidential mortgages is less than the yield on one-to-four family mortgage loans.

For all institutions, loans for the acquisition and development of land had a positive and significant spread in one period. For highly capitalized institutions, this spread variable is significant and positive in three of the four periods. One should note that highly capitalized institutions have considerable threshold limits for direct investments and high-ratio nonresidential construction loans and land loans.

When the four time periods are pooled, nonresidential mortgages and land loans have yields that are significantly less than on one-to-four family loans. For the highly capitalized

[8] Lexecon also contended that the Koehn (87) Study was conceptually and methodologically flawed and thus does not lend support for the proposal. *See* Koehn, *FHLBB Rule 12 CFR Part 563 on Direct Investment* (January 27, 1987) (hereinafter "Koehn (87) Study"). The Koehn (87) Study was submitted as a comment to the September proposal and did not address the high-ratio loans that are in question in this rulemaking. Thus, Lexecon's criticism of the Koehn (87) Study has no pertinence to this rulemaking proceeding. The Board finds, however, that Lexecon's criticisms of the Koehn (87) Study are not valid.

institutions, these yield spreads are not significant in a statistical sense.

The Lexecon Study disputed the method of calculating asset-yield variances used by the Brown-McKenzie (87) Study. Lexecon argues that variances would be enormous if the costs associated with a particular asset were recognized early and the gains were largely deferred. This is not the case with the two loan categories in question. Income is recognized early because of loan fee income and the use of interest reserves to pay the periodic interest. These accounting rules can allow an institution to show significant initial income and huge losses thereafter.

Lexecon also contended that the Thompson (87) Study was flawed. The purpose of the Thompson (87) Study is to investigate the relationship between the portfolio composition of failed institutions and the costs to the FSLIC for resolution of those failed cases. The study differs from previous studies in that it uses actual FSLIC cost figures incurred on failed institutions over the time period from 1980 to 1986 rather than imputed estimates, and it includes those institutions that caused losses to the FSLIC. In its study, Lexecon did not employ actual FSLIC cost figures to develop its empirical relationships between the severity of loss and the presence of direct investment in failed institutions. Moreover, Lexecon used a generally accepted accounting principles ("GAAP") net worth standard, which includes goodwill and other intangibles, to estimate FSLIC losses in failed institutions, as opposed to the tangible capital standard used by the Thompson (87) Study. Because the value of goodwill in a failed institution may be negligible, Lexecon's results may obscure the loss severity relationship by understating losses in insolvent institutions.

The Lexecon Study also uses an incomplete data set to determine the relationship between the presence of direct investment and the severity of FSLIC losses in failed institutions. Specifically, Lexecon failed to include data for four quarters in which FSLIC losses were substantial.[9] The absence of data during the time in which FSLIC incurred substantial losses appears to limit the scope and applicability of the Lexecon analysis of direct investment activities.

Moreover, Lexecon apparently, but erroneously, concluded that the Thompson (87) Study used the same data as the Barth (86) Study, where losses were imputed on the basis of a "market value" concept. Consequently, it has misrepresentated the specification of the data used in the Thompson (87) Study. The Thompson (87) Study did not use the Barth (86) Study data base; it used a much larger and refined data set consisting of historical FSLIC losses. The Thompson (87) Study does not use imputed estimates of loss, but rather actual cost figures on historical and currently costed FSLIC cases. Consequently, Lexecon's comments concerning sampling bias appear misdirected because of its lack of understanding of the construction of the data.

Lexecon disputed the Barth (86) Study for two reasons. First, it alleged specification bias because the data set did not include non-failed institutions. The issue of specification bias is an empirical one, and it can be raised against virtually all econometric studies that use a sample that is truncated in any way. The Barth Study used such a truncated sample because *failed* institutions are of most concern to the FSLIC.

The second criticism of the Barth (86) Study is that the coefficients may measure a spurious correlation between the remaining assets and failure costs at the time of failure. Implicit is the belief that such assets are profitable but illiquid and all the more liquid assets have been sold. The Board notes that this has not been true in its supervisory experience.

As this discussion of Lexecon's submission demonstrates, the Board is not persuaded that its reliance on the studies cited and discussed in its final revised direct investment rule and its equity risk investment proposal is misplaced. On the contrary, the Board finds that those studies support the conclusion that *all* acquisition, development and construction loans pose a significantly higher risk to insured institutions, their depositors, and the FSLIC than do investments or loans that traditionally made up the bulk of a thrift's portfolio, such as one-to-four family residential mortgage loans.

Based on the record here, the Board believes that justification exists to limit thrifts' investments in *all* high-ratio construction loans, including high-ratio loans for the construction of residential properties, and to require incremental capital on all such loans. The Board elects not to extend the amendment to high-ratio residential construction loans for the present, however. As mentioned above, the Board has often stated its intent to carry out its statutory mission to help provide sound and economical home financing and believes this purpose should inform its efforts to safeguard against unacceptable levels of risk. To achieve this goal, the Board has chosen to exempt most high-ratio residential construction loans from the scope of this regulation.[10] Of course, the Board reserves the right to revisit this issue based upon its future experience with high-ratio residential construction lending.

Several commenters urged the Board to clarify what portion of a high-ratio loan should be counted as an equity risk investment, *i.e.*, whether an institution must include the entire amount of a high-ratio loan in computing its aggregate equity risk investment or should include only that portion of the loan that exceeds the loan-to-value ratio.

The Board has determined that the entire amount of a high-ratio loan must be included by an institution in computing the amount of its aggregate equity risk investment for purposes of this regulation as well as for purposes of computing its incremental capital requirement. The Board finds that to do otherwise would defeat the purpose of the rule because, based on its supervisory experience, in most instances, the amount of the loan which is at risk is far in excess of that portion of the loan that exceeds the specified loan-to-value ratio. All of the example loans previously discussed have involved such massive losses. Moreover, this treatment is analogous to that afforded to slow loans for purposes of the Board's scheduled item regulation. *See* 12 CFR 561.15 (1986). Additionally, for purposes of private mortgage insurance for one-to-four-family mortgages, the premium on such insurance is based on the entire amount of the loan, not just the portion that exceeds the applicable percentage, and such insurance usually continues to remain in force until the loan is paid down below the applicable percentage.

Finally, many commenters opposed the proposed limit set by the loan-to-value ratio, contending that the limit is overbroad and unduly harsh. One commenter asserted that the loan-to-value ratio should be established by management, not the Board, contending that such ratios are part of underwriting

[9] *See* Lexecon Study, p. 10, Table 1. The data missing are for the third and fourth quarters of 1985 and the first and second quarters of 1986. FSLIC losses in these periods may be significantly higher in failed institutions where direct investments and ADC loans were present.

[10] Investments in, as distinct from high-ratio loans for, residential real estate are covered by this rule. *See* discussion, *infra* pp. 81.2

standards and are not a regulatory matter.

Several commenters asserted that the 80 percent loan-to-value ratio is too low and would preclude institutions from competing with commercial banks and insurance companies and thereby would limit an institution's portfolio diversification. Additionally, one commenter contended that the ratio as proposed would not permit institutions to work with borrowers and make appropriate adjustments during the course of the loan and consequently could require foreclosure in many instances where even some temporary adjustment would enable the loan to be saved from such a drastic remedy.

A few commenters urged the Board to raise the loan-to-value ratio to 90 percent to make it compatible with the 90 percent loan-to-value ratio permitted for residential loans. Another commenter suggested that the ratio be set at 95 percent.

The Board continues to believe that the 80 percent loan-to-value ratio is the most appropriate limit to further the purpose of this regulation. As noted above, one purpose of the equity risk regulation is to monitor an institution's equity investment risk in order to avoid exposing either the institution or the FSLIC to an unacceptable level of risk. Both economic theory and the Board's supervisory experience indicate that land loan and nonresidential construction loans with loan-to-value ratio greater than 80 percent expose insured institutions and the FSLIC to undue risk.[11]

The Board notes that the 80 percent ratio is analogous to the treatment of one-to-four family residential mortgage loans under the Board's regulations. Specifically, § 563.9–7 of the Board's insurance regulations requires private mortgage insurance on the top 20 percent of a one-to-four family single family loan if the original loan-to-value ratio is in excess of 90 percent. 12 CFR 563.9–7; 545.32(d)(2) (1986). Industry practice, however, is to require private mortgage insurance if the original loan-to-value ratio is in excess of 80 percent.

As discussed above, both economic studies and the Board's supervisory experience demonstrate that high-ratio land loans and nonresidential construction loans subject insured institutions and the FSLIC to increased risk of loss. Moreover, the Board has found that the losses associated with these types of loans are much greater than the losses associated with one-to-four single family mortgage loans. Additionally, the yields on such high-ratio loans tend to be less than the yield on residential loans. These factors would justify a lower loan-to-value limit for high-ratio loans than the limit on single family residential loans. The Board, however, has determined to treat high-ratio loans similar to single family residential loans for purposes of this regulation. Thus, the Board is adopting the 80 percent loan-to-value ratio as proposed.

3. Increased Incremental Capital Requirements

Several commenters opposed the increased incremental capital requirement for high-ratio loans. One commenter contended that it is premature to amend the regulatory capital regulation to require higher incremental capital for high-ratio loans since the regulation has only been in effect for a few months. A few commenters contended that in order to comply with the new higher incremental capital requirement on high-ratio loans, institutions will be forced to seek high yielding assets which in turn may pose higher degrees of risk.

Another commenter asserted that the risks posed by high-ratio loans are already addressed by the Board's classification of assets regulation, and therefore an additional incremental capital requirement is unnecessary.

One commenter contended that the Board should treat nonresidential construction loans less restrictively with regard to the incremental capital requirement because of the Board's reliance on R–41c appraisal standards. *See* ORPOS Memorandum No. R–41c, Appraisal Policies and Procedures of Insured Associations and Service Corporations (September 11, 1986). This commenter asserted that R–41c discounts value over time and thereby reduces the overall value of a project. Compounding this by requiring additional incremental capital appears to be resolving the problem twice.

As discussed above, various economic studies, as well as the Board's supervisory experience, show that high-ratio land loans and nonresidential construction loans pose the same high level of risk to the FSLIC that is posed by the other categories of equity risk investments that are currently subject to incremental capital requirements. Moreover, the OPER studies show that nonresidential construction and land loans are associated with reductions in the market value of institutions and have negative effects on other measures of capital. *See* 52 FR at 8210. To better protect against the inherent riskiness of these high-ratio loans, and to shield the FSLIC from excessive losses, certain adjustments have been made to the basic percentage capital requirements contained in the regulatory capital regulation, 12 CFR 563.13. These adjustments for the increased risk are reflected in increased incremental capital requirements, made by adjusting the calculation of an institution's contingency component, for insured institutions that make such inherently risky investments.

As currently written, the regulatory capital regulation requires institutions to hold up to ten percent incremental capital for nongrandfathered direct investments (*i.e.*, investments in equity securities, real estate, service corporations, and operating subsidiaries), but only up to four percent incremental capital for nongrandfathered land and nonresidential construction loans. When the capital rule was originally formulated, however, the Board explicitly noted the future possibility of eliminating this differential and assessing a comparable capital requirement (*i.e.*, up to ten percent) on these other forms of equity risk investments. 51 FR 16550, 16560 (May 5, 1986).

Based upon the studies and supervisory experience discussed above, and upon further consideration, the Board has concluded that the potential threat posed by these high-ratio loans is as great as that posed by direct investments. Accordingly, the Board has determined that a comparable requirement of up to ten percent incremental capital should be assessed on all equity risk investments, including high-ratio land and nonresidential construction loans.

In further response to objections raised by commenters, the Board once again notes that any additional protections from the classification of assets and R–41c appraisal requirements are not substitutes for requiring increased capital reserves against investments involving a high degree of risk. Classification is a method for identifying, at an earlier date than otherwise possible, particular assets that may result in losses. However, it does not require that the institution provide a cushion of extra capital at the outset of a risky transaction, a time

[11] Prior to May, 1983, the Board's regulations for Federal associations provided that the maximum loan-to-value limit on a construction loan was 75 percent and the maximum loan-to-value limit on an acquisition loan was 66⅔ percent of the appraised value of the security property. *See* 45 FR 76095 (November 18, 1980). The results of the removal of that restriction are clearly illustrated by the statistics in the Board's studies and the supervisory examples discussed herein. *See also* Harris, The Party's Over, *Texas Monthly* p. 111, 113 (June 1987).

when the institution is best able to establish reserves against possible future losses. *See* 51 FR at 33573–33574.

Similarly, as discussed above, appraisal requirements alone do not provide sufficient protections, especially since these types of assets are associated with nonstandard and nonfinished products, thereby presenting even greater difficulties in obtaining an accurate appraisal on the value of the anticipated final product. The lack of an accurate appraisal, and consequent uncertainty regarding the value of the collateral, results in uncertainty regarding returns from these assets.

Accordingly, the Board has decided to adopt, as originally proposed, the amendments to the regulatory capital regulation to require institutions to post up to ten percent incremental capital for nongrandfathered high-ratio land loans and nonresidential construction loans.

4. Definition of Cost and Value

a. Cost

The Board also proposed to define the terms loan-to-value ratio and loan-to-cost ratio. Under the proposal, the term "cost" would have been defined as all projected expenses clearly identifiable with and directly related to the acquisition, development, and/or construction and marketing of real property securing a loan, including, without limitation, an interest reserve. Cost would not include developer profit or developer overhead not directly attributable to a project.

One commenter suggested that the Board modify the definition of cost to include reasonable expenses and fees normally paid to outside firms for services essential to the completion of a development project. Another commenter suggested that the term cost should be defined as the purchase price of the property if acquired in the last 12 months, plus other funds expended for the project within the last 12 months. If the property was purchased more than 12 months ago, this commenter suggested basing cost on appraisal values.

One commenter asserted that the term cost should not include any pre-acquisition items, such as the costs of surveying and zoning, since these expenses are undertaken before a decision is made to purchase property and therefore do not bear on the risk a thrift takes by loaning money for the actual acquisition of land.

One commenter argued that the definition of cost is vague enough effectively to preclude refinancing, particularly for property that has appreciated substantially.

One commenter asserted that the definition of cost should provide that it does not include interest on the holding of the land or other property subject to the loan. Further, this commenter urged that the definition of cost should include both developer profit and overhead that is attributable to the property.

One commenter contended that the definition of cost is unclear with regard to the use of "lender's cost" and whether the modifier "not directly attributable to a project" in the phrase "cost shall not include developer profit or developer overhead not directly attributable to a project" relates to both "developer profit" and "developer overhead".

One commenter suggested that the definition of cost should clarify that costs incurred by a centralized office, which conducts the operation of several projects, could be directly attributable to one project.

One commenter contended that the definition of cost makes no provision for properties that have been in developer inventory for considerable periods and have appreciated in value. This commenter argued that the loan-to-cost ratio should only apply with respect to security property acquisitions relatively contemporaneously with a loan.

After carefully considering the issues raised by the commenters, the Board has determined to delete the definition of cost and the reference to cost from the regulation. The Board continues to believe that an institution should not make a loan with a loan-to-cost ratio of greater than 100 percent. The fact that commenters could not in any way agree on what the definition of "cost" should include, and the fact that there is no standard industry or accounting definition of cost, suggest to the Board, however, that a loan-to-cost ratio would not be a useful standard for measuring equity risk investment.

b. Value

The Board proposed to define the term "value" as the most probable price that a property would bring in a competitive market under all conditions requisite to a fair sale, with the buyer and seller each acting prudently and knowledgeably, and with the price not affected by undue stimulus, special or creative financing, or sales concessions granted by anyone associated with the sale, as set forth in an appraisal issued in conformance with the requirements of 12 CFR 545.32(b)(1).

Several commenters asserted that the Board has placed too much emphasis on appraisals, contending that appraisals are only as good as the appraisers' ability to predict the future and thus are not adequate to measure the value of property upon completion. Further, one commenter argued that such exclusive reliance on subjective valuation notions puts management in a position of not knowing whether or not examiners will take the position that a loan is in fact a high-ratio loan, and therefore subject to the rule. One commenter argued that, because of legislative, regulatory, and judicial action, much confusion exists in the industry as to what will be upheld as a valid estimate of value for loan properties. Thus, this commenter contended, until the proper parameters for appraisals and cost calculations are established, adoption of the proposal is premature.

One state-chartered institution strongly opposed the definition of "value" because of the reference in the definition to § 545.32 which is applicable only to Federal associations. This commenter argued that § 545.32 refers to appraisal guidelines that are not contained in any regulation adopted by the Board. Thus, the commenter contended that the Board must repropose the rule in a form that sets forth all substantive provisions rather than incorporate regulations inapplicable to state-chartered institutions and incorporating unpublished guidelines subject to revision by the ORPOS at any time without notice.

Several commenters urged the Board to clarify the point at which a loan is determined to be a high-ratio loan. Specifically, these commenters asserted that the regulation should make explicit that for purposes of the definitions, the ratios are calculated at the time of origination of the loan and that such loans do not later become equity risk investments if their present value or cost changes. Further, some commenters contended that once a high-ratio loan is reduced through a pay down or through security appreciation, it should no longer be subject to the equity risk investment regulation.

In the Board's view, an appraisal of collateral that follows acceptable appraisal methodology is prudent and necessary prior to the making of any loan. Moreover, the definition of "value" conforms with industry practice and therefore is an acceptable method of determining the loan-to-value ratio of a particular loan.

On May 5, 1987, the Board proposed a rule and policy statement relating to the appraisal policies and practices of insured institutions. Board Res. No. 87–258, 52 FR 18386 (May 15, 1987). This proposal would codify the standards to

be used by examination and supervisory staff in determining compliance with the appraisal requirements of 12 CFR 563.17-1 and 563.17-2. Specifically, the proposal would clarify, simplify, and codify the current R-41c guidelines with respect to management policies, appraisal content, appraisal management, and related considerations. The comment period on the proposal is scheduled to end on July 14, 1987.

Today, the Board is amending the definition of "value" to delete the reference to 12 CFR 545.32(b) and to insert in its place 12 CFR 563.17-1 and 17-2 (1986). The Board has made this change in order to reference regulations that apply to all insured institutions rather than only to Federal associations. The Board notes, however, that if the appraisal proposal is adopted in final, the definition of "value" set forth in this regulation will be amended at that time to incorporate the appraisal requirements of any such rule. *See* 52 FR at 18391-18394.

Finally, the Board also is amending the definition of "value" to clarify that the loan-to-value ratio is calculated at the time of origination of the loan, and that such loans do not later become high-ratio loans if their present value changes. The Board also takes this opportunity to make clear that once a loan is determined to be an equity risk investment, it continues to be subject to the equity risk investment rule until the loan is paid down below the 80 percent ratio. The Board has determined, however, that a high-ratio loan does not cease to be an equity risk investment as a result of appreciation of the underlying collateral. The Board notes that this treatment is analogous to that accorded to many one-to-four-family mortgages where private mortgage insurance continues to remain in force irrespective of the appreciation of the underlying collateral. Moreover, to allow appreciation to reduce a high-ratio loan to a low-ratio loan would result in disparate treatment of loans that were low-ratio at the time of origination but that become high-ratio loans as a result of security depreciation. As the Board has indicated above, a loan that was a low-ratio loan at the time of origination does not become a high-ratio loan if the present value of the underlying collateral changes.[12]

5. Portfolio Diversification

As indicated above, the Board proposed to amend the diversification requirement to provide that an insured institution may not, without prior PSA approval, invest in any one real estate project an amount exceeding the lesser of 25 percent of the institution's regulatory capital, as defined in § 561.13, or the amount permitted for its aggregate loans-to-one borrower, set forth in § 563.9-3 (but not the limit on commercial loans). The current aggregate loans-to-one borrower limitation is 100 percent of regulatory capital. On August 15, 1986, the Board proposed to reduce the limit to 25 percent of regulatory capital. *See* Board Res. No. 86-855, 51 FR 30225 (August 25, 1986).

In conjunction with the proposed amendment to the diversification requirement and expansion of the scope of the direct investment rule, the Board also proposed to amend the definition of "investment in real estate" under § 563.9-8(b)(6) to include amounts of outstanding nonresidential construction and land loans with high loan-to-value or loan-to-cost ratios. The proposed diversification requirement for a single real estate project thus would apply to amounts representing both equity interests and high-ratio loans identified by the Board as exposing the institution to excessive equity risk. Such high-ratio land loans and nonresidential construction loans would also remain subject to the aggregate loans-to-one borrower limitation set forth in § 563.9-3.

Twenty-three commenters specifically addressed this aspect of the proposal. Several commenters argued that, beyond the Board's reference to its general supervisory experience, there is no empirical basis for reducing the portfolio diversification requirement to 25 percent of regulatory capital. They contended that contrary to the Board's claim in the preamble, there is not a 25 percent limitation on ownership of equity securities; in fact, that portion of the diversification regulation, contained in paragraph (e)(1) of § 563.9-8, allows aggregate ownership of equity securities of up to 100 percent of regulatory capital.

Moreover, the commenters argued that investments in real estate are less risky than securities investments, especially given that thrifts have extensive experience with real estate lending and that real estate always maintains some value even in economically depressed areas. Other than in cases of abuse or fraud, a real estate project will rarely, if ever, become a complete loss to the institution. Rather than change the direct investment diversification provision, several commenters urged the Board to focus on the loans-to-one-borrower limitation to promote prudent diversification. Similarly, a few commenters suggested tying the portfolio diversification requirement solely to the loans-to-one borrower limitation.

Some commenters asserted that the Board is overreacting to the apparent problem caused by certain state-chartered institutions' abuse of their authority to make direct investments. The synergistic effect of the drastic reduction for investment in a single real estate project from 100 percent to 25 percent of regulatory capital, combined with the inclusion of certain real estate loans as equity investments and the reduction in the direct investment threshold, is far more drastic than the similar 100 to 25 percent reduction proposed for the loans-to-one-borrower rule.

Several commenters contended that the diversification limitation is faulty because it fails to distinguish among institutions based upon their financial health and track record. They urged the Board to avoid a piecemeal exemption system and instead to permit strong institutions with good records in this line of lending to retain the current 100 percent standard upon PSA approval.

Several commenters argued that the proposed tightening of the diversification requirement may actually result in riskier portfolios in some institutions, contending that the regulation may promote the buying and selling of loan participations among institutions. These commenters argued that multiple participations are far riskier than total control by a thrift, which can then take a closer, more direct interest in the project and the developer. Small institutions, in particular, may be forced to take only very small, and often more risky, real estate loans.

Many commenters claimed that the 25 percent threshold is quite low and will be triggered in far too many circumstances. Short of elimination of the restriction, and continued reliance on the 100 percent loans-to-one borrower figures, some commenters

[12] The Board wishes, however, to distinguish the situation where the value of the underlying collateral changes from the situation where the appraisal supporting the loan was faulty. As indicated in the text, changes in the value of the collateral securing the loan will not cause the loan to be either included or excluded from the scope of the equity risk investment rule. Where, however, the appraisal was faulty and the examiner orders a new appraisal, the loan will be included within the scope of the equity risk investment rule if a new appraisal shows a lower value for the security property and, hence, a higher loan-to-value ratio. By faulty appraisal, the Board means an appraisal not in compliance with its appraisal standards. *See* 12 CFR 563.17-1, 563.17-2 (1986). *See also* 52 FR 18306 (May 15, 1987) (proposed rule on appraisal standards).

suggested a more liberal figure of 50 or 75 percent of regulatory capital.

Many commenters expressed concern regarding the impact of the proposal on smaller institutions. Several of these commenters contended that smaller institutions, even if well-capitalized, may effectively be excluded from the direct investment market since attractive real estate investments typically require amounts greater than the triggering threshold. For example, nearly three-quarters of the thrift industry has assets of less than $200 million. Thus, even many well-capitalized institutions might require PSA approval for loans on projects of merely two million dollars, a very small sum in the real estate development market. Commenters asserted that the proposal could cause such institutions to turn away further business from larger, well capitalized developers, notwithstanding established and profitable business relationships on community projects in the past. Thus, the proposal effectively permits greater leeway to larger and relatively poorly capitalized institutions, as opposed to their smaller, better capitalized counterparts. A few commenters urged the Board to amend the provision to include a proviso that would set a floor on the diversification requirement so that small institutions would not be excluded from investing in real estate projects.

One commenter suggested that institutions that are in compliance with their minimum regulatory capital requirements should be permitted to invest up to 100 percent of their regulatory capital in any one real estate project or in the securities of any one issuer. For institutions not meeting their capital requirements, a lower diversification level should apply.

Similarly, one commenter suggested permitting institutions with regulatory capital of 5 percent or greater to invest up to 100 percent of their regulatory capital in any one real estate project; permitting institutions with regulatory capital of greater than 3 percent but less than 5 percent to invest up to 50 percent of their regulatory capital in any one real estate project; and permitting institutions with less than 3 percent regulatory capital to invest up to 25 percent of their regulatory capital in any one real estate project.

After carefully considering the issues raised by the commenters and upon additional staff analysis, the Board has determined to apply only the limitation on aggregate loans (but not commercial loans) of the loans-to-one borrower rule to the aggregate of an institution's investment in any one real estate project.[13] Thus, under the final rule the aggregate amount of investment in any one real estate project would be the lesser of 100 percent of regulatory capital or 10 percent of withdrawable accounts, or if greater than these two amounts, $500,000 (adjusted annually to reflect movement in the Consumer Price Index).

It is the Board's intent that no institution be permitted to invest more than the aggregate limitation on loans-to-one-borrower in any one real estate project, including, but not limited to, acquisition, development and carrying costs and assumption of any debt or liability in connection with such project. The Board notes that diversification of investments of service corporations would only be required if an institution consolidates its equity risk investments with the equity risk investments of its subsidiaries for purposes of the rule.

The Board notes that the final rule amends the definition of "investment in real estate" under paragraph (b)(6) to include amounts of outstanding nonresidential construction and land loans with loan-to-value ratios greater than 80 percent. Thus the final diversification requirement for a single real estate project applies to amounts representing both equity interests and high-ratio loans identified by the Board as exposing the institution to excessive equity risk. Such high-ratio loans also would remain subject to the aggregate loans-to-one borrower limitation set forth in § 563.9–3.[14]

The way in which the final real estate diversification amendment and existing loans-to-one borrower rule would affect a transaction can be illustrated by examining the case where:

- Institution's regulatory capital, 7/15/87 = $4 million.
- Outstanding direct investment in a single Project A, 7/15/87 = $2 million.
- Outstanding aggregate low-ratio loans to developer XYZ Co. unrelated to Project A, 7/15/87 = $1 million.
- Developer XYZ Co. applies for additional high-ratio land loans and nonresidential construction loans for Project A = $3 million.

Under the final amendment to the real estate project diversification requirement, the institution's aggregate equity investments and high-ratio loans for Project A may not exceed its applicable aggregate loans-to-one borrower limit, which in this illustration is $4 million. Accordingly, in view of the institution's prior direct investment in Project A of $2 million, the institution may lend only $2 million of the requested $3 million added funding for Project A without prior PSA approval, since the institution's investment in Project A would now total $4 million and would thereby trigger the loans-to-one borrower limitation.

The institution also must ensure compliance with the aggregate loans-to-one borrower limitation with respect to the high-ratio loans. In the example given, the limitation applicable to all aggregate (noncommercial) loans is $4 million. Subtracting the $1 million in outstanding loans on 7/15/87 in the example, the institution could remain in compliance while lending an added $3 million. However, because of the real estate diversification requirement, the institution could deploy only $2 million to Project A without prior PSA review and approval.

In order to avoid possible double counting of such high ratio loans for purposes of calculating "aggregate equity risk investment," the Board has amended the definition of "aggregate equity risk investment" to delete the reference to high-ratio loans since such loans are specifically included within the definition of investment in real estate.

The Board notes that, on August 15, 1986, it proposed to reduce the loans-to-one borrower limit from the current 100 percent of regulatory capital to 25 percent of regulatory capital. Board Res. No. 86–855, 51 FR 30225 (Aug. 25, 1986). The Board's staff is studying the general issues that arise in connection with determining appropriate levels of diversification, including the effect of lower levels of diversification on small institutions. In the event that the Board adopts any final amendment to the loans-to-one borrower regulation, such amendment would apply to the diversification requirement for

[13] The regulatory limitations on loans to one borrower are divided into two groups: aggregate and commercial. The loans-to-one borrower regulation defines "outstanding commercial loans" as those loans made for commercial, corporate, business or agricultural purposes excluding those secured by real property 12 CFR 563.9–3(a)(3). The regulation sets forth a limit with respect to the amount of commercial loans an institution may make to any one borrower. *Id.* § 563.9–3(b)(2)(i). This limit is different than the limit applicable to aggregate loans to one borrower and is not relevant for purposes of the diversification requirement of the equity risk investment regulation.

[14] Several commenters urged the Board to exclude income producing property from the proposed 25 percent of regulatory capital portfolio diversification requirement, arguing that income producing property does not entail the same types of risk as other high-ratio loans. These comments were based on the provision in the proposal to lower the portfolio diversification requirement to 25 percent of regulatory capital. The Board has not adopted this lower limit as part of this rule and therefore finds it unnecessary to address these comments.

investment in any one real estate project.

6. Savings Clause

Many commenters strongly opposed the proposed grandfathering date of February 27, 1987, asserting that the savings clause retroactively prohibits institutions from exercising their currently valid and fully authorized investment authority on the basis of a proposal. Several of these commenters specifically objected to the fact that loans in process, but not in portfolio or legally committed to, would not be grandfathered. These commenters contended that institutions may have incurred substantial legal and operational costs underwriting such loans. In addition to the monetary costs involved in such loans, commenters asserted that institutions may be subject to legal claims by borrowers if the institution is forced to cease processing of the loan. Thus, commenters urged the Board to change the grandfathering date to enable institutions to make a smooth transition to the new expanded regulation. Commenters suggested grandfathering dates ranging from 30 days after the date of the proposal to six months after the effective date of a final regulation.

As noted in the proposal, the Board chose the February 27 date because it believed that it was imperative to eliminate any incentive for institutions to increase their high-ratio loans in anticipation of any final rule. The Board believes this concern still to be valid, and consequently has determined to retain the proposed grandfathering date of February 27, 1987.

The Board believes that the savings clause adopted today will adequately protect institutions from disruption or loss in their business plans and operations. In the event that an institution made a loan commitment between February 27, 1987 and March 16, 1987 (the date on which the proposed rule was published in the **Federal Register**) and, due to the increased incremental capital requirements under this new rule, the institution cannot satisfy the incremental capital requirements with respect to that loan commitment, the Board may, upon petition by the institution, waive the incremental capital requirements as to that loan commitment.

The February 27, 1987 date is the date on which the equity risk amendments were proposed, as well as the date on which the Board adopted the final version of the current amended direct investment rule. As noted above, the direct investment rule has been extensively commented upon by the public and the Board held hearings on the rule. The adoption of the final direct investment regulation and the proposed amendments thereto on February 27, 1987, received substantial coverage in the news media as well as in the news bulletins prepared by industry trade associations.

Under the savings clause, institutions may maintain all existing loans and may fund those high-ratio land and nonresidential construction loans to which the institution was legally committed as of the grandfathering date, February 27, 1987. Whether a particular loan qualifies as an investment to which the institution is legally committed is a question of State law to be reviewed by qualified counsel under the contract law principles of the appropriate state jurisdiction. *See* 52 FR at 8204. The Board recognizes that there may be some instances where the institution was bound, as of the grandfather date, under State contract law even though the agreement in principle had not yet been fully elaborated into a formal, finally written and signed contract document. These investments may qualify for grandfathering treatment under the savings clause. *See* Op. G.C. (per Norman H. Raiden) (November 12, 1985); and Op. G.C. (per Julie L. Williams) (March 21, 1986). Moreover, PSA approval, where appropriate, is potentially available for any high-ratio loan not falling within the savings clause.

One commenter expressed concern that the grandfathering treatment of direct investments set forth in the final revised regulation does not appear to apply to operating losses. This commenter contended that by not allowing grandfathering treatment for operating losses and by decreasing the direct investment threshold, the Board may impair or perhaps eliminate the ability of certain institutions to proceed with business plans that were implemented and conceived several years ago.

The savings clause grandfathers aggregate or specific types of actual or prospective equity risk investments as of a certain date that would not conform to the requirements of the regulation. In the Board's view, the savings clause was not intended to apply and does not apply to operating losses. The Board believes that such losses must be included as outstanding equity risk investments. The Board notes, however, that the amount of losses incurred on such investments may be netted against gains realized on other such investments and with only the net loss included within the calculation of aggregate equity risk investment. The Board believes that the result this achieves is appropriate because it encourages prudent investment and loan activity by insured institutions by requiring that net losses be included as outstanding investments.

Finally, a few commenters suggested that the Board add a provision to the savings clause specifically to grandfather modifications, renewals, and refinancing of grandfathered loans. While the Board recognizes these commenters' concerns, it declines at this time to add regulatory language on this point. The PSAs will address this issue if it arises on a case-by-case basis. To the extent this issue cannot be resolved by the PSAs, then the ORPOS or the Office of General Counsel will determine the resolution of this issue and will make any such resolution available to the public.

7. Relationship Between Final Revised Direct Investment Regulation and the Proposal

Without addressing the specific aspects of the proposal, several commenters urged the Board to reconsider the use of tangible capital in the final revised regulation. Some commenters argued that the new regulation discriminates against those institutions that have goodwill on their books and penalizes those institutions that have assisted the FSLIC by acquiring failing institutions. Some of these commenters expressed a fear that the Board may begin to use a tangible capital standard for other Board regulations.

While the Board understands the concerns raised by the commenters, it continues to believe that the use of a tangible capital standard to determine an institution's applicable threshold level is the most effective means of adequately protecting insured institutions and the FSLIC from loss. Again, the Board stresses that the threshold is not a barrier to equity risk investments but rather subjects some or all (depending on the institutions' capital level) of such investments to supervisory review.

The Board takes this opportunity to note again that its adoption of tangible capital for purposes of establishing equity risk investment threshold levels should not be construed as a signal that the Board has determined that such a standard is appropriate in addressing compliance with other Board regulations. Any changes in other Board regulations will be based on the evidence available and arguments presented if and when such changes are proposed. Additionally, the Board

reiterates that the market value of an institution—which encompasses the goodwill representing the going concern value of an institution—is among the factors that the PSA should take into account in considering any waiver application. *See* 12 CFR 563.9-8(g)(3)(iii)(A)(*1*)(*v*), as amended.

8. Prohibition Against Investment by Insured Institutions in Stock of Other Insured Institutions

The Board proposed an amendment to paragraph (d)(3) of the final revised rule in response to suggestions raised by commenters to the September proposal. Specifically, one commenter urged the Board to modify the § 563.9-8(d)(3) prohibition against an insured institution's investment in the stock of another insured institution. It is argued that, given current and expected future merger activity by stock institutions, flexibility to acquire stock should not be precluded. Thus, the commenter urged that the rule be modified to permit the acquisition of stock in the target institution by the acquiring institution as part of a two-step acquisition, subject to the conditions set forth in an Office of General Counsel opinion dated January 31, 1986. Accordingly, the Board proposed to revise paragraph (d)(3) to clarify that the acquisition in question must be connected with the transaction contemplated by the rule. Alternatively, the Board requested comment on whether it may be appropriate to delete the paragraph (d)(3) prohibition altogether.

Although a few commenters supported the proposed amendment and/or deletion of paragraph (d)(3), upon further consideration of this issue the Board has determined not to amend or delete the prohibition at this time. The Board has determined to take this opportunity to clarify the January 31, 1986 opinion. Specifically, an insured institution may invest in the stock of another insured institution or a nondiversified savings and loan holding company provided that the investment is made pursuant to a transaction for which the institution has filed an application under §§ 546.2, 552.13 or § 563.22, or Part 574. An investment made under these circumstances would not constitute a violation of paragraph (d)(3) of the equity risk investment rule. The Board notes, however, that if such application is denied, withdrawn, or returned to the applicant as incomplete, the institution shall promptly divest of the investment.

9. General Alternative Solutions

A few commenters asserted that most high-ratio loans would already be designated as equity investments under GAAP and thus are already covered by the direct investment regulation. Similarly, several commenters asserted that the Board should rely solely upon GAAP and the Board's proposed regulation on accounting for ADC loans to determine which loans should be classified as equity investments. Under proposed revisions to § 571.17, this approach would require all loans with "equity kickers" of over 50 percent to be treated as equity risk investments. *See* Board Res. No. 87-240, 52 FR 7087 (March 13, 1987). On the other hand, where ADC loans involve smaller or no equity participations, other factors would come into consideration. Relevant factors would include the existence of takeout commitments or noncancellable sales contracts or lease commitments from creditworthy independent third parties, "qualifying" guarantees, and recourse to other substantial tangible, saleable assets of the borrower. The presence or absence of factors such as these would provide a more focused method of determining whether or not a particular loan is "substantially analogous" to an equity investment. Moreover, periodic reassessment could easily be required to see whether a loan is properly classified. A further benefit of this approach is that, in looking at all the characteristics of the loan product, less reliance need be placed on the subjective appraisal process.

As discussed above, the OPER Studies and the Board's supervisory experience demonstrate that high-ratio land loans and nonresidential construction loans entail risks that are fundamentally similar to equity risk and therefore should be treated in the same manner as direct investments. Contrary to the commenters' assertions, not all high-ratio loans would be characterized as direct investments under GAAP or the Board's proposed policy statement on accounting for ADC loans. *See Notice to Practitioners on ADC Loans,* C.P.A. Letter, February 10, 1986; 52 FR 7087 (March 13, 1987). For example, a 100 percent loan with no equity kicker, or a small equity kicker, may be classified as a loan under GAAP and consequently such a loan would fall outside the scope of the current direct investment rule. It is the Board's intent in adopting the equity risk regulation, to subject to supervisory review a class of lending transactions where the lender bears significant risk due to many factors, including unfavorable economic events. The Board emphasizes again that the regulation adopted today does not prohibit insured institutions from making high-ratio loans. Rather, it merely subjects some or all of an institution's equity risk investments (depending on the institution's level of capital) to supervisory review. The Board notes that the PSAs may take into consideration such factors as takeout commitments, guarantees, and assets of the borrower in reviewing any waiver application to exceed the applicable equity risk investment threshold.

Several commenters contended that land loans and nonresidential construction loans, when properly underwritten, carry a significantly higher yield than the yield on one-to-four family mortgages. Similarly, commenters asserted that the real problem is not high-ratio loans, *per se,* but poor underwriting policies, faulty appraisals, and fraud or mismanagement by a limited number of individual institutions. These commenters urged the Board to focus on those institutions that have caused the problems and not penalize those institutions that are well run and well managed. Further, these commenters asserted that the Board should address the risks of high-ratio loans through its regulations on loans, classification of assets and appraisal policies as well as through training and upgrading of supervisory and examination personnel and not through the direct investment rule.

The Board recognizes that losses on land loans and nonresidential construction loans often stem largely from the underwriting and investment policies ("operating policies") of individual institutions. The Board's supervisory experience contains numerous examples of severe underwriting and loan administration deficiencies with regard to these types of loans, including failure to verify project progress prior to disbursing draws, appraisals not conforming with the Board's Memorandum R-41c, as currently clarified, and little or no management analysis of project feasibility or the ability of the borrower to repay the loan.

In the current deregulated environment, the operating policies adopted by each institution often assume much greater importance as the major determinant of overall performance. The Board recognizes that a principal element of deregulation is greater freedom for an individual institution to select its own operating policy. Further, detailed regulation of each institution's operating policies is neither feasible due to staffing limitations nor necessary; most institutions are capable of selecting

prudent operating policies if motivated to do so.

Consequently, the Board has found that the regulatory approach chosen is a more effective and practical solution to the problem posed by these high-ratio loans than the alternatives suggested. While the Board recognizes that some failures result from fraud and mismanagement, faulty appraisals, and/or poor underwriting practices, merely relying on existing or expanded supervision would not be an adequate alternative to the regulation. By necessity, examination lags far behind an institution's loan activity. Imprudent loan activity, and hence problem assets, may increase dramatically between examinations. In the Board's experience, irreparable damage can be done before the Board can make any supervisory examination and well before it can take any corrective action. The unavoidable lag between the time a loan is made and the time that the loan is reflected in statistical reports, filed quarterly by each institution, further shows that supervision is not an acceptable alternative to before-the-fact regulatory action. In the Board's view, merely escalating the supervisory attention already devoted to problem institutions would not accomplish its objective of controlling risk.

Similarly, while these problems are addressed to a certain extent by the classification of assets regulation, classification of assets also is an after-the-fact measure which, by itself, clearly does not sufficiently protect the FSLIC funds for two reasons. First, the validity of classification of assets cannot be determined until an examination is conducted, and, as indicated above, the Board's supervisory experience demonstrates that the overall financial stability of an institution and the performance of assets can change drastically between one examination and another and even between submissions of financial reports.

A second reason why the classification of assets regulation alone is inadequate to address fully the risks associated with these types of loans is the fact that the establishment of loss reserves to protect the institution or the FSLIC from losses quickly becomes meaningless where adjustments to income and the establishment of loss reserves under the regulation render an institution insolvent due to inadequate capital to absorb the realization of such losses.

Consequently, the Board believes that it is necessary that an insured institution have a sufficient level of capital to absorb potential losses before it embarks on lending strategies that entail an above average degree of risk to it and to the FSLIC. In the Board's view, the equity risk investment regulation is an acceptable alternative to regulate risky lending and investments by insured institutions.

10. Technical Suggestions

a. Definitions

i. *Real Estate Project.* A few commenters suggested that the Board define the term "real estate project" to clarify exactly what that term encompasses. The Board declines to define the term at this time in the regulatory language. The Board notes, however, that for purposes of this regulation a real estate project includes all facilities that comprise an integrated development plan for such project.

ii. *Nonresidential Construction Loans.* One commenter suggested clarifying the definition of nonresidential construction loans to assure that apartments, mobile home parks, nursing homes, and retirement homes are deemed residential in nature and thus are not subject to the rule. Similarly, another commenter suggested that multifamily loans should be specifically excluded from the definition of nonresidential construction loans.

Finally, one commenter contended that since residential construction loans are excluded from the direct investment regulation, loans to acquire land or to develop land for construction housing tracts should also be specifically excluded from the scope of the regulation.

The term "nonresidential construction loan" is defined in § 561.19 of the Board's regulations as "a loan for construction of other than one or more dwelling units." A dwelling unit is defined as "a unified combination of rooms designed for residence by one family." 12 CFR 561.19 (1986). Thus, loans for the construction of multifamily housing are excluded from the definition of nonresidential construction loans.[15] *See* 52 FR at 33581. In the Board's view, however, construction loans to finance the building of mobile home parks, nursing homes, and retirement homes are, for purposes of this regulation, nonresidential construction loans. *Cf.* 12 CFR 561.15(l) (1986). The Board notes that this treatment is consistent with the scheduled items regulation; for purposes of that rule, the term residential real estate does not include nursing homes, homes for the aging, and mobile home parks.

Moreover, the Board has determined that loans to acquire or develop land for construction of housing tracts are not excluded from the scope of the regulation. In the Board's view, land loans for single family or multifamily residential development pose risks similar to other types of land loans and therefore are subject to the rule. Furthermore, land loans may be difficult to classify as to eventual use given factors such as time lags from origination of the loan until completion. Consistent with the capital regulation, however, loans will no longer be included within the definition of "land loans" once financing has been obtained for the construction of residences. *See* 51 FR 33581. At this point, the loan, to the extent it is not considered to be a direct investment under GAAP, would be considered a residential construction loan and therefore outside the scope of the equity risk regulation, including the incremental capital requirements.

iii. *Real Estate Owned.* Several commenters urged the Board to amend the definition of "aggregate equity risk investment" to specify that high-ratio loans made to dispose of real estate owned are excluded from the definition, arguing that such loans should be excluded because the regulation specifically excludes real estate owned from its application.

The Board has added a further proviso to the definition of "investment in real estate" in order to make the treatment of high-ratio loans similar to that afforded to investments by clarifying that the regulation does not cover loans made to dispose of real property used primarily by the institution for offices or other related facilities.

b. *Federal Associations.* One commenter suggested modifying the proposal to be consistent with the service corporation regulation for Federal associations, arguing that the proposal does not distinguish between investments and conforming loans for Federal associations and thus treats both within the 3 percent limit.

Federal associations have always been subject to the direct investment rule. Section 545.74(d)(1) of the Board's regulations, which applies only to Federal associations, currently authorizes a Federal association to invest up to 3 percent of its total assets in service corporations without approval by the PSA, regardless of the association's adherence to its minimum regulatory capital requirements. Section 545.74(d)(2) permits associations that meet their minimum capital

[15] The Board notes, however, a distinction between an institution's lending for multifamily projects and its direct, or equity, investment in such projects. The latter type of investment has always been, and continues to be, included within the scope of this rule. *See* 50 FR at 6921.

requirements to make additional conforming loans to service corporations up to the amount of the association's regulatory capital or one-half of regulatory capital, depending on certain circumstances enumerated in the regulation. Conversely, § 563.9–8, which applies to all insured institutions, requires that an association that fails its minimum regulatory capital requirement must seek the approval of its PSA prior to investing in a service corporation.

Moreover, to the extent an association wishes to make additional investments in or conforming loans to its service corporations and the aggregate amount of such additional investments or loans would cause the association to exceed its applicable threshold level under paragraph (c) of the equity risk investment rule, the association would have to apply for and receive PSA approval pursuant to § 563.9–8(g) before making such investments or loans.[16] The Board wishes to take this opportunity to emphasize that the requirements of the equity risk investment rule take precedence over § 545.74 and consequently may limit the extent of investment permitted under § 545.74. *See* 12 CFR 545.74, 563.9–8; ORPOS Memorandum No. T 77 (Nov. 20, 1985).

11. PSA Waiver Process

Several commenters contended that the proposal coupled with the new threshold limitations will place strict limitations on the investment authority of thrifts. These commenters argued that the harsh effect of the rule is not diminished by the option of obtaining PSA approval because the delay inherent in the PSA approval process may cause many opportunities to be lost.

Several commenters contended that if the regulation is adopted as proposed, the Board should amend the waiver provisions specifically to provide that institutions may seek a waiver of the portfolio diversification requirement since there is some question whether the current regulation provides for waiver by the PSA of the diversification requirement.

[16] The Board notes, however, that if an institution consolidates the equity risk investments of any of its subsidiaries with its own equity risk investments for purposes of the equity risk investment rule, loans to or investments in such subsidiaries would be excluded from the institution's aggregate threshold for equity risk investment. Obviously, with consolidation, the institution must count the equity risk investments of its service corporation, including high-ratio land loans and nonresidential construction loans as its own equity risk investments for purposes of calculating its aggregate equity risk investment.

As the Board has repeatedly noted, the equity risk investment regulation is not intended to preclude any institution from making direct investments or high-ratio loans but rather to subject some or all of such inherently risky loans and investments to supervisory review depending on the institution's capital. Consistent with this purpose, the Board has, during previous rulemakings, closely reviewed the PSA waiver process. This review has been based on extensive data developed by the Board and by, various Federal Home Loan Banks, as well as in comments and testimony from the public. *See* 52 FR at 8198–8199. While making certain minor adjustments to the waiver process, the Board has found that the waiver process is achieving the intended results in a satisfactory manner. *Id.* at 8199. No facts have been presented that cause the Board to reconsider this conclusion.

One minor modification to the regulation is warranted in order to clarify that institutions may seek a waiver of the rule's diversification requirements, contained in paragraph (e), just as they may seek waivers of the aggregate investment thresholds, contained in paragraph (c). There apparently is some lingering confusion as to the availability of PSA waivers of the diversification requirements, although the waiver and exception provisions contained in paragraph (g) of the regulation are intended to apply to all aspects of direct investment, including both the diversification type and the threshold amount restrictions in the rule. *See* 52 FR at 8210–8211; 50 FR 6912, 6913 (February 19, 1985); 49 FR 48743, 48755 (December 14, 1985). The misunderstanding apparently results from the fact that although the aggregate threshold restrictions of paragraph (c) begin with a reference to the exception paragraph (g), as well as the savings clause paragraph (f), these explicit references are lacking from the paragraphs containing the rule's other substantive restrictions. Therefore, in the interest of finally dispelling any further confusion regarding this matter, the Board has decided to add at the beginning of the diversification paragraphs (e) (1) and (2) the same reference to the savings and exceptions clauses (paragraphs (f) and (g)) as is contained at the beginning of the aggregate investment threshold restrictions in paragraph (c)(2).

D. Description of the Final Equity Risk Investment Rule

The final equity risk investment rule, as adopted by the Board, incorporates a number of changes from the former direct investment rule. The Board stresses that the purpose of the rule remains to create a process of supervisory review and approval of certain types of equity risk investments and of aggregate equity risk investment above certain threshold amounts. Therefore, the overall objective of the rule is to allow institutions the flexibility to exercise their investment powers, as independently authorized by applicable law, in a manner that does not expose either the institutions themselves or the FSLIC fund to an unacceptable level of risk, while at the same time ensuring that these institutions continue to fulfill their obligation to provide economic home financing. The changes made in the final rule are discussed below.

1. Definitions

a. Aggregate Equity Risk Investment

The Board has amended the definition of "aggregate equity risk investment" to mean the sum of investments in equity securities, real estate, service corporations, and operating subsidiaries. The Board notes that the definition of aggregate equity risk investments does not include, as a separate item, land loans and nonresidential construction loans because such loans are specifically included within the definition of "investment in real estate" for purposes of this rule.

b. Investment in Real Estate

The Board has amended the definition of "investment in real estate" to include within that definition land loans and nonresidential construction loans with loan-to-value ratios greater than 80 percent. Thus, as amended, investment in real estate includes both equity interests in real estate as well as these high-ratio loans. The Board also has amended the definition of investment in real estate to clarify that high-ratio loans made to dispose of real estate owned are not included within the scope of this rule.

c. Loan-to-Value Ratio

The final rule defines loan-to-value ratio as the ratio of the loan to the market value of the collateral. Market value means the most probable price in terms of money that a property would bring in a competitive market under all conditions requisite to a fair sale, the buyers and seller each acting prudently and knowledgeably and assuming the price is not affected by undue stimulus or special or creative financing or seller concessions granted by anyone associated with the sale. Further, value must be determined in accordance with

an appraisal issued in conformance with the requirements of 12 CFR 563.17-1 and 563.17-2 and in accordance with the guidelines set forth in Memorandum R-41c as clarified.

2. Portfolio Diversification

As amended, the new diversification provision applicable to investments in real estate applies the applicable aggregate loans-to-one borrower limitation to investment in any one real estate project, including acquisition, development, and carrying costs and assumption of any related debt or liability, and any high-ratio land and nonresidential construction loans with loan-to-value ratios greater than 80 percent.

Additionally, the Board has amended paragraphs (e)(1) and (e)(2) to clarify that institutions may request a waiver of the diversification requirements by following the procedures set forth in paragraph (g) of the rule.

3. Incremental Capital Requirement

The Board has amended its regulatory capital regulation, 12 CFR 563.13, to require that insured institutions holding equity risk investments, which include direct investments as well as nongrandfathered high-ratio land loans and nonresidential construction loans, post up to 10 percent incremental capital for such investments.

4. Savings Clause

The final rule sets forth a savings clause that provides that an institution exceeding its applicable equity risk investment threshold, or its real estate project investment diversification threshold, as of February 27, 1987, due to the inclusion of high-ratio land loans and nonresidential construction loans in total aggregate equity risk investments or due to the inclusion of such loans within the definition of investment in real estate for purposes of the diversification threshold, would not be required solely for that reason to divest itself of any such loans or nonresidential construction loans made or legally committed to on or before February 27, 1987.

The final rule also modifies the contingency component of the regulatory capital regulation, § 563.13(b)(4), to grandfather from the higher incremental capital requirements those high-ratio land loans and nonresidential construction loans made or legally committed to on or before February 27, 1987. Thus, for such grandfathered loans the incremental capital requirement would remain at up to 4 percent. With respect to nongrandfathered high-ratio land loans and nonresidential construction *(i.e.,* loans made after February 27, 1987), such loans would be included in an institution's total equity risk investment and would be subject to an incremental capital requirement of up to 10 percent. The Board notes that, similar to the treatment of other variable reserve elements under the contingency component of the regulatory capital regulation, grandfathered equity risk investments would not be subject to an incremental capital requirement but would be included in determining an institution's variable reserve concentration level.

Final Regulatory Flexibility Analysis

Pursuant to section 3 of the Regulatory Flexibility Act, 5 U.S.C. 604, the Board is providing the following regulatory flexibility analysis.

1. Need for and Objectives of the Rule

These elements are incorporated above in the **"SUPPLEMENTARY INFORMATION."**

2. Issues Raised by Commenters and Agency Assessment and Response

These elements are incorporated above in **"SUPPLEMENTARY INFORMATION."**

3. Significant Alternatives Minimizing Small-Entity Impact and Agency Response

The Small Business Administration defines a small financial institution as "a commercial bank or savings and loan association, the assets of which, for the preceding fiscal year, do not exceed $100 million." 13 CFR 121.13(a). Therefore, small entities to which the final rule applies include insured institutions which had assets totaling $100 million or less as of December 31, 1986, or 1,651 institutions. The final rule treats all institutions identically regardless of their size for the reasons discussed fully in **"SUPPLEMENTARY INFORMATION."** To do otherwise would be fundamentally inconsistent with the objectives of the rule. The requirements of the regulation are based upon the Board's determination, premised in economic theory and borne out by the losses experienced by the FSLIC, that investment in real estate, including high-ratio loans, and stocks and other equity investments pose a greater risk of loss to the FSLIC fund and the thrift industry than traditional thrift investments. The Board rejected the alternatives discussed above in the **"SUPPLEMENTARY INFORMATION"** for the reasons given therein.

List of Subjects in 12 CFR Part 563

Bank deposit insurance, Investments, Reporting and recordkeeping requirements, Savings and loan associations.

Accordingly, the Federal Home Loan Bank Board hereby amends Part 563, Subchapter D, Chapter V, and references contained in Chapter V, Title 12, Code of Federal Regulations, as set forth below.

CHAPTER V—FEDERAL HOME LOAN BANK BOARD

§§ 563.13, 563.13-2, 563.37 and 563.38 [Amended]

1. Chapter V is amended by removing the phrases "direct investment", "direct equity investment" or "direct real estate investment", whether used in the singular or plural, and by substituting in lieu thereof the phrase "equity risk investment" in the following sections: §§ 563.13; 563.13-2(a)(4), (e)(1)(i); 563.37(b); and 563.38(a).

SUBCHAPTER D—FEDERAL SAVINGS AND LOAN INSURANCE CORPORATION

PART 563—OPERATIONS

2. The authority citation for Part 563 continues to read as follows:

Authority: Sec. 1, 47 Stat. 725, as amended (12 U.S.C. 1421 *et seq.*); sec. 5A, 47 Stat. 727, as added by sec. 1, 64 Stat. 256, as amended (12 U.S.C. 1425a); sec. 5B, 47 Stat. 727, as added by sec. 4, 80 Stat. 824, as amended (12 U.S.C. 1425b); sec. 17, 47 Stat. 736, as amended (12 U.S.C. 1437); sec. 2, 48 Stat. 128, as amended (12 U.S.C. 1462); sec. 5, 48 Stat. 132, as amended (12 U.S.C. 1464); secs. 401-407, 48 Stat. 1255-1260, as amended (12 U.S.C. 1724-1730); sec. 408, 82 Stat. 5, as amended (12 U.S.C. 1730a); Reorg. Plan No. 3 of 1947, 12 FR 4981, 3 CFR, 1943-1948 Comp., p. 1071.

3. Amend § 563.9-8 by revising the heading of the section; by removing the phrase "direct investment" wherever it appears in the section and by substituting in lieu thereof the phrase "equity risk investment,"; and by revising paragraph (a) to read as follows:

§ 563.9-8 Regulation of equity risk investment in equity securities, real estate, service corporations, operating subsidiaries, certain land loans, and nonresidential construction loans.

(a) *Scope.* An insured institution, to the extent it has independent legal authority to do so, may make investments in equity securities, real estate, service corporations, operating subsidiaries, and certain land loans and nonresidential construction loans (collectively, "equity risk investments")

only in compliance with the provisions of this section.

* * * * *

4. Amend § 563.9–8 by revising the first clause preceding the proviso of paragraph (b)(1) to read as follows; by removing the word "and" after the semicolon at the end of paragraph (b)(6)(ii); by redesignating paragraph (b)(6)(iii) as paragraph (b)(6)(iv); by adding a new paragraph (b)(6)(iii) to read as follows; by redesignating paragraphs (b) (9), (10), and (11) as the new paragraphs (b) (10), (11), and (12); and by adding a new paragraph (b)(9) to read as follows:

* * * * *

(b) * * *

(1) "Aggregate equity risk investment" means the sum of investments in equity securities, real estate, service corporations, and operating subsidiaries: * * *

* * * * *

(6) * * * (iii) Land loans (as that term is defined in § 561.18 of this subchapter) and nonresidential construction loans (as that term is defined in § 561.19 of this subchapter) with loan-to-value ratios (as defined in paragraph (b)(9) of this section) greater than 80 percent, exclusive of loans for real property to be used primarily by the institution for offices or other related facilities; and

* * * * *

(9) "Loan-to-value ratio" means the ratio of the loan to the "market value" of the collateral; for purposes of this section, market value means the most probable price in terms of money that a property would bring in a competitive and open market under all conditions requisite to a fair sale, the buyer and seller each acting prudently and knowledgeably, and assuming the price is not affected by undue stimulus or special or creative financing or sales concessions granted by anyone associated with the sale, as set forth in an appraisal issued in conformance with the requirements of §§ 563.17–1 and 563.17–2 of this part.

* * * * *

5. Section 563.9–8 is amended by revising paragraphs (c)(2)(i) and (ii) to read as follows:

* * * * *

(c) *Threshold for aggregeate equity risk investment*—

(2) * * *

(i) With respect to an institution that is not subject to the limitations of paragraph (c)(2)(ii) or (c)(2)(iii) of this section and has tangible capital equal to or greater than 6 percent of "total liabilities" (as defined in § 563.13(b)(1)(i)), the applicable threshold is three times tangible capital, calculated as of the end of the immediate preceding calendar month.

(ii) With respect to an institution that meets its minimum capital requirements set forth in § 563.13 of this part and has tangible capital less than 6 percent of "total liabilities" (as defined in § 563.13(b)(1)(i)), the applicable threshold is the greater of (A) 3 percent of the institution's assets or (B) two and one-half times the institution's tangible capital calculated as of the end of the immediately preceding calendar month.

* * * * *

6. Amend § 563.9–8 by removing the word "No" contained in the first clause of paragraph (e)(1) and by adding to the beginning of paragraph (e)(1) the following new clause to read as follows; by revising paragraph (e)(2); and by adding a new paragraph (f)(3) to read as follows:

* * * * *

(e) *Diversification*—(1) *Equity Securities.* Except as provided in paragraphs (f) and (g) of this section, no * * *

(2) *Real Estate.* Except as provided in paragraphs (f) and (g) of this section, no insured institution shall at any time invest in any one real-estate project (including, but not limited to, acquisition, development, and carrying costs and assumption of any debt or liability in connection with such project) an aggregate amount greater in value than the amount permitted under the aggregate loans-to-one borrower limitation, as set forth in § 563.9–3(b)(1).

(f) *Savings clause.* * * *

(3) An institution whose aggregate actual or prospective equity risk investments on February 27, 1987 would not conform to the requirements of paragraph (e)(2) of this section (and are not "grandfathered" under paragraph (f)(1) or (2) of this section) shall not be prohibited solely for that reason from maintaining such investments or making investments to which it was legally committed on that date; nor shall an institution be required to divest any investments solely because of a subsequent change in its assets or its regulatory capital: *Provided,* That additional equity risk investments may be made only in compliance with the provisions of this section. Nothing in this paragraph (f), however, shall limit the authority otherwise granted to Principal Supervisory Agents to prohibit equity risk investments or to require the reduction of aggregate equity risk investment or the divestiture of specific equity risk investments.

* * * * *

7. Amend § 563.13 by removing the word "and" after the semicolon at the end of paragraph (b)(4)(ii)(D)(*2*)(*iii*); by redesignating existing paragraph (b)(4)(ii)(D)(*2*)(*iv*) as the new paragraph (b)(4)(ii)(D)(*2*)(*v*); by adding a new paragraph (b)(4)(ii)(D)(*2*)(*iv*) to read as follows; and by revising paragraphs (b)(4)(ii)(E)(*2*) and (b)(4)(ii)(F)(*2*) to read as follows:

§ 563.13 Regulatory capital requirement.

* * * * *

(b) * * *

(4) *Calculation of contingency component.* * * *

(ii) * * *

(D) * * *

(*2*) * * *

(*iv*) Land loans and nonresidential constructions loans with loan-to-value ratios exceeding 80 percent and either in portfolio on February 27, 1987, or to which an institution was legally committed on or before February 27, 1987; and

(E) * * *

(*2*) For purposes of paragraph (b)(4)(ii)(E)(*1*) of this section, "aggregate land loans made after June 30, 1986," means land loans made after that date, but does not include land loans in portfolio as of that date, or loans to which the institution was legally committed on or before that date, or high-ratio land loans made after February 27, 1987. High-ratio land loans "made after February 27, 1987" shall not include such loans in portfolio as of February 27, 1987 or to which the institution was legally committed on or before that date: *Provided,* That such loans were properly classified as loans.

(F) * * *

(*2*) For purposes of paragraph (b)(4)(ii)(F)(*1*) of this section, "aggregate nonresidential construction loans made after June 30, 1986," means nonresidential construction loans made after that date, but does not include nonresidential construction loans in portfolio as of that date, or nonresidential construction loans to which the institution was legally committed on or before that date, or high-ratio nonresidential construction loans made after February 27, 1987. High-ratio nonresidential construction loans "made after February 27, 1987" shall not include such loans in portfolio as of February 27, 1987 or to which the institution was legally committed on or before that date: *Provided,* That such loans were properly classified as loans;

* * * * *

By the Federal Home Loan Bank Board.
Jeff Sconyers,
Secretary.
[FR Doc. 87-14219 Filed 6-24-87; 8:45 am]
BILLING CODE 6701-01-M

DEPARTMENT OF HEALTH AND HUMAN SERVICES

Food and Drug Administration

21 CFR Part 177

[Docket No. 86F-0234]

Indirect Food Additives; Polymers

AGENCY: Food and Drug Administration.

ACTION: Final rule.

SUMMARY: The Food and Drug Administration (FDA) is amending the food additive regulations to provide for an increase in the maximum permitted level of residual *tert*-butyl alcohol in propylene homopolymer and high-propylene copolymers intended for use in contact with food. This action responds to a petition filed on behalf of the Ad Hoc *t*-Butanol Task Group of the Society of Plastics Industry, Inc.

DATES: Effective June 25, 1987; objections by July 27, 1987.

ADDRESS: Written objections to the Dockets Management Branch (HFA-305), Food and Drug Administration, Rm. 4-62, 5600 Fishers Lane, Rockville, MD 20857.

FOR FURTHER INFORMATION CONTACT: Marvin D. Mack, Center for Food Safety and Applied Nutrition (HFF-335), Food and Drug Administration, 200 C St. SW., Washington, DC 20204, 202-472-5690.

SUPPLEMENTARY INFORMATION: In a notice published in the **Federal Register** of June 24, 1986 (51 FR 22982), FDA announced that a petition (FAP 6B3934) had been filed on behalf of the Ad Hoc *t*-Butanol Task Group of the Society of Plastics Industry, Inc., c/o 1150 17th St. NW., Washington, DC 20036, proposing that § 177.1520 *Olefin polymers* (21 CFR 177.1520) be amended in paragraph (b) to increase the maximum permitted level of residual *tert*-butyl alcohol in propylene homopolymer and high-propylene copolymers intended for use in contact with food. The residual *tert*-butyl alcohol results from the use of 2,5-dimethyl-2,5-di(*tert*-butylperoxy)hexane as an optional adjuvant substance in these polymers.

FDA has evaluated data in the petition and other relevant material. The agency concludes that increase in the maximum permitted level of residual *tert*-butyl alcohol in propylene homopolymer and in certain high-propylene copolymers is safe, and that 21 CFR 177.1520(b) should be amended as set forth below. FDA has also made an editorial amendment in the regulation to remove the reference to § 177.1520(a)(1), which refers to polypropylene, and to replace it with a reference to the specifications that applies to polypropylene homopolymer. The agency made this amendment so that the entry for 2,5-dimethyl-2,5-di(*tert*-butylperoxy)hexane would describe its uses in a consistent fashion.

In accordance with § 171.1(h) (21 CFR 171.1(h)), the petition and the documents that FDA considered and relied upon in reaching its decision to approve the petition are available for inspection at the Center for Food Safety and Applied Nutrition (address above) by appointment with the information contact person listed above. As provided in 21 CFR 171.1(h), the agency will delete from the documents any materials that are not available for public disclosure before making the documents available for inspection.

The agency has carefully considered the potential environmental effects of this action and has concluded that the action will not have a significant impact on the human environment and that an environmental impact statement is not required. The agency's finding of no significant impact and the evidence supporting that finding, contained in an environmental assessment, may be seen in the Dockets Management Branch (address above) between 9 a.m. and 4 p.m., Monday through Friday. This action was considered under FDA's final rule implementing the National Environmental Policy Act (21 CFR Part 25).

Any person who will be adversely affected by this regulation may at any time on or before July 27, 1987, file with the Dockets Management Branch (address above) written objections thereto. Each objection shall be separately numbered, and each numbered objection shall specify with particularity the provisions of the regulation to which objection is made and the grounds for the objection. Each numbered objection on which a hearing is requested shall specifically so state. Failure to request a hearing for any particular objection shall constitute a waiver of the right to a hearing on that objection. Each numbered objection for which a hearing is requested shall include a detailed description and analysis of the specific factual information intended to be presented in support of the objection in the event that a hearing is held. Failure to include such a description and analysis for any particular objection shall constitute a waiver of the right to a hearing on the objection. Three copies of all documents shall be submitted and shall be identified with the docket number found in brackets in the heading of this document. Any objections received in response to the regulation may be seen in the Dockets Management Branch between 9 a.m. and 4 p.m., Monday through Friday.

List of Subjects in 21 CFR Part 177

Food additives, Food packaging.

Therefore, under the Federal Food, Drug, and Cosmetic Act and under authority delegated to the Commissioner of Food and Drugs and redelegated to the Center for Food Safety and Applied Nutrition, Part 177 is amended as follows:

PART 177—INDIRECT FOOD ADDITIVES: POLYMERS

1. The authority citation for 21 CFR Part 177 continues to read as follows:

Authority: Secs. 201(s), 409, 72 Stat. 1784-1788 as amended (21 U.S.C. 321(s), 348); 21 CFR 5.10 and 5.61.

2. In § 177.1520(b) by revising the entry for "2,5-Dimethyl-2,5-di(*tert*-butylperoxy)hexane" to read as follows:

§ 177.1520 Olefin polymers.

* * * * *

(b) * * *

Substances	Limitations
2,5-Dimethyl-2,5-di(*tert*-butylperoxy)hexane (CAS Reg. No. 78-63-7).	For use as an initiator in the production of propylene homopolymer complying with § 177.1520(c), item 1.1 and olefin copolymers complying with § 177.1520(c), items 3.1 and 3.2 and containing not less than 75 weight percent of polymer units derived from propylene, provided that the maximum concentration of *tert*-butyl alcohol in the polymer does not exceed 100 parts per million, as determined by a method titled "Determination of *tert*-Butyl Alcohol in Polypropylene," which is incorporated by reference. Copies are available from the Division of Food and Color Additives, Center for Food Safety and Applied Nutrition (HFF-330), Food and Drug Administration, 200 C St. SW., Washington, DC 20204, or available for inspection at the Office of the Federal Register, 1100 L St. NW., Washington, DC 20408.
* *	* *

Dated: June 11, 1987.

Richard J. Ronk,

Acting Director, Center for Food Safety and Applied Nutrition.

[FR Doc. 87-14386 Filed 6-24-87; 8:45 am]

BILLING CODE 4160-01-M

DEPARTMENT OF THE INTERIOR

Bureau of Indian Affairs

25 CFR Part 244

Wind River Reservation Game Code

AGENCY: Bureau of Indian Affairs, Interior.

ACTION: Final rule.

SUMMARY: This document finalizes the interim rule in 25 CFR Part 244 published on October 5, 1984 (49 FR 39309), which presented a game harvest strategy that was being implemented on an interim basis by the Bureau of Indian Affairs on the Wind River Reservation. United States Fish and Wildlife Service studies indicate that, unless a game code is adopted on the Wind River Indian Reservation, certain species of wildlife could be reduced to a point where normal propagation will not occur. This rule will conserve, protect and eventually increase the wildlife on the reservation.

EFFECTIVE DATE: This rule will become effective July 27, 1987.

FOR FURTHER INFORMATION CONTACT: Richard Lemaire, Fish and Wildlife Resources Specialist, Office of Trust and Economic Development, Bureau of Indian Affairs, 1951 Constitution Avenue, NW., Washington, DC 20245 telephone number (202) 343-4004.

SUPPLEMENTARY INFORMATION: The Wind River Reservation was originally granted to the Shoshone Tribe by the Fort Bridger Treaty of 1863. In 1878, the Arapahoe Tribe was temporarily placed on the Reservation. The temporary status gradualy became permanent and the Reservation is now shared by both tribes, *see Shoshone Tribe* v. *United States*, 299 U.S. 476 (1937). Each tribe has its own tribal council, and there is a joint business council of members from each tribe to conduct the business for the reservation as a whole.

The fact that each tribe has its own council and governs itself separately has contributed to the necessity of this game code. In 1980, the Shoshone Tribe approved a game code for the reservation, but the Arapahoe Tribe did not approve the code on the basis that it was too restrictive. In 1983, there was an extensive kill of big game animals on the reservation. Again, the Arapahoe Tribe refused to accept a game code for the reservation. In view of the request by the Shoshone Tribe and studies conducted by the U.S. Fish and Wildlife Service, Lander, Wyoming, the Bureau of Indian Affairs has determined that a game code is needed on the Wind River Indian Reservation. The U.S. Fish and Wildlife Service studies indicate that, unless a game code is adopted on the Wind River Indian Reservation, certain species of wildlife could be reduced to a point where normal propagation and recovery will not occur.

This rule includes a number of revised definitions, changes in the numbering of sections and section headings, and the following changes.

A raptor definition is added to mean a migratory bird of the Order *Falconiformes* or the Order *Strigiformes*, other than a bald eagle, (*Haliaeetus leucocephalus*) or a golden eagle (*Aquila chrysaetos*).

Small game includes squirrels.

Mourning dove are deleted from the definition of upland game bird and are added as a migratory game bird.

Under § 244.4 paragraph (b) is amended by adding the first sentence to read as follows: All hunting and trapping on the Wind River Indian Reservation is prohibited unless authorized by the Superintendent.

Section 244.5 heading is changed to read, "Open Areas and Fur-bearers."

Section 244.5(a)(1), (2), and (3) are deleted and a new paragraph 244.5(a) is added to read, The Superintendent and Area Director shall have the authority to close and/or open any or all parts of the Reservation to hunting in accordance with § 244.4 (b) and (c).

In § 244.5 (b) "shall" is changed to "may."

Section 244.5 (c) includes fur-bearers and establishes seasons and bag limits on the following fur-bearers: Mink, beaver, muskrat, weasel, and badger.

Section 244.6 is changed to read "Hunting."

A new § 244.6 (a) Upland Game Bird Hunting is added, "shall" is changed to "may."

A new § 244.6 (b) Big Game Hunting is added, "shall" is changed to "may."

A new § 244.6 (c) Waterfowl Hunting is added.

A new § 244.6 (d) Migratory Game Bird Hunting is added.

In § 244.7, all Endangered Species are protected from trapping, taking, harassing, or possessing. Peregrine falcon and grizzly bear are added to the list of endangered species noted in this section.

The title of § 244.8 is changed to "Protected species of birds, waterfowl, and raptors." The following acts are prohibited: Hunting, trapping, taking, harassing, or possessing. All species of the Order *Coraciiformes* and *Cuculiformes* are included in this section. Subsection (g) is deleted.

Section 244.9 has been revised.

In § 244.10, "peach officers" is changed to "law enforcement officers."

In § 244.11 (a), the Lacey Act Amendments of November 15, 1981, include 16 U.S.C. 3371 through 3378. Section 244.11 (b) has been revised.

In § 244.12, immediate family members that are not enrolled may accompany a properly permitted, enrolled member.

The wording of § 244.14 (c) has been changed to include an offer to barter and an offer to purchase blood antlers.

Section 244.14 (m) includes trapping for remuneration.

In § 244.15, a person must wear at least one fluorescent orange exterior garment.

Section 244.16 lists the legal hunting hours for wildlife, waterfowl, and migratory game birds.

Section 244.17 (c) on age restrictions has been clarified.

Section 244.18 (a)(1) includes a wildlife and vehicle inspection provision.

In § 244.18 (g)(1), the use of a fraudulently obtained permit is prohibited.

Section 244.19 includes the Civil Penalty provisions of 16 U.S.C. 3373(a).

Section 244.20 includes trapping.

In § 244.21 (c), "Federal lands" is changed to "Reservation lands."

Section 244.22 (d) is deleted.

Section 244.25 requires authorization from the Superintendent to collect birds for scientific purposes on the Reservation.

Section 244.26 prohibits the stunning or killing of any wildlife with narcotics, poisons, or other deleterious substances.

Section 244.26(o) prohibits falconry on the Reservation.

The Department of the Interior has determined that this document is not a major rule under Executive Order 12291. The economic effects will be relatively insignificant and essentially no detectable economic fluctuation will occur either on or outside the Reservation.

The Department of the Interior certifies that this document will not have a significant economic effect on a substantial number of small entities

under the Regulatory Flexibility Act (5 U.S.C. 601 *et seq.)*. No significant economic effect will occur to local businesses as a result of these regulations.

The information collection requirements contained in § 244.17 have been approved by the Office of Management and Budget as required by 44 U.S.C. 3501 *et seq.*, and have been assigned approval number 1076–0085.

The primary author of this document is Dave Pennington, Billings Area Office, Bureau of Indian Affairs, Billings, Montana, telephone number (406) 657–6325.

An environmental assessment of the Wind River Indian Reservation game code has been prepared which declares that the code is not a major Federal action and that it does not significantly affect the quality of the human environment. It does not require the preparation of an environmental impact statement under section 102(2)(c) of the National Environmental Policy Act of 1969, as amended (42 U.S.C. 4321–4347).

Written Comments Received

As of September 1, 1985, the Bureau had received seven comments on the interim rule and/or the draft environmental assessment. Two of the respondents are enrolled Shoshones. A third, unidentified respondent claimed to be enrolled in the Shoshone Tribe. These respondents questioned the need of an all inclusive game code and the possible effects it might have on individuals. One of the respondents also objected to the fee required for licenses and tags. A fourth respondent was the law firm representing the Arapahoe Tribe. This response questioned the authority of the Department of the Interior to promulgate a game code for the Reservation. Further, it pointed out several changes the firm wished to have made in a final game code should one be enacted. The Wyoming Game and Fish Department stated a willingness to aid the Tribes with restocking measures, but only if some type of game code were in effect. The Public Health Service stated that there are no documented cases of subsistence hunting on the Reservation and that several forms of Federal aid are available to needy Indian families and individuals. The Wyoming Chapter of the Wildlife Society stated that a Reservation game code would benefit both Indian and non-Indian people by protecting resources on the Reservation and providing additional protection for resident and migratory wildlife.

Bureau Response to Comments

The Bureau believes that only a comprehensive game code will adequately protect the wildlife resources on the Reservation for present and future generations of Shoshone and Arapahoe Indians. The game code would not prohibit hunting activities such as spring sage grouse hunts or either sex hunting if game population levels permitted such hunting. The fees assessed for hunting on the Reservation are far less than similar licenses for Wyoming residents off the Reservation. All fees will be used to offset the costs of printing and issuing licenses and tags, enforcing the game code, and improving wildlife resources on the Reservation.

Based on authorities cited and the decision of the *United States Court of Appeals in Northern Arapahoe Tribe v. Hodel*, 808 F.2d 741 (10th Cir. 1987), the Bureau is of the opinion it does have the authority to promulgate and enforce such a game code. The Bureau believes this game code is necessary to protect the wildlife resources of the Wind River Indian Reservation. Protection of wildlife resources on Indian lands held in trust by the Federal Government is a trust responsibility of the Bureau of Indian Affairs.

As pointed out by the Wyoming Chapter of the Wildlife Society, some species do move back and forth across jurisdictional boundaries. The game code will provide added protection for these animals. Without the game code, such animals could be harvested any time of the year even if only on the Reservation temporarily.

This final rule is published in exercise of authority delegated by the Secretary of the Interior to the Assistant Secretary—Indian Affairs by 209 DM 8.

List of Subjects in 25 CFR Part 244

Indian-lands, Hunting, Reporting and recordkeeping requirements, Wildlife.

Accordingly, subchapter J of Title 25 of the Code of Federal Regulations is amended by revising Part 244 to read as follows:

PART 244—WIND RIVER RESERVATION GAME CODE

Sec.
244.1 Purpose.
244.2 Information collection.
244.3 Definitions.
244.4 Administration and supervision.
244.5 Open areas and fur-bearers.
244.6 Hunting.
244.7 Endangered species.
244.8 Protected species of birds, waterfowl and raptors.
244.9 Trapping regulations.
244.10 Authorized enforcement officers.
244.11 Violations of game code.
244.12 Hunting by non-members prohibited.
244.13 Firearms restrictions.
244.14 Prohibited hunting procedures.
244.15 Hunters required to wear colored clothing.
244.16 Hunting hours.
244.17 Age restrictions.
244.18 Permit requirements, costs and procedures.
244.19 Civil penalties.
244.20 Tagging procedure for harvested big game and fur-bearing animals.
244.21 Restrictions on motor vehicle use, posting of notices and exceptions.
244.22 Interference with persons engaged in authorized activities.
244.23 False personation.
244.24 Expenditures of funds, source and functions.
244.25 Taking birds.
244.26 Other prohibited activities.

Authority: 43 U.S.C. 1457; 25 U.S.C. 2, 9; Reorganization Plan No. 3 of 1950 (64 Stat. 1262); 18 U.S.C. 1165; Lacey Act Amendments of November 16, 1981, 16 U.S.C. 3371 through 3378; Treaty of Ford Bridger, July 3, 1868 (15 Stat. 673); 5 U.S.C. 301.

§ 244.1 Purpose.

The purpose of these regulations is to ensure proper wildlife management and protection on the Wind River Indian Reservation while concurrently providing the opportunity for tribal members to utilize the wildlife resources. This game code will remain in full force and effect until such time that it is replaced by a code jointly adopted by the Shoshone and Arapahoe Tribes.

§ 244.2 Information collection.

The information collection requirements contained in § 244.17 have been approved by the Office of Management and Budget under 44 U.S.C. 3501 *et seq.*, and assigned clearance number 1076–0085. The information will be used to identify eligible participants in the hunting program. Response is mandatory for exercise of hunting privileges.

§ 244.3 Definitions.

As used in this Part:

"Aircraft" means any flying machine whether fixed-wing or helicopter.

"Antlered deer" means any antlered mule deer or whitetail deer, including deer with spikes.

"Any elk" means an elk of any age and of either sex.

"Area Director" means the Director of the Billings Area Office of the Bureau of Indian Affairs.

"Authorized Officer" means any law enforcement officer of the Department of the Interior, and any other person authorized by this Part to enforce these regulations.

"Bag limit" means the maximum limit, in number amount, of a particular species of wildlife, which may lawfully

be taken by one person in one day during an open season.

"Big game" means any one of the following species of animals: elk, mule deer, whitetail deer, bighorn sheep, moose, antelope, black and grizzly bear, and mountain lion.

"Buck antelope" means a male antelope with horns longer than his ear.

"Bureau" means Bureau of Indian Affairs (BIA).

"Carcass" means the dead body of an animal or parts thereof.

"Closed season" means the time and/or days during which wildlife may not be taken legally.

"Cross-country vehicles" means those vehicles designed or used to travel on the snow or across the terrain, including, but not limited to, snow cats, snowmobiles, all-terrain vehicles, four-wheel drive vehicles and dirt bikes.

"Drift fence" means the main North to South barbed wire fence constructed by the Civilian Conservation Corps (CCC) in 1936 to control livestock movement on the Wind River Indian Reservation.

"Falconry" means the taking of quarry by means of a trained raptor.

"Fur-bearing animals" means muskrat, beaver, mink, river otter, badger, marten, weasel, wolverine, fisher, lynx and bobcat.

"Harass" means to shoot at, disturb, worry, molest, rally, concentrate, harry, chase, drive, herd, or torment.

"Hunting" means to take any bird or animal by any means.

"License" means a written document granting authority to engage in specific activities covered in this code.

"Member" means any enrolled member of the Shoshone or Arapahoe Indian Tribes.

"Migratory game bird" include the mourning dove.

"Nongame animals" means all wild animals except big game, small game, fur-bearing animals, predatory animals, and aquatic wildlife.

"Nongame birds" means all birds except upland game birds and migratory game birds.

"Non-member" means any individual who is not enrolled in either the Shoshone or Arapahoe Tribes.

"Pollution of water" means the man-made or man-induced alteration of the chemical, physical, biological and or radiological integrity of water making it less desirable for the propagation of balanced indigenous populations of fish, and wildlife, and for recreation.

"Predatory animals" means foxes, skunks, coyotes and raccoons.

"Pre-sundance" means the designated period of time before the Sundance ceremony.

"Raptor" means a live migratory bird of the Order *Falconiformes* or the Order *Strigiformes*, other than a bald eagle (*Haliaeetus leucocephalus*) or golden eagle (*Aquila chrysaetos*).

"Reservation" means the Wind River Indian Reservation.

"Road" means any maintained road that has been used by the public.

"Scientific Collection Permit" means a special permit issued for the taking of wildlife specimens for scientific purposes.

"Small game" means any of the following species of mammals: Squirrels, cottontail rabbit, jack rabbit, snowshoe hare, marmot (rock chuck) and prairie dog.

"Snowmobile" means any motorized vehicle designated for travel on snow and/or ice and steered and supported in whole or in part by skis, belts, cleats, runners, or low pressure tires.

"Sundance" means the annual religious ceremony approved by the Arapahoe and Shoshone Tribal Councils.

"Superintendent" means the Superintendent of the Wind River Agency, Bureau of Indian Affairs.

"Tag" or "Big game tag" means an identification device issued for attachment to the carcass of big game animals.

"Take" or "Taking" means pursuing, shooting, shooting at, hunting, netting (including placing or setting any net or other capturing device), killing, capturing, snaring, or trapping wildlife, or attempting any of the foregoing.

"Trapping" means the taking of wildlife in any manner except with gun or implement in hand.

"Upland game bird" means any of the following species of birds: Sage grouse, blue grouse, ruffed grouse, hungarian (gray) partridge, chukar or pheasant.

"Waterfowl" means all species of ducks and geese (not including swans) of the Order *Anseriformes*.

"Wildlife" means any wild forms of birds and mammals including their nests and eggs.

"Wildlife area" means an area established by the Department of the Interior—BIA for special wildlife protection, research, or management practices.

§ 244.4 Administration and supervision.

(a) The Billings Area Office Director is authorized by the Assistant Secretary—Indian Affairs to be the official in charge of the game code. Local administration of the program is the responsibility of the Wind River Agency Superintendent.

(b) All hunting and trapping on the Wind River Reservation is prohibited unless authorized by the Superintendent. The Superintendent shall after consultation with the Tribes, establish the hunting season, define the hunting areas, set the permit fees and establish season limits for all wildlife hunting on or before June 1 of each year. Also, on or before June 1, the Area Director shall notify the Tribal Councils, in writing, and publish in a newspaper of local distribution, the explicit hunting program for that year, and the Superintendent shall post such hunting program on bulletin boards located at the Reservation Agency headquarters, Post Office and tribal headquarters.

(c) The Area Director is authorized to make pre-season and in-season adjustments to the hunting regulations to ensure protection of the wildlife resources. The Superintendent is responsible for having each in-season adjustment published in the local newspaper as a legal notice, and posting each such adjustment on bulletin boards located at the Reservation Agency headquarters, Post Office and tribal headquarters, at least twenty-four hours before it becomes effective.

§ 244.5 Open areas and fur-bearers.

(a) The Superintendent and Area Director shall have the authority to close and/or open any or all parts of the Reservation to hunting in accordance with § 244.4 (b) and (c).

(b) *Pre-Sundance deer and elk season.* The Superintendent may establish a season for male deer and male elk before the Sundance ceremony. Hunting doe, fawns, cows or calves shall be prohibited. Sundance ceremonial hunting participants must be verified by an elder of the Sundance prior to obtaining a permit from the Superintendent. Permittees must report harvest information to the Superintendent. (See § 244.18(e)(6) for reporting requirements.)

(c) *Predatory and Small game season and bag limit(s).* Hunting shall be open all year for predatory and small game animals. There is no bag limit for predatory and small game animals.

§ 244.6 Hunting.

(a) *Upland game bird hunting.* The Superintendent may establish hunting seasons, closed seasons, and bag limit(s) for upland game birds to include: Sage grouse, blue grouse, ruffed grove, hungarian (gray) partridge, chukar, pheasant, mourning dove and rock dove. Each hunter must obtain a proper permit from the Superintendent.

(b) *Big game hunting.* The Superintendent may establish hunting seasons, closed seasons and bag limit(s) for big game to include: Elk, mule deer,

whitetail deer, antelope, bighorn sheep, moose, black bear, and mountain lion. Each hunter must obtain proper permits and tags from the Superintendent.

(c) *Waterfowl hunting.* Hunting of waterfowl on the Reservation must comply with the rules and regulations promulgated under the Federal Migratory Bird Treaty Act. Each hunter must obtain the proper permit from the Superintendent.

§ 244.7 Endangered species.

The following list of species are Federally classified as endangered or threatened with extinction and are protected from all hunting, trapping, taking, harassment or possession on the Reservation:

(a) Bald eagle;
(b) Black-footed ferret;
(c) Gray wolf;
(d) Grizzly bear;
(e) Whooping crane; and
(f) Peregrine falcon

§ 244.8 Protected species of birds, waterfowl and raptors.

The following species of birds, waterfowl and raptors are protected from any hunting, trapping, taking, harassment or possession on the Reservation:

(a) Golden eagle;

(b) All species of hawks and falcons (Order *Falconiformes*);

(c) All species of owls (Order *Strigiformes*);

(d) Whistling and trumpeter swans (Order *Anseriformes*—Sub-family *Cygninae*);

(e) All species of migratory shorebirds, wading birds, and seabirds including loons, grebes, cormorants, herons, egrets, pelicans, cranes, curlews, plovers, avocets, phalaropes, sandpipers, gulls, and terns (Orders *Gaviiformes, Podicipediformes, Pelicaniformes, Ciconiiformes, Gruiformes* [Family *Gruidare*], and *Charadriiformes*); and

(f) All species of songbirds including woodpeckers, swallows, swifts, hummingbirds, nighthawks, kingfishers, jays, ravens, wrens, thrushes, chickadees, bluebirds, vireos, warblers, blackbirds and sparrows (Orders *Caprimulgiformes, Apodiformes, Piciformes,* and *Passeriformes*); and the Orders *Coracuformes* and *Cuculiformes.*

§ 244.9 Trapping regulations.

The Superintendent will establish the trapping season and closed trapping season each year and list the animals that can be trapped. Trapping will be allowed only in areas designated by the Superintendent. Each trapper must identify individual traps and snares with a metal tag bearing his/her name. Trappers must check traps at least every 72 hours. No trapper or person shall set any trap within 30 feet of any exposed bait visible to airborne raptors. Exposed bait means meat or viscera of any animal, bird or fish with or without skin, hide or feathers. The Superintendent shall designate which trapped animal needs a pelt tag and the Superintendent shall set the cost of the pelt tag.

§ 244.10 Authorized enforcement officers.

Department of the Interior Law Enforcement Officers and other officers designated by the Bureau shall have the authority and the duty to enforce the provisions of the game code, and shall be referred to in this code as "Authorized Officer."

§ 244.11 Violations of game code.

(a) Any person who violates any provision of this game code shall be subject to prosecution in Federal Court under applicable laws, e.g., 18 U.S.C. 1165 and the Lacey Act Amendments of November 16, 1981, 16 U.S.C. 3371–3378. Any member who has committed a violation of this code shall be subject to a fine of not more than $10,000, or to imprisonment of not more than one year, or to a combination of both fine and imprisonment per offense.

(b) Any wildlife, game, peltries, or parts thereof, taken in violation of the code shall be forfeited. Any firearms, vehicles, or equipment used in violation of this code may be confiscated as provided for under 16 U.S.C. 3374, as evidence. Disposal of forfeited items shall be at the discretion of the Superintendent.

§ 244.12 Hunting by non-members prohibited.

There shall be no hunting by persons other than enrolled members of the Shoshone and Arapahoe Tribes on any Indian land of the Reservation. Non-enrolled spouses of tribal members are not allowed to hunt. Immediate family (wife, husband, or children) may accompany an eligible enrolled tribal member who possesses the appropriate permits.

§ 244.13 Firearms restrictions.

For hunting big game, the use of firearms with a barrel bore diameter of less than .23 (23/100) of an inch, or chambered to fire a cartridge less than two inches in overall length, will not be allowed. Firearms for hunting upland game birds (excluding blue and ruffed grouse) and waterfowl are restricted to shotguns of 12 gauge or smaller. Ten gauge shotguns are allowed for goose hunting only. The use of fully automatic weapons or devices designed to silence or muffle the sound of any firearm for hunting any wildlife is prohibited.

§ 244.14 Prohibited hunting procedures.

The following hunting procedures are illegal and prohibited on the Reservation:

(a) *Hunting with aircraft or motor vehicle.* No person shall pursue, harass, hunt, shoot, or kill any wildlife with, from, or by use of aircraft or motorized vehicle (truck, automobile, motorcycle, all terrain vehicle or vehicle designed for travel over snow).

(b) *Use of artificial light.* No person shall hunt, pursue or kill any game mammal or bird, through the use of any artificial light or lighting device (including spotlights, and automobile, snowmobile, all terrain vehicle and motorcycle headlights).

(c) *Sale of game and blood antlers.* No person shall sell, offer for sale, barter, purchase, offer to purchase, or have in possession with intent to sell, any wildlife, blood antlers or any edible portion of any game animal or bird.

(d) *Wanton waste of game.* (1) No person who takes any upland game bird, waterfowl, or big game animal, shall abandon intentionally, or needlessly allow to go to waste, any portion thereof. The failure of any person to properly dress and care for any big game animal killed by that person, and, if the carcass is reasonably accessible, the failure to take or transport the carcass to the camp of that person and there properly care for the carcass within 48 hours after killing, is prima facie evidence of a violation (see § 244.11).

(2) No person shall abandon edible portions of a big game animal or game bird at a meat processing plant. The leaving of edible portions of a big game animal at a processing plant for more than 90 days shall be considered prima facie evidence of a violation. The owners or operator in charge of any meat processing plant shall immediately report the violation to the Superintendent. Notwithstanding any other provision of this code, the owner of the plant is entitled to all or a portion of the abandoned meat, or to the proceeds for sale by ruling of Federal Court of any meat abandoned, up to the amount of reasonable processing and storage charges following a conviction, or within a reasonable time after the violation is reported.

(e) *Shooting from or across roads.* No person shall fire any firearm from, upon, along or across any public road or highway.

(f) *Hunting big game with dogs.* No person shall use dogs to track, chase,

kill, or in any other way hunt big game animals. Dogs so used or observed harassing big game animals may be shot by enforcement officers to protect big game animals.

(g) *Use of poisons.* The use of any poisons to take any wildlife is prohibited.

(h) *Unlawful possession of wildlife.* It shall be unlawful to possess any wildlife or parts thereof unless it can be shown by the possessor that he or she has the required license and/or tags or other express written authorization by the BIA to hunt or take such animal, or that the animal was given to the possessor by a licensed hunter or trapper.

(i) Hunting with firearm while intoxicated or under influence of a controlled substance.

(1) It shall be unlawful for any person intoxicated or under influence of a controlled substance to carry a loaded firearm, or to take, harass or molest any wildlife.

(2) It shall be unlawful for any person to handle or discharge a firearm in a careless or reckless manner or with wanton disregard for the safety of human life and property.

(j) *Aiding in concealment of wildlife unlawfully taken or possessed.* No person shall knowingly aid or assist in the concealment of any wildlife that has been unlawfully taken or is unlawfully possessed.

(k)(1) No person shall hunt, trap or discharge firearms upon the private property of another without knowledge and consent of the property owner.

(2) No person shall hunt or discharge firearms within 200 yards of an occupied building, whether on privately-owned or tribal land, without the consent of the person(s) occupying such building.

(l) *Destruction of private or public property.* No person shall deface, shoot at, or destroy public or private property, including signs, fences, livestock or improvements.

(m) *Hiring to hunt or trap for remuneration.* No person shall hire another person to hunt game for him or her, nor shall any person hunt or trap wildlife for another in return for payment of goods, services, or money.

§ 244.15 Hunters required to wear colored clothing.

No person shall hunt any big game animal without wearing, in a visible manner, exterior garments of a fluorescent orange color, which shall include one of the following: A hat, shirt, vest, jacket, coat, sweater or other upper body garment.

§ 244.16 Hunting Hours.

No person shall pursue, shoot, kill or attempt to take any wildlife, except waterfowl and migratory game birds, between ½ hour after sunset of one day and ½ hour before sunrise of the next day. No person shall pursue, shoot, kill or attempt to take any waterfowl between sunset of one day and sunrise of the next day.

§ 244.17 Age restrictions.

The following age restrictions shall apply for hunting on Indian lands on the Reservation:

(a) The minimum age to take any big game animal is 14 years.

(b) No person under 12 years of age may take any game bird, small game, waterfowl or predator unless accompanied by an adult.

(c) Non-enrolled children from the ages 14 to 16 of enrolled members may take big game and from the ages of 12 to 16 may take any game bird, small game, waterfowl or predator. At age 16, non-enrolled children lose all tribal hunting and trapping rights.

§ 244.18 Permit requirements, costs and procedures.

The following permit program will be implemented for qualified persons to hunt on Indian lands on the Reservation:

(a) *Requirements.* (1) No person shall be allowed to take, or attempt to take, any wildlife without a proper permit and tags (see § 244.19) in their possession. Also, no person taking, or attempting to take, wildlife on the Reservation shall fail or refuse to exhibit their permit(s) and allow inspection of any wildlife to an authorized officer who has reasonable cause to believe the person is engaged in unauthorized hunting or trapping activities. No such person shall refuse to permit inspection and count of game. Any motor vehicle, camper, trailer or camp may be stopped and/or searched for such inspection and count.

(2) State of Wyoming hunting licenses shall not be required for enrolled tribal members hunting on Indian lands of the Reservations.

(b) *Permit costs.* Permit fees for hunting on Indian lands of the Reservation will be established annually and published by the Superintendent and will be used for the purposes of administering this game code.

(c) *Procedures.* (1) Permits (licenses) shall be issued in the name of the Department of the Interior—BIA. Each permit shall be signed by the permittee in ink on the face thereof. Any permit not signed is invalid. With each permit authorizing the taking of wildlife, the Bureau shall provide such tags as required. Tags shall be attached in a manner prescribed by the Superintendent.

(2) It shall be unlawful for any person to obtain and sign, as a permittee in any one permit year, more than one tag for the taking of each authorized big game species.

(3) The Bureau may issue a duplicate permit, provided that the person requesting such duplicate permit furnishes the information deemed necessary. A fee of $2.00 shall be collected for each duplicate permit issued.

(d) *Permit conditions required.* All persons to whom permits are issued by the Bureau shall be required to sign permit conditions before any such permit shall be valid. The permit conditions shall be in the form provided by § 224.17(e). The permit conditions shall be signed by the applicant in the presence of the person issuing the permit.

(e) *Permit conditions.* Permit conditions shall be printed on the back of all permits and shall take the following form:

(1) I hereby agree as consideration for the granting of this permit, that the following terms and conditions govern my use of the permits.

(2) I agree to obey all Federal laws and regulations.

(3) I consent to the absolute and exclusive jurisdiction of Federal Court for any disputes arising from my use of resources administered by the Federal Government.

(4) I understand that taking of wildlife on the Wind River Indian Reservation is conditioned on my obedience to Federal laws and regulations and that violation of such laws and regulations make me subject to arrest, Federal court action, loss of present and future permits and seizure of property as security for payment of potential financial obligations to the Department of the Interior.

(5) I understand that willfully using wildlife resources contrary to the terms of Federal law of regulation, constitutes theft of a Federal asset and is a violation of Federal law.

(6) I agree to return all unused tags within 20 days after close of the season. For each tag used to tag a harvested animal, the following information must be provided to the Superintendent no later than 20 days after the close of the big game season:

(i) Species of animal killed;

(ii) Sex of animal killed;

(iii) If a deer or elk, list number of points, or if a spike;

(iv) Date animal was killed;

(v) Approximate location of kill;

(7) For each tag a hunter does not return or for which the above harvest information is not provided, either in person or by mail, to the Superintendent within the allotted time frame, loss of hunting privileges for one or more big game seasons, will result. This information is needed to obtain a profile of the big game harvest to aid in setting future seasons and properly manage big game on the Reservation.

(8) The front of the permit form shall contain the following words, "I have read and hereby agree to abide by the Wind River Indian Reservation game code and Permit conditions as stated on the reverse. This permit is not valid unless signed in ink in the presence of designated official."

(f) *Revocation and denial of right to obtain permit:* Notice. In addition to or as an alternative to pursuing the other remedies provided by this code, the Superintendent, after notice, may suspend or revoke, for a period not to exceed five years, the permit and privilege to take wildlife of any person who:

(1) Unlawfully takes or possesses wildlife;

(2) Carelessly uses a firearm or other weapon;

(3) Destroys, injures, or molests livestock, or damages or destroys crops, personal property, notices, signboards, or other improvements while taking wildlife;

(4) Before any such suspension or revocation, the Superintendent shall notify the person whose privileges may be suspended to appear and show cause why they should not be suspended; and

(5) The Superintendent shall maintain the names and addresses of persons whose permits have been revoked or suspended, and periods for which they have been denied the right to secure permits.

(g) *Obtaining a permit by fraud or misrepresentation.* (1) No person shall, by fraud or misrepresentation, obtain or use a permit to take wildlife, and any permit thus obtained is null and void from the date of issuance thereof.

(2) It shall be unlawful for any person to issue a permit of any kind to a person whose privilege to obtain that permit has been suspended or revoked. Any permit issued to a person whose privilege to have that permit has been revoked or suspended, shall be void.

(h) *Transportation permits.* A person may transport big game legally taken by another person provided that the big game has attached to it a permit for the taking of that game endorsed by the person who took it.

(1) Wildlife shall be transported in such a manner that it may be inspected by authorized persons upon demand until the wildlife is processed.

(2) No person shall possess more than one bag or possession limit of any species of wildlife, except for the purpose of transportation.

(3) The Superintendent can be contacted for information on transporting game off the Reservation.

§ 244.19 Civil penalties.

In addition to or as an alternative to pursuing the other remedies provided by this code, violators shall be subject to the Civil Penalty provisions of 16 U.S.C. 3142(g) and 16 U.S.C. 3373(a). The rules and procedures for the assessment of civil penalties and forfeitures included in 50 CFR Parts 11 and 12 including the appeal procedures of 50 CFR 11.25 shall be followed by the Superintendent in referring cases to the Office of the Solicitor, Department of the Interior.

§ 244.20 Tagging procedure for harvested big game and fur-bearing animals.

(a) Tags are required for hunting big game and trapping fur-bearing animals on the Reservation. The Superintendent shall publish a list on or before June 1 of the animals that can be hunted or trapped with required tags.

(b) Upon application for a big game permit, tags will be issued for each species for which a permit is issued. Each tag shall bear the permittee's big game permit number and name of the species for which it is issued. Tags are not transferable. Evidence of sex must remain attached to the carcass in the field and during transportation. Big game tags shall be carried by the permittee at all times while hunting. No big game animal shall be transported, stored, or possessed unless the tag has been securely attached.

§ 244.21 Restrictions on motor vehicle use, posting of notices and exceptions.

(a) *Motor vehicle use.* When the Superintendent determines that the operation of motor vehicles within a certain area is or may be damaging to wildlife reproduction, wildlife management, wildlife habitat, or special studies, the Superintendent may post notices closing the area (s) to motor vehicles for a designated period of time, Provided that: All roads in the area shall remain open, unless specifically closed.

(b) *Notices of restrictions, posting and publication.* For all areas specified pursuant to § 244.21(a), the Superintendent shall cause notice of the restrictions, prohibitions or permitted uses of such area to be posted, prior to the effective date of such changes in use, on the main roads and highways entering such area and at such locations as the Area Director deems appropriate. In addition to the posted notices required by § 244.21(a), the Superintendent shall cause a notice of such restrictions, prohibitions, or permitted uses, together with a description of the area, to be published in the local newspaper prior to the effective date of such changes in use.

(c) *Roadless area.* In compliance with 25 CFR Part 265, no person shall drive any motor-operated vehicle in the designated Wind River Roadless Area. Also, it is illegal to operate any motor-operated vehicle cross-country on Reservation lands where cross-country driving is prohibited.

§ 244.22 Interference with persons engaged in authorized activities.

Disturbing, molesting or interfering with any employee of the United States or of any local or state government employee enaged in official business, or with any private person engaged in the pursuit of an authorized activity on the Reservation is prohibited.

§ 244.23 False personation.

(a) Whoever falsely assumes or pretends to be an officer or employee acting under the authority of the United States or any department, agency or office thereof, and acts as such, or in such pretended character demands or obtains any money, paper, document or thing of value, shall be fined not more than $1,000 nor imprisoned for more than three years, or both.

(b) Whoever falsely represents himself/herself to be an officer, agent, or employee of the United States, and in such assumed character arrests or detains any person or in any manner searches the person, buildings or other property of any person, shall be fined not more than $1,000 nor imprisoned for more than three years, or both.

§ 244.24 Expenditures of funds, source and functions.

The Area Director and Superintendent may expend such funds as may become available from funds appropriated to carry out the provisions of this game code, including, but not limited to, expenditures for:

(a) Investigations and surveys of actual or possible wildlife habitat damage by motor vehicles and the study of areas to be recommended for cross-country vehicle use.

(b) Posting notices of restrictions, prohibitions and permitted uses of motor vehicles.

(c) Providing maps.

(d) An information and education program on wildlife habitat preservation and restoration.

(e) The enforcement of the provisions of this game code or any rule or regulation adopted pursuant to this code.

§ 244.25 Taking birds.

No person shall take or injure any bird or harass any bird upon its nest, or remove the nest or eggs of any bird, except as may occur in normal horticultural, wildlife research and agricultural practices and as may be authorized by the Area Director. Nothing in this code shall be construed to prohibit the taking of such birds for scientific purposes with the authorization from the Superintendent of the Reservation.

§ 244.26 Other prohibited activities.

Except as otherwise provided by this code, in addition to all other activities prohibited, while hunting, by this code, it shall be unlawful for any person to:

(a) Destroy or deface signs, tables, improvements, crops, or personal or real property;

(b) Destroy, remove, injure or cut any green tree on the Reservation without written BIA authorization;

(c) Cut, damage, or destroy any fence on the Reservation;

(d) Hunt big game on the Reservation without a valid permit in possession;

(e) Take big game in excess of the number permitted by Bureau regulations or hunt big game during a period of the year not permitted by Bureau regulations;

(f) Hunt big game, in any manner or place, not permitted by Bureau regulations;

(g) Enter upon land closed to entry while hunting, fishing, camping, or hiking or while travelling on the Reservation;

(h) Detach or remove, or attempt to detach or remove from the carcass of a big game animal, a portion thereof for the purpose of misrepresenting or concealing the species or sex of the animal;

(i) Use any explosive compound or corrosive, narcotic, poison or other deleterious substance for the purpose of taking, stunning, or killing, any wildlife unless acting as an approved agent of the Superintendent;

(j) Take, possess, transport, buy, sell or offer for sale any migratory bird taken on the Reservation, except as permitted by this code or other Federal regulations;

(k) Carry, transport, or possess devices for taking game within or upon a game refuge, except as permited by this code or other Federal regulations;

(l) Enter any special use area of the Reservation without a proper Special Use Permit;

(m) Disobey a lawful order of any authorized officer; or

(n) Cross-country ski, snowmobile, sled, tube or toboggan in key wildlife winter critical habitat areas closed to such activities upon public notice from the Superintendent;

(o) Falconry is prohibited on the Reservation.

Ross O. Swimmer,

Assistant Secretary—Indian Affairs.

[FRDoc. 87-14291 Filed 6-24-87; 8:45 am]

BILLING CODE 4310-02-M

EQUAL EMPLOYMENT OPPORTUNITY COMMISSION

29 CFR Part 1625

Age Discrimination in Employment

AGENCY: Equal Employment Opportunity Commission.

ACTION: Final rule.

SUMMARY: All age discrimination enforcement functions pursuant to the Age Discrimination in Employment Act of 1967 (ADEA), as amended, 29 U.S.C. 621 *et seq.*, were transferred to the Equal Employment Opportunity Commission from the Department of Labor by Reorganization Plan No. 1 of 1978, 43 FR 19807, May 9, 1978 (effective July 1, 1979).

This document transfers those interpretations issued by the Department of Labor's Wage and Hour Division in 29 CFR 860.120 to EEOC's chapter of Title 29 § 1625.10 and updates cross-references in Part 1625 to reflect the transfer of regulations. This is a technical change to conform to the Federal Register Act, 44 U.S.C. 1501 *et seq.*, and does not involve any substantive changes in the interpretations involved.

EFFECTIVE DATE: June 25, 1987.

FOR FURTHER INFORMATION CONTACT: John K. Light, Office of Legal Counsel, Room 214, EEOC, 2401 E Street, NW., Washington, DC 20507, (202) 634-9092.

SUPPLEMENTARY INFORMATION: Pursuant to Reorganization Plan No. 1 of 1978, responsibility and authority for enforcement of the Age Discrimination in Employment Act of 1967 (ADEA) was transferred from the Department of Labor to the Equal Employment Opportunity Commission. The transfer became effective and the Commission assumed enforcement of the Act on July 1, 1979.

This document transfers those interpretations issued by the Department of Labor's Wage and Hour Division in 29 CFR 860.120, to EEOC's chapter of Title 29 at § 1625.10 and updates cross-references in Part 1625 to reflect the transfer of regulations. Although the Commission has not adopted the DOL interpretations as formal Commission regulations, the DOL interpretations were continued in effect by the Commission pending review. (See 44 FR 37974; June 29, 1979).

This technical action is being taken because the Federal Register Act (44 U.S.C. 1501 *et seq.*) requires that the Code of Federal Regulations consist of "complete codifications of the documents of each agency of the Government having general applicability and legal effect, issued or promulgated by the agency. . . ." Pursuant to this authority the Office of the Federal Register has requested that the EEOC transfer and redesignate DOL's interpretations at 29 CFR 860.120, now utilized by reference, into the EEOC portions of the CFR.

Pursuant to court order, § 860.120(f)(1)(iv)(B) was rescinded at 52 FR 8448, March 18, 1987. Accordingly, that portion of § 860.120 will not be included with the interpretations to be republished at Title 29 § 1625.10.

The remaining portions of § 860.120 are being transferred to § 1625.10.

List of Subjects in 29 CFR Part 1625

Advertising, Aged, Employee benefit plans, Equal employment opportunity, Retirement.

PART 1625—[AMENDED]

For the reasons set out in the preamble, Title 29 of the Code of Federal Regulations is amended as follows:

1. The authority citation for Part 1625 continues to read as follows:

Authority: 81 Stat. 602; 29 U.S.C. 621, 5 U.S.C. 301, Secretary's Order No. 10-68; Secretary's Order No. 11-68, sec. 2; Reorg. Plan No. 1 of 1978, 43 FR 19807.

§ 1625.9 [Amended]

2. Section 1625.9 is amended by:

a. In paragraph (a)(1), after the second sentence, the reference to "29 CFR 860.110(a)," is removed.

b. In paragraph (d)(2), the reference to "§ 860.120(b), as amended, 44 FR 30658 (May 25, 1979)" is revised to read "§ 1625.10(b) of this part."

§ 1625.10 [Removed]

§ 860.120 [Redesignated as § 1625.10]

3. Section 1625.10 is removed and a new § 1625.10 is transferred and redesignated from § 860.120.

4. The newly transferred and redesignated § 1625.10 is amended by:

a. In paragraph (a)(1), the last sentence of the paragraph is removed.

b. In paragraph (d)(2)(i), in the last sentence, the reference to "§ 860.120(f)(1) of this section" is revised to read "paragraph (f)(1) of this section."

c. In paragraph (d)(2)(ii), in the last sentence, the reference to "§ 860.120(f)" is revised to read "paragraph (f) of this section."

Signed at Washington, DC this 18th day of June, 1987.

For the Commission.

Clarence Thomas,

Chairman.

[FR Doc. 87-14340 Filed 6-24-87; 8:45 am]

BILLING CODE 6570-06-M

DEPARTMENT OF LABOR

Wage and Hour Division

29 CFR Part 860

Age Discrimination in Employment

AGENCY: Wage and Hour Division, Labor.

ACTION: Final rule; removal of regulation.

SUMMARY: All age discrimination administration and enforcement functions pursuant to the Age Discrimination in Employment Act of 1967, as amended (29 U.S.C. 621 *et seq.*) (ADEA) were transferred to the Equal Employment Opportunity Commission (EEOC) from the Department of Labor by Reorganization Plan No. 1 of 1978, 43 FR 19807, May 9, 1978. On September 29, 1981, the EEOC published final regulations under the ADEA at 29 CFR Part 1625, thereby rendering obsolete and of no legal effect 29 CFR Part 860, except for § 860.120. See 29 CFR 1625.10. The EEOC has now redesignated the provisions of § 860.120 of Title 29 within Part 1625. Therefore, Part 860 is being removed from the CFR.

EFFECTIVE DATE: June 25, 1987, except for the removal of § 860.120(f)(1)(iv)(B) which was effective March 18, 1987.

FOR FURTHER INFORMATION CONTACT: Paula V. Smith, Administrator, Wage and Hour Division, U.S. Department of Labor, Room S-3502, 200 Constitution Avenue NW., Washington, DC 20210, (202) 523-8305. This is not a toll free number.

SUPPLEMENTARY INFORMATION: Pursuant to the Age Discrimination in Employment Act Amendments of 1978 (29 U.S.C. 621 *et seq.*), responsibility and authority for enforcement of the Age Discrimination in Employment Act of 1967 was transferred from the Department of Labor (DOL) to the Equal Employment Opportunity Commission (EEOC). All functions vested in the Secretary of Labor were transferred to the EEOC by Reorganization Plan No. 1 of 1978, 43 FR 19807 (May 9, 1978), and Executive Order No. 12144, 44 FR 37193 (June 26, 1979) on July 1, 1979. On September 29, 1981, the EEOC published final regulations under the ADEA at 29 CFR Part 1625, thereby rendering obsolete and of no legal effect 29 CFR Part 860, except for § 860.120. See 29 CFR 1625.10.

The EEOC has now redesignated the provisions of § 860.120 of Title 29 within Part 1625. See the EEOC document published elsewhere in this issue of the **Federal Register.**

Accordingly, 29 CFR Part 860 has now been rendered obsolete and of no legal effect, and is being removed from the CFR.

Pursuant to court order, § 860.120(f)(1)(iv)(B) was rescinded at 52 FR 8448, March 18, 1987. Since employers and others may no longer rely on the rules codified at 29 CFR 860.120(f)(1)(iv)(B), the Wage and Hour Division confirms their removal.

Regulatory Impact

This document reflects the removal of regulations for which there is no current statutory or other legal authority. Therefore this document does not constitute a rule or regulation as defined in Executive Order No. 12291. In addition, this document was not preceded by a general notice of proposed rulemaking, and is not a rule as defined in the Regulatory Flexibility Act, 5 U.S.C. 601(2) and 604(a).

List of Subjects in 29 CFR Part 860

Aged, Employee benefit plans, Equal employment opportunity, Retirement.

For the reasons set out in the preamble, Title 29 of the Code of Federal Regulations is amended as follows:

§ 860.120 [Amended]

1. The removal of § 860.120(f)(1)(iv)(B) is confirmed.

PART 860—[REMOVED]

2. Part 860 is removed.

3. In Chapter V, the heading "Subchapter C-Age Discrimination in Employment" is removed, and Subchapter C is reserved.

Signed at Washington, DC, this 22nd day of June 1987.

William E. Brock,

Secretary of Labor.

[FR Doc. 87-14443 Filed 6-24-87; 8:45 am]

BILLING CODE 4510-23-M

DEPARTMENT OF THE INTERIOR

Minerals Management Service

30 CFR Part 218

Payments by Electronic Funds Transfer

AGENCY: Minerals Management Service (MMS), Interior.

ACTION: Final rule.

SUMMARY: The Minerals Management Service (MMS) is amending 30 CFR Part 218 to lower the threshold from $50,000 to $10,000 for royalty payments required to be made by Electronic Funds Transfer (EFT) using the Federal Reserve Communications System link to the Treasury Financial Communication System (TFCS). The final rule also extends the new EFT requirement to include deferred bonus payments from successful bidders in competitive lease sales. This action would accelerate the collection and deposit processing of payments currently received by MMS in the form of checks and allow the Government to have the time value of that money earlier.

EFFECTIVE DATE: July 27, 1987.

FOR FURTHER INFORMATION CONTACT: Dennis C. Whitcomb, Chief, Rules and Procedures Branch, Minerals Management Service, P.O. Box 25165, MS 628, Building 85, Denver Federal Center, Denver, Colorado 80225, telephone: (303) 231-3432, FTS 326-3432.

SUPPLEMENTARY INFORMATION: The principal author of this final rulemaking is David Menard of MMS in Lakewood, Colorado.

I. Summary of Rule Adopted

On January 8, 1987, the MMS published a Notice of Proposed Rulemaking in the **Federal Register** [52 FR 687] to amend regulations at 30 CFR Part 218 covering payments by EFT. The amendments being adopted are substantially the same as the proposed amendments. Therefore, much of the discussion in the preamble to the proposed amendments applies to the final amendments. Based on comments received from the public on the proposed amendments, certain changes were made. These changes are

discussed below in Section II, Comments Received on Proposed Rule.

The final rule amends provisions of Part 218 to lower the threshold from $50,000 to $10,000 for royalty payments required to be made by EFT, extends the EFT requirements to include deferred bonus payments from successful bidders in competitive lease sales, and revises the references on payment method in Part 218 to be consistent with the amendment.

The new requirements of the adopted amendments will be phased in. After the effective date of the final rule, which is identified above, the requirements will apply to the next payment due for royalties or deferred bonuses from all payors who are currently submitting royalty payments by EFT. With respect to payors who have not previously used EFT, payments to MMS by EFT will be required only after the payor has received written instructions from the MMS Royalty Management Accounting Center in Lakewood, Colorado.

II. Comments Received on Proposed Rule

The proposed rulemaking provided for a 60-day public comment period which ended March 9, 1987. Two comments were received during that time period and are addressed in this section. The text of the adopted regulation has been changed to reflect comments as appropriate.

One commenter expressed concern that the new regulation will impose an unreasonable burden on smaller payors. In the commenter's opinion, it is unfair to lower the EFT threshold to $10,000 to let the Government have the time value of that money earlier and also continue the policy of not incurring interest liability to payors in the event overpayments are made or where advance payments are held by the Government. The commenter stated further that because there is no requirement that the payor receive its payments from the purchaser by EFT, it is often a burden for them to find the cash to make an instantaneous EFT payment to MMS. The commenter also noted that the payor must bear the additional expense of the bank fees for arranging the EFT.

The MMS disagrees that the new requirement is an unreasonable burden. Absent specific statutory or contractual authority, the Government cannot pay interest to payors for overpayments or on advance payments. Also, the Government has no control over payments by purchasers to the payor. The lessee or designated payor has an obligation to submit its payment(s) to MMS by the designated due date. The new requirement assures that the money is actually received when due rather than several days later after the check has cleared the payor's bank. With respect to bank fees, an analysis performed by MMS, based on inquiries to various banks throughout the country, shows that the cost of an EFT ranged from $7.50 to $20.00 for a single message. This expense will be offset in some degree by the payors not having to issue checks. As stated in Section III of this preamble, Procedural Matters, the Department of the Interior has determined that because there is not an increase in the amount of payment due, there is not a significant economic effect on a substantial number of small entities.

The same commenter expressed concern over possible future extension of the EFT requirement to rental payments. The commenter thought that the lessee might place the lease in jeopardy because of possible problems with the TFCS.

The MMS does not require or contemplate requiring payors to submit rentals by EFT but is willing to work with those payors who want to use EFT for timely rental payments. Our use of the TFCS has shown it to be a reliable and efficient payment receipt system.

One commenter noted that the proposed rule did not address the method for payments of audit claims, interest, or penalty assessments. The commenter stated that it is currently paying those items by check but would not object to using the EFT for such payments.

The MMS agrees and has revised the adopted rule to specify the method for payment of audit claims, interest, or penalty assessments. Section 218.51(a)(1) and (3) were revised to include payments of Bills for Royalty-in-Kind Oil and Bills for Collection of additional royalties owed as the result of audit findings. Proposed § 218.51 (d) and (e) were redesignated in the adopted rule as § 218.51 (e) and (f), respectively. A new paragraph (d) was included to cover payment of interest and penalty assessments. Although the adopted rule gives the payor a choice of payment methods for paying interest or penalty assessments, MMS encourages established EFT payors to make payment of interest or penalty assessments by EFT.

One commenter suggested that proposed § 218.51(a) be clarified to specify that the threshold applies only to royalty payments and not to rental payments. The MMS agrees and included the recommended changes in the adopted rule.

One commenter questioned the use of the phrase in § 218.100(a) and § 218.150(a) which states in part "* * * should pay in value or deliver in production all royalties in the amounts *of* value *or* production * * *." (italic added).

The MMS disagrees with the recommended language change (switching of words *of* and *or*), because the phrase is intended to include "amounts of production" if royalty oil is taken "in kind," as opposed to "in value."

III. Procedural Matters

Executive Order 12291 and Regulatory Flexibility Act

The final rule does not increase the amount of payment due. Therefore, the Department of the Interior has determined that this document is not a major rule under E.O. 12291 and certifies that this document will not have a significant economic effect on a substantial number of small entities under the Regulatory Flexiblity Act (5 U.S.C. 601 *et seq.*).

Paperwork Reduction Act of 1980

This rule does not contain information collection requirements that require approval by the Office of Management and Budget under 44 U.S.C. 3501 *et seq.*

National Environmental Policy Act of 1969

The Department of the Interior has determined that this action does not constitute a major Federal action significantly affecting the quality of the human environment. Therefore, an environmental impact statement is not required under the National Environmental Policy Act of 1969.

(42 U.S.C. 4332(2)(C))

List of Subjects in 30 CFR Part 218

Coal, Continental shelf, Electronic funds transfers, Geothermal energy, Government contracts, Indian lands, Minerals royalties, Oil and gas exploration, Public lands-mineral resources.

Dated: May 29, 1987.

J. Steven Griles,

Assistant Secretary, Land and Minerals Management.

For the reasons set out in the preamble, Title 30, Subchapter A of the Code of Federal Regulations is amended as set forth below:

SUBCHAPTER A—ROYALTY MANAGEMENT

PART 218—[AMENDED]

1. The authority citation for Part 218 continues to read as follows:

Authority: 25 U.S.C. 396 *et seq.*; 25 U.S.C. 396a *et seq.*; 25 U.S.C. 2101 *et seq.*; 30 U.S.C. 181 *et seq.*, 30 U.S.C. 351 *et seq.*; 30 U.S.C. 1001 *et seq.*; 30 U.S.C. 1701 *et seq.*; 43 U.S.C. 1301 *et seq.*; 43 U.S.C. 1331 *et seq.*; and 43 U.S.C. 1801 *et seq.*

2. Section 218.51 is revised to read as follows:

§ 218.51 Method of payment.

(a) *Payment of royalties.* (1) All payors whose aggregate royalty payment obligation to MMS on the payment due date totals $10,000 or more must make royalty payment by Electronic Funds Transfer (EFT) using the Federal Reserve Communications System (FRCS) link to the Treasury Financial Communications System (TFCS), unless otherwise directed by MMS. Bills for Royalty-In-Kind (RIK) Oil and Bills for Collection of additional royalties owed as the result of audits are considered to be royalty payment obligations subject to the requirements of this paragraph. Early payment by other than EFT of a portion of the aggregate royalty payment obligation to avoid remittance by EFT on the payment due date is not permitted. Such early payments are permitted regardless of amount, but msut be remitted by EFT.

(2) Payors who have not submitted royalty payments to MMS by EFT prior to July 27, 1987, shall begin using EFT only after receipt of written instructions from MMS.

(3) A payor whose aggregate royalty payment obligation to MMS is less than $10,000, including bills for RIK oil and for additional royalties owed as the result of audit findings, must use one of the following payment methods:

(i) Federal Reserve check.

(ii) Commercial check. (Drawn on a solvent bank.)

(iii) Money order.

(iv) Bank draft. (Drawn on a solvent bank.)

(v) Cashier's check.

(vi) Certified check.

(vii) Electronic Funds Transfer.

(4) All payment methods except EFT should be inscribed payable to *Department of the Interior–MMS.*

(b) *Payment of bonuses.* (1) One-fifth bonus bid deposit amounts required to participate in competitive lease sales are to be paid in accordance with instructions included in the notice of lease offering.

(2) The successful bidder in the competitive sale of an offshore oil, gas, or sulfur lease shall pay the remaining four-fifths bonus to MMS by EFT in accordance with 30 CFR 218.155(c), unless otherwise directed by MMS.

(3) If permitted under the terms of the sale, as stated in the lease sale notice, the successful bidder in the competitive sale of certain other leases, such as coal, geothermal, or offshore minerals other than oil, gas, or sulfur, may elect to pay the remaining four-fifths bonus in total or submit the payment in equal annual installments over a specified number of years. If paid in total, the successful bidder shall pay the remaining four-fifths bonus in accordance with instructions included in the notice of lease offering. If the successful bidder is permitted to make annual installment payments of the remaining four-fifths bonus, equal deferred bonus payments are payable no later than the lease anniversary date.

(4) Installment payments of deferred bonuses to MMS must be made in accordance with the regulations governing the payment of royalties contained in paragraph (a) of this section.

(c) *Payment of rentals.* First-year rental shall be paid in accordance with instructions included in the notice of lease offering. The successful bidder in the competitive sale of an offshore oil, gas, or sulfur lease shall pay the first-year rental to MMS by EFT in accordance with 30 CFR 218.155(c), unless otherwise directed by MMS. Payments of rentals to MMS (other than the first-year rental) must be made by one of the payment methods used for paying royalties shown in paragraph (a)(3) of this section.

(d) *Other payments.* Payments of amounts other than royalties, bonuses, or rentals, including payments of interest or penalty assessments, must be made by one of the payment methods in paragraph (a)(3) of this section.

(e) *General payment information.* (1) Payments for offshore and onshore Federal leases shall be segregated from payments for Indian leases. All payments to MMS shall be made by one of the payment methods in paragraph (a)(3) of this section. For payments made by EFT, the deposit message shall include information as specified by MMS.

(2) Failure to make timely or proper payments of any monies due pursuant to leases, permits, and contracts subject to these regulations may result in the collection of the amount past due plus a late-payment charge in accordance with 30 CFR 218.54. Exceptions to this late-payment charge may be granted when estimated payments on mineral production have previously been made in accordance with MMS instructions to the payor. Failure to make rental payments may result in lease termination or cancellation.

(3) For payments by check for Indian leases, the following instructions are applicable:

(i) For Indian allotted leases, payments shall be aggregated and identified on a single check for each respective Bureau of Indian Affairs agency/area office that has jurisdiction over the lease(s) for which the payment is made.

(ii) For Indian tribal leases, payments to MMS shall be aggregated and identified on a single check for each respective Indian tribe to which the royalty is owed.

(iii) For Indian tribes using a lockbox, payment shall be aggregated and identified on a single check and sent to the lockbox.

(iv) When aggregate payments are made (single check), the payment identification required in paragraphs (e)(3) (i), (ii) and (iii) of this section shall be provided in a format to be specified by MMS.

(4) In accordance with 30 CFR 243.2, all payments to MMS are due as specified and are not deferred or suspended by reason of an appeal having been filed unless such deferral or suspension is approved in accordance with that section.

(5) Failure to submit payment of any amount owed to the MMS may subject the person who has payment responsibility to the civil penalty provisions of 30 CFR 241.20 and 241.51.

(f) *Where to pay.* (1) The Report of Sales and Royalty Remittance (Form MMS–2014 or Form MMS–4014) and the applicable payment (payable to the *Department of the Interior—MMS)* shall be mailed to the following address: Minerals Management Service, Royalty Management Program, P.O. Box 5810 T.A., Denver, Colorado 80217. Post Office Box 5640 must be used with the above address to send rental or deferred bonus payments for Federal nonproducing leases not required to be reported on the Form MMS–2014 or Form MMS–4014.

(2) Reports and payments delivered to MMS by special couriers or overnight mail shall be addressed as follows: Mineral Management Service, Royalty Management Program, Bldg. 85, Denver Federal Center, Room A–212, Revenue & Document Processing, Denver, Colorado 80225.

(3) Reports or payments received at the MMS addresses listing in paragraphs (f) (1) and (2) of this section after 4 p.m. mountain time at MMS are considered

next-day receipts. Mailing a report or a payment or otherwise depositing it for delivery does not constitute receipt for purposes of the regulations in this title.

3. Section 218.100 is amended by revising paragraph (a) and adding paragraph (c) to read as follows:

§ 218.100 Royalty and rental payments.

(a) *Payment of royalties and rentals.* As specified under the provisions of the lease, the lessee shall submit all rental payments when due and shall pay in value or deliver in production all royalties in the amounts of value or production determined by MMS to be due.

* * * * *

(c) *Method of payment.* The payor shall tender all payments in accordance with 30 CFR 218.51.

§ 218.150 [Amended]

4. Section 218.150, paragraph (a), is revised to read as follows:

(a) As specified under the provisions of the lease, the lessee shall submit all rental payments when due and shall pay in value or deliver in production all royalties and net profit shares in the amounts of value or production determined by MMS to be due.

* * * * *

§ 218.155 [Amended]

5. Section 218.155, paragraph (a), is revised to read as follows:

(a) *Payment of royalties and rentals.* With the exception of first-year rental, the payor shall tender all payments in accordance with 30 CFR 218.51. First-year rental shall be paid in accordance with paragraph (c) of this section.

* * * * *

6. Section 218.155 is amended by removing paragraph (d) and paragraphs (e) and (f) are redesignated as paragraphs (d) and (e), respectively.

7. A new § 218.156 is added to subpart D to read as follows:

§ 218.156 Definitions.

Terms used in this subpart have the same meaning as in 30 U.S.C. 1702.

§ 218.200 [Redesignated as 218.202]

8. Section 218.200 is redesignated as § 218.202.

9. New §§ 218.200 and 218.201 are added to read as follows:

§ 218.200 Payment of royalties, rentals, and deferred bonuses.

As specified under the provisions of the lease, the lessee shall submit all rental and deferred bonus payments when due and shall pay in value all royalties in the amount determined by MMS to be due.

§ 218.201 Method of payment.

The payor shall tender all payments in accordance with 30 CFR 218.51.

10. Section 218.300 is revised to read as follows:

§ 218.300 Payment of royalties, rentals, and deferred bonuses.

As specified under the provisions of the lease, the lessee shall submit all rental and deferred bonus payments when due and shall pay in value all royalties in the amount determined by MMS to be due.

§ 218.301 [Redesignated as 218.302]

11. Section 218.301 is redesignated as § 218.302.

12. A new § 218.301 is added to read as follows:

§ 218.301 Method of payment.

The payor shall tender all payments in accordance with 30 CFR 218.51.

[FR Doc. 87-14403 Filed 6-24-87; 8:45 am]
BILLING CODE 4310-MR-M

---

30 CFR Part 250

Oil and Gas and Sulphur Operations in the Outer Continental Shelf; Report Requirements

AGENCY: Minerals Management Service, Interior.

ACTION: Final rule.

SUMMARY: The rule amends the regulations by deleting the requirement for a monthly report of operations under 30 CFR 250.93 and by adding the requirement for a cessation of production report of the last well on a lease. The deletion of the requirement for the monthly report of operations avoids duplication with information available in the Oil and Gas Operations Report (OGOR) under 30 CFR 216.54 and other available sources. The additional requirement for a report when leases go off production is necessary to provide the Minerals Management Service (MMS) with timely information so approval can be given to lessees for drilling or workover operations only on valid leases.

EFFECTIVE DATE: The rule becomes effective on July 27, 1987.

FOR FURTHER INFORMATION CONTACT: Gerald D. Rhodes, Telephone (703) 648-7814, or (FTS) 959-7814.

SUPPLEMENTARY INFORMATION: In the **Federal Register** of March 7, 1986 (51 FR 8168), MMS published a final rule requiring submission of the OGOR. The OGOR includes information concerning production on a lease and was intended as a replacement for the monthly report of operations. The information in OGOR duplicates much of the information contained in the monthly report of operations required under current 30 CFR 250.93. Other information contained in the monthly report of operations is available to MMS through other means. Therefore, the requirement for the monthly report of operations is being removed.

The OGOR is due 45 days after the end of the month being reported (as opposed to 20 days for the monthly report of operations). This results in a critical delay in the identification of leases which are no longer producing. The delay is critical because, in the absence of a suspension of operations, the term of a lease which is beyond its primary term can be extended only if a drilling or workover operation is initiated within 90 days of last production (or of the last workover or drilling operation). Therefore, following cessation of production, MMS can approve the initiation of a workover or drilling operation only if less than 90 days have elapsed since production on the lease has ceased. Otherwise, the lease would have terminated.

A partial report is needed in advance of the OGOR to provide the timely information needed for MMS to assure that leases are still active prior to approval of drilling or workover operations. The MMS proposed to require the lessee to submit such a report within 15 days after the end of the first month in which production ceases. This report would include the date that the last well ceased production and the number of the well.

A notice of proposed rulemaking to delete the monthly report of operations and to require a report of cessation of production was published in the **Federal Register** on October 20, 1986 (51 FR 37200).

Five comments endorsing the deletion of the monthly report of operations were received with the following observations: One commenter supported the rule as proposed, and another supported the proposed rule with minor editorial changes. One commenter suggested a revision of MMS's timeframe for cessation of production that would make the submission of the proposed report unnecessary. One commenter considered the cessation of production report unnecessary and in conflict with MMS's goal of simplified reporting, and another considered the cessation of production report unnecessary but offered alternatives in lieu of the report.

The MMS has made these suggested editorial changes. The remainder of the comments is discussed below.

Discussion of Comments

Comment: It was suggested that since the data for the cessation of production report are included in the OGOR, MMS could revise the timeframe for cessation of production from 90 to 120 days, thereby allowing monitoring of cessation of production through OGOR.

Discussion: The MMS disagrees with the commenter. The OGOR was designed to allow for efficiency in accounting and should not unduly control operational procedures. The 90-day timeframe is part of MMS's policy for maintaining diligence in operation. The timeframe will not be changed to 120 days on the basis of when certain information is available.

Comment: There was objection to the additional reporting requirements. The commenter added that it conflicted with MMS's goal of simplification in reporting.

Discussion: The MMS is attempting to reduce reporting requirements where possible. However, MMS reiterates that the additional requirement is necessary to provide MMS with timely information so that approval can be given to lessees for drilling or workover operations only on valid leases.

Comment: One commenter objected to the requirement for the new report because the report would be unnecessary in cases where production ceased and then resumed as usual and also would be unnecessary in cases where production had ceased during a suspension of production. In addition, the commenter felt that the information could be collected by modifying the Application for Permit to Drill, Deepen, or Plug Back (APD) and the Sundry Notices and Reports on Wells.

Discussion: The MMS agrees with the commenter's objection to the requirement when production has ceased and resumed as usual and calls the commenter's attention to the last sentence of the proposed rule where it is stated that a report is not required when production resumes within 15 days after the end of the first month in which no production occurs. The MMS agrees with the commenter's objection to the requirement when production has ceased during a suspension of production and has added a sentence where it is stated that a report is not required when production ceases as a result of a suspension of production. The MMS does not agree that the burden would be reduced by adding requirements to current forms for APD's and Sundry Notices and Reports on Wells. Additions to these forms will increase the burden on industry each time one of the forms is used even though the information concerning cessation of production will apply to the APD or to the Sundry Notices and Reports on Wells in relatively few cases. The fact that a lease is no longer in production is critical to the implementation of the regulation governing that particular lease and is also important to MMS in planning for future lease sales. The MMS does not agree that the suggested change will reduce the burden on industry and believes that the rule as drafted will minimize the burden on the lessee while providing MMS with information which will be more useful than that which would be provided if the suggested revision were adopted.

The Department of the Interior (DOI) has determined that this document is not a major rule under Executive Order 12291 because the annual economic effect is less than $100 million.

The DOI also certifies that the rule will not have a significant effect on a substantial number of small entities under the Regulatory Flexibility Act (5 U.S.C. 601 *et seq.*). Entities that engage in offshore activities are not considered small due to the technical complexity and financial resources necessary to conduct offshore activities.

This rule does not contain information collection requirements which require approval by the Office of Management and Budget under 44 U.S.C. 3501 *et seq.*

Author: The principal author of this document is John Mirabella, Offshore Rules and Operations Division, Minerals Management Service.

List of Subjects in 30 CFR Part 250

Continental shelf, Environmental impact statements, Environmental protection, Government contracts, Investigations, Oil and gas exploration, Penalties, Pipelines, Public lands-mineral resources, Reporting and recordkeeping requirements.

Dated: May 14, 1987.

William D. Bettenberg,

Director, Minerals Management Service.

For the reasons set forth above, 30 CFR Part 250 is amended as follows:

PART 250—OIL AND GAS AND SULPHUR OPERATIONS IN THE OUTER CONTINENTAL SHELF

1. The authority citation for Part 250 continues to read as follows:

Authority: Outer Continental Shelf Lands Act, 43 U.S.C. 1331 *et seq.*, as amended, 92 Stat. 629; National Environmental Policy Act of 1969, 42 U.S.C. 4321 *et seq.* (1970); Coastal Zone Management Act of 1972, as amended, 16 U.S.C. 1451 *et seq.*

2. Section 250.93 is revised to read as follows:

§ 250.93 Report of cessation of production.

When a lease is in its extended term under § 256.37(b), a report shall be submitted to the District Supervisor when the last well on the lease ceases production. Such a report shall contain the number of the well and the date that the last well ceased production and shall be submitted within 15 days after the end of the first month in which production ceases. A report is not required when production resumes within 15 days after the end of the first month in which no production occurs or when production ceases as a result of a suspension of production.

[FR Doc. 87-14404 Filed 6-24-87; 8:45 am]
BILLING CODE 4310-MR-M

DEPARTMENT OF DEFENSE

Corps of Engineers, Department of the Army

33 CFR Part 222

[ER 1110-2-240]

Engineering and Design; Water Control Management; Correction

AGENCY: U.S. Army Corps of Engineers, Defense.

ACTION: Final rule; correction.

SUMMARY: The Corps of Engineers published a revised list of major projects owned and operated by the Corps of Engineers on April 30, 1987 (52 FR 15804). This document corrects errors in that list.

FOR FURTHER INFORMATION CONTACT: Dr. Ming Tseng, Chief, Water Control/Quality Section, (202) 272-8509.

Accordingly, make the following corrections in FR Doc 87-9535 beginning on page 15804 in the issue of Thursday, April 30, 1987:

PART 222—[CORRECTED]

Appendix E—[Corrected]

1. In Appendix E, in the North Pacific Division, on page 15810, remove "Hells Canyon Dam & Res." and its corresponding entries in the remaining columns of the table.

2. In the South Pacific Division, on page 15815, remove "Warm Springs Dam Sonoma Lk." and its corresponding entries in the remaining columns of the table.

3. In Appendix E, the following entries are corrected to read as follows:

Dated: June 18, 1987.

David Wingerd,

Acting Chief Water Control/Quality Section.

APPENDIX E—LIST OF PROJECTS

Project name [1]	State/county	Stream [1]	Project purpose [2]	Storage 1,000 AF	Elev limits feet M.S.L.		Area in acres		Auth legis [3]
					Upper	Lower	Upper	Lower	
Lower Mississippi Valley Division									
Alligator—Catfish FG	MS Issaquena	Little Sunflower	F	0.0	0.0	0.0	0	0	FCA Jun 36.
Arkabutla Lk	MS Desoto	Coldwater	F	525.0	238.3	209.3	33,400	5,100	FCA Jun 36.
Ascalmore—Tippo FG & CS	MS Tallahatchie	Ascalmore	F	0.0	136.0	118.0	0	0	FCA Jun 36.
Bienvenue FG	LA St Bernard	Bayou Bienvenue	F	0.0	2.0	2.0	0	0	PL 298-89
Big Lk Ditch #81 CS	AR Mississippi	Ditch 81 Extension	C	0.0	0.0	230.0	0	0	FCA Oct 65.
Big Lk Div CS	AR Mississippi	Little R	C	0.0	0.0	230.0	0	0	FCA Oct 65.
Big Lk North End CS	AR Mississippi	Little R	C	0.0	0.0	230.0	0	0	FCA Oct 65.
Big Lk South end CS	AR Mississippi	Ditch 28	C	0.0	0.0	230.0	0	0	FCA Oct 65.
Birds Point—New Madrid Div Floodway.	MO New Madrid	Mississippi	F	0.0	330.5	328.5	131,000	71,000	FCA May 28.
Bodcau Lk	LA Bossier	Bayou Bodcau	F	35.3	199.5	157.0	21,000	110	PL 74-839.
Bonnet Carre Div Spillway	LA St Charles	Mississippi R	F	0.0	24.0	20.0	0	0	FCA May 28.
Bowman Lock	LA Vermilion	GIWW	I	0.0	1.2	1.2	0	0	PL 79-14.
Caddo Lk	LA Caddo	Cypress Bayou	N	128.6	182.7	168.5	59,000	26,800	FCA Oct 65.
Cairo 10th & 20th St PS	IL Pulaski	Ohio	F	0.0	310.5	299.0	0	0	PL 90-483.
Calcasieu SW Barrier & Lock	LA Calcasieu	Calcasieu R	I	0.0	1.2	1.2	0	0	RHA Oct 62. PL 79-525.
Calion L&D	AR Union	Ouachita	N	0.0	77.0	77.0	12,200	12,200	RHA 1950.
Calumert FG East & West	LA St Mary	Wax Lake Outlet Bayou Teche.	FN	0.0	3.0	3.0	0	0	FCA Jun 36.
Cannon Re-reg	MO Ralls	Salt R	PCA	5.8	528.0	521.0	1,020	460	HD 507.
Carlyle Lk	IL Clinton	Kaskaskia R	F	699.0	462.5	445.0	50,440	24,580	SD 44.
			NMCAR	233.0	445.0	429.5	0	7,100	
Catahoula Lk CS	LA LaSalle	Catahoula Div	CR	118.0	34.0	27.0	25,000	94	RHA 1960.
Catfish Point CS	LA Cameron	Mermentau R	FN	0.0	1.2	1.2	0	0	FCA Aug 41, RHA Jul 64.
Charenton FG	LA St Mary	Grand Lk	FN	0.0	0.0	0.0	0	0	RHA Jul 46, FCA May 28.
Cocodrie FG FG	LA Concorida	Bayou Cocodrie	F	0.0	46.0	13.0	0	0	FCA Aug 41.
Collins Cr	MS Warren	Collins Cr	F	0.0	84.0	67.0	0	0	FCA 1941.
Columbia L&D	LA Caldwell	Ouachita	N	0.0	52.0	52.0	7,070	7,070	RHA 1950.
Connerly CS	AR Chicot	Connerly Bayou	FCR	0.0	116.0	106.0	0	0	FCA Aug 68.
Courtableau Drainage CS	LA St Landry	Bayou Courtableau	F	0.0	18.0	16.0	0	0	FCA May 28, PL 391-70.
Darbonne CS	LA St. Landry	Bayou Darbonne	FI	0.0	18.0	16.0	0	0	FCA May 28. PL391-70.
DeGray LK	AR Desoto	Caddo	FNPMRA	881.9	423.0	345.0	23,800	6,400	RHA 1950, WSA 1958.
DeGray Rereg. St	AR Clark	Caddo	NMRA	3.6	221.0	209.0	430	90	RHA 1950. WSA 1958.
Ditch Bayou Dam	AR Chicot	Ditch Bayou	FCR	0.0	106.0	93.0	0	0	FCA Aug 68.
Drainage Dist #17 PS	AR Mississippi	Ditch 71	F	3.0	236.0	228.0	4,100	0	FCA Aug 68, PL 90-483.
Drinkwater PS	MO Mississippi	Drinkwater Sewer	F	20.6	315.0	307.0	4,000	700	FCA May 50, PL 516.
Dupre FG	LA St Bernard	Bayou Dupre	F	0.0	2.0	2.0	0	0	PL 298-89.
East St Louis PS	IL St. Clair	IDD	F	0.0	0.0	0.0	0	0	FC Act 36.
Empire FG Hurr Prot & Lock	LA Plaque mines	Mississippi R	F	0.0	5.0	5.0	0	0	PL 874-87.
Enid Lk	MS Yalobusha	Yacona	F	660.0	268.0	230.0	28,000	6,100	FCA Jun 36.
Felsenthal L&D	AR Union	Ouachita	N	32.5	70.0	65.0	46,500	17,500	RHA 1950.
Finley Street PS	TN Dyer	Forked Deer	F	0.5	269.0	257.0	94	22	FCA 1948, PL 85-500.
Freshwater Lock	LA Vermilion	Freshwater Bayou	I	0.0	0.0	0.0	0	0	PL 86-645.
			NI						
Graham Burke PS	AR Phillips	White	F	2,805.0	174.8	140.0	149,000	2,500	FCA May 28, PL 85-500.
Grenada Lk	MS Grenada	Yalobusha Skuna	F	1,357.4	231.0	193.0	64,600	9,800	FCA Jun 36.
Huxtable PS	AR Lee	St Francis	F	2,863.0	207.2	165.0	18,500	1,400	FCA May 50.
Jonesville L&D	LA Catahoula	Black	N	0.0	34.0	34.0	7,120	7,120	RHA 1950.
Kaskaskia L&D	IL Randolph	Kaskaskia R	N	1.1	368.0	363.0	1,300	1,200	SD 44.
L&D 1	LA Catahula	Red R	N	0.0	40.0	40.0	0	0	PL 90-483.
L&D 2	LA Rapides	Red R	N	0.0	71.2	64.0	0	0	PL 90-483.
L&D 3	LA Rapides	Red R	N	0.0	95.0	91.5	0	0	PL 90-483.
L&D 4	LA Natchitoches	Red R	N	0.0	120.0	119.6	0	0	PL 90-483.
L&D 5	LA Red R	Red R	N	0.0	145.0	140.2	0	0	PL 90-483.
L&D 24	MO Pike	Mississippi R	N	29.7	449.0	445.0	13,000	12,000	R&H Act, Jul 3/30. R&H Act, Aug 30/35.
L&D 25	MO Lincoln	Mississippi R	N	49.7	434.0	429.7	18,000	16,600	R&H Act, Jul 3/30. R&H Act, 8/30/35.
L&D 26	IL Madison	Mississippi R	N	107.1	419.0	414.0	30,000	27,700	R&H Act, Jul 3/30. R&H Act, 8/30/1935.
Larose to Golden Meadow Hurr Prot FG.	LA LaFourche	Bayou LaFourche	F	0.0	3.0	3.0	0	0	FCA Oct 65, PL 89-298.
Little Sun flower CS	MS Issaquena	Lit. Sunflower	F	0.0	85.0	60.0	0	0	FCA 1941.
Lk #9 Culvert & PS	KY Fulton	Mississippi	F	6.5	286.0	282.0	0	0	FCA Oct 65.
Lk Chicot PS	AR Chicot	Macon Lk	FCR	0.0	118.2	90.0	0	0	FCA Aug 68.
Lk Greeson	AR Pike	Little Missouri	P	0.0	563.0	436.9	0	0	FCA 1941.
			FP	407.9	563.0	504.0	9,800	2,500	
Lk Ouachita	AR Garland	Ouachita	P	0.0	592.0	480.0	0	0	FCA Dec 44.
Long Branch DS	LA Catahouta	Catahoula Div	F	0.0	32.5	32.5	0	0	FCA May 50.
Mark Twain Lk	MO Ralls	Salt R	F	894.0	638.0	606.0	38,400	18,600	HD 507.
			PMCAR	457.0	606.0	567.2	18,600	5,900	
Marked Tree Siphon	AR Poinsett	St. Francis	F	0.0	229.0	198.3	0	0	FCA Jun 30.

APPENDIX E—LIST OF PROJECTS—Continued

Project name [1]	State/county	Stream [1]	Project purpose [2]	Storage 1,000 AF	Elev limits feet M.S.L.		Area in acres		Auth legis [3]
					Upper	Lower	Upper	Lower	
Morganza Div CS	LA Point Coupee	Morganza Floodway	F	0.0	59.5	49.0	0	0	FCA May 28.
Muddy Bayou CS	MS Warren	Muddy Bayou	FC	30.0	76.9	70.0	4,350	2,860	FCA Oct 65.
Old River Div CS Low Sill Overbank & Aux.	LA W. Feliciana	Old R	F	0.0	70.0	5.0	0	0	PL 83-780.
Old River Lock	LA W Feliciana	Old R	N	0.0	65.4	10.0	0	0	FCA Sep 54, PL 780-83.
Port Allen Lock	LA Port Allen	GIWW	N	0.0	46.1	2.6	0	0	RHA Jul 46.
Prairie Dupont East & West PS	IL St Clair	IDD	F	0.0	0.0	0.0	0	0	FC Act 62.
Rapides-Boeuf Div Canal CS	LA Rapides	Bayou Rapides	F	0.0	66.0	62.2	0	0	FCA Aug 41, GD 359-77.
Rend Lk	IL Franklin	Big Muddy R	F	109.0	405.0	410.0	24,800	18,900	HD 541.
			MA	160.0	405.0	391.3	18,900	5,400	
Sardis Lk	MS Panola	Little Sunflower	F	1,569.9	281.4	236.0	58,500	10,700	FCA Jun 36.
Schooner Bayou CS & Lock	LA Vermilion	Schooner Bayou	I	0.0	1.2	1.2	0	0	FCA Aug 41.
Shelbyville Lk	IL Shelby	Kaskaskia R	F	474.0	626.5	599.7	25,300	11,100	HD 232.
			NMCAR	180.0	599.7	573.0	11,100	3,000	
Sorrell Lock	LA Iberville	GIWW	N	0.0	29.7	3.5	0	0	FCA May 28.
St Francis Lk CS	AR Poinsett	Oak Donnick Floodway	C	0.0	0.0	210.0	0	2,240	FCA Oct 65.
Steele Bayou CS	MS Issaquena	Steele Bayou	F	0.0	68.5	60.0	0	0	FCA 1941.
Tchula Lk Lower FG	MS Humphreys	Tchula Lk	F	0.0	110.0	84.0	0	0	FCA Jun 36.
Tchula Lk Upper FG	MS Humphreys	Tchula Lk	F	0.0	108.0	92.0	0	0	FCA Jun 36.
Teche-Vermilion PS & CS	LA St Mary	Atchafalaya R	MI	0.1	18.0	16.0	0	0	PL 89-789, FCA May 28.
Tensas-Cocodrie PS	LA Cocordia	Bayou Corcodrie	F	0.0	37.0	23.0	0	0	FCA Oct 65.
Treasure Island PS	MO Dunklin	Little R	F	23.4	252.0	235.0	7,800	180	FCA Jul 46.
Wallace Lk	LA Caddo	Cypress Bayou	F	96.1	158.0	142.0	9,300	2,300	RHA Mar 45, PL 75-761.
Wappapello Lk	MO Wayne	St Francis R	F	613.2	394.7	354.7	23,200	5,200	HD 159.
Wasp Lk	MS Humphreys	Wasp Lk-Bear Cr	F	0.0	111.6	88.5	0	0	FCA Jun 36.
West Hickman PS	KY Fulton	Mississippi	F	0.0	302.0	296.0	9	4	FCA 1948.
Wood R PS	IL Madison	IDD	F	0.0	0.0	0.0	0	0	FC Act 38.
Yazoo City PS	MS Yazoo	Yazoo	F	0.0	96.0	69.0	0	0	FCA Jun 36.
Missouri River Division									
*	*	*	*	*	*	*	*		
Bull Hook Dam	MT Hill	Bull Hook Cr Scott Coulee	F	6.5	2,593.0	2,540.0	283	0	PL 78-534.
*	*	*	*	*	*	*	*		
Wehrspann Lk & Dam 20	NE Sarpy	Trib South Branch Papio	F	6.1	1,113.1	1,096.0	493	246	PL 90-483.
			FCAR	2.7	1,096.0	1,069.0	246	10	HD 349-90.
*	*	*	*	*	*	*	*		
North Atlantic Division									
*	*	*	*	*	*	*	*		
Foster Joseph Sayers Dam	PA Centre	Bald Eagle Cr	F	70.2	657.0	630.0	3,450	1,730	FCA Sept 54.
Francis E. Walter Dam & Res	PA Carbon, Luzerne, Monroe	Lehigh R	F	107.8	1,450.0	1,300.0	1,830	80	PL 79-526.
*	*	*	*	*	*	*	*		
North Central Division									
Badhill Dam & Res	ND Barnes	Sheyenne R	FM	68.6	1,266.0	1,257.2	5,430	4,430	FCA Dec 44.
Brandon Road L&D	IL Will	Illinois R	N	8.0	539.0	538.0	300	250	PL 71-126.
Cedars L&D	WI Outagamie	Fox R	N	1.8	703.6	698.7	255	140	RHA of 1882, 1885.
Coralville Dam & Res	IA Johnson	Iowa R	F	439.0	712.0	680.0	24,800	3,580	PL 75-761.
			C	40.3	680.0	652.0	3,580	0	PL 75-761.
Depree L&D	WI Brown	Fox R	N	9.4	591.0	586.7	926	0	PL 71-126.
Dresden Island L&D	IL Grundy	Illinois R	N	1.0	505.0	504.0	1,690	1,550	FCA 1958.
Eau Galle Dam & Res	WI Pierce	Eau Galle R	FCR	1.6	940.0	938.5	1,500	1,350	PL 78-534.
Farmdale Dam	IL Tazwell	Farm Cr	F	11.3	616.0	551.0	385	0	PL 78-534.
Fondulac Dam	IL Tazwell	Fondulac Cr	F	2.3	579.0	530.0	97	0	PL 78-534.
Gull Lk Dam & Res	MN Cass	Gull R	N	70.4	1,194.0	1,192.7	13,100	12,700	RHA 1899.
Highway 75 Dam & Res	MN Bigstone, Lacqui, Parle	Minnesota R	FC	11.1	952.3	947.3	2,790	910	FCA Oct 65.
Homme Dam & Res	ND Walsh	Park R	FM	3.7	1,080.0	1,074.0	190	176	FCA of 22 Dec 44.
L&D 1	MN Hennepin, Ramsey	Mississippi R	N	13.0	725.1	722.8	5,800	5,500	RHA 1910.
L&D 2	MN Dakota, Wash	Mississippi R	N	8.0	687.2	686.5	11,810	11,000	RHA 1927.
L&D 3	MN Goodhue, Pierce	Mississippi R	N	17.8	675.0	674.0	17,950	17,650	RHA 1930.
L&D 4	WI Wabasha, Buffalo	Mississippi R	N	18.0	667.0	666.5	38,820	36,600	RHA 1930.
L&D 5	MN Winona, Buffalo	Mississippi R	N	6.2	660.0	659.5	12,680	12,000	RHA 1930.
L&D 5A	MN Winona, Buffalo	Mississippi R	N	7.2	651.0	650.0	7,500	7,000	RHA 1930.
L&D 6	MN Winona	Mississippi R	N	8.4	645.5	644.5	8,870	8,000	RHA 1930.
L&D 7	MN Winona	Mississippi R	N	2.6	639.0	639.0	13,440	13,400	RHA 1930.
	WI LaCrosse								
L&D 8	MN Houston	Mississippi R	N	20.4	631.0	630.0	20,800	20,000	RHA 1930.
	WI Vernon								
L&D 9	WI Crawford	Mississippi R	N	28.7	620.0	619.0	29,125	28,300	RHA 1930.
	IA Allamakee								
L&D 10	IA Clayton	Mississippi R	N	16.8	611.0	610.0	17,070	16,500	RHA 1930.
	WI Grant								
L&D 11	IA Dubuque	Mississippi R	N	19.1	603.1	602.0	21,100	20,000	PL 71-520.
L&D 12	IA Jackson	Mississippi R	N	12.2	592.1	591.0	13,000	12,400	PL 71-520.
L&D 13	IL Whiteside	Mississippi R	N	24.2	583.1	582.0	30,000	28,500	PL 71-520.
L&D 14	IA Scott	Mississippi R	N	9.0	572.1	571.0	10,500	9,980	PL 71-520.
L&D 15	IL Rock Island	Mississippi R	N	5.5	561.1	559.0	3,725	3,540	PL 71-520.
L&D 16	IL Rock Island	Mississippi R	N	12.1	545.1	544.0	13,000	12,400	PL 71-520.
L&D 17	IL Mercer	Mississippi R	N	7.5	537.1	536.0	7,580	7,200	PL 71-520.
L&D 18	IL Henderson	Mississippi R	N	11.0	529.1	528.0	13,300	12,600	PL 71-520.
L&D 19	IA Lake	Mississippi R	N	55.0	518.2	517.2	33,500	31,800	PL 71-520.

APPENDIX E—LIST OF PROJECTS—Continued

Project name [1]	State/county	Stream [1]	Project purpose [2]	Storage 1,000 AF	Elev limits feet M.S.L.		Area in acres		Auth legis [3]
					Upper	Lower	Upper	Lower	
L&D 20	MO Lewis	Mississippi R	N	5.8	481.5	476.5	7,960	7,550	PL 71-520.
L&D 21	IL Adams	Mississippi R	N	8.6	470.1	469.6	9,390	8,910	PL 71-520.
L&D 22	MO Polke	Mississippi R	N	8.4	459.6	459.1	8,660	8,230	PL 71-520.
Lac qui Parle Dam & Res	MN Chippewa Swift	Minnesota R	FC	119.3	941.1	931.2	13,500	6,400	FCA of 22 Jun 36.
Lagrange L&D	IL Brown	Illinois R	N	0.0	429.0	429.0	10,500	10,500	PL 73-184.
Leech Lake Dam & Res	MN Cass	Leech R	N	300.2	1,295.7	1,293.2	139,000	107,200	RHA of 1882 1895.
Little Kaukauna L&D	WI Brown	Fox R	N	3.6	601.0	592.8	447	42.0	RHA of 1882 1885.
Little Chute L&D	WI Outagamie	Fox R	N	0.4	694.2	688.9	74	67	RHA of 1882 1885.
Lockport Lock	IL Will	Chicago San Ship Canal	FNP	2.7	579.0	577.5	1,850	1,800	RHA 1930.
Lower Appleton L&D	WI Outagamie	Fox R	N	0.2	710.9	706.3	43	40	RHA of 1882 1895.
Marseilles Lk & Dam	IL LaSalle	Illinois R	N	0.7	483.0	482.8	1,400	1,320	PL 71-126.
Marsh Lake Dam & Res	MN Swift, Lacqui, Parle	Minnesota R	FC	23.9	941.1	937.6	8,650	5,150	FCA Jun 36.
Menasha Dam Lk Winnebago	WI Winnebago	Fox R	FN	452.0	746.8	743.5	181,120	168,500	
Mount Morris Dam	NY Livingston	Genesee R	F	337.4	760.0	585.0	3,300	0	PL 74-738.
O'Brien L&D	IL Cook	Calumet	N	0.3	581.9	578.2	50	50	RHA of 1946.
Peoria L&D	IL Peoria	Illinois R	N	0.0	440.0	440.0	27,800	27,800	PL 73-184.
Pine Dam & Res	MN Crow Wing	Pine R	N	40.4	1,230.3	1,227.3	13,900	13,000	RHA of 1899.
Pokegama Dam & Res	MN Itasca	Mississippi R	N	52.4	1,274.4	1,270.3	13,700	12,000	RHA of 1899.
Rapid Croche L&D	WI Outagamie	Fox R	N	3.4	608.5	602.1	568	0	RHA 1885.
Red Lake Dam & Res	MN Clearwater	Red Lake R	FA	1,810.0	1,174.0	1,173.5	288,800	287,300	FCA Dec 44.
Red Rock Dam & Res	IA Marion	Des Monies R	F	1,670.0	780.0	728.0	65,400	8,000	PL 75-761.
			R	72.0	728.0	690.0	8,000	0	PL 75-761.
Reservation Control Res	MN Traverse		FC	58.8	981.0	976.0	12,400	10,950	FCA 1936.
	SD Roberts								
Sandy Lake Dam & Res	MN Aitkin	Sandy R	N	37.5	1,218.3	1,214.3	10,600	8,200	RHA of 1899.
Saylorville Dam & Res	IA Polk	Des Moines R	F	586.0	890.0	836.0	16,700	5,950	FCA 1936.
			P	90.0	836.0	810.0	5,950	0	FCA.
St Anthony Falls Lwr L&D	MN Hennepin	Mississippi R	N	0.0	750.0	750.0	50	50	RHA of 1937 1945.
St Anthony Falls Upr L&D	MN Hennepin	Mississippi R	N	17.4	801.0	799.0	8,800	8,600	RHA of 1937 1945.
Starved Rock L&D	IL LaSalle	Illinois R	N	1.0	459.0	458.0	1,155	1,020	PL 69-100.
Upper Appleton L&D	WI Outagamie	Fox R	N	7.4	738.7	735.4	1,171	1,040	RHA of 1882 1885.
Upper Kaukauna L&D	WI Outagamie	Fox R	N	1.1	656.8	652.8	134	115	RHA of 1882 1885.
White Rock Dam & Res	MN Traverse	Bois De Soulx	FC	78.6	981.0	972.0	10,500	4,000	FCA 1936.
	SD Roberts								
Winnibigoshish Dam & Res	MN Cass Itasca	Mississippi R	N	98.7	1,300.9	1,296.9	98,700	62,000	RHA of 1899.
New England Division									
Buffumville Lk	MA Worcester	Little R	F	11.3	524.0	492.5	530	200	PL 77-228.
South Atlantic Division									
Philpott Dam & Lk	VA Henry	Smith R	F	34.2	985.0	974.0	3,370	2,880	PL 78-534.
			FP	111.2	974.0	920.0	2,880	1,350	
William Bacon Oliver L&D and Res	AL Tuscaloosa	Black Warrior R	N	0	122.9	122.9	790	790	PL 60-317.
South Pacific Division									
Carbon Canyon Dam & Res	CA Orange	Carbon Cr	F	6.6	475.0	403.0	225	0	PL 74-738.
Dry Cr (Warm Springs) Lk & Channel.	CA Sonoma	Dry Cr	F	136.0	495.0	451.1	3,600	2,600	PL 87-874.
			MR	225.0	451.1	291.0	2,600	500	
Farmington Dam	CA San Joaquin, Stanislaus	Littlejohn Cr	F	52.0	156.5	120.0	4,107	0	PL 78-534.
Fullerton Dam & Res	CA Orange	Fullerton Cr	F	0.8	290.0	261.0	62	0	FCA 1936.
Martis Cr Lk	CA Nevada	Martis Cr	F	19.6	5,838.0	5,780.0	762	61	PL 87-874.
Pine Flat Lk Kings R	CA Fresno	Kings R	F	1,000.0	951.5	565.5	5,956	0	PL 78-534.
Prado Dam & Res	CA Riverside	Santa Ana R	F	196.2	543.0	460.0	6,630	0	FCA 1936.
Santa Fe Dam & Res	CA Los Angeles	San Gabriel R	F	32.1	496.0	421.0	1,084	0	FCA 1936, 1941.
Southwestern Division									
Arcadia Lk	OK Oklahoma	Deep Fork R	F	64.4	1,029.5	1,006.0	3,820	1,820	PL 91-611.
			FMCR	27.4	1,006.0	970.0	1,820	20	
Beaver Lk	AR Carrol, Benton, Washington.	White R	F	299.6	1,130.0	1,120.0	31,700	28,220	PL 83-780.
			FPM	925.1	1,120.0	1,077.0	28,220	15,540	PL 85-500.

APPENDIX E—LIST OF PROJECTS—Continued

Project name [1]	State/county	Stream [1]	Project purpose [2]	Storage 1,000 AF	Elev limits feet M.S.L.		Area in acres		Auth legis [3]
					Upper	Lower	Upper	Lower	
*	*	*	*	*	*	*	*	*	
Blue Mountain Lk	AR Yell, Logan	Petit Jean R	F	233.3	419.0	384.0	11,000	2,910	PA 75-761.
*	*	*	*	*	*	*	*	*	
Bull Shoals Lk	AR Baxter, Marion, Boone	White R	F	2,360.0	695.0	654.0	71,240	45,440	PL 77-228.
	MO Ozark, Taney		PF	1,003.0	654.0	628.5	45,440	33,800	
*	*	*	*	*	*	*	*	*	
Clearwater Lk	MO Reynolds, Wayne	Black R	F	391.8	567.0	494.0	10,400	1,630	PL 75-761.
*	*	*	*	*	*	*	*	*	
DeQueen Lk	AR Sevier	Rolling Fork R	F	101.3	473.5	437.0	4,050	1,680	PL 85-500.
			FMCRQ	25.5	437.0	415.0	1,680	710	
*	*	*	*	*	*	*	*	*	
Gillham Lk	AR Howard, Polk	Cossatot R	F	188.7	569.0	502.0	4,680	1,370	PL 85-500.
			FMCQ	29.3	502.0	464.5	1,370	310	
*	*	*	*	*	*	*	*	*	
Greers Ferry Lk	AR Cleburne, Van Buren	Little Red R	F	934.0	487.0	461.0	40,460	31,460	PL 75-761.
			FP	716.5	461.0	435.0	31,460	23,740	PL 83-780.
*	*	*	*	*	*	*	*	*	
Kaw Lk	OK Kay, Osage	Arkansas R	F	919.4	1,044.5	1,010.0	38,020	17,040	PL 87-874.
	KS Cowley		FMARC	343.5	1,010.0	978.0	17,040	5,590	
Keystone Lk	OK Tulsa	Arkansas R	F	1,180.0	754.0	723.0	54,300	23,600	PL 81-516.
			FNPMC	296.7	723.0	706.0	23,600	13,300	
L&D 01, Norrell	AR Arkansas	Arkansas Post Canal	N	0.0	142.0	142.0	140	140	HD 758-79, RHA 1946.
L&D 02, Wilbur D. Mills Dam	AR Desha, Arkansas	Arkansas R	N	18.7	162.3	160.5	10,700	9,400	HD 758-79, RHA 1946.
L&D 03	AR Jefferson, Lincoln	Arkansas R	N	8.3	182.3	180.0	3,750	3,180	HD 758-79, RHA 1946.
L&D 04	AR Jefferson	Arkansas R	N	12.9	196.3	194.0	5,820	5,200	HD 758-79, RHA 1946.
L&D 05	AR Jefferson	Arkansas R	N	14.4	213.3	211.0	6,900	5,550	HD 758-79, RHA 1946.
L&D 06, David D. Terry	AR Pulaski	Arkansas R	N	9.6	231.3	229.0	4,830	4,130	HD 758-79.
L&D 07, Murray	AR Pulaski	Arkansas R	N	24.7	249.7	247.0	10,350	8,100	RHA 1946.
L&D 08, Toad Suck Ferry	AR Faulkner, Perry	Arkansas R	N	8.7	265.3	263.0	4,130	3,600	RHA 1946.
L&D 09, Arthur V. Ormond L&D, W. Rockefeller Lk.	AR Conway	Arkansas R	N	15.8	287.0	284.0	5,660	4,910	HD 758-79.
L&D 10, Lk Dardanelle	AR Pope Yell	Arkansas R	NP	72.3	338.2	336.0	34,700	31,140	HD 758-79, RHA 1946.
L&D 11, Ozark-Jetta Taylor	AR Franklin	Arkansas	NPR	25.3	372.5	370.0	11,100	8,800	RHA 1946, HD 758-79.
L&D 13, James W. Trimble	AR Sebastian, Crawford	Arkansas R	N	18.1	392.0	389.0	6,820	5,200	RHA 1946.
L&D 14, W. D. Mayo	OK Sequoyah, Leflore	Arkansas R	N	0.0	413.0	0.0	1,600	0	PL 79-525.
L&D 15, Robert S. Kerr Res	OK Leflore, Sequoyah	Arkansas R	NP	84.7	460.0	458.0	43,800	40,760	PL 79-525.
L&D 16, Webbers Falls Res	OK Muskogee	Arkansas R	NP	32.4	490.0	487.0	10,900	9,300	PL 79-525.
L&D 17, Chouteau	OK Wagoner	Verdigris R	N	0.0	511.0	511.0	2,270	2,270	PL 79-525, HD 758-79-2.
L&D 18, Newt Graham	OK Wagoner	Verdigris R	N	0.0	532.0	532.0	1,490	1,490	PL 97-525.
*	*	*	*	*	*	*	*	*	
Nimrod Lk	AR Perry, Yell	Fourche La Fave R	F	307.0	373.0	342.0	18,300	3,550	FCA 1938.
Norfork Lk	AR Baxter, Fulton	North Fork R	F	731.8	580.0	552.0	30,700	21,990	PL 75-761.
	MO Ozark		FP	707.0	552.0	510.0	21,990	12,320	FCA 1941
Georgetown Lk	TX Williamson	N.F. San Gabriel R	F	87.6	834.0	791.0	3,220	1,310	PL 87-874.
			MC	29.2	791.0	699.0	1,310	0	HD 591-82-2.
*	*	*	*	*	*	*	*	*	
Pine Cr	OK McCurtain	Little R	F	388.1	480.0	443.5	17,230	4,980	PL 85-500.
			FMAC	77.6	443.5	414.0	4,980	700	HD 170-85-1.
*	*	*	*	*	*	*	*	*	
Table Rock Lk	MO Taney, Stone, Barry	White R	F	760.0	931.0	915.0	52,250	43,070	PL 77-228.
	AR Carroll, Boone		FP	1,181.50	915.0	881.0	43,070	27,300	FCA 1938.
*	*	*	*	*	*	*	*	*	
Texoma Lk, Denison Dam	TX Marshall	Red R	F	2,669.0	640.0	617.0	144,000	88,000	PL 75-761.
	OK Bryan, Cook, Grayson		FPM	1,612.0	617.0	590.0	88,000	41,000	
*	*	*	*	*	*	*	*	*	

[1] Res—Reservoir; Lk—Lake; Div—Diversion: R—River; Cr—Creek; Fk—Fork; L&D—Lock & Dam; GIWW—Gulf Intercoastal Waterway; FG—Floodgate; CS—Control Structure: DS—Drainage Structure; PS—Pump Station.
[2] F—Flood Control; N—Navigation; P—Hydropower; I—Irrigation; M—Municipal and/or Industrial Water/Supply; C—Fish and Wildlife Conservation; R—Recreation; A—Low Flow Augmentation or Pollution Abatement; Q—Quality or Silt Control.
[3] PL—Public Law; HD—House Document; RHA—River & Harbor Act; PW—Public Works: FCA—Flood Control Act; WSA—Water Supply Act.

[FR Doc. 87-14462 Filed 6-24-87; 8:45 am]
BILLING CODE 3710-92-M

NATIONAL ARCHIVES AND RECORDS ADMINISTRATION

36 CFR Parts 1253 and 1280

Use of NARA Facilities

AGENCY: National Archives and Records Administration.

ACTION: Final rule.

SUMMARY: This National Archives and Records Administration (NARA) rule revises regulations on use of NARA facilities and updates addresses and operating hours of NARA facilities. The rule will primarily affect persons and organizations using the National

Archives Building and the Presidential Libraries.

EFFECTIVE DATE: June 25, 1987.

FOR FURTHER INFORMATION CONTACT: Adrienne C. Thomas or Nancy Allard at 202-523-3214 (FTS 523-3214).

SUPPLEMENTARY INFORMATION: This rule adds regulations on conduct at the National Archives Building and at the Presidential Libraries. These facilities are under the charge and control of NARA and are not subject to General Services Administration (GSA) regulations governing conduct on GSA-controlled Federal property (41 CFR 101-20.3). The NARA regulations are modeled on the GSA regulations. The GSA regulations do apply to all NARA facilities under GSA charge and control including the Federal Records Centers, the National Archives Field Branches, the National Personnel Records Center, the Washington National Records Center, and the Pickett Street facility.

The rule also clarifies the lighting and equipment that may be used for photographing documents or exhibits in the National Archives Building and announces policy and procedures for use of the Archivist's Reception Room by other Federal agencies and by private individuals and organizations.

This rule is not a major rule for the purposes of Executive Order 12291 of February 17, 1981. As required by the Regulatory Flexibility Act, it is hereby certified that this rule will not have a significant impact on small business entities.

List of Subjects

36 CFR Part 1253

Archives and records.

36 CFR Part 1280

Archives and records, Federal buildings and facilities.

For the reasons set forth in the preamble, Chapter XII of Title 36 of the Code of Federal Regulations is amended as follows:

PART 1253—LOCATION OF RECORDS AND HOURS OF USE

1. The authority citation for Part 1253 continues to read as follows:

Authority: 44 U.S.C. 2104(a).

2. Section 1253.1 is revised to read as follows:

§ 1253.1 National Archives Building.

The National Archives Building is located at Seventh Street and Pennsylvania Avenue, NW, Washington, DC 20408. Hours: For the Central Research Room and Microfilm Research Room, 8:45 a.m. to 10 p.m. Monday through Friday; 8:45 a.m. to 5:15 p.m. on Saturday. For other research rooms, 8:45 a.m. to 5 p.m., Monday through Friday.

3. Section 1253.3 is amended by revising paragraphs (b) through (g) and adding new paragraphs (h) and (i) to read as follows:

§ 1253.3 Presidential libraries.

* * * * *

(b) Franklin D. Roosevelt Library, 259 Albany Post Road, Hyde Park, NY 12538. Hours: 9 a.m. to 5 p.m., Monday through Friday.

(c) Harry S. Truman Library, U.S. Highway 24 at Delaware Street, Independence, MO 64050. Hours: 9 a.m. to 5 p.m., Monday through Friday.

(d) Dwight D. Eisenhower Library, Southeast Fourth Street, Abilene, KS 67410. Hours: 9 a.m. to 5 p.m., Monday through Friday.

(e) John Fitzgerald Kennedy Library, Columbia Point, Boston, MA 02125. Hours: 9 a.m. to 5 p.m., Monday through Friday.

(f) Lyndon Baines Johnson Library, 2313 Red River Street, Austin, TX 78705. Hours: 9 a.m. to 5 p.m., Monday through Friday.

(g) Gerald R. Ford Library, 1000 Beal Avenue, Ann Arbor, MI 48109-2114. Hours: 9 a.m. to 5 p.m., Monday through Friday.

(h) Gerald R. Ford Museum, 303 Pearl Street, NW, Grand Rapids, MI 49504. Hours: 9 a.m. to 5 p.m., Monday through Friday.

(i) Jimmy Carter Library, One Copenhill Avenue, Atlanta, GA 30307. Hours: 9 a.m. to 5 p.m., Monday through Friday. § 1253.4 [Amended]

§ 1253.4 [Amended]

4. Section 1253.4 is amended by removing the words "National Archives,".

5. Section 1253.6 is revised to read as follows:

§ 1253.6 Federal Records Centers and National Archives Field Branches.

Except where noted, the Federal Records Center and the National Archives Field Branch in a particular city share the same address and same business hours. Some of the National Archives Field Branches may offer extended research room hours on selected evenings and Saturdays. More specific information on extended hours and services offered during those hours is available from each branch. The hours listed in this section are the minimum hours that each National Archives Field Branch is normally open.

(a) 380 Trapelo Road, Waltham, MA 02154. Hours: 8 a.m. to 4 p.m., Monday through Friday.

(b) Bldg. 22, Military Ocean Terminal, Bayonne, NJ 07002-5388. Hours: 8 a.m. to 4 p.m., Monday through Friday.

(c) 5000 Wissahickon Avenue, Philadelphia, PA 19144 (Federal Records Center only). Hours: 8 a.m. to 4 p.m., Monday through Friday.

(d) 9th and Market Streets, Room 1350, Philadelphia, PA 19107 (National Archives Field Branch only). Hours: 8 a.m. to 5 p.m., Monday through Friday.

(e) 1557 St. Joseph Avenue, East Point, GA 30344. Hours: 8 a.m. to 4 p.m., Monday through Friday.

(f) 3150 Springboro Road, Dayton, OH 45439 (Federal Records Center only). Hours: 8 a.m. to 4 p.m., Monday through Friday.

(g) 7358 South Pulaski Road, Chicago, IL 60629. Hours: 8 a.m. to 4 p.m., Monday through Friday.

(h) 2312 East Bannister Road, Kansas City, MO 64131. Hours: 8 a.m. to 4 p.m., Monday through Friday.

(i) 501 West Felix Street, Fort Worth, TX. Mailing address: P.O. Box 6216, Fort Worth, TX 76115. Hours: 8 a.m. to 4 p.m., Monday through Friday.

(j) Denver Federal Center, Building 48, Denver, CO. Mailing address: P.O. Box 25307, Denver, CO 80225. Hours: 8 a.m. to 4 p.m., Monday through Friday.

(k) 1000 Commodore Drive, San Bruno, CA 94066. Hours: 8 a.m. to 4 p.m., Monday through Friday.

(l) 24000 Avila Road, Laguna Niguel, CA. Mailing address: P.O. Box 6719, Laguna Niguel, CA 92677-6719. Hours: 8 a.m. to 4 p.m., Monday through Friday.

(m) 6125 Sand Point Way, Seattle, WA 98115. Hours: 8 a.m. to 4 p.m., Monday through Friday.

PART 1280—PUBLIC USE OF FACILITIES

6. The table of contents of Part 1280 is revised to read as follows:

Subpart A—General provisions.

Sec.
1280.1 Applicability.
1280.3 Conformity with signs and directions.
1280.4 Vehicular and pedestrian traffic.
1280.5 Dogs and other animals.
1280.6 Inspection.
1280.7 Distribution of handbills and other materials.
1280.8 Prohibited activities.

Subpart B—National Archives Building

1280.10 Admittance of visitors to National Archives Exhibition Hall.
1280.12 Photographing documents in exhibit areas.
1280.14 Artificial lighting in public areas.
1280.16 National Archives Library.
1280.18 National Archives Theater and conference rooms.

1280.20 Application for outside use of National Archives Theater and conference rooms.
1280.22 Archivist's Reception Room.
1280.24 Application for outside use of the Archivist's Reception Room.

Subpart C—Facilities in Presidential Libraries

1280.40 Museum areas.
1280.42 Auditoriums and other public spaces.
1280.44 Supplemental rules.
1280.46 Book collections.
1280.48 Photographing documents.

Subpart D—Federal Records Centers and National Archives Field Branches

1280.60 Use of conference rooms.
1280.62 Restrictions on use.

6a. The authority citation for Part 1280 continues to read as follows:

Authority: 44 U.S.C. 2104(a).

7. Section 1280.1 is designated as Subpart A and existing Subparts A through C are redesignated as Subparts B through D. The title of the redesignated Subpart D is revised to read *"Subpart D—Federal Records Centers and National Archives Field Branches"*.

8. Section 1280.1 is revised to read as follows:

§ 1280.1 Applicability.

All persons using the facilities in the National Archives Building and the Presidential Libraries (referred to in this Subpart as "NARA property") are subject to the provisions of Subpart A of this Part. Persons using other NARA facilities are subject to the GSA regulations, Conduct on Federal Property, at 41 CFR Subpart 101-20.3.

9. Sections 1280.3 through 1280.8 are added to Subpart A to read as follows:

§ 1280.3 Conformity with signs and directions.

Persons in and on NARA property shall at all times comply with official NARA signs (e.g., restrictions on smoking or parking) and with the directions of the guards and NARA staff.

§ 1280.4 Vehicular and pedestrian traffic.

(a) The blocking of entrances, driveways, walks, loading platforms, or fire hydrants on NARA property is prohibited.

(b) Except in emergencies, members of the public may not park in spaces reserved for holders of NARA parking permits.

§ 1280.5 Dogs and other animals.

Dogs and other animals, except seeing eye dogs or other guide dogs, may not be brought upon NARA property without permission of the appropriate NARA official.

§ 1280.6 Inspection.

Packages, briefcases, and other containers brought into, while on, or being removed from the NARA property are subject to inspection.

§ 1280.7 Distribution of handbills and other materials.

Distribution or posting of handbills, flyers, pamphlets or other materials on bulletin boards or elsewhere is prohibited on NARA property, except in those spaces designated by NARA as public forums. This prohibition also does not apply to displays or notices distributed as part of authorized Government activities or bulletin boards used by employees to post personal notices.

§ 1280.8 Prohibited activities.

(a) *Gambling.* Participating in games for money or other personal property or the operating of gambling devices, the conduct of a lottery or pool, or the selling or purchasing of numbers tickets, in or on NARA property is prohibited. This prohibition does not apply to the vending or exchange of chances by licensed blind operators of vending facilities for any lottery set forth in a State law and conducted by an agency of a State as authorized by section 2(a)(5) of the Randolph-Sheppard Act (20 U.S.C. 107, et. seq.).

(b) *Illegal drugs.* The possession or use of illegal drugs on NARA property and/or entering on NARA property under the influence of alcohol or any illegal drug is prohibited.

(c) *Weapons and explosives.* No person entering or while on NARA property shall carry or possess firearms, other dangerous or deadly weapons, either openly or concealed, except for official purposes. No person entering or while on NARA property shall carry or possess explosives, or items intended to be used to fabricate an explosive or incendiary device.

(d) *Soliciting, vending, and debt collection.* Charitable or commercial or political soliciting, vending of all kinds, displaying or distributing commercial advertising, or collecting private debts on NARA property is prohibited. National or local drives for funds for welfare, health or other purposes which are authorized by the Office of Personnel Management and approved by NARA are exempt from this paragraph.

(e) *Disturbances.* Loitering, disorderly conduct, or other conduct on NARA property which creates a loud or unusual noise or a nuisance; which unreasonably obstructs the usual use of entrances, foyers, lobbies, corridors, offices, elevators, stairways, or parking areas; which otherwise impedes or disrupts the performance of official duties by Government employees; or which prevents the general public from obtaining NARA-provided services in a timely manner, is prohibited.

(f) *Other.* The improper disposal of rubbish on NARA property; the willful destruction of or damage to NARA property; the theft of property; the creation of any hazard on NARA property to persons or things; or the throwing of any kind of articles from or at a NARA building is prohibited.

10. Section 1280.12 is revised to read as follows:

§ 1280.12 Photographing documents in exhibit areas.

Photographing documents or exhibits in the Exhibition Hall, the Pennsylvania Avenue lobby, or any other exhibit area in the National Archives Building is permitted without supplemental artificial light sources, or tripods or similar equipment at any time. However, photographs may not be taken on the steps or landing leading to the Declaration of Independence, the Constitution, and the Bill of Rights.

11. In § 1280.14, the introductory text and paragraphs (a) and (b) are revised to read as follows:

§ 1280.14 Artificial lighting in public areas.

Supplemental artificial lighting devices may be used with prior approval of the Public Affairs Officer (NSI) when filming documents in public areas of the National Archives Building subject to the following restrictions:

(a) Facsimiles shall be used in place of the Declaration of Independence, the Constitution, or the Bill of Rights if supplemental artificial lighting is to be used. When high intensity lighting is used, all other exhibited documents that fall within the boundaries of such illumination must be covered or replaced by facsimiles. If approval is granted for filming facsimiles or for filming other exhibited documents, a high intensity light source may not expose any exhibited item to more than 500 foot-candles nor be used to illuminate any one item for more than five minutes. The use of high intensity lighting in an exhibit area may not exceed one hour.

(b) Ladders, scaffolding, and tripods may be used after normal hours, but must be kept at a distance from documents greater than the height of the equipment.

* * * * *

12. Section 1280.20 is amended by revising paragraph (f) to read as follows:

§ 1280.20 Application for outside use of National Archives Theater and conference rooms.

* * * * *

(f) Smoking within the theater and conference rooms is prohibited. Smoking is allowed only in designated smoking areas.

* * * * *

13. Section 1280.22 is added to Subpart B to read as follows:

§ 1280.22 Archivist's Reception Room.

The Archivist's Reception Room is primarily intended for meetings and other functions of NARA. The Archivist may sponsor, co-sponsor or, if the room is not scheduled for use by NARA, authorize the use of the room by other Federal agencies for official government functions, or by private individuals and organizations. Such use by private individuals and groups must be for the benefit of or in connection with the archival and records activities administered by the National Archives and Records Administration and must be consistent with the public perception of the National Archives as a research and cultural institution. The National Archives Trust Fund Board refurbished the Archivist's Reception Room from private gifts and donations. In order to maintain this Room in its present condition, as well as to cover the cost of additional cleaning, guard and other required services, the use of this Room by private individuals and organizations requires a donation to the National Archives Trust Fund. Federal agencies using the room for official government functions shall reimburse NARA only for the cost of additional guard and NARA staff services. The Archivist's Reception Room shall not be used to promote commercial enterprises or products or for political, sectarian, or similar purposes. Use of the Room will not be authorized for any organization or group that engages in discriminatory practices proscribed by the Civil Rights Act of 1964, as amended.

14. Section 1280.24 is added to Subpart B to read as follows:

§ 1280.24 Application for outside use of the Archivist's Reception Room.

(a) Applications for use of the Archivist's Reception Room shall be submitted in writing by the private individual or by the head of the requesting organization or the duly authorized representative of the organization, normally 30 days in advance. Applications for use shall be submitted to the Assistant Archivist for Public Programs (NE), National Archives and Records Administration, Washington, DC 20408 and shall include the following:

(1) The name of the requesting organization or individual;

(2) The date and hours of contemplated use;

(3) A description of the purpose, anticipated number of attendees, and the name of the individual designated to serve as host and responsible official for the event;

(4) Whether audiovisual services are required (these must be provided by NARA on a reimbursible basis);

(5) Samples of any literature, folders, or posters to be distributed or exhibited.

(b) A donation to the National Archives Trust Fund to cover the costs involved in the maintenance and use of the Room is needed. Further information may be obtained from the Assistant Archivist for Public Programs.

(c) The Room is available from 8:00 a.m. until 9:30 p.m., Monday through Friday, and from 9:00 a.m. until 4:30 p.m. on Saturday. Use of the room at other hours requires the special approval of the Archivist. A NARA staff member must be available at all times when the room is in use.

(d) Those using the Room must obtain approval from NARA before distributing or displaying any item and must not misrepresent their identity to the public nor conduct any activities in a misleading or fraudulent manner. If any notice or advertisement is to mention the National Archives or incorporate its seal, the approval of the Archivist of the United States is required.

(e) Those using the Room must provide persons as needed to register guests, distribute approved literature, name tags, or similar material.

(f) NARA must approve in advance the use of a caterer who will bring beverages, food, or equipment into the National Archives Building. NARA must approve any equipment or decorations to be used and any entertainment to occur in the National Archives Building.

(g) No Government property shall be destroyed. displaced, or damaged by the user. The user must take prompt action to replace, return, restore, repair or repay NARA for any damage caused to Government property during the use of NARA facilities.

15. Section 1280.42 is amended by revising paragraph (a) to read as follows:

§ 1280.42 Auditoriums and other public spaces.

(a) Presidential library auditoriums and other public spaces in the library buildings and the library grounds are intended primarily for the use of the library in carrying out its programs. These areas may also be used by other organizations for lectures, seminars, meetings, and similar activities when these activities are sponsored, cosponsored, or authorized by the Library to further the library's interests, and when such activities will not interfere with the normal operation of the library. Any activities sponsored, cosponsored, or authorized by the library must be related to the mission and programs of the library and must be consistent with the public perception of the library as a research and cultural institution. Application for such use shall be made in writing to the library director (see § 1253.3 of this chapter for the address).

* * * * *

16. Section 1280.44 is revised to read as follows:

§ 1280.44 Supplemental rules.

Library directors may establish appropriate supplemental rules governing use of Presidential libraries and adjacent buildings and areas under NARA control.

17. Section 1280.60 is revised to read as follows:

§ 1280.60 Use of conference rooms.

Conference rooms in Federal Records Centers and National Archives Field Branches will be used for official meetings and for conferences sponsored by NARA. When not required for such use, assignments for other purposes during normal working hours may be made. Applications for such use will be approved only if the purpose for which it is requested is educational or is related to NARA programs. Applications for such use shall be made to the Federal Records Center Director or the National Archives Field Branch Director (see § 1253.6 of this chapter for the address).

Dated: June 16, 1987.

Frank G. Burke,

Acting Archivist of the United States.

[FR Doc. 87-14309 Filed 6-24-87; 8:45 am]

BILLING CODE 7515-01-M

VETERANS ADMINISTRATION

38 CFR Part 1

Salary Offset, Federal Claims Collection

AGENCY: Veterans Administration.

ACTION: Final regulation; correction.

SUMMARY: In the Federal Register of Friday, January 16, 1987, (52 FR 1904-

1908) the Veterans Administration (VA) adopted a rule concerning salary offset, Federal claims collection (38 CFR Part 1). This notice is to correct three typographical errors in that rule.

EFFECTIVE DATE: February 17, 1987.

FOR FURTHER INFORMATION CONTACT: Peter Mulhearn, Special Assistant, Fiscal Systems, Office of Budget and Finance (Controller), Veterans Administration, 810 Vermont Avenue NW., Washington, DC 20420 (202) 233-3405.

List of Subjects in 38 CFR Part 1

Administrative practice and procedure, Claims, Veterans.

Dated: June 19, 1987.

Priscilla B. Carey,

Chief, Directives Management Division.

PART 1—[CORRECTED]

FR document 87-975, published in the **Federal Register** of January 16, 1987, on pages 1904 through 1908, is corrected as follows:

§ 1.980 [Corrected]

1. On page 1905 in § 1.980, third column, seventh line of paragraph (f), change the words "38 CFR 1.1900" to "38 CFR 1.900."

§ 1.981 [Corrected]

2. On page 1905, in § 1.981, third column, in the third line of paragraph (a)(3), change the words "38 U.S.C. 610" to "28 U.S.C. 610."

§ 1.987 [Corrected]

3. On page 1907, in § 1.987, middle column, in the third line of paragraph (a), change the word "to" to "of."

[FR Doc. 87-14376 Filed 6-24-87; 8:45 am]

BILLING CODE 8320-01-M

---

38 CFR Part 17

State Home Facilities

AGENCY: Veterans Administration.

ACTION: Final regulations.

SUMMARY: The Veterans Administration (VA) is amending its medical regulations (38 CFR Part 17) to implement a number of statutory changes. Specifically, these regulations assist States in the acquisition of existing facilities for use as State homes; defer approval of applications from States that have been notified of the availability of Federal funds if by July 1 the State does not have adequate financial support; establish a priority system for awarding construction and acquisition grants; and implement the Single Audit Act of 1984. Finally, certain requirements are being deleted because they are outdated and others are being updated and clarified.

EFFECTIVE DATE: June 12, 1987.

FOR FURTHER INFORMATION CONTACT: F. Brent Baker, State Home Program Coordinator, Department of Medicine and Surgery, Veterans Administration, 810 Vermont Avenue NW., Washington, DC 20420, (202) 233-3854.

SUPPLEMENTARY INFORMATION: On pages 10907 through 10912 of the **Federal Register** of April 6, 1987, the VA published proposed regulations to: implement section 105 of the Veterans' Health Care Act of 1984 (Pub. L. 98-528) which enables the VA to participate in up to 65 percent of the cost of acquisition of an existing facility or facilities by a State for use as a State home; establish regulations for deferring approval of applications if a State does not have adequate financial support by July 1 of the fiscal year in which the VA notifies the State of the availability of Federal funds as required by the Veterans' Administration Health Care Amendments of 1985 (Pub. L. 99-166); and promulgate the regulations needed to accord priority to State home construction and acquisition grant projects as required by section 224 of the Veterans' Benefits Improvements and Health Care Authorization Act of 1986 (Pub. L. 99-576). At the same time, the VA is providing a regulation to comply with the Single Audit Act of 1984 (Pub. L. 98-502).

Interested parties were invited to comment on the proposed regulations. Four comments were received. Two comments were from veterans service organizations and two comments were from State government agencies. One of the comments was favorable and the other three comments addressed, among other items, the equity of the new priority system. The issues addressed in these three comments concerned the specific legislation establishing the order of priority for awarding grants over which the VA has no control.

One comment addressed the fact that long-pending preapplications on file with the VA may lack sufficient priority status under the new priority procedure to the extent that they may never be funded. Also, these preapplications will not be considered on July 1, 1987, unless the States submit formal applications before that date. It was recommended that an interim procedure be developed for these projects to exempt them from the new priority system. Further, projects will have to be awarded priority each July 1 unless a grant has been awarded; it was thus recommended that once a State has been notified of the availability of Federal funds that it not be accorded priority again. This comment also recommended that the regulations establish a mechanism for awarding grants between July 1 and October 1, 1987, which is the most active time for grant awards. Finally, the comment recommended that VA closely monitor the quality of physical structures acquired by States with VA grants.

Since the new law does not permit VA to exempt preapplications and applications from the July 1 priority list or to provide an interim mechanism for awarding grants during the period of July 1 through September 30, 1987, no changes have been made in the regulations to address these comments. The regulations do provide standards of construction which must be met for VA participation in the acquisition of State home facilities, and VA will carefully monitor these standards prior to participation in the acquisition/renovation of existing facilities for use as State homes.

Another comment noted that Pub. L. 99-166 which requires deferral of certain applications without State funds by July 1 would present a conflict for Directors of State Programs with their legislatures and their veteran population. The comment stated that this conflict would be precipitated by the requirement that funds be authorized by the legislature each year, the VA's inability to fund all present proposals and the re-prioritization of requests each year. A State could be in total compliance one year and because the VA is underfunded, the State is unable to proceed with its project. The next year the VA again re-prioritizes all requests and again no matching grant is available to the State. It is recommended that a carryover be considered for States which meet the initial criteria and through no fault of their own are unable to receive Federal matching funding. Since the law provides no mechanism for the carryover of projects or exempting them from the priority list, no changes have been made in the regulations.

The final comment noted that the Federal participation has been set at 65 percent of the cost of acquisition for existing facilities, and this requires a State to pay over one-third of the cost. Since this rate was established by law, there has been no change in the regulations. The comment also noted that the new priority system will give wealthier States or States with legislatures that meet more frequently an advantage in participating and that the new priority system penalizes less wealthy States whose veterans may

have the greatest need for nursing home care. Since the order of priorities is established by law, there has been no change in the regulations based on these comments.

As we stated in the preamble to the proposed regulations, provisions of 38 CFR Part 17 regarding the VA's State Home Program need updating and revising to implement pertinent sections of the public laws already mentioned.

In authorizing VA to award grants to States for the acquisition of existing facilities for use as State veterans homes (Pub. L. 98-528), Congress prohibited the cost of acquisition plus renovation from exceeding the estimated cost of an equivalent new State home facility. Purchase of land is excluded. This new authority enables the conversion of existing facilities into State homes and avoids the cost and time associated with new construction. Public Law 99-166 requires the VA to defer an application for which Federal funds are available and which meets all other requirements for a grant if by July 1 of the Federal fiscal year in which VA notifies the State of available funds, the State has not provided adequate financial support. The funds resulting from deferred projects may be applied to eligible nursing home and domiciliary projects which would not have been funded during the fiscal year but for the deferral, which will meet all grant requirements by the end of the fiscal year, and to which the Administrator has accorded the highest priority. Section 224 of Pub. L. 99-576 requires the VA to accord the priority to applications for State veterans home grants and requires VA to establish a priority list by July 1 of each calendar year for State home projects for which applications have been submitted to the VA. Grants will be awarded from the list during the next Federal fiscal year beginning October 1 of the calendar year in which the priority list was made, subject to the availability of Federal funds. The amendment will implement the requirements in the law that the VA accord priority to projects described in applications for Federal assistance for State veterans nursing home and domiciliary projects in the following order:

(1) Projects for which States have made available adequate State financial support (matching funds) so that the projects can proceed upon approval of the grant without the need for further State action to make funds available;

(2) Projects from States which have not received VA grant assistance for the construction or acquisition of State veterans home facilities;

(3) Projects from States which the Administrator determines to have a greater need for the State veterans nursing home or domiciliary beds than other States; and

(4) Projects meeting other criteria the Administrator deems appropriate.

In developing the regulations to implement this priority framework, it was necessary to anticipate the likelihood that several applications might be accorded the same priority within a priority group. To assure a predictable, equitable mechanism for resolving questions of relative ranking among projects, the regulations establish a framework for determining such ranking. For example, to the extent that several projects are placed in "Priority Group 1" based on having made sufficient State funds available, these projects would be ranked by applying the criteria applicable to the next lower priority group (i.e., priority group 2). Highest priority among them would be given to projects from a State or States which had not previously received a grant for construction or acquisition under the program. If it becomes necessary to invoke a second tie-breaker among those projects in Priority Group 1, the regulations call for the VA to apply the criteria of the next lower priority group, i.e., Priority Group 3, so that priority would be given to projects from States determined to have a greater need for State veterans nursing homes or domiciliary beds than other States.

These regulations are hereby adopted as proposed, with the exception of minor editorial changes.

These final regulations are considered nonmajor under the criteria of Executive Order 12291, Federal Regulation, on the basis that they will not have an annual effect on the economy of $100 million or more, they will not result in major increases in costs or prices for consumers, individual industries, Federal, State or local government agencies, or geographic regions, nor will they have significant adverse effects on competition, employment, investment, productivity, innovation, or on the ability of the United States-based enterprises to compete with foreign-based enterprises in domestic or export matters.

The Administrator of Veterans Affairs certifies that these final regulations will not have a significant economic impact on a substantial number of small entities as they are defined in the Regulatory Flexibility Act (RFA), 5 U.S.C. 601-602. Pursuant to 5 U.S.C. 605(b), these final regulations are exempt from the initial and final regulatory flexibility analyses requirements of sections 603-604. The reason for this certification is that these final regulations will affect only construction or acquisition grants for State Veterans Homes. They will, therefore, have no significant impact on small entities (i.e., small business, small private and nonprofit organizations, and small governmental jurisdictions).

The catalog of Federal Domestic Assistance program numbers are 64.014, 64.015, 64.016 and 64.005.

List of Subjects in 38 CFR Part 17

Alcoholism, Claims, Dental health, Drug abuse, Foreign relations, Government contracts, Grant programs—health, Grant programs—veterans, Health care, Health facilities, Health professions, Incorporation by reference, Medical and dental schools, Medical devices, Medical research, Mental health programs, Nursing homes, Philippines, Veterans.

Approved: June 11, 1987.

Thomas K. Turnage,

Administrator.

PART 17—[AMENDED]

38 CFR Part 17, MEDICAL, is amended as follows:

1. Section 17.168 is added to read as follows:

§ 17.168 Audit of State homes.

The State must comply with the Single Audit Act of 1984 (Part 41 of this title) (31 U.S.C. 7501-7507).

2. The center heading and note which precede § 17.170 are revised to read as follows:

Grants to States for Construction or Acquisition of State Home Facilities

Note.—The purpose of the regulations concerning grants to States for construction or acquisition of State home facilities is to effectuate the provisions of 38 U.S.C. 5031-5037 and to assist the several States to construct or acquire State home facilities for furnishing domiciliary or nursing home care to veterans, and to expand, remodel, or alter existing buildings for furnishing domiciliary, nursing home or hospital care to veterans in State homes.

3. In § 17.170 the introductory text, paragraphs (d) and (e) are revised and paragraphs (f), (g), (h), (i), and (j) are added to read as follows:

§ 17.170 Definitions.

For the purpose of the regulations concerning grants to States for construction or acquisition of State home facilities:

* * * * *

(d) The term "cost of construction" means the amount which the

Administrator determines to be necessary for a State Home construction project, including architect fees, supervision and site inspection services, printing and advertising costs, but excluding land acquisition costs. (38 U.S.C. 5031(d))

(e) The term "State agency" means that State agency or instrumentality of a State designated by a State as authorized to apply for assistance to construct or acquire State home facilities for veterans and thereafter administer those facilities.

(f) The term "acquisition" means the purchase of a facility for use as a State veterans home for the provision of domiciliary and/or nursing home care to veterans. An acquisition includes any remodeling or alteration needed to meet existing standards.

(g) The term "cost of acquisition" means the amount which the Administrator determines to be necessary to acquire and renovate a facility for the provision of domiciliary or nursing home care as a State home.

(h) As used in connection with a request from a State for a grant to assist in the construction or acquisition of a State veterans home:

(1) The term "preapplication" means the State's submission to the Administrator of a preapplication for Federal Assistance on Standard Form 424 with an accompanying space program and schematics for the project; and

(2) The term "application" means the submission to the Administrator of an application for Federal Assistance for a project on Standard Form 424 after the Veterans Administration has reviewed the State's preapplication for the project and informed the State that it is a feasible project for Federal participation.

(i) The term "life safety project" means a State veterans nursing home or domiciliary project which would remedy an existing condition which has been cited by the veterans Administration, a State or local agency (including a Fire Marshal), or the Joint Commission on Accreditation of Hospitals, as threatening to the lives or safety of patients within the facility.

(j) The term "renovation project" means a project to expand, remodel or alter a State veterans nursing home or domiciliary which is not a life safety project and does not result in the addition of domiciliary or nursing home beds.

4. In § 17.171, paragraph (a) is revised to read as follows:

§ 17.171 Maximum number of nursing home beds required for veterans by State.

(a) For purposes of these regulations, appendix A prescribes the maximum number of beds which may be necessary to provide adequate nursing home care and domiciliary care to veterans residing in each State. When the nursing home beds to be constructed or acquired in a State will result in more than 2½ beds per 1,000 veterans, the State shall provide sufficient justification for the Administrator to determine that the additional beds are required in that State. In making this determination, the Administrator shall consider the following factors:

* * * * *

5. Section 17.172 is revised to read as follows:

§ 17.172 Scope of grants program.

Subject to the availability of an appropriation, a grant may be made to a State which has submitted an application for assistance to construct (or to acquire) State home facilities (if the application has been approved by the Administrator) as prescribed in §§ 17.170 through 17.177.

6. In § 17.173, paragraph (e) is redesignated as paragraph (h); the introductory text of paragraph (a), paragraphs (a)(1), (a)(4), (b)(5), (b)(8), (c) and (d) are revised; new paragraphs (a)(5), (b)(9), (b)(10), (d), (e), (f), and (g) are added to read as follows:

§ 17.173 Applications with respect to projects.

(a) A State desiring to receive Federal assistance for construction or acquisition of a State home facility shall submit to the Administrator a preapplication (if the need for Federal funding exceeds $100,000) and an application for such assistance in compliance with the uniform requirements for grant-in-aid to State and local governments prescribed in the Office of Management and Budget Circular No. A-102, Revised. The applicant will submit as part of the application or as an attachment thereto:

(1) The amount of the grant requested with respect to such project which may not exceed 65 percent of the estimated cost of construction or acquisition and construction of such project.

* * * * *

(4) Any comments or recommendations made by appropriate State (and areawide) clearinghouses pursuant to policies outlined in Executive Order 12372, Intergovernmental Review of Federal Programs (Part 40 of this title).

(5) If construction outside the walls of an existing structure will involve more than 75,000 net square feet (NSF), the application shall include an environmental assessment to determine if an Environmental Impact Statement is necessary for compliance with section 102(2)(c) of the National Environmental Policy Act of 1969. The Environmental Assessment shall briefly describe the possible beneficial and/or harmful effects which the project may have on the following impact categories: (A) Transportation, (B) Air quality, (C) Noise, (D) Solid waste, (E) Utilities, (F) Geology (soils/hydrology/flood plains), (G) Water quality, (H) Land use, (I) Vegetation, wildlife, acquatic, ecology/wetlands, (J) Economic activities, (K) Cultural resources, (L) Aesthetics, (M) Residential population, (N) Community services and facilities, (O) Community plans and projects, and (P) Other. If an adverse environmental impact is anticipated, then the action taken to minimize the impact should be explained in the environmental assessment.

(b) * * *

(5) The rates of pay for laborers and mechanics engaged in construction of the project will not be less than the prevailing local wage rates for similar work as determined in accordance with the Act of March 3, 1931 (40 U.S.C. 276a through 276a-5) known as the Davis-Bacon Act. (38 U.S.C. 5035(a)(8))

* * * * *

(8) The structures constructed will be of fire, earthquake, and other natural disaster resistant construction. (38 U.S.C. 5005)

(9) In the case of a project for acquisition of a facility, the State agency must provide reasonable assurance that the total cost of acquisition of the facility, including any expansion, remodeling and alteration to meet all building requirements and codes, and for all other purposes, shall not be greater than the estimated cost of construction of an equivalent new State home facility. (38 U.S.C. 5035(a)(9))

(10) An audit will be performed in compliance with the Single Audit Act of 1984 (See Part 41 of this title). (31 U.S.C. 7501-7507)

(c) Upon receipt of an application for a grant for a project for construction or acquisition of a State veterans home, the Administrator or designee shall:

(1) Determine whether the application meets the requirements of 38 U.S.C. 5035 and §§ 17.170 through 17.177 and Appendix A to § 17.171 of this title and whether the application contains sufficient information for the Administrator to establish its priority. The Administrator shall consider the following factors when making a

determination for purposes of this section that a project is primarily a State veterans nursing home, domiciliary or hospital project:

(i) The number of State veterans nursing home, domiciliary, and/or hospital beds that would be constructed or acquired by the project;

(ii) The amount of nursing home, domiciliary, or hospital project space that will result from the construction or acquisition project;

(iii) The estimated number of veteran patients who would benefit from the construction or acquisition project. (38 U.S.C. 5035(b))

(2) Notify the State submitting the application whether the application conforms with such requirements, and, if it does not, notify the State

(i) Of the actions necessary to bring the application into conformance with those requirements; and

(ii) If the application provides insufficient information for the Administrator to establish its priority under subparagraph (1) of this paragraph; and

(3) If such application provides sufficient information for the Administrator to establish its priority determine the priority of the project described in the application in relation to all other projects in accordance with the criteria set forth in this paragraph. The priority of any project is subject to change upon receipt of information concerning that or any other project. In establishing a project's priority, the Administrator shall rank projects from the highest to lowest priority in the order of priority groups set forth in this paragraph, giving the projects in Group 1 the highest priority and the projects in Group 6 the lowest. Except as otherwise provided, where more than one project is ranked in a single priority group, the Administrator shall rank those projects by applying the criteria applicable to the next lower priority group. Where such ranking results in more than one project being given the same priority, the Administrator shall rank those projects, except as otherwise provided, in accordance with the criteria applicable to the next lower priority group until all projects are ranked with a different priority.

The priority groups are:

(A) *Priority Group 1:* A State veterans nursing home or domicillary project for which a State, in the judgment of the Administrator, has made sufficient funds available for construction and/or acquisition so that the project may proceed upon approval of the grant which the State has requested without further action required by the State to make such funds available for that purpose, shall be accorded first priority. A State's enactment into law of a bill appropriating the State's (matching) funds for the project will be accepted by the Administrator as demonstrating that the State has made sufficient funds available for construction and/or acquisition of the project.

(B) *Priority Group 2:* A State veterans nursing home or domiciliary project from a State which has not received a construction or acquisition grant from the Administrator under 38 U.S.C. 5035 shall be accorded second priority.

(C) *Priority Group 3:* A State veterans nursing home or domiciliary bed producing or non-bed producing project from a State, which the Administrator determines, pursuant to this paragraph, to have a greater need for State veterans nursing home or domiciliary beds than other States which have submitted applications, shall be accorded third priority. The Administrator shall base such determinations on the Administrator's calculation, pursuant to this paragraph, of the State's unmet need for such beds. A State which has submitted an application for a project which the Administrator determines to be primarily a nursing home project will be deemed to have a greater need for State veterans nursing home beds than other States if the Administrator determines that the State has an unmet need for such beds of between 91 percent and 100 percent. The Administrator shall determine a State's unmet need for State veterans nursing home beds by dividing the number of that State's nursing home beds authorized by the Veterans Administration in State veterans Homes as of June 15 of the current year by the number of beds needed to provide adequate nursing home care to veterans residing in that State as prescribed by the Administrator in Appendix A. The quotient, expressed as a percentage will be subtracted from 100 percent. The difference constitutes the State's unmet need for State veterans nursing home beds for purposes of this section. The Administrator shall determine a State's unmet need for domiciliary beds by dividing the number of that State's domiciliary beds authorized by the Veterans Administration as of June 15 of the current year by the number of beds needed to provide adequate domiciliary care to veterans residing in that State prescribed by the Administrator in Appendix A. The quotient, expressed as a percentage will be subtracted from 100 percent. The difference constitutes the State's unmet need for State veterans domiciliary beds for purposes of this section.

(D) *Priority Group 4:* A State veterans nursing home or domiciliary project, which is not assigned a higher priority under this section, shall be accorded fourth priority. If there is more than one project in this priority group, the Administrator shall assign each project a value as set forth in the following table in accordance with the Administrator's determination of the type of project:

Type of project	Value
Life-safety project for nursing home facility	10
Project resulting in the construction or acquisition of nursing home beds	10
Life-safety project for domicilliary facility	9
Project resulting in the construction or acquisition of domiciliary beds	8
Nursing home renovation project	6
Domiciliary renovation project	4

If the Administrator determines that a project could be included in two or more of the above-listed types so that the project, in the judgment of the Administrator, cannot be accurately characterized as to type by reference to any single type listed above, the Administrator shall determine the numerical value to be assigned a project by calculating the average of all the numerical values associated with all types of projects in which the project could be included. The Administrator shall rank projects in accordance with the numerical values assigned, with the highest priority being assigned to the project with the highest numerical valuation. Where this results in two or more projects with the same priority, these projects shall be ranked in the order in which the Administrator received the State's preapplication for that project giving highest priority to the project for which a preapplication was received first. If a preapplication was not received by the Administrator for a project, the project shall be ranked with other projects using the date on which the Administrator received the application for the projects.

(E) *Priority Group 5:* A project which is primarily designed to renovate a State veterans hospital facility but which would not expand a State's capacity to furnish hospital care in a State veterans home shall be accorded fifth priority. Where more than one project is ranked in this priority group, the Administrator shall rank them in the order in which the Administrator received the State's preapplication for the project and shall give highest priority to the project for which a preapplication was received first. If a preapplication was not received by the Administrator for a project, the project shall be ranked with other projects using the date on which

the Administrator received the application for the project.

(F) *Priority Group 6:* A hospital project which would expand a State's capacity to furnish hospital care in a State veterans home shall be accorded no priority. Where more than one such project has been submitted, the Administrator shall rank them in the order in which the Administrator received the State's preapplication for the projects and shall assign the lowest ranking to the project for which a preapplication was received last. If a preapplication was not received by the Administrator for a project, the project shall be ranked with other projects using the date on which the Administrator received the application for the project. (38 U.S.C. 5035(b))

(d) The Administrator shall establish as of July 1 of each year a list of projects in the order of their priority on June 15 of that year as determined pursuant to paragraph (c) of this section. To the extent that Federal funds are available, the Administrator shall award grants in the order of their priority on this list during the fiscal year beginning on October 1 of the calendar year in which the list is made. Once the list is established for the purpose of awarding grants, the Administrator shall not add projects or change the list in any way except to delete a project at the request of the State which has applied for grant assistance for that project or upon the award by the Administrator of a grant for a project on the list. (38 U.S.C. 5035(b)(4))

(e)(1) The Administrator shall defer approval of an application that otherwise meets the requirements of 38 U.S.C. 5035, if the State which submitted the application does not, by July 1 of the Federal fiscal year in which the State is notified by the Assistant Chief Medical Director for Geriatrics and Extended Care of the availability of Federal funding for a grant for the project described in the application, demonstrate that the State has provided adequate financial support (matching funds) for such project. A State's enactment into law of a bill appropriating the State's share of funding for the project is acceptable to demonstrate that the State has provided adequate financial support (matching funds) for the project. The Veterans Administration will evaluate other types of assurances on a case by case basis.

(2) The Administrator will apply Federal funds, which had been intended for an application which has been deferred pursuant to subparagraph (1) of this paragraph to applications for State veterans nursing home or domiciliary projects that:

(i) Would not have been funded during the fiscal year but for the deferral,

(ii) Will meet the requirements of these regulations by the end of the Federal fiscal year, and

(iii) The Administrator has accorded the highest priority under paragraph (c) of this section.

(3) An application deferred in accordance with subparagraph (1) of this paragraph shall be accorded priority in any subsequent Federal fiscal year ahead of applications that had not been approved before the first day of the Federal fiscal year in which the deferred application was first approved. (38 U.S.C. 5035(b)(5))

(f) The amount of a grant under these regulations shall be paid to the applicant or, if designated by the applicant, the State home for which such project is being developed or any other agency or instrumentality of the applicant. Funds paid for an approved project will be used solely for carrying out such project as so approved. (38 U.S.C. 5035(d)(1))

(g) Any amendment of any application whether or not approved under paragraph (d) of this section will be subject to review and approval pursuant to the regulations concerning grants to States for construction of State home facilities in the same manner as an original application. (38 U.S.C. 5035(e))

* * * * *

7. Section 17.174 is revised to read as follows:

§ 17.174 Disallowance of a grant application and notice of a right to hearing.

(a) Before disapproving an application submitted under § 17.173, the Administrator shall notify the applicant of the opportunity for a hearing. The notice shall state:

(1) That the application's disapproval has been proposed;

(2) The basis for the proposed disapproval;

(3) That a request for a hearing should be received in writing by the Administrator within 40 days from the date of this notice;

(4) That failure of an applicant to request a hearing as provided for by this section or to appear at a hearing for which a date has been set shall be deemed a waiver of the opportunity for a hearing.

(b) If an applicant requests a hearing after the expiration of the 40-day period, the Administrator may accept the request.

(c) An applicant who requests a hearing under the procedures specified by this section shall be notified of the time and place for the hearing. If the time or place set is inconvenient for the applicant, the Administrator may change the time or place for the hearing.

(d) The Administrator shall conduct the hearing. The hearing will be informal. The rules of evidence will not be followed. Witnesses shall testify under oath or affirmation. A record or transcript of the hearing shall be made. The Administrator who conducts the hearing may exclude from consideration irrelevant, immaterial, or unduly repetitious evidence or testimony.

(38 U.S.C. 5035(c))

8. Section 17.175 is revised to read as follows:

§ 17.175 Recapture provisions.

(a) Except as provided in paragraph (b) of this section, if within 20 years after completion of any project with respect to which a grant has been made under the regulations concerning grants to States for construction or acquisition of State home facilities, a facility constructed or acquired as part of such project ceases to be operated by a State, a State home, or an agency or instrumentality of a State principally for furnishing domiciliary, nursing home or hospital care to veterans, the United States shall be entitled to recover from the State which was the recipient of the grant or from the then owner of such construction 65 percent of the current value of such facility (but in no event an amount greater than the amount of assistance provided for such under these regulations), as determined by agreement of the parties or by action brought in the district court of the United States for the district in which the facility is situated. (38 U.S.C. 5036)

(b) In the case of a grant where the Veterans Administration would provide between 50 and 65 percent of the estimated cost of expansion, remodeling, or alteration of an existing State Home facility recognized by the Veterans Administration in accordance with § 17.165, the Administrator may at the time of the grant provide for the following recovery periods associated with the following grant amounts.

Grant amount (dollars in thousands)	Recovery period (in years)
0-250	7
251-500	8
501-750	9
751-1,000	10
1,001-1,250	11
1,251-1,500	12
1,501-1,750	13
1,751-2,000	14
2,001-2,250	15
2,251-2,500	16
2,501-2,750	17
2,751-3,000	18
Over 3,000	20

(38 U.S.C. 5036)

If the magnitude of the Veterans Administration's contribution is below 50 percent of the estimated cost of the expansion, remodeling, or alteration of an existing State home facility recognized by the Veterans Administration in accordance with § 17.165, the Administrator may authorize a recovery period between 7 and 20 years depending on the grant amount involved and the magnitude of the project.

9. Section 17.176 is revised to read as follows:

§ 17.176 State to retain control of operations.

Neither the Administrator of Veterans Affairs nor any employee of the Veterans Administration shall exercise any supervision or control over the administration, personnel, maintenance, or operation of any State home constructed or acquired with assistance received under the regulations concerning grants to States for construction and acquisition of State home facilities except as prescribed in these regulations and § 17.167. (38 U.S.C. 5037)

§ 17.177 [Amended]

10. In § 17.177, paragraph (a)(4)(iii) is removed.

11. Appendix A is revised to read as follows:

Appendix A (See § 17.171)—State House Facilities for Furnishing Nursing Home Care

The maximum number of beds to provide adequate nursing home care and domiciliary care to veterans residing in each State not to exceed four beds per 1,000 veteran population for nursing home care and two beds per 1,000 veteran population for domiciliary care is established as follows:

State	Veteran population[1]	No. of beds: NHC	No. of beds: Dom
Alabama	436,000	1,744	872
Alaska	50,000	200	100
Arizona	383,000	1,532	766
Arkansas	270,000	1,080	540
California	3,003,000	12,012	6,006
Colorado	401,000	1,604	802
Connecticut	413,000	1,652	826
Delaware	77,000	308	154
District of Columbia	65,000	260	130
Florida	1,392,000	5,568	2,784
Georgia	632,000	2,528	1,264
Hawaii	99,000	396	198
Idaho	121,000	484	242
Illinois	1,348,000	5,392	2,696
Indiana	680,000	2,720	1,360
Iowa	354,000	1,416	708
Kansas	300,000	1,200	600
Kentucky	405,000	1,620	810
Louisiana	453,000	1,812	906
Maine	154,000	616	308
Maryland	544,000	2,176	1,088
Massachusetts	720,000	2,880	1,440
Michigan	1,117,000	4,468	2,234
Minnesota	525,000	2,100	1,050
Mississippi	245,000	980	490
Missouri	647,000	2,588	1,294
Montana	108,000	432	216
Nebraska	191,000	764	382
Nevada	137,000	548	274
New Hampshire	138,000	552	276
New Jersey	925,000	3,700	1,850
New Mexico	162,000	648	324
New York	1,951,000	7,804	3,902
North Carolina	660,000	2,640	1,320
North Dakota	69,000	276	138
Ohio	1,385,000	5,540	2,770
Oklahoma	397,000	1,588	794
Oregon	400,000	1,600	800
Pennsylvania	1,593,000	6,372	3,186
Rhode Island	126,000	504	252
South Carolina	351,000	1,404	702
South Dakota	80,000	320	160
Tennessee	543,000	2,172	1,086
Texas	1,732,000	6,928	3,464
Utah	155,000	620	310
Vermont	64,000	256	128
Virginia	664,000	2,656	1,328
Washington	628,000	2,512	1,256
West Virginia	243,000	972	486
Wisconsin	574,000	2,296	1,148
Wyoming	67,000	268	134

[1] Estimate as of March 31, 1983.

Source: Office of Reports and Statistics, VA. (Based on last available Bureau of the Census data.) (January 1984)

[FR Doc. 87-14375 Filed 6-24-87; 8:45 am]
BILLING CODE 8320-01-M

ENVIRONMENTAL PROTECTION AGENCY

40 CFR Part 52

[A-2-FRL-3223-1]

Approval and Promulgation of Implementation Plans; Revision to the State of New York Implementation Plan

AGENCY: Environmental Protection Agency.

ACTION: Final rule.

SUMMARY: This notice announces that the Environmental Protection Agency is accepting the December 29, 1986 submittal from the New York State Department of Environmental Conservation certifying that no "Natural Gas/Gasoline Processing Plants" or any "Air Oxidation Processes in any Synthetic Organic Chemical Manufacturing Industry" are located in the New York City metropolitan area. The intended effect of this action is to include this finding in 40 CFR Part 52, as justification for the fact that the New York State Implementation Plan does not contain reasonably available control technology requirements for these sources.

EFFECTIVE DATE: This action will be effective August 24, 1987, unless notice is received by July 27, 1987, that someone wishes to submit adverse or critical comments.

ADDRESSES: All comments should be addressed to: Christopher J. Daggett, Regional Administrator, Environmental Protection Agency, Region II Office, 26 Federal Plaza, New York, New York 10278.

Copies of the state submittal are available at the following addresses for inspection during normal business hours:

Environmental Protection Agency, Region II Office, Air Programs Branch, Room 1005, 26 Federal Plaza, New York, New York 10278.

Environmental Protection Agency, Public Information Reference Unit, 401 M Street, SW., Washington, DC 20460.

New York State Department of Environmental Conservation, Division of Air, 50 Wolf Road, Albany, New York 12233-0001.

FOR FURTHER INFORMATION CONTACT: William S. Baker, Chief, Air Programs Branch, Environmental Protection Agency, Room 1005, 26 Federal Plaza, New York, New York 10278, (212) 264-2517.

SUPPLEMENTARY INFORMATION: The Environmental Protection Agency (EPA) requires states with areas that could not attain the National Ambient Air Quality Standard for ozone by 1982 to adopt reasonably available control technology (RACT) for sources of volatile organic compounds (VOCs). EPA has published a series of Control Technique Guidelines (CTGs) which define RACT for various VOC source categories.

In response to the CTGs for Natural Gas/Gasoline Processing Plants and Air Oxidation Processes in any Synthetic Organic Chemical Manufacturing Industry (SOCMI), the New York State Department of Environmental Conservation (NYSDEC) has certified in a letter dated December 29, 1986 that no sources in these categories are located within the New York City metropolitan area, the only ozone nonattainment area remaining in the State. EPA is accepting

the NYSDEC's certifications. Consequently, the State does not need to adopt regulations for sources that do not exist in the non-attainment area.

EPA is codifying at 40 CFR 52.1683, a new section, the information that certifies that no Natural Gas/Gasoline Processing Plants or Air Oxidation Processes in any SOCMI are located in the New York City metropolitan area.

This notice is issued as required by section 110 of the Clean Air Act, as amended. The Administrator's decision regarding the approval of this plan revision is based on its meeting the requirements of section 110 of the Clean Air Act and 40 CFR Part 51.

EPA is publishing this SIP revision request without prior proposal because the EPA views this action as noncontroversial and anticipates no adverse comments. This action will be effective 60 days from the date of this **Federal Register** notice unless, within 30 days of its publication, notice is received that adverse or critical comments will be submitted.

If such notice is received, this action will be withdrawn before the effective date by publishing two subsequent notices. One notice will withdraw the final action and another will begin a new rulemaking by announcing a proposal of the action and establishing a comment period. If no such comments are received, the public is advised that this action will be effective 60 days from today. (See 47 CFR 27073 dated June 23, 1983).

Under 5 U.S.C. 605(b), I certify that this SIP revision will not have a significant economic impact on a substantial number of small entities. (See 46 FR 8709.)

The Office of Management and Budget has exempted this rule from the requirements of section 3 of Executive Order 12291.

Under section 307(b)(1) of the Act, petitions for judicial review of this action must be filed in the United States Court of Appeals for the appropriate circuit within 60 days from date of publication. This action may not be challenged later in proceedings to enforce its requirements (See 307(b)(2)).

List of Subjects in 40 CFR Part 52

Air pollution control agency, Ozone, Incorporation by reference.

Note: Incorporation by Reference of the State Implementation Plan for the State of New York was approved by the Director of the Federal Register on July 1, 1982.

Dated: June 19, 1987.

Lee M. Thomas,

Administrator, Environmental Protection Agency.

PART 52—APPROVAL AND PROMULGATION OF IMPLEMENTATION PLANS

Title 40, Chapter I, Subchapter C, Part 52, Code of Federal Regulations is amended as follows:

Subpart HH—New York

1. The authority citation for Part 52 continues to read as follows:

Authority: 42 U.S.C. 7401–7642.

2. A new § 52.1683 is added to read as follows:

§ 52.1683 Control strategy: Ozone.

The State of New York has certified to the satisfaction of the EPA that no sources are located in the nonattainment area of the State which are covered by the following Control Technique Guidelines:

(a) Natural Gas/Gasoline Processing Plants.

(b) Air Oxidation Processes at Synthetic Organic Chemical Manufacturing Industries.

[FR Doc. 87-14458 Filed 6-24-87; 8:45 am]

BILLING CODE 6560-50-M

GENERAL SERVICES ADMINISTRATION

41 CFR Part 101-45

[FPMR Amendment H-163]

Limited Sales by Holding Agencies

AGENCY: Federal Supply Service, GSA.

ACTION: Final rule.

SUMMARY: In an effort to simplify the sale of surplus personal property, especially at isolated and remote locations, the ceiling below which holding agencies may conduct sales of property is being raised and miscellaneous changes are being incorporated into the authority for limited sales by holding agencies. This regulation outlines the new dollar ceiling and the new requirements under the limited sales authority given to holding agencies.

EFFECTIVE DATE: June 25, 1987.

FOR FURTHER INFORMATION CONTACT: Mr. Stanley M. Duda, Director, Property Management Division (703-557-1240).

SUPPLEMENTARY INFORMATION: The General Services Administration has determined that this rule is not a major rule for the purpose of Executive Order 12291 of February 17, 1981, because it is not likely to result in an annual effect on the economy of $100 million or more; a major increase in costs to consumers or others; or significant adverse effects. The General Services Administration has based all administrative decisions underlying this rule on adequate information concerning the need for, and consequences of, this rule; has determined that the potential benefits to society from this rule outweigh the potential costs and has maximized the net benefits; and has chosen the alternative approach involving the least net cost to society.

List of Subjects in 41 CFR Part 101-45

Surplus government property.

PART 101-45—SALE, ABANDONMENT, OR DESTRUCTION OF PERSONAL PROPERTY

1. The authority citation for Part 101-45 continues to read in part as follows:

Authority: Sec. 205(c), 63 Stat. 390 (40 U.S.C. 486(c)) . . .

2. The table of contents for Part 101-45 is amended by revising the following entry:

101-45.304-3 Limited sales by holding agencies.

Subpart 101-45.1—General

3. Section 101-45.105-3 is amended by revising paragraphs (b) and (c) as follows:

§ 101-45.105-3 Exemptions.

* * * * *

(b) After required screening under Parts 101-43 and 101-44 is completed and, upon notification to the appropriate GSA regional office, a holding agency may elect to sell personal property where the estimated proceeds from a sale will not exceed $5,000 and perishable items regardless of the estimated proceeds from a sale. Holding agencies are responsible for making or obtaining reasonable estimates of the market value of personal property to ensure that the estimated proceeds of sale do not exceed $5,000. Optional Form (OF) 15, Poster, Sale of Government Property (see § 101-45.4903-15), and OF 16, Sales Slip, Sale of Government Personal Property (see § 101-45.4903-16), are prescribed for use by holding agencies for the sale of this property. These forms may be obtained as stated in § 101-45.4903. Procedures for conducting these sales are set forth in § 101-45.304-3. Further information

can be obtained from GSA regional offices.

(c) A holding agency may sell personal property, upon the approval of GSA, where the estimated proceeds from a sale exceed $5,000.

Subpart 101-45.3—Sale of Personal Property

3. Section 101-45.304-3 is revised to read as follows:

§ 101-45.304-3 Limited sales by holding agencies.

Holding agencies are responsible for ensuring that sales of personal property as authorized in § 101-45.105-3(b) are conducted in accordance with this Part. When conducting these sales, holding agencies must provide advance notice of the sales offering to the appropriate GSA regional sales office. Only the competitive bid sale methods prescribed in § 101-45.304-1 will be used by holding agencies to sell personal property.

(a) To advertise these limited sales by holding agencies, Optional Form (OF) 15, Poster, Sale of Government Property, may be mailed as a direct sales announcement or may be posted for display in prominent locations in public buildings. This mailing and/or posting should be completed at least 10 calendar days in advance of the sale. For sales by holding agencies estimated to exceed $500 fair market value, a classified advertisement must be placed in a minimum of one local newspaper distributed in the trading area where the property will be sold. This classified advertisement must appear at least 10 days prior to the sale to serve as a general notice to the public of the upcoming Government sale. When a classified advertisement is used, the mailing and/or posting of OF 15 in public buildings is optional. In order to ensure compliance with all sale terms and conditions, OF 15 must be posted at the sale site for review by prospective bidders. To obtain OF 15, a requisition in FEDSTRIP format should be submitted to the GSA regional office supporting the requesting activity. In addition to the required fill-in information, a statement should be entered on the bottom of OF 15 that the reverse side or attachment contains special provisions. These provisions or conditions of sale are listed below and must be entered on the reverse side or attachment of each OF 15 issued and/or posted.

(1) Only certified forms of payment (cash, cashier's checks, certified checks, money orders, etc.) will be accepted. Full payment is required before removal of the property.

(2) This offering is subject to the General Sale Terms and Conditions, SF 114C, and: ☐ Special Sealed Bid Conditions, SF 114C-1; ☐ Special Spot Bid Conditions, SF 114C-3; ☐ Special Auction Conditions, SF 114C-4; which are incorporated herein by reference. (Copies of this form are on file at the office which issued the sales offerings and will be made available upon request.) The selling agency shall designate the additional SF 114C form which is applicable for each type of sale.

(b) Inspection of property by potential bidders should be permitted for at least 2 calendar days. When property is sold by sealed bid sale the inspection should be held 7 calendar days before the sale to allow time for mailing bids. A complete listing of the property being offered should be posted at the sales site during inspection. Property should be described in commercial terminology, as fully and accurately as possible, using the best information available to the Government.

(c) Upset prices are those prices that are prudent estimates of the worth of the property and shall be established in advance of sales for use in evaluating bids received. Normally, bids under the upset prices will not result in awards. Upset prices are confidential and must not be made known to prospective bidders.

(d) When property is sold by sealed bid sale a complete abstract of bidders' names and bid prices must be maintained by item number to determine high bidders. The following statement, together with the signature and title of the employee conducting the sale, and the date of signature must appear on all abstracts of bids:

"I certify that I have personally opened and read all bids received, verified all entries on this abstract from those bids and find it correct."

(e) In the event of tie bids for:

(1) Sealed bid sales, a time and place shall be established for a drawing by lot and, if time permits, the bidders whose bids are tied shall be given an opportunity to be present at the drawing. Such drawing shall be witnessed by at least two persons, and the contract file shall contain the names and addresses of the witnesses.

(2) Spot bid sales, a coin toss shall be used to determine the successful bidder. The successful bidder on the tie bid item will be determined prior to requesting bids for the next item.

(3) Auction sales, a coin toss shall he used to determine the high bidder. After determining the high bidder, the auctioneer will request bids at the next increment to continue bidding on the item.

(f) OF 16, Sales Slip, Sale of Government Personal Property, is a four-part form provided for simple documentation of sales, which is similar to cash receipts used by private retail stores. The form should be used as an invoice, cash receipt, permanent account record, and/or property release document as required by individual agency procedures. To obtain OF 16, a requisition in FEDSTRIP format should be submitted to the GSA regional office supporting the requesting activity.

(g) Holding agencies may notify successful bidders on sealed bid sales of their award by telephone, but the award will be confirmed by a written notice of award. Spot bid and auction awards will be confirmed by a written notice of award if the contract is not completed the day of sale. Payment and removal of property should be completed as specified on OF 15.

(h) Proceeds from the sale of surplus personal property shall be deposited into the U.S. Treasury as miscellaneous receipts. Agencies are authorized to apply the proceeds from sale of exchange/sale property in whole or in part payment for similar items acquired for replacement purposes (see Part 101-46).

(i) The results of sales by holding agencies shall be forwarded for review to the appropriate GSA regional sales office within 10 workdays of sales conclusion. This report should include copies of OF's 15 and 16, the abstract for sealed bid sales, and the property listing.

(j) Every effort should be made to sell property as a separate item or when appropriate as scrap before it is classified as having no commercial value. Property having no commercial value may be abandoned or destroyed (see Subpart 101-45.5).

(k) If necessary, further guidance may be obtained from the appropriate GSA regional sales office.

4. Section 101-45.304-7 is amended by revising paragraphs (a)(4) and (c)(2) to read as follows:

§ 101-45.304-7 Advertising.

(a) * * *

(4) Limited sales by holding agencies. Advertising in the case of limited sales by holding agencies of property shall be accomplished by public posting and/or mailing of the OF 15 for property valued under $500 fair market value. When fair market values are estimated to exceed $500, a classified advertisement must be placed in a minimum of one local newspaper distributed widely in the trading area where the property will be sold. This classified advertisement must

appear at least 10 days prior to the sale to serve as a general notice to the public of the upcoming Government sale.

* * * * *

(c) * * *

(2) Personal property, perishables, etc., being sold pursuant to an authorization from a GSA regional office pursuant to § 101-45.105-3.

Dated: June 4, 1987.

T.C. Golden,

Administrator of General Services.

[FR Doc. 87-14318 Filed 6-24-87; 8:45 am]

BILLING CODE 6820-24-M

DEPARTMENT OF HEALTH AND HUMAN SERVICES

Health Care Financing Administration

42 CFR Part 412

[BERC-430-FC]

Medicare Program; Payments for Large Rural Hospitals That Serve a Disproportionate Share of Low-Income Patients; Comment Period

AGENCY: Health Care Financing Administration (HCFA), HHS.

ACTION: Final rule with comment period.

SUMMARY: This rule implements section 9306 of the Omnibus Budget Reconciliation Act of 1986 affecting fiscal year 1987 prospective payments for large rural hospitals that serve a disproportionate share of low-income patients.

DATES: *Effective Date:* This rule is effective on July 27, 1987.

Comment Date: Comments will be considered if we receive them at the appropriate address, as provided below, no later than 5:00 p.m. on August 24, 1987.

ADDRESS: Mail comments to the following address: Health Care Financing Administration, Department of Health and Human Services, Attention: BERC-430-FC, P.O. Box 26676, Baltimore, Maryland 21207.

If you prefer, you may deliver your comments to one of the following addresses:

Room 309-G, Hubert H. Humphery Building, 200 Independence Ave., SW. Washington, DC, or

Room 132, East High Rise Building, 6325 Security Boulevard Baltimore, Maryland.

In commenting, please refer to file code BERC-430-FC. Comments received timely will be available for public inspection as they are received, generally beginning approximately three weeks after publication of a document, in Room 309-G of the Department's offices at 200 Independence Avenue, SW., Washington, DC, on Monday through Friday of each week from 8:30 a.m. to 5:00 p.m. (phone: 202-245-7890).

FOR FURTHER INFORMATION CONTACT: Linda Magno, (301) 594-9343.

SUPPLEMENTARY INFORMATION:

I. Background

Section 1886(d)(5)(F) of the Social Security Act (the Act) requires that we make an additional payment to hospitals that serve a disproportionate share of low-income patients. As added to the Act by section 9105 of the Consolidated Omnbus Budget Reconciliation Act of 1985 (Pub. L. 99-272), section 1886(d)(5)(F)(i) provides that for discharges occurring on or after May 1, 1986 and before October 1, 1988, an additional payment must be made for each prospective payment hospital that meets one of the following criteria:

- During the hospital's cost reporting period, the hospital has a disproportionate low-income patient percentage that is at least equal to—
  - —15 percent if the hospital is located in an urban area and has 100 or more beds;
  - —40 percent if the hospital is located in an urban area and has fewer than 100 beds; or
  - —45 percent if the hospital is located in a rural area.
- The hospital is locaterd in an urban area, has 100 or more beds, and can demonstrated that, during its cost reporting period, more than 30 percent of its total inpatient care revenues are derived from State and local government payments for indigent care furnished to patients not covered by Medicare or Medicaid.

We implemented these provisions in 42 CFR 412.106 published in the May 6, 1986 interim final rule (51 FR 16788) and made further changes to those provisions in the September 3, 1986 final rule (51 FR 31497), which updated the prospective payment system for Federal fiscal year 1987.

II. New Legislation and Changes to the Regulations

On October 21, 1986, the Omnibus Budget Reconciliation Act of 1986 (Pub. L. 99-509) was enacted. Section 9306 of Pub. L. 99-509 makes several changes for prospective payment hospitals that serve a disproportionate share of low-income patients.

Section 9306(a) of Pub. L. 99-509 amended section 1886(d)(5)(F)(v) of the Act to provide that a hospital that is located in a rural area and has 500 or more beds also serves a significantly disproportionate number of low-income patients for a cost reporting period if the hospital has a disproportionate patient percentage that equals or exceeds a percentage specified by the Secretary.

Neither the statute nor legislative history indicates what the disproportionate patient percentage should be for a hospital of 500 or more beds that is located in a rural area. We considered setting the disproportionate patient percentage for those hospitals between 15 percent and 45 percent because those percentages represent the current range for hospitals under section 1886(d)(5)(F)(i) of the Act. Consistent with the threshold established under section 1886(d)(5)(F)(i) for large urban hospitals, we are setting the disproportionate patient percentage for large rural hospitals at 15 percent. We believe that this threshold is appropriate in light of the amendments in section 9306(b) of Pub. L. 99-509, which specify that the payment formula for large rural hospitals that serve a disproportionate share of low-income patients be the same formula currently applied to large urban hospitals. In addition, as indicated in the regulatory impact statement below, setting the disproportionate patient percentage at 15 percent allows the maximum number of hospitals to qualify under these provisions. We are revising § 412.106(b) to implement this provision, which is effective with discharges occurring on or after October 1, 1986.

Section 9306(b) of Pub. L. 99-509 amended section 1886(d)(5)(F)(iv) of the Act to provide that the payment adjustment factor for a hospital that meets the criteria as a rural disproportionate share hospital of 500 beds or more is calculated in the same way as the payment adjustment factor for a hospital, with 100 or more beds, that is located in an urban area. That is, the disproportionate share payment adjustment factor is the lesser of—

- 15 percent; or
- 2.5 percent plus one-half the difference between the hospital's disproportionate patient percentage and 15 percent.

We are revising § 412.106(c)(1) to implement this provision.

We note that section 1886(d)(2)(C)(iv) of the Act requires that the prospective payment amounts under section 1886(d), for all hospitals subject to the prospective payment system, be standardized for the estimated additional payments made to hospitals that serve a disproportionate share of low-income patients. Standardization removes from the base-year cost data

the effects of certain sources of variation in cost among hospitals. We standardized the prospective payments for fiscal year 1987 for the adjustment for disproportionate share hospitals in the September 3, 1986 final rule (51 FR 31501). However, because the provisions in section 9306 of Pub. L. 99-509 are retroactive to October 1, 1986, and the fiscal impact of these provisions is minimal, we are not restandardizing the prospective payment rates for the changes in section 9306 of Pub. L. 99-509 until October 1, 1987. That restandardization will be reflected in the annual notice of changes to the prospective payment system.

Section 9306(c) of Pub. L. 99-509 further amended sections 1886 (d)(2)(C)(iv), (d)(3)(C)(ii), (d)(5)(B)(ii), and (d)(5)(F)(i) of the Act to extend the disproportionate share provisions and other provisions relating to the indirect costs of medical education (see the May 6, 1986 interim final rule (51 FR 16788)) through discharges occurring before October 1, 1989 (rather than October 1, 1988 as was provided under sections 9104 and 9105 of Pub. L. 99-272). These amendments are being implemented by the conforming changes to §§ 412.63(c)(4), 412.106(b), and 412.118 (c) and (d).

III. Regulatory Impact Analysis

Executive Order (E.O.) 12291 requires us to prepare and publish a final regulatory impact analysis for any final regulation that meets one of the E.O. criteria for a "major rule"; that is, that would be likely to result in: an annual effect on the economy of $100 million or more; a major increase in costs or prices for consumers, individual industries, Federal, State, or local government agencies, or geographic regions; or significant adverse effects on competition, employment, investment, productivity, innovation, or on the ability of United States-based enterprises in domestic or export markets.

In addition, we generally prepare a final regulatory flexibility analysis that is consistent with the Regulatory Flexibility Act (RFA) (5 U.S.C. 601 through 612), unless the Secretary certifies that a final regulation will not have a significant economic impact on a substantial number of small entities. For purposes of the RFA, we treat all hospitals as small entities.

At present only three hospitals meet the definition of a large hospital located in a rural area specified in section 1886(d)(5)(F)(v) of the Act, as enacted by section 9306(a) of Pub. L. 99-509. Of these three hospitals, two qualify as disproportionate share hospitals under the more liberal threshold of 15 percent applied to large urban hospitals specified in seciton 1886(d)(5)(F)(v)(I) of the Act. Were we to apply the more restrictive threshold for rural hospitals specified in section 1886(d)(5)(F)(v)(III) of the Act, none of the hospitals would qualify for disproportionate share payments based on FY 1984 admission data.

Implementing the amendments enacted by section 9306 (a) and (b) is expected to have a negligible impact on total prospective payments for FY 1987 and FY 1988. It should be noted, however, that the individual hospitals may well view the gain in revenues resulting from qualifying as a disproportionate share hospital as a substantial benefit.

Implementation of the amendments enacted by section 9306(c) of Pub. L. 99-509, which extended disproportionate share provisions and other provisions relating to the indirect costs of medical education, is not expected to have any additional or other effects on prospective payment hospitals other than those effects recognized at the time section 9104(b) of Pub. L. 99-272 (which added section 1886(d)(3)(C)(ii) to the Act) took effect. This is because section 1886(d)(3)(C)(ii) of the Act provides that, effective for discharges from hospitals subject to the prospective payment system occurring on or after October 1, 1986, the average standardized amounts be further reduced, taking into account the effects of the standardization for indirect medical education costs as described in the addendum to the prospective payment system final rule published September 3, 1986 (51 FR 31498). Specifically, for hospitals in each of the twenty Federal payment areas (regional and national, urban and rural), the total payments (including indirect medical education and disproportionate share payment adjustments) that are based on payment rates standardized to the 8.1 percent curvilinear indirect medical education adjustment factor and paid out on the same basis, plus payments for disproportionate share, shall be neither more nor less than the total amounts that would have been paid based on rates standardized to 11.59 percent linear indirect teaching adjustment factor but paid on the basis of an 8.7 percent curvilinear factor. Congress directed the Secretary to compute this adjustment on a regional basis to ensure that the resulting redistribution of prospective payments will occur only within regions rather than among regions. Congress also provided that, once the provisions mandating disproportionate share payments and application of the 8.1 curvilinear indirect teaching adjustment factor ceases to be effective, the adjustment made to the prospective payments would preserve the system savings resulting from the changes in the indirect medical education adjustment factor. Thus, implementation of section 9306(c) of Pub. L. 99-509 merely extends the current payment methodology without adding or reducing payments to any hospitals under the prospective payment system.

The total annual impact of the amendments enacted by section 9306 of Pub. L. 99-509 and these implementing regulations is not expected to exceed $100 million, and we do not expect this rule to meet any of the other "major rule" criteria of E.O. 12291. For these reasons, we have determined that a regulatory impact analysis is not required.

In addition, execpt to implement specific provisions required under statute, section 9321(d) of Pub. L. 99-509 prohibits the Secretary from issuing any final rule or notice between October 21, 1986 and September 1, 1987 that would result in a $50 million or greater reduction in payments to hospitals or physicians for FY 1988. Should there be a reduction of $50 million or more as a result of implementing section 9306 of Pub. L. 99-509, we view such an impact as the result of the specific provisions required under statute rather than as an outcome of these regulations.

Also, we have determined, and the Secretary certifies, that this final rule will not have a significant economic impact on a substantial number of small entities, and we have therefore not prepared a regulatory flexibility analysis.

IV. Other Required Information

A. Waiver of Proposed Rulemaking

Section 9306(d) of Pub. L. 99-509 provides that the amendments made by subsections (a) (disproportionate patient percentage for large rural hospitals) and (b) (payment adjustment to large rural hospitals) of section 9306 are effective with discharges occurring on or after October 1, 1986. We ordinarily publish a notice of proposed rulemaking in the **Federal Register** to afford a period for public comment. However, for the reasons discussed below, we believe that notice of proposed rulemaking is unnecessary, and we find good cause to waive the procedure.

Essentially, the changes we are publishing in this final rule are mandated by section 9306 of Pub. L. 99-509. In accordance with section 9306(a), the discretion to set the disproportionate

patient percentage for large rural hospitals rests with the Secretary. We believe the decision to establish the threshold at 15 percent benefits certain hositals (that is, the two hospitals which will meet the criteria) while not disadvantaging other hospitals. That is, for FY 1987 we are not removing (through standardization) the additional costs of disproportionate share hospitals resulting from the changes in section 9306(a) of Pub. L. 99–509. When we do standardize for those provisions, beginning in FY 1988, the additional costs will be spread out amoung all the hospitals subject to the prospective payment system. We are providing a 60-day period for public comment, and we will take into consideration comments that we receive by the end of the comment period concerning our setting the percentage at 15 percent.

Because of the large number of items of correspondence we normally receive concerning regulations, we cannot acknowledge or respond to the comments individually. However, as indicated above, if we decide that changes concerning the disproportionate patient percentage for large rural hospitals are necessary as a result of our consideration of timely comments, we will issue a final rule and respond to the comments in the preamble of that rule.

B. Paperwork Reduction Act

The Paperwork Reduction Act of 1980 (44 U.S.C. 3501–3511) requires that any information collection requirements included in a regulatory document must be submitted to and approved by the Executive Office of Management and Budget (EOMB). However, section 9115(a) of Pub. L. 99–272 specifies that the Paperwork Reduction Act of 1980 does not apply to information required for purposes of carrying out Subpart A, Part 1, Subtitle A, Title IX of Pub. L. 99–272 (that is, sections 9101 through 9115 of Pub. L. 99–272). Section 9105 of Pub. L. 99–272, which implemented the provisions on payments for hospitals that serve a disproportionate share of low-income patients, is not subject to the information collection requirements of the Paperwork Reduction Act of 1980. Since section 9306 of Pub. L. 99–509, which further amends the disproportionate share hospital provisions established under section 9105 of Pub. L. 99–272, is also not subject to the information collection requirements, we believe the provisions in this final rule are not subject to EOMB approval.

List of Subjects in 42 CFR Part 412

Health facilities, Medicare.

42 CFR Part 412 is amended as set forth below:

CHAPTER IV—HEALTH CARE FINANCING ADMINISTRATION, DEPARTMENT OF HEALTH AND HUMAN SERVICES

PART 412—PROSPECTIVE PAYMENT SYSTEM FOR INPATIENT HOSPITAL SERVICES

A. The authority citation for Part 412 continues to read as follows:

Authority: Secs. 1102, 1122, 1871, and 1886 of the Social Security Act (42 U.S.C. 1302, 1320a-1, 1395hh, and 1395ww).

B. In Subpart D, § 412.63 is amended by revising paragraph (c)(4) to read as follows:

Subpart D—Basic Methodology for Determining Federal Prospective Payment Rates

§ 412.63 Federal rates for fiscal years after Federal fiscal year 1984.

* * * * *

(c) *Updating previous standardized amounts.* * * *

(4) For fiscal years 1987 through 1989, HCFA standardizes the average standardized amounts by excluding an estimate of the payments for hospitals that serve a disproportionate share of low-income patients.

* * * * *

C. In subpart G, in § 412.106, paragraph (b) is revised; the introductory text of paragraph (c) is republished; and paragraph (c)(1) is revised to read as follows:

Subpart G—Special Treatment of Certain Facilities

§ 412.106 Special treatment: Hospitals that serve a disproportionate share of low-income patients.

* * * * *

(b) *Criteria for classification.* (1) *General rule.* For discharges occurring on or after May 1, 1986 and before October 1, 1989, a payment adjustment (as described in paragraph (c) of this section) is made for each hospital that meets one of the following criteria:

(i) During the hospital's cost reporting period, the hospital has a disproportionate patient percentage that is at least equal to—

(A) 15 percent, if the hospital is located in an urban area and has 100 or more beds;

(B) 40 percent, if the hospital is located in an urban area and has fewer than 100 beds; or

(C) 45 percent, if the hospital is located in a rural area.

(ii) The hospital is located in an urban area, has 100 or more beds, and can demonstrate that, during its cost reporting period, more than 30 percent of its total inpatient care revenues are derived from State and local government payments for indigent care furnished to patients who are not covered by Medicare or Medicaid.

(2) *Special rule for certain rural hospitals.* For discharges occurring on or after October 1, 1986 and before October 1, 1989, a payment adjustment (as described in paragraph (c) of this section) is made for each hospital that, during its cost reporting period, has a disproportionate patient percentage that is at least equal to 15 percent, if the hospital is located in a rural area and has 500 or more beds.

(c) *Payment adjustment.* If a hospital meets one of the criteria in paragraph (b) of this section, the hospital's total DRG revenue based on DRG—adjusted prospective payment rates (for transition period payments, the Federal portion of the hospital's payment rates), including outlier payments determined under Subpart F of this part but excluding additional payments made under the provisions of this subpart or § 412.118, is increased by the disproportionate share payment adjustment factor, determined as follows:

(1) If the hospital meets the criteria of paragraph (b)(1)(i)(A) or (b)(2) of this section, the disproportionate share payment adjustment factor is the lesser of—

(i) 15 percent; or

(ii) 2.5 percent plus one-half the difference between the hospital's disproportionate patient percentage and 15 percent.

* * * * *

D. In Subpart H, in § 412.118, the introductory text to paragraph (c) is republished; paragraphs (c)(1) and (c)(2) are revised; and the introductory text to paragraph (d) is revised to read as follows:

Subpart H—Payments to Hospitals Under the Prospective Payment System

§ 412.118 Determination of indirect medical education costs.

* * * * *

(c) *Measurement for teaching activity.* The factor representing the effect of teaching activity on inpatient operating costs is equal to the following:

(1) For discharges occurring on or after May 1, 1986 and before October 1, 1989, the factor equals .405.

(2) For discharges occurring on or after October 1, 1989, the factor is equal to .5795.

(d) *Determination of education adjustment factor.* (1) For discharges

occurring on or after May 1, 1986 and before October 1, 1989, each hospital's education adjustment factor is calculated as follows:

* * * * *

(Catalog of Federal Domestic Assistance Program No. 13.773, Medicare—Hospital Insurance Program)

Dated: March 6, 1987.

William L. Roper,

Administrator, Health Care Financing Administration.

Approved: April 9, 1987.

Otis R. Bowen,

Secretary.

[FR Doc. 87-14468 Filed 6-24-87; 8:45 am]

BILLING CODE 4120-01-M

DEPARTMENT OF DEFENSE

48 CFR Part 217

Department of Defense Federal Acquisition Regulation Supplement; Undefinitized Contract Actions (UCAs)

AGENCY: Department of Defense (DoD).

ACTION: Interim rule; correction.

SUMMARY: This document corrects an interim rule on Undefinitized Contract Actions (UCAs) which was published in the **Federal Register** on Thursday, April 16, 1987 (52 FR 12387) and corrected on May 28, 1987 (52 FR 19872). The action is necessary to clarify the implementation of section 908 of the 1987 Department of Defense Authorization Act, Pub. L. 99-500. The public law limits Government expenditures or payments to the contractor under UCAs to certain amounts expressed in percentages of the maximum not-to-exceed price, until definitization. The interim rule published on April 16, 1987 also applied these limitations to Government obligations. This was not required by the public law. The purpose of this document is to remove that portion of the limitation.

FOR FURTHER INFORMATION CONTACT: Mr. Charles W. Lloyd, Executive Secretary, DAR Council, (202) 697-7266.

Charles W. Lloyd,

Executive Secretary, Defense Acquisition, Regulatory Council.

PART 217—SPECIAL CONTRACTING METHODS

Accordingly, the Department of Defense is correcting 48 CFR Part 217 as follows:

217.7503 [Corrected]

On page 12389, section 217.7503 is amended by removing in paragraph (b)(3)(ii) the words "obligated or"; by removing in both sentences of paragraph (b)(4) the words "obligated or"; and by inserting in both sentences of paragraph (b)(4) between the word "expended" and the word "until" the words "by the Government".

[FR Doc. 87-14478 Filed 6-24-87; 8:45 am]

BILLING CODE 3810-01-M

48 CFR Part 248

Department of Defense Federal Acquisition Regulation Supplement; Value Engineering Program Requirement

AGENCY: Department of Defense (DoD).

ACTION: Final rule.

SUMMARY: The Defense Acquisition Regulatory Council has approved changes to the coverage in the DoD FAR Supplement regarding the value engineering program requirement.

EFFECTIVE DATE: June 30, 1987. This coverage applies to solicitations issued and resulting contacts awarded on or after June 30, 1987.

FOR FURTHER INFORMATION CONTACT: Mr. Charles W. Lloyd, Executive Secretary, DAR Council, (202) 697-7266.

SUPPLEMENTARY INFORMATION:

A. Background

On March 26, 1986, the Deputy Secretary of Defense directed that:

(a) The value engineering program requirement clause be included in initial production contracts (first and second production buys) for major system acquisition programs (DoD Directive 5000.1), except in certain circumstances.

(b) A value engineering program requirement clause be considered for inclusion in the initial production contracts for less than major system acquisition programs.

DFARS Subpart 248.2 has been revised to place more emphasis on value engineering and its potential.

B. Regulatory Flexibility Act Information

The final rule does not constitute a significant revision within the meaning of FAR 1.501 and Pub. L. 98-577, and publication for public comment is not required. Therefore, the Regulatory Flexibility Act does not apply. However, comments from small entities concerning the affected Subpart will be considered in accordance with Section 610 of the Act. Such comments must be submitted separately and cite DAR Case 87-610D in correspondence.

C. Paperwork Reduction Act Information

The rule does not contain information collection requirements which require the approval of OMB under 44 U.S.C. 3501 et seq.

List of Subjects in 48 CFR Part 248

Government procurement.

Owen L. Green III,

Acting Executive Secretary, Defense Acquisition, Regulatory Council.

PART 248—VALUE ENGINEERING

Therefore, 48 CFR Part 248 is amended as follows:

1. The authority citation for 48 CFR Part 248 continues to read as follows:

Authority: 5 U.S.C. 301, 10 U.S.C. 2202, DoD Directive 5000.35, and DoD FAR Supplement 201.301.

2. Section 248.201 is revised to read as follows:

248.201 Clauses for supply or service contracts.

(a) *General.* (1) Supply or service contracts for spare parts and repair kits of $25,000 or more, for other than standard commercial parts, shall contain a VE incentive clause (see FAR 48.201(b)).

(2) A VE program requirement clause (FAR 52.248.1, Alternates I or II) shall be placed in initial production solicitations and contracts (first and second production buys) for major system acquisition programs as defined in DoD Directive 5000.1, except as specified in paragraphs (i) and (ii) below. A program requirement clause may be included in initial production contracts for less than major system acquisition programs if there is a potential for savings. The contracting officer is not required to include a program requirement clause in initial production contracts—

(i) Where, in the judgment of the contracting officer, the prime contractor has determined an effective VE program during either earlier program phases, or during other recent comparable production contracts.

(ii) Which are awarded on the basis of competition.

[FR Doc. 87-14480 Filed 6-24-87; 8:45 am]

BILLING CODE 3810-01-M

48 CFR Part 252

Department of Defense Federal Acquisition Regulation Supplement; Penalties for Unallowable Costs

AGENCY: Department of Defense (DoD).

ACTION: Interim rule; correction.

SUMMARY: This document corrects an interim rule issuing changes to the DoD Federal Acquisition Regulation Supplement with respect to Penalties for Unallowable Costs which was published in the Federal Register on Thursday, February 26, 1987 (52 FR 5770). The action is necessary to make an editorial correction to the rule.

FOR FURTHER INFORMATION CONTACT: Mr. Charles W. Lloyd, Executive Secretary, DAR Council, (202) 697-7266.

Charles W. Lloyd,

Executive Secretary, Defense Acquisition, Regulatory Council.

Accordingly, the Department of Defense is correcting 48 CFR Part 252 as follows:

PART 252—SOLICITATION PROVISIONS AND CONTRACT CLAUSES

252.231-7001 [Corrected]

Section 252.231-7001 is corrected by changing in paragraph (e) of the clause the referenced paragraphs (c) or (d) to read (b) or (c).

[FR Doc. 87-14481 Filed 6-24-87; 8:45 am]

BILLING CODE 3810-01-M

DEPARTMENT OF COMMERCE

National Oceanic and Atmospheric Administration

50 CFR Parts 604 and 642

[Docket No. 70481-7113]

Coastal Migratory Pelagic Resources of the Gulf of Mexico and the South Atlantic

AGENCY: National Marine Fisheries Service (NMFS), NOAA, Commerce.

ACTION: Final rule.

SUMMARY: NOAA issues this final rule to implement conservation and management measures prescribed in Amendment 2 to the Fishery Management Plan for Coastal Migratory Pelagic Resources of the Gulf of Mexico and the South Atlantic (FMP). This final rule provides for: (1) Revision of the framework measure for seasonal stock assessment, (2) changes in maximum sustainable yield (MSY) and total allowable catch (TAC), and establishment of geographical groups, allocations, and quotas for Spanish mackerel, (3) closure of the king or Spanish mackerel commercial fishery or reduction of the bag limit to zero when commercial or recreational allocations, respectively, are reached, (4) permits for charter vessels and for vessels fishing under a commercial allocation for Spanish mackerel, (5) bag limits for recreational fishermen fishing for Spanish mackerel, (6) restrictions for gill nets and prohibition of the use of purse seines, except for incidental catch, in the Spanish mackerel fishery and the fishery for the Gulf migratory group of king mackerel, and (7) prohibition of the transfer at sea of king or Spanish mackerel taken under a bag limit from the exclusive economic zone (EEZ). The intended effect of this rule is to arrest overfishing of the Spanish mackerel stock and to rebuild and maintain all stocks at a MSY level through flexible management procedures which allow annual adjustments to the management measures.

EFFECTIVE DATES: June 30, 1987, except § 642.7(a)(31) which is effective August 24, 1987.

ADDRESS: Copies of the Supplemental Regulatory Impact Review/Regulatory Flexibility Analysis are available from William N. Lindall, Southeast Region, National Marine Fisheries Service, 9450 Koger Boulevard, St. Petersburg, FL 33702.

FOR FURTHER INFORMATION CONTACT: William N. Lindall, 813-893-3721.

SUPPLEMENTARY INFORMATION: The mackerel fishery is managed under the FMP and its implementing regulations at 50 CFR Part 642. Amendment 1 to the FMP was prepared jointly by the Gulf of Mexico and South Atlantic Fishery Management Councils (Councils) and implemented September 22, 1985 (50 FR 34843, August 28, 1985). These regulations implement the approved measures of Amendment 2 to the FMP which also was prepared jointly by the Councils.

The FMP manages the coastal migratory pelagic fishery throughout the EEZ off the South Atlantic coastal States from the Virginia-North Carolina border south and through the Gulf of Mexico. The regulations, except for § 642.5, apply only to this area. The management unit for the FMP consists of Spanish mackerel, king mackerel, and cobia. Dolphin, bluefish, little tunny, and cero are minor species in the fishery, and only the data collection requirements of the FMP apply to these species.

The preamble to the proposed rule implementing Amendment 2 (52 FR 15519, April 29, 1987) contained a description of recent data and analysis which indicate there are two migratory groups of Spanish mackerel and that they should be treated as separate stocks for management purposes. In addition, allocations by user groups, quotas, bag limits, permits, and gear restrictions were discussed in detail. These discussions are not repeated here.

Comments and Responses

Six comments on the proposed rule were received from three sources.

The Coast Guard commented that the wording of the prohibition in § 642.7(a)(5) on possession of mackerel aboard a vessel with a gill net with mesh size less than that specified complicates enforcement because it is difficult to prove how the fish were taken. How (or where) the fish were taken is immaterial to the prohibition and need not be proven. Mere possession in the EEZ of mackerel on such a vessel is a violation, except as may be allowed under the incidental catch allowance specified in § 642.24(c). The Coast Guard's suggestion that smaller mesh nets be illegal aboard vessels permitted in the mackerel fishery is impractical as it would preclude permitted gill net vessels from participating in fisheries in which smaller mesh nets are used. NMFS recognizes that without compatible regulations in adjoining State waters this management measure is not readily amenable to dockside enforcement.

The Coast Guard commented that the retention and possession parts of the prohibition in § 642.7(a)(20) applicable to permitted vessels after a commercial closure will be difficult to enforce at sea because illegally caught fish cannot be distinguished from legally caught fish. NMFS does not agree. It is reasonable to believe that any recently caught mackerel possessed within the geographical limits of a particular migratory group were caught from that migratory group. Even if mackerel were taken in the waters of a State located within the geographical limits of a commercial closure after the closure, possession of such mackerel aboard a permitted vessel in the EEZ would be a violation, except as may be authorized for certain charter vessels.

The Coast Guard commented on the difficulty of enforcing at sea the purse seine catch allowance in § 642.24(d), i.e., determining the percentage of total catch made up of mackerel. The Coast Guard suggested making this provision a landing requirement. The present language of the purse seine catch allowance does not require that it be applied only at sea. Under suitable circumstances, weighing or counting of fish may be done upon landing.

A commercial fishing organization objected to the purse seine prohibition as inconsistent with the Magnuson Act

because it constitutes an allocation without conservation justification; it promotes inefficiency in the fishery and thus increases prices to the consumer. NOAA agrees in part and has disapproved the prohibition of purse seines in the fishery for the Atlantic migratory group of king mackerel. The Atlantic migratory group of king mackerel is not overfished and the traditional commercial fishermen have not taken their allocation. The other mackerel fisheries, however, are overfished. The traditional commercial fishermen in the Gulf have been severely restricted and the fisheries have been closed early in the season when allocations were filled. Allowing additional competition by purse seine vessels would be unfair to the traditional commercial fishermen. Any allowed purse seine quota on the overfished stocks would be very small and would have a minimal effect on cost to the consumer. The available supply of fish has already been so restricted that there are no implications for price changes based on demand considerations. As a further consequence of small purse seine quotas, such quotas could be exceeded easily by a single set of a purse seine; thus, conservation purposes would not be served.

A recreational fisherman commented that sale of mackerel caught under a bag limit should not be allowed. Specifically, he questioned whether charter boat patrons would release their catches when the captain could sell them. Implementation of such a measure without the opportunity to fully assess its impacts would be unwise. Such a ban was not included in the proposed rule and was not addressed in public hearings on Amendment 2.

A recreational fisherman suggested that in order to help with compliance with all Federal regulations, NMFS should require submission of the Coast Guard Captain's License with each application for a charter boat permit. NMFS does not agree that such submission would have the desired effect.

Approval/Disapproval of the Amendment

Except for the prohibition of purse seines in the fishery for the Atlantic migratory group of king mackerel, Amendment 2 is approved. The Councils did not provide adequate rationale for the disapproved prohibition. The strongest rationale presented was that traditional participants in the fishery are faced with such severe limitations in catch that it is unfair to allow purse seiners to compete for the limited resource. While true for the Spanish mackerel fishery and the fishery for the Gulf migratory group of king mackerel, it is not true for the Atlantic migratory group of king mackerel where the commercial allocation has never been reached. The disapproved measure is severable. Its omission does not alter the effectiveness of the amendment or impede the adoption and implementation of any other management measure.

Changes From the Proposed Rule

In § 642.4, paragraph (g) is redesignated as (f) and revised to make the provisions regarding transfer of a permit upon sale of a permitted vessel applicable to a charter vessel permit. Also in § 642.4, paragraph (k) is added so that the Regional Director will be kept informed of current information regarding permittees. Current information is necessary for statistical analyses and so that the Regional Director has up-to-date addresses to which to send notices of importance to commercial fishermen and charter boat owners or operators.

As discussed above, § 642.7(a)(6), § 642.21(a)(2), and § 642.24 (b) and (d) are revised to allow a purse seine fishery for king mackerel from the Atlantic migratory group.

In § 642.7, paragraph (a)(13) is revised to remove the prohibition on failure to transfer a permit. The regulations provide for transfer of a permit but do not require it. Paragraph (a)(18) is revised for clarity. Also in § 642.7, a new paragraph (a)(31) is added to provide a specific prohibition on owning or operating a charter vessel without the permit required by § 642.4(a)(3). The delayed effective date for § 642.7(a)(31) provides 60 days for charter vessel owners or operators to obtain the required permit.

Throughout this rule, reference to § 642.4 when discussing permitted vessels is changed to § 642.4(a)(1) or § 642.4(a)(3) to distinguish between a vessel permitted to fish under a commercial allocation and one with a charter boat permit.

In § 642.27, paragraph (f)(3) is revised for clarity.

In § 642.28, paragraph (c)(1) is revised for clarity.

In the proposed rule there was inconsistent use on the terms "allocation" and "quota". For consistency and clarity, the initial division of each migratory group of king mackerel or Spanish mackerel between commercial and recreational harvesters is referred to as an allocation. Any further subdivision, such as between geographical zones, is referred to as a quota. Thus, there are quotas for the eastern and western zones under the commercial allocation of Gulf migratory group king mackerel. This change is reflected in minor rewording throughout the final rule.

Classification

The Regional Director determined that Amendment 2 is necessary for the conservation and management of the coastal migratory pelagic resources of the Gulf of Mexico and the South Atlantic and that it is consistent with the Magnuson Act and other applicable law, except for that part of the amendment that would prohibit the use of purse seines in the fishery for the Atlantic migratory group of king mackerel.

The Councils prepared an environmental assessment (EA) for this amendment and concluded that there will be no significant impact on the environment as a result of this rule. You may obtain a copy of the EA from the address above.

The Administrator of NOAA determined that this rule is not a "major rule" requiring a regulatory impact analysis under Executive Order 12291. The Councils prepared a supplemental regulatory impact review (SRIR) which concluded that greater benefits will result from this rule in terms of overall poundage produced than from the other alternatives. You may obtain a copy of the SRIR from the address above.

The Councils prepared a final regulatory flexibility analysis which describes the effects this rule will have on small entities. You may obtain a copy of this analysis from the address above.

This rule contains a collection of information requirement subject to the Paperwork Reduction Act. The collection of this information has been approved by the Office of Management and Budget, OMB Control Number 0648-0183. When mandatory reporting by selected recreational fishermen is required, an additional request will be submitted to OMB.

The Councils have determined that this proposed rule will be implemented in a manner that is consistent to the maximum extent practicable with the approved coastal zone management programs of North Carolina, South Carolina, Florida, Alabama, Mississippi, and Louisiana. Georgia and Texas do not have approved coastal zone management programs. This determination was submitted for review by the responsible State agencies under

section 307 of the Coastal Zone Management Act. The State agencies of Mississippi and Louisiana agreed with this determination. Other State agencies failed to comment within the statutory time period.

The Assistant Administrator for Fisheries, NOAA, found that it would be contrary to the public interest in effective management of the coastal migratory pelagic resources to delay for 30 days the effective date of this rule. An emergency interim rule which is in effect through June 29, 1987 (52 FR 10762, April 3, 1987) currently provides necessary conservation measures for Spanish mackerel. To continue those conservation measures without interruption, it is necessary that this rule, with the exception of § 642.7(a)(31), become effective on June 30, 1987.

NOAA has issued a notice of preliminary change in the TAC for the Gulf migratory group of king mackerel and the Atlantic and Gulf migratory groups of Spanish mackerel and bag limits for Spanish mackerel (52 FR 21977, June 10, 1987). Final action on the proposed changes will further amend 50 CFR Part 642 and is expected to be effective on or about July 1, 1987.

List of Subjects

50 CFR Part 604

Reporting and recordkeeping requirements.

50 CFR Part 642

Fisheries, Fishing, Reporting and recordkeeping requirements.

Dated: June 19, 1987.

James E. Douglas, Jr.,

Deputy Assistant Administrator for Fisheries, National Marine Fisheries Service.

For reasons set forth in the preamble, 50 CFR Parts 604 and 642 are amended as follows:

PART 604—OMB CONTROL NUMBERS FOR NOAA INFORMATION COLLECTION

Requirements

1. The authority citation for Part 604 continues to read as follows:

Authority: Paperwork Reduction Act of 1980, 44 U.S.C. 3501–3520 (1982).

2. The table of § 604.1 is amended by adding the following entry in numerical order by section number:

§ 604.1 OMB control numbers assigned under the Paperwork Reduction Act.

* * * * *

50 CFR Part or section where the information collection requirement is located	Current OMB control No. (all numbers begin 0648-)
* * * * * * *	
§ 642.4(a)(3), (b)(4), and (k)	0183
* * * * * * *	

PART 642—COASTAL MIGRATORY PELAGIC RESOURCES OF THE GULF OF MEXICO AND SOUTH ATLANTIC

3. The authority citation for Part 642 continues to read as follows:

Authority: 16 U.S.C. 1801 *et seq.*

4. In § 642.2, under the definition for *Coastal migratory pelagic fish*, the word "mackerel" is removed from the phrase "Cero mackerel", the definition for *Fishery conservation zone (FCZ)* is removed, the definitions for *Migratory group* and *Total allowable catch (TAC)* are revised, and new definitions for *Exclusive Economic Zone (EEZ)*, and *Overfishing* are added in alphabetical order to read as follows:

§ 642.2 Definitions.

* * * * *

Exclusive economic zone (EEZ) means the zone established by Presidential Proclamation 5030, dated March 10, 1983, and is that area adjacent to the United States which, except where modified to accommodate international boundaries, encompasses all waters from the seaward boundary of each of the coastal States to a line on which each point is 200 nautical miles from the baseline from which the territorial sea of the United States is measured.

* * * * *

Migratory group means a group of fish that may or may not be a separate genetic stock but which for management purposes may be treated as a separate stock (See Figure 2 and § 642.29(a) for the geographical and seasonal boundaries between migratory groups of king mackerel and § 642.29(b) for the geographical boundary between migratory groups of Spanish mackerel.)

* * * * *

Overfishing or *overfished* means an excessive mortality rate on a stock of fish (mortality rate exceeds F_{MSY} or $F_{0.1}$) or spawning biomass low enough to affect recruitment.

* * * * *

Total allowable catch (TAC) means the maximum permissible level of annual harvest specified for a stock or migratory group after consideration of the biological, economic, and social factors with such level usually being specified from below the upper range of ABC. TAC may be set above the ABC range when it will not result in overfishing.

* * * * *

5. In § 642.4, paragraph (c) is removed, paragraphs (a) and (b) are revised, paragraphs (d) through (k) are redesignated as (c) through (j), newly redesignated paragraphs (c), (e), (f), and (g) are revised, and paragraph (k) is added, to read as follows:

§ 642.4 Permits and fees.

(a) *Applicability.* (1) An owner or operator of a fishing vessel which fishes for king or Spanish mackerel under a commercial allocation in § 642.21 (a) or (c) is required to obtain an annual vessel permit.

(2) A qualifying owner or operator of a charter vessel may obtain a permit to fish under a commercial allocation for king or Spanish mackerel. Charter vessels must adhere to bag limits while under charter.

(3) An owner or operator of a charter vessel which fishes for coastal migratory pelagic fish is required to obtain an annual charter vessel permit.

(b) *Application for permit.* (1) An application for a permit may be submitted to the Regional Director at any time. An application must be signed by the owner or operator.

(2) An applicant for a permit to fish under a commercial allocation for king and/or Spanish mackerel must provide the following information:

(i) Name, mailing address including zip code, and telephone number of the owner and the operator of the vessel;

(ii) Name of vessel;

(iii) The vessel's official number;

(iv) Home port or principal port of landing, gross tonnage, radio call sign, and length of vessel;

(v) Approximate fish hold capacity of the vessel;

(vi) A sworn statement by the owner or operator certifying that at least 10 percent of his or her earned income was derived from commercial fishing, i.e., sale of the catch, during the preceding calendar year (January 1 through December 31);

(vii) Any other information concerning vessel, gear characteristics, or fishing area requested by the Regional Director;

(viii) The migratory group(s) of king and/or Spanish mackerel that will be fished; and

(ix) Proof of certification as required by paragraph (b)(3) of this section.

(3) The Regional Director or his designee may require the applicant to provide documentation supporting the sworn statement submitted under paragraph (b)(2)(vi) of this section before a permit is issued or to

substantiate why such a permit should not be revoked under paragraph (h) of this section.

(4) An applicant for a charter vessel permit must provide the following information:

(i) Name, mailing address including zip code, and telephone number of the owner and the operator of the vessel;

(ii) Name of vessel;

(iii) The vessel's official number;

(iv) Homeport or principal port of landing, and length of vessel; and

(v) Passenger capacity.

(c) *Issuance.* The Regional Director or his designee will issue permits at any time for an April through March permit year. Permits for the following permit year become available in February. Until a permit to fish under a commercial quota is received, bag limits apply.

* * * * *

(e) *Duration.* A permit is valid only for that portion of the permit year remaining after it is issued (April 1 through March 31 is the full permit year), unless revoked, suspended, or modified under Subpart D of 15 CFR Part 904.

(f) *Transfer.* A permit issued under this section is not transferable or assignable except on sale of the vessel to a new owner. A permit is valid only for the fishing vessel for which it is issued. A person purchasing a vessel with a permit to fish under a commercial allocation for king or Spanish mackerel or a charter vessel with a permit to fish for coastal migratory pelagic fish must apply for a permit in accordance with the provisions of paragraph (b) of this section. The application must be accompanied by a copy of an executed (signed) bill of sale. The new owner of a permitted vessel may fish with the preceding owner's permit until a new permit is issued or his application is disapproved, but for a period not to exceed 60 days from the date of purchase. Until a new permit is received, a copy of the executed (signed) bill of sale must be aboard the vessel and available for inspection by an authorized officer.

(g) *Display.* A permit issued under this section must be carried aboard the fishing vessel, and a vessel permitted to fish under a commercial allocation must be identified as provided for in § 642.6. The operator of a fishing vessel must present the permit for inspection upon request of an authorized officer.

* * * * *

(k) *Change in permit application information.* A permittee must notify the Regional Director within 30 days after any change in the permit application information required by paragraph (b)(2) or (b)(4) of this section.

6. In § 642.5, paragraphs (a) introductory text, and (a)(1) are revised to read as follows:

§ 642.5 Reporting requirements.

(a) *Commercial vessel owners and operators.* Any person who owns or operates a fishing vessel that fishes for or lands coastal migratory pelagic fish for sale, trade, or barter, or that fishes under a permit required in § 642.4(a)(1) in the Gulf of Mexico EEZ or South Atlantic EEZ or in adjoining State waters, and who is selected to report must provide the following information regarding any fishing trip to the Center Director:

(1) Name and official number of vessel;

* * * * *

7. In § 642.6, paragraph (a) introductory text is revised, to read as follows:

§ 642.6 Vessel identification.

(a) *Official number.* Each vessel of the United States engaged in fishing for king or Spanish mackerel under a commercial allocation and the permit specified in § 642.4(a)(1) must—

* * * * *

8. In § 642.7, paragraphs (a) (5), (6), (13), (17) through (22), and (27) through (30) are revised and paragraph (a)(31) is added, to read as follows:

§ 642.7 Prohibitions.

(a) * * *

* * * * *

(5) Possess in the EEZ king or Spanish mackerel on board a vessel with gill nets with a minimum mesh size less than that specified in § 642.24(a), except for an incidental catch allowance as specified in § 642.24(c);

(6) Fish in the EEZ for king mackerel from the Gulf migratory group or for Spanish mackerel from either the Gulf or Atlantic migratory group using a purse seine, as specified in § 642.24(b);

* * * * *

(13) Fail to display a permit as provided for in § 642.4(g);

* * * * *

(17) Purchase, sell, barter, trade, or accept in trade, king or Spanish mackerel, harvested in the EEZ from a specific migratory group or zone, for the remainder of the appropriate fishing year specified in § 642.20, after the allocation or quota for that migratory group or zone as specified in § 642.21 (a), (b), (c), or (d) has been reached and closure as specified in § 642.22 has been invoked. (This prohibition does not apply to trade in king or Spanish mackerel harvested, landed, and bartered, traded, or sold prior to the closure and held in cold storage by dealers and processors);

(18) Fish for, retain, or have in possession in the EEZ aboard a vessel permitted under § 642.4(a)(1) to fish under a commercial allocation king mackerel from a migratory group or zone after the commercial allocation or quota for that migratory group or zone specified in § 642.21(a) has been reached and closure has been invoked as specified in § 642.22(a), except as provided in § 642.28(c)(2);

(19) Sell the incidental catch allowance of king or Spanish mackerel taken in the EEZ under § 642.24 (c) or (d) after the allocations or quotas specified in § 642.21 (a) or (c) have been reached and closure has been invoked as specified in § 642.22(a);

(20) Fish for, retain, or have in possession in the EEZ aboard a vessel permitted under § 642.4(a)(1) to fish under a commercial allocation Spanish mackerel from a migratory group after the commercial allocation for that migratory group specified in § 642.21(c) has been reached and closure has been invoked under § 642.22(a), except as provided for in § 642.28(c)(2);

(21) Land, consume at sea, sell, or have in possession at sea or at time of landing king or Spanish mackerel in excess of the bag limits specified in § 642.28, except as provided for under § 642.21 (a) and (c);

(22) Fish for king or Spanish mackerel in the EEZ under an allocation specified in § 642.21 (a) or (c) without a permit as specified in § 642.4(a)(1);

* * * * *

(27) Possess king or Spanish mackerel harvested in the EEZ under a recreational allocation set forth in § 642.21 (b) or (d) after the bag limit for that recreational allocation has been reduced to zero under § 642.22(b);

(28) Sell king or Spanish mackerel harvested under the recreational bag limits in § 642.28(a) except as specified in § 642.28(d);

(29) Operate a vessel that fishes for king or Spanish mackerel in the EEZ with king or Spanish mackerel aboard in excess of the cumulative bag limit, based on the number of persons aboard, applicable to the vessel, as specified in § 642.28(f);

(30) Transfer at sea in the EEZ from a fishing vessel to any other vessel king or Spanish mackerel caught under the bag and possession limits specified in § 642.28(a) or transfer at sea any such king or Spanish mackerel taken from the EEZ; or

(31) Own or operate a charter vessel which fishes for coastal migratory pelagic fish in the EEZ without a permit as specified in § 642.4(a)(3).

* * * * *

9. Section 642.20 is revised to read as follows:

§ 642.20 Seasons.

The fishing year for the Gulf migratory groups of king and Spanish mackerel for allocations and quotas begins at 0001 hours, July 1, and ends at 2400 hours, June 30, local time (see Figure 2). The fishing year for the Atlantic migratory groups of king and Spanish mackerel begins at 0001 hours, April 1, and ends at 2400 hours, March 31, local time. The fishing year for all other coastal migratory pelagic fish begins at 0001 hours, January 1, and ends at 2400 hours, December 31, local time.

10. In § 642.21, paragraph (a)(3) is amended by removing the reference to Table 2 of Appendix A; paragraphs (a)(1)(iii) and (e) are removed; paragraphs (a)(1) introductory text, (a)(1) (i) and (ii), (a)(2), (c) and (d) are revised; and paragraph (f) is redesignated as (e) and revised, to read as follows:

§ 642.21 Quotas and allocations.

(a) *Commercial allocations and quotas for king mackerel.* (1) The commercial allocation for the Gulf migratory group of king mackerel is 0.93 million pounds per fishing year. This allocation is divided into quotas as follows:

(i) 0.64 million pounds for the eastern zone; and

(ii) 0.29 million pounds for the western zone.

(2) The commercial allocation for the Atlantic migratory group of king mackerel is 3.59 million pounds per fishing year. No more than 0.4 million pounds may be harvested by purse seines.

* * * * *

(c) *Commercial allocations for Spanish mackerel.* (1) The commercial allocation for the Gulf migratory group of Spanish mackerel is 1.03 million pounds per fishing year.

(2) The commercial allocation for the Atlantic migratory group of Spanish mackerel is 2.2 million pounds per fishing year.

(d) *Recreational allocations for Spanish mackerel.* (1) The recreational allocation for the Gulf migratory group of Spanish mackerel is 0.77 million pounds per fishing year.

(2) The recreational allocation for the Atlantic migratory group of Spanish mackerel is 0.7 million pounds per fishing year.

(e) *Zones.* The boundary between the eastern and western zones established for the quotas under the commercial allocation of the Gulf migratory group of king mackerel in paragraph (a)(1) of this section is a line extending directly south from the Alabama/Florida boundary (87°31'06" W. longitude) to the outer limit of the EEZ (Figure 2).

11. Section 642.22 is revised to read as follows:

§ 642.22 Closures.

(a) The Secretary, by publication of a notice in the **Federal Register**, will close the king or Spanish mackerel commercial fishery in the EEZ for a particular migratory group or zone when the allocation or quota under § 642.21 (a) or (c) for that migratory group or zone has been reached or is projected to be reached. The notice of closure for an allocation or quota specified under § 642.21 (a) or (c) will also provide that the purchase, barter, trade, and sale within the boundaries of the closed area of king or Spanish mackerel taken from the EEZ after the closure is prohibited for the remainder of that fishing year. This prohibition does not apply to trade in Spanish or king mackerel harvested, landed, and bartered, traded, or sold prior to the closure and held in cold storage by dealers or processors.

(b) The Secretary, after consulting with the Councils and by publication of a notice in the **Federal Register**, will reduce the bag limit for the recreational fishery for king or Spanish mackerel in the Atlantic or Gulf migratory group to zero when the allocation for that group under § 642.21 (b) or (d) is reached or is projected to be reached and when that group is overfished. After such reduction, all king or Spanish mackerel caught from that group must be returned to the sea immediately and possession of king or Spanish mackerel of that group on board recreational vessels is prohibited.

12. Section 642.24 is revised to read as follows:

§ 642.24 Vessel, gear, equipment limitations.

(a) *Gill nets*—(1) *King mackerel.* The minimum mesh size for gill nets used to fish for king mackerel is 4¾ inches (stretched mesh).

(2) *Spanish mackerel.* The minimum mesh size for gill nets used to fish for Spanish mackerel is 3½ inches (stretched mesh).

(b) *Purse seines.* Except as provided in paragraph (d) of this section, the use of purse seines to fish for king mackerel from the Gulf migratory group or for Spanish mackerel from the Gulf or Atlantic migratory group is prohibited.

(c) *Incidental catch allowance.* An incidental catch of king mackerel is allowed equal to ten percent of the total catch by number of Spanish mackerel on board a vessel with gill nets with a minimum mesh size smaller than that specified in paragraph (a)(1) of this section.

(d) *Purse seine catch allowance.* A vessel with a purse seine aboard will not be considered as fishing for king mackerel or Spanish mackerel in violation of the prohibition of purse seines under paragraph (b) of this section, or, in the case of king mackerel from the Atlantic migratory group, in violation of a closure effected in accordance with § 642.22(a), provided the catch of king mackerel or Spanish mackerel does not exceed one percent or ten percent, respectively, by weight or number (whichever is less) of the catch of all fish aboard the vessel. Such king or Spanish mackerel will be counted toward the allocations and quotas provided for under § 642.21 (a) or (c) and are subject to the prohibition of sale under § 642.22(a).

13. In § 642.27, paragraphs (b), (c), (f)(1)(ii), (f)(2), and (f)(3) are revised, to read as follows:

§ 642.27 Stock assessment procedures.

* * * * *

(b) The Councils will consider the report and recommendations of the Group and hold public hearings at a time and place of the Councils' choosing to discuss the Group's report. The Councils may convene the Advisory Panel and the Scientific and Statistical Committee to provide advice prior to taking final action. After receiving public input, the Councils will make findings on the need for changes.

(c) If changes are needed in MSYs, TAC, allocations, quotas, bag limits, or permits, the Councils will advise the Regional Director in writing of their recommendations, accompanied by the Group's report, relevant background material, and public comment. This report will be submitted each year by such date as agreed upon by the Councils.

* * * * *

(f) * * *

(1) * * *

(ii) Spanish mackerel—15.7 million pounds to 19.7 million pounds.

(2) Setting TACs for each stock or group of fish which should be managed separately, as identified in the FMP. A TAC may not exceed the upper level of ABC if it results in overfishing. No TAC will exceed the best point estimate of MSY by more than ten percent. Reductions or increases in allocations as

a result of changes in TAC are to be as equitable as may be practicable, utilizing similar percentage changes to all participants in a fishery. (Changes in bag limits cannot always accommodate the exact desired level of change.)

(3) Implementing or modifying allocations, quotas, bag limits, or permits as necessary to limit the catch of each user group.

14. Section 642.28 is revised to read as follows:

§ 642.28 Bag and possession limits.

(a) *Bag limits.* A person who fishes for king or Spanish mackerel from the Gulf or Atlantic migratory group in the EEZ, except a person fishing under a permit specified in § 642.4(a)(1) and an allocation specified in § 642.21 (a) or (c), or possessing the purse seine catch allowance specified in § 642.24(d), is limited to the following:

(1) *King mackerel Gulf migratory group.*

(i) Possessing three king mackerel per person per trip, excluding the captain and crew, or possessing two king mackerel per person per trip, including the captain and crew, whichever is the greater, when fishing from a charter vessel.

(ii) Possessing two king mackerel per person per trip when fishing from other vessels.

(2) *King mackerel Atlantic migratory group.* Possessing three king mackerel per person per trip.

(3) *Spanish mackerel.* Bag limits set under § 642.27(c) will be announced in the **Federal Register.**

(b) All king mackerel must be landed in identifiable form as to number and species (with the understanding that head and tail can be removed). All Spanish mackerel nust be landed with head and fins intact.

(c) After a closure under § 642.22(a) is invoked for a commercial allocation or quota specified in § 642.21 (a) or (c):

(1) A vessel permitted under § 642.4(a)(1) to fish under a commercial allocation may not fish under the bag limit specified in paragraph (a) of this section for the closed species/migratory group/zone, except as provided for under paragraph (c)(2) of this section.

(2) A charter vessel permitted to fish under a commercial allocation for mackerel may continue to harvest fish under the bag limit specified in paragraph (a) of this section provided it is under charter and the recreational allocation for the respective migratory group of mackerel under § 642.21 (b) or (d) has not been reduced to zero under § 642.22(b).

(d) A fisherman may sell his catch of mackerel taken under the bag limits in paragraph (a) of this section unless the respective migratory group or zone commercial allocation or quota in § 642.21 (a) or (c) has been reached and closure under § 642.22(a) has been invoked. Mackerel sold by fishermen are counted against the appropriate commercial allocation or quota in § 642.21 (a) or (c) for the area where they are caught.

(e) A person who fishes for mackerel in the EEZ may not combine the bag and possession limits of this part with any bag or possession limits applicable to State waters.

(f) The operator of a vessel that fishes for mackerel in the EEZ is responsible for the cumulative bag limit, based on the number of persons aboard, applicable to that vessel.

(g) A person who fishes for king or Spanish mackerel from the EEZ under the bag limits specified in paragraph (a) of this section, or who possesses such king or Spanish mackerel in the EEZ, may not transfer at sea king or Spanish mackerel from a fishing vessel to any other vessel.

15. Section 642.29 is revised to read as follows:

§ 642.29 Area and time separation.

(a) *King mackerel*—(1) *Summer separation.* During the summer period (April 1 through October 31) the boundary separating the Gulf and Atlantic migratory groups of king mackerel is a line extending directly west from the Monroe/Collier County, Florida boundary (25°48′ N. latitude) to the outer limit of the EEZ (Figure 2).

(2) *Winter separation.* During the winter period (November 1 through March 31) the boundary separating the Gulf and Atlantic migratory groups of king mackerel is a line extending directly east from the Volusia/Flagler County, Florida boundary (29°25′ N. latitude) to the outer limit of the EEZ (Figure 2).

(b) *Spanish mackerel.* The boundary separating the Gulf and Atlantic migratory groups of Spanish mackerel is a line extending directly east from the Dade/Monroe County, Florida boundary (25°20.4′ N. latitude) to the outer limit of the EEZ.

Appendix A—[Amended]

16. In Appendix A, Tables 1 and 2 are removed.

§ 642.3, § 642.5, § 642.7, § 642.23, and § 642.26 [Amended]

17. In addition to the amendments set forth above, the initials "FCZ" are removed and the initials "EEZ" are added in their place in the following places: Section 642.3(c); Section 642.5(a) introductory text, (b) introductory text and (c) introductory text; Section 642.7(a) (3), (4), and (12); Section 642.23 (a) and (b); and Section 642.26(a)(1) introductory text, (a)(1)(iii) and (a)(2).

[FR Doc. 87-14357 Filed 6-24-87; 8:45 am]

BILLING CODE 3510-22-M

Proposed Rules

Federal Register
Vol. 52, No. 122
Thursday, June 25, 1987

This section of the FEDERAL REGISTER contains notices to the public of the proposed issuance of rules and regulations. The purpose of these notices is to give interested persons an opportunity to participate in the rule making prior to the adoption of the final rules.

DEPARTMENT OF AGRICULTURE

Agricultural Marketing Service

7 CFR Part 46

Increase in License Fees

AGENCY: Agricultural Marketing Service, USDA.

ACTION: Notice of proposed revision of regulations.

SUMMARY: The Department of Agriculture (USDA) proposes a revision of the Regulations (other than Rules of Practice) under the Perishable Agricultural commodities Act (PACA) which increases the license fee. The purpose of the revision is to cover increased operating costs associated with administration of the program.

DATE: Written comments on this proposal should be filed by July 27, 1987.

ADDRESS: Written comments on this proposal should be sent to Kathleen M. Finn, PACA Branch, Room 2095 S., Fruit and Vegetable Division, Agricultural Marketing Service, U.S. Department of Agriculture, Washington, DC 20250.

FOR FURTHER INFORMATION CONTACT: Kathleen M. Finn, Assistant to the Chief, PACA Branch, Room 2095 S., Fruit and Vegetable Division, AMS, USDA, Washington, DC 20250, Phone (202) 475-3244.

SUPPLEMENTARY INFORMATION: This proposed action has been reviewed under the USDA procedures established in the Secretary's Memorandum 1512-1 and supplemental memorandum dated March 5, 1980, to implement Executive Order 12291 and has been classified as "non-major" because it does not meet any of the criteria identified under the Executive Order.

Pursuant to requirements set forth in the Regulatory Flexibility Act (FRA), the Administrator of the Agricultural Marketing Service (AMS) has determined that this action will not have a significant economic impact on a substantial number of small entities.

The purpose of the RFA is to fit regulatory actions to the scale of business subject to such actions in order that small businesses will not be unduly or disproportionately burdened. Although there are numerous small entities doing business subject to the Perishable Agricultural Commodities Act, the regulation revision merely assures that the program, intended to prevent unfair trade practices in the industry, is sufficiently funded to perform its responsibilities.

The proposed action will not have an annual effect on the economy of $100 million or more, nor will it result in a major increase in costs or prices. The Administrator of the Agricultural Marketing Service has determined that the proposal is in response to an emergency funding situation and as such is considered to be an agency management decision.

Background

The PACA was enacted by Congress in 1930 so as to establish a code of fair trading practices covering the marketing of fresh and frozen fruits and vegetables in interstate or foreign commerce. It protects growers, shippers, and distributors dealing in those commodities by prohibiting unfair and fraudulent practices.

The law provides for the enforcement of contracts by providing for the collection of damages from any one who fails to meet contractual obligations. On May 7, 1984, an amendment to the PACA, Pub. L. 98-273, impressed a statutory trust on licensees for perishable agricultural commodities received, products derived from, and any receivables or proceeds due from the sale of the commodities for the benefit of suppliers, sellers, or agents who have not been paid.

The PACA is enforced through a licensing system. All commission merchants, dealers, and brokers engaged in business subject to the Act must be licensed. The cost of administering the Act is financed entirely through the license fees paid by those engaging in business subject to the law. The Secretary is charged with setting the license fee at a level necessary to meet the expenses of administration within the maximum provided in the law by Congress. Amendments to the Act in 1981 permitted the Secretary to assess a base annual fee of up to $300, plus an assessment of up to $150 for each branch operation exceeding nine. The maximum aggregate annual license fee for any firm cannot exceed $3,000.

The administration of the trust statute has increased the workload under the program along with related travel expenses far above original expectations. As a by-product of the trust amendment, there has also been a dramatic increase in the filings of reparation actions by injured parties to recover damages under their contract, as well as increases in trade inquiries, disciplinary complaint filings, and investigations that require personal audits. It is anticipated that the workload and travel requirements will continue to increase as more growers, shippers, and distributors seek to utilize the benefits and protection of the new statute. Under the current fee assessment, the program has been operating with a deficit and drawing down its trust fund reserve. Unless fees are increased, the program will deplete its trust fund reserve during Fiscal Year 1988, at which time enforcement activities will have to be curtailed.

In order to ensure continued and effective administration of the program, the license fees for firms dealing in commodities subject to the PACA must be amended to reflect the increased costs associated with the program in the coming fiscal years. The current license fee is $216 plus $108 for each branch or additional business facility operated by the applicant exceeding nine. The Secretary has determined that an increase in such fees to $300 and $150, respectively, will cover the costs of the program through the beginning of Fiscal Year 1990.

List of Subjects in 7 CFR Part 46

Agricultural commodities.

PART 46—[AMENDED]

7 CFR Part 46 is amended as follows:

1. The authority citation for Part 46 continues to read as follows:

Authority: Section 15, 46 Stat. 537; 7 U.S.C. 499o.

2. Section 46.6 is revised to read as follows:

§ 46.6 License fee.

The annual license fee is three hundred (300) dollars plus one hundred

fifty (150) dollars for each branch or additional business facility operated by the applicant exceeding nine. In no case shall the aggregate annual fees paid by any applicant exceed three thousand (3,000) dollars. The Director may require that the fee be submitted in the form of a money order, bank draft, cashier's check or certified check made payable to Agricultural Marketing Service. Authorized representatives of the Department may accept fees and issue receipts therefore.

Done at Washington, DC, on June 22, 1987.

William T. Manley,

Deputy Administrator, Marketing Programs.

[FR Doc. 87-14477 Filed 6-24-87; 8:45 am]

BILLING CODE 3410-02-M

---

7 CFR Part 1068

[Docket No. AO-178-A41]

Milk in the Upper Midwest Marketing Area; Hearing on Proposed Amendments to Tentative Marketing Agreement and Order

AGENCY: Agricultural Marketing Service, USDA.

ACTION: Notice of public hearing on proposed rulemaking.

SUMMARY: The hearing is being held to consider changes in the Upper Midwest order in response to various industry proposals submitted by Land O'Lakes, Inc., and five other cooperative associations as well as a proposal by Marigold Foods.

The cooperatives' major proposal would provide a monthly minimum shipping requirement for reserve supply plants of 5 percent for August and December and 8 percent for September through November. The Director of the Dairy Division would have the authority to increase or decrease the monthly shipping percentages established for reserve supply plant qualification. A handler operating two or more reserve supply plants would have the election to pool this milk supply as a unit by meeting the same percentage requirements as a single plant. Other proposals by the cooperatives would also modify the pooling provisions of the order.

The proposal by Marigold Foods would permit the operator of one or more distributing plants and one or more soft-products (cream items, cottage cheese and yogurt but excluding ice cream) plants located within the marketing area to treat such plants as one plant, or unit, for pooling purposes.

DATE: The hearing will convene at 9:00 a.m. on July 7, 1987.

ADDRESS: The hearing will be held at The Thunderbird Motel, 2201 East 78th Street (Interstate Highway 494 and 24th Avenue South), Minneapolis (Bloomington), Minnesota 55420-1695, (612) 854-3411.

FOR FURTHER INFORMATION CONTACT: Richard A. Glandt, Marketing Specialist, Dairy Division, Agricultural Marketing Service, U. S. Department of Agriculture, Washington, DC 20250, (202) 447-4829.

SUPPLEMENTARY INFORMATION: This administrative action is governed by the provisions of sections 556 and 557 of Title 5 of the United States Code and, therefore, is excluded from the requirements of Executive Order 12291.

Notice is hereby given of a public hearing to be held at The Thunderbird Motel, 2201 East 78th Street (Interstate Highway 494 and 24th Avenue South), Minneapolis (Bloomington), Minnesota, beginning at 9:00 a.m., on July 7, 1987, with respect to proposed amendments to the tentative marketing agreement and to the order regulating the handling of milk in the Upper Midwest marketing area.

The hearing is called pursuant to the provisions of the Agricultural Marketing Agreement Act of 1937, as amended (7 U.S.C. 601-674), and the applicable rules of practice and procedure governing the formulation of marketing agreements and marketing orders (7 CFR Part 900).

The purpose of the hearing is to receive evidence with respect to the economic and marketing conditions which relate to the proposed amendments, hereinafter set forth, and any appropriate modifications thereof, to the tentative marketing agreement and to the order.

Evidence also will be taken to determine whether emergency marketing conditions exist that would warrant omission of a recommended decision under the rules of practice and procedure (7 CFR 900.12(d)) with respect to the proposed amendments.

Actions under the Federal milk order program are subject to the "Regulatory Flexibility Act" (Pub. L. 96-354). This Act seeks to ensure that, within the statutory authority of a program, the regulatory and information requirements are tailored to the size and nature of small businesses. For the purpose of the Federal order program, a small business will be considered as one which is independently owned and operated and which is not dominant in its field of operation. Most parties subject to a milk order are considered as a small business. Accordingly, interested parties are invited to present evidence on the probable regulatory and informational impact of the hearing proposals on small businesses. Also, parties may suggest modifications of these proposals for the purpose of tailoring their applicability to small businesses.

List of Subjects in 7 CFR Part 1068

Milk marketing orders, Milk, Dairy products.

PART 1068—[AMENDED]

1. The authority citation for Part 1068 continues to read as follows:

Authority: Secs. 1-19, 48 Stat. 31, as amended; 7 U.S.C. 601-674.

2. The proposed amendments, as set forth below, have not received the approval of the Secretary of Agriculture.

Proposed by Land O'Lakes, Inc., Associated Milk Producers, Inc., Mid-America Dairymen, Inc., Wisconsin Dairies, First District Association, and Cass-Clay Creamery:

Proposal No. 1:

In § 1068.7 Pool plant, revise paragraph (d) by revising (d)(1) and (d)(3), redesignate (d)(4) as (d)(5) and add a new (d)(4), delete (d)(6), and revise and redesignate (d)(5) as (d)(6) as follows:

§ 1068.7 Pool plant.

* * * * *

(d) * * *

(1) A daily average of 25,000 pounds or more of Grade A milk from dairy farmers is received at the plant on two consecutive days during the month:

(2) * * *

(3) The operator of the plant has filed a request with the market administrator for pool status prior to July 15. Once qualified as a pool plant pursuant to this paragraph, such status shall continue to be effective unless the operator requests nonpool status for the plant prior to the first day of the month for which nonpool status is requested, the plant subsequently fails to meet all of the conditions of this paragraph, or the plant qualifies as a pool plant under another order;

(4) The volume of bulk fluid milk products shipped from the plant to pool distributing plants during each of the months of August and December is 5 percent or more and during each of the months of September, October, and November is 8 percent or more of the total Grade A milk received at the plant from dairy farmers during the month (including milk delivered to the plant from dairy farms for the account of a cooperative association pursuant to § 1068.9(c) and milk diverted from the plant by the plant operator but excluding milk diverted to the plant

from another pool plant), subject to the following conditions:

(i) These shipping percentages may be increased or decreased by up to five percentage points during any month by the Director of the Dairy Division if he finds that such revision is necessary to prevent uneconomic shipments. Before making such a finding, the Director shall investigate the need for revision either on his own initiative or at the request of interested persons. If the investigation shows that a revision of the shipping percentage might be appropriate, he shall issue a notice stating that the revision is being considered and invite data, views, and arguments;

(ii) A cooperative association that operates a reserve supply plant may include as qualifying shipments its deliveries to pool distributing plants directly from farms of producers pursuant to § 1068.9(c);

(iii) A proprietary handler may include as qualifying shipments milk diverted pursuant to § 1068.13(d) to pool distributing plants; and

(iv) Two or more reserve supply plants operated by the same handler may qualify for pooling as a unit by meeting the applicable percentage requirements of this paragraph in the same manner as a single plant.

(5) The operator of the plant supplies fluid milk products to pool distributing plants located within an area designated by the market administrator as the "call area" in compliance with any announcement by the market administrator requesting a minimum level of shipments, as further provided below:

(i) The market administrator may require such supplies of fluid milk products from operators of any pool reserve supply plants within the call area whenever he finds that milk supplies for Class I use at pool distributing plants within the call area are needed from plants qualifying under this paragraph. Before making such a finding, the market administrator shall investigate the need for such shipments either on his own initiative or at the request of interested persons. If his investigation shows that such shipments might be appropriate, he shall issue a notice stating that a shipping announcement is being considered and inviting data, views, and arguments with respect to the proposed shipping announcement;

(ii) For the purpose of meeting any shipping requirement announced by the market administrator:

(A) Qualifying shipments to pool distributing plants within the call area may originate from any plant or producer milk supplies of the handler provided that shipments from sources other than the plant(s) subject to the call and milk supplies for which a cooperative association is the handler pursuant to § 1068.9(c) must be in addition to any shipments already being made by the handler and may not result from shifting milk supplies from a pool distributing plant outside the call area to one within the call area; and

(B) Shipments from a reserve supply plant within the call area to a pool distributing plant outside the call area or to a comparable plant regulated under another Federal order may count as if delivered to a pool distributing plant within the call area if the market administrator is notified of the amount of any such commitments to ship milk prior to announcement of a shipping requirement pursuant to this paragraph. Qualifying shipments to an other order plant may not be classified pursuant to § 1068.42(b)(3); and

(iii) Failure of a handler to comply with any announced shipping requirement, including making any significant change in his marketing operations that the market administrator determines has the impact of evading or forcing such an announcement, shall result in immediate loss of pool status for the plant pursuant to this paragraph. A plant losing pool status in this manner or a plant that requests nonpool status may not again qualify as a pool plant pursuant to this paragraph for a period of one year from the date on which pool status was last held; and

(6) A plant must have been a pool plant under this order during each of the preceding months of August through December to be a pool plant under this paragraph during the following months of January through July.

Proposed by Marigold Foods:

Proposal No. 2:

In § 1068.7 Pool plant, add a new paragraph (a)(3) as follows:

§ 1068.7 Pool plant.

* * * * *

(a) * * *

(3) A unit consisting of at least one pool distributing plant and one or more additional plants of a handler shall be considered as one plant for the purpose of meeting the requirements of this paragraph, subject to the following conditions:

(i) For each plant within the unit which is not a pool distributing plant, the combined disposition of skim milk and butterfat in products specified in section 40(a), section 40(b)(1) in packaged form, and section 40(b)(4)(i) is 50 percent or more of the total Grade A fluid milk products received in bulk form at such plant or diverted therefrom by the plant operator;

(ii) All plants within the unit are located within the marketing area; and

(iii) The operator of the unit has filed a written request with the market administrator prior to the first day of the month in which such status is desired effective.

Proposal No. 3:

In § 1068.7(a)(1), delete the following obsolete language:

"(Upon the effective date of this order, the market administrator shall compute and announce the weighted average Class I utilization percentage of the four markets combined herein for each of the preceding 12 months. Such computation shall be used in determining pooling standards pursuant to paragraphs (a) and (b) of this section during the first year this order is effective.)"

Proposed by the Dairy Division, Agricultural Marketing Service:

Proposal No. 4:

Make such changes as may be necessary to make the entire marketing agreement and the order conform with any amendments thereto that may result from this hearing.

Copies of this notice of hearing and the order may be procured from the Market Administrator, Aaron L. Reeves, 4570 W. 77th Street, Suite 210, Minneapolis, Minnesota 55435 or from the Hearing Clerk, Room 1079, South Building, United States Department of Agriculture, Washington, DC 20250, or may be inspected there.

Copies of the transcript of testimony taken at the hearing will not be available for distribution through the Hearing Clerk's Office. If you wish to purchase a copy, arrangements may be made with the reporter at the hearing.

From the time that a hearing notice is issued and until the issuance of a final decision in a proceeding, Department employees involved in the decisional process are prohibited from discussing the merits of the hearing issues on an ex parte basis with any person having an interest in the proceeding. For this particular proceeding, the prohibition applies to employees in the following organizational units:

Office of the Secretary of Agriculture
Office of the Administrator, Agricultural Marketing Service
Office of the General Counsel
Dairy Division, Agricultural Marketing Service (Washington office only)
Office of the Market Administrator, Upper Midwest Marketing Area

Procedural matters are not subject to the above prohibition and may be discussed at any time.

Signed at Washington, DC, on: June 19, 1987.

J. Patrick Boyle,

Administrator.

[FR Doc. 87-14430 Filed 6-24-87; 8:45 am]

BILLING CODE 3410-02-M

FEDERAL HOME LOAN BANK BOARD

12 CFR Part 563

[No. 87-661]

Regulatory Capital Requirements of Insured Institutions

Dated: June 10, 1987.

AGENCY: Federal Home Loan Bank Board.

ACTION: Proposed rule.

SUMMARY: The Federal Home Loan Bank Board ("Board") as operating head of the Federal Savings and Loan Insurance Corporation ("FSLIC") is proposing to amend its regulation setting the regulatory capital requirements for institutions insured by the FSLIC ("insured institutions") by changing the method of computing the annual calculation of industry profits; by deleting the provision concerning the effect upon base liabilities of acquisitions and sales of less than substantially all of the liabilities of an insured institution ("branch sales"); and by amending its earnings-based accounts regulation to conform that regulation's provisions establishing regulatory capital thresholds to the current regulatory capital requirements. The Board requests comment on all aspects of this proposal, including certain issues specifically mentioned below.

DATE: Comments must be received on or before August 24, 1987.

ADDRESS: Send comments to: Director, Information Services Section, Office of the Secretariat, Federal Home Loan Bank Board, 1700 G Street NW., Washington, DC 20552. Comments will be available for public inspection at this address.

FOR FURTHER INFORMATION CONTACT: Jerilyn Rogin, Staff Attorney, (202) 377-7018, Jerome L. Edelstein, Assistant Director, (202) 377-7057, John F. Connolly, Deputy Director for Capital and Finance, (202) 377-6465, Regulations and Legislation Division, Office of General Counsel; Richard C. Pickering, Deputy Director, (202) 377-6770, or Joseph A. McKenzie, Director, Policy Analysis Division, (202) 377-6763, Office of Policy and Economic Research, Federal Home Loan Bank Board, 1700 G Street NW., Washington, DC 20552.

SUPPLEMENTARY INFORMATION: These amendments are proposed pursuant to the Board's general authority under the National Housing Act and specifically under section 403(b), 12 U.S.C. 1726(b), as amended by the Garn-St Germain Depository Institutions Act of 1982, Pub. L. No. 97-320, section 202(d), 96 Stat. 1469, 1492.

A. Proposed Amendment to "Annual Calculation"

On August 15, 1986, the Board adopted its revised regulatory capital regulation establishing the levels of capital required for all insured institutions. *See* Board Res. No. 86-857, 51 FR 33565-88 (Sept. 22, 1986) ("capital regulation"). Among other things, the capital regulation requires that insured institutions maintain regulatory capital equal to at least six percent of net liability growth after December 31, 1986. The regulation also generally increases insured institutions' regulatory capital requirements on the level of liabilities each insured institution had on January 1, 1987. The capital on these existing liabilities must increase from the institution's capital requirement (before adjustment for contingency factor or qualifying balances) on January 1, 1987, to six percent over a transition period the length of which is determined by industry profitability.

Pursuant to § 563.13(b)(2)(iv), the capital regulation ties the increase in capital required on all insured institutions' base liabilities to the prior calendar year's aggregate average return on the assets of all insured institutions. 12 CFR 563.13(b)(2)(iv) (1987) ("April calculation") (hereinafter referred to as the "annual calculation"). Insured institutions are required to increase the capital required on their base liabilities by a percentage [1] of the annual calculation.

The capital regulation requires that insured institutions gradually increase their capital levels based, in part, on overall industry profitability. This gradual increase evidences the Board's recognition that internal generation of capital from retained earnings takes time and that in order to meet their capital requirements insured institutions should not be forced to convert to stock form or to issue securities without adequate regard for market conditions.

In adopting the capital regulation, however, the Board deemed it essential that insured institutions raise their capital levels as rapidly as possible. As stated in the preamble to the capital regulation, insured institutions have an immediate need for six percent capital on their total liabilities. 51 FR at 33571-73. The Board also set forth comprehensive policy reasons for requiring insured institutions to increase their capital requirements, incorporating policy discussion from the preamble to its proposed regulation. The former industry level of required capital did not provide adequate protection for insured institutions, their depositors, or the FSLIC fund. The Board believes that attainment of six percent capitalization by insured institutions is of continuing and ever increasing significance today. It hereby incorporates the discussion in the preambles to the proposed and final capital regulations concerning the reasons for attaining such levels. Board Res. No. 86-426, 51 FR 16550, 16552 (May 5, 1986); 51 FR at 33571-73.

Moreover, as is also explained in the preamble to the capital regulation, a six percent capital level for all insured institutions is not only necessary but feasible. *Id.* at 33569-70. As the Board then stated, an historical review of capital levels in the industry reveals that much higher levels have been sustained during certain periods in the past. *Id.* at 33569. Further, the feasibility of attaining the capital levels required by the capital regulation over the next six years was confirmed by a study conducted by the Board's Office of Policy and Economic Research. *See An Analysis of the Proposed Capital Requirements for Thrift Institutions: A Staff Economic Study* (Aug. 15, 1986). Based upon that study the Board concluded that the large majority of insured institutions will be able to meet the required six percent capital level. *Id.* The Board finds no reason to alter that conclusion and, accordingly, reaffirms that most institutions can realistically expect to achieve that goal.

The Board, however, believes that the changed financial picture of the industry since adoption of the capital regulation necessitates revision of the adjustment mechanism for increasing insured institutions' required capital on their base liabilities. The need for this change is reflected by the Board's computation of its first annual calculation. On April 30, 1987, the Board released its computation of the industry's 1986 annual calculation: the aggregate annual rate of return on the aggregate average level of assets of all insured institutions collectively was 0.09 percent. Board Res. No. 87-526, 52 FR 17470 (May 8, 1987). With an average return on assets of 0.09 percent, it would take approximately

[1] The appropriate percentage depends upon whether an insured institution falls within the standard group, with base ratios of three percent; or the lower group, with base ratios below three percent.

thirty-three years for the basic capital requirement to reach six percent of total liabilities.

The Board believes that this low annual calculation figure is a result of the increasing polarity between the profitable and unprofitable segments of the thrift industry. The industry is bifurcated with respect to profitability. The unprofitable segment of the industry, approximately 20 percent of insured institutions, incurred losses of $8.3 billion in 1986. At the same time, the overwhelming majority of insured institutions, that is, the remaining 80 percent of the industry, earned $9.2 billion in 1986.

Approximately eighty percent of the losses experienced by the unprofitable segment were incurred by institutions that are insolvent under generally accepted accounting principles ("GAAP"). Indeed, a large proportion of these GAAP-insolvent insured institutions would already have been closed by the FSLIC were it not for the serious undercapitalization of the FSLIC fund itself.

Today, in order to effect its original intention to raise the capital levels throughout the industry to at least six percent of total liabilities, the Board proposes to correct the deficiencies of the current measure of industry profitability by computing the annual calculation to exclude GAAP-insolvent insured institutions. Specifically, the Board proposes to amend § 563.13(b)(2)(iv) so that the annual calculation is based upon the median return on assets ("ROA") of all insured institutions whose assets exceed their liabilities under GAAP. Under this proposal, the annual calculation would be computed as a percentage of the sum of the median ROAs of all GAAP-solvent institutions in each of the four calendar quarters ending on the June 30th preceding computation of the annual calculation. The ROA for each institution would be calculated as follows: current GAAP net income for a quarter divided by an average of the institution's total assets at the end of that quarter and the end of the immediately preceding quarter.[2]

The Board believes that using GAAP-solvency as a basis for including institutions in the annual calculation is consistent with its current policy of requiring more standardized reporting. The Board is currently moving toward a GAAP reporting system for all insured institutions. Effective January 1, 1988, all insured institutions will be required to report to the Board on a GAAP basis. Board Res. No. 87-529, 52 FR 18340 (May 15, 1987). The first quarterly report under GAAP will be the report for the period ending March 31, 1988. Until the GAAP reporting system has been in effect for four quarters, the Board will approximate insured institutions' GAAP equity capital for purposes of the annual calculation by deducting those items included within regulatory capital that do not constitute GAAP equity capital. Such items include qualifying mutual capital certificates, qualifying subordinated debentures, appraised equity capital, net worth certificates, accrued net worth certificates, income capital certificates, and deferred net losses on loans and other assets sold. *See id.*

The Board has considered other methods of distinguishing between profitable and unprofitable institutions in order to correct the distortion revealed by the annual calculation it recently published. Based on a median figure, it determined the annual calculation excluding groups other than GAAP insolvent institutions. The figures were very comparable.[3] The Board chose, however, to distinguish based upon GAAP-solvency because the concept of solvency according to GAAP is readily understandable and consistent with the system of GAAP reporting that will be required of all insured institutions in the future.

The Board has also decided to amend the capital regulation by using a median rather than a mean (average) as the appropriate measure of central tendency. Whereas the mean is highly sensitive to extreme high or low ROAs and is affected by the size of the institutions considered, the median—by focusing on the ROA of the fiftieth percentile institution and on the ranking that generates that fiftieth percentile institution—thereby gives equal importance to each insured institution and more accurately reflects the ability of the large majority of insured institutions to advance toward six percent capitalization.[4]

In the Board's view, this proposed method of calculation is a more accurate reflection of overall industry profitability. Moreover, it eliminates the distorting effect of the inclusion of GAAP-insolvent institutions in the calculation, many of which are permitted to continue operating only as a result of the inadequacy of the FSLIC fund.

In addition, the Board is also proposing to change the timing for its calculation and publication of the aggregate return on assets of insured institutions for the prior year. The reason for this proposed change is that the Board is aware that approximately two-thirds of all insured institutions use the calendar year, from January 1 to December 31, both as their fiscal year and for purposes of their annual reports. Accordingly, the Board believes that it would facilitate planning by insured institutions if the capital required for their total liabilities existing on January 1 were the same for both halves of the calendar year.

This can be accomplished by computing the annual calculation in the fourth quarter of each year based on the four quarters ending on the June 30th preceding the computation and making the required increases in insured institutions' liability factors effective the following January 1 and July 1. Under this proposed change, the next annual calculation would be computed and released by the Board in the fourth quarter of this calendar year and would apply to the four quarters ending June 30, 1987. This computation would be used in computing institutions' required capital requirements on January 1, and July 1, 1988.

Comments are specifically requested on the Board's proposed method of computing the annual calculation to exclude all institutions that are insolvent under GAAP. Also requested are comments concerning the Board's proposed use of the median rather than the mean as the selected measure of central tendency for computation of the annual calculation.

B. Proposed Amendment to Branch Acquisitions and Sales Provision

The Board also is proposing to delete in full the portion of the capital regulation relating to the effect upon the calculation of required capital of an

[2] The Board notes that this figure is adjusted, where necessary, to reflect assets acquired by merger or bulk purchase.

[3] As of December 31, 1986, the annual calculation of ROA based upon the exclusion of GAAP insolvent institutions was 0.84. (Based on a mean figure, the ROA of only GAAP solvent institutions was 0.74). Based upon the exclusion of FSLIC cases—*i.e.* those insured institutions that have been transferred by the supervisory staff of one of the twelve Federal Home Loan Banks to the FSLIC for financial assistance and/or resolution—the figure was 0.80. Based upon the exclusion of insured institutions with regulatory capital less than zero, the figure was 0.81.

[4] The Board's Office of Policy and Economic Research ("OPER") has demonstrated that use of different measures of central tendency can have a significant effect on the calculation of the industry's ROA. The OPER has measured this return using different central tendencies. The recently published annual calculation, based on the average aggregate annual ROA for the entire industry, was 0.09 of the industry's average assets. The ROA for all insured institutions using a median figure rather than a mean was approximately 0.75 of industry's assets.

acquisition or sale of less than substantially all of the liabilities of an institution in which the selling institution continues in operation as a separate entity ("branch sale"). The current regulatory provision provides as follows:

> For any acquisition of less than substantially all of the liabilities of an institution in which the selling institution continues in operation as a separate entity (including, but not limited to, branch acquisitions), the base liabilities of the acquiring institution beginning in the quarter in which the transaction becomes effective shall be the base liabilities of the acquiring institution calculated to include an amount equal to the liabilities so acquired, the institution shall apply its liability factor for the quarter to its increased level of base liabilities acquired from the selling institution. The selling institution shall deduct the amount of liabilities sold from its base liabilities and shall apply its liability factor for the quarter to this reduced level of base liabilities.

12 CFR 563.13(b)(7)(ii) (1987). When the Board adopted this regulatory provision, its intention was to provide insured institutions with an incentive to achieve their planned growth by acquiring branches of existing institutions. This incentive is structured as follows: if an insured institution acquired a branch, the amount of that branch's liabilities would be added to its base liabilities rather than to its increased liabilities, resulting in a smaller increase in required capital. Correspondingly, the insured institution selling the branch would deduct that amount from its base liabilities.

The Board did not intend, however, that this provision of the capital regulation would have the effect of discouraging a program of shrinkage by branch sale as opposed to shrinkage through deposit runoff or other methods. The different effects of shrinkage through these means has become a major focus of various strategies to reduce institutions' capital requirements, with no identifiable public policy benefits. Accordingly, the Board now proposes to amend the capital regulation by deleting the provision prescribing different treatment of shrinkage or growth by branch sale or acquisition, respectively, from the treatment of shrinkage or growth by other means. Comments are specifically requested regarding the effects, both positive and negative, of the current rule on insured institutions' growth and shrinkage strategies and regarding the effects of deletion of the current provision on insured institutions.

Unlike the amendment revising the annual calculation described above that would become effective January 1, 1988, deletion of the specialized branch treatment may be adopted by the Board and made effective at an earlier date after the expiration of the comment period.

C. Proposed Amendment to Earnings-Based Accounts Regulation

The Board is also proposing to amend its earnings-based accounts ("EBA") regulation, § 563.3–10, to conform its provisions relating to regulatory capital with insured institutions' current capital requirements. This proposed revision to the capital threshold in the EBA regulation makes the net worth factor for supervisory approval for issuances of EBAs in excess of the standard threshold identical to a parallel provision in the brokered deposits regulation. 12 CFR 563.4 (1987).

Paragraph (c)(1) of the EBA regulation provides that Supervisory Agents may grant permission to insured institutions to issue earnings-based accounts above the otherwise permitted five percent of assets. A Supervisory Agent may increase an institution's maximum limit of earnings based accounts to twenty percent of the institution's assets after the Agent considers specific criteria listed in the regulation. Among the factors to be considered is whether the institution meets or exceeds its regulatory capital requirement as defined in the EBA regulation. 12 CFR 563.3–10(c)(1)(i). Regulatory capital is defined as:

> (1) An amount at least equal to three percent of all liabilities (*i.e.*, total assets, net of the following: loans in process, specific reserves, and deferred credits other than deferred taxes; minus regulatory capital as defined by § 561.13 of this subchapter). . . .

12 CFR 563.3–10(d)(1). The EBA regulation's criteria on institutions' capital also requires Supervisory Agents to consider whether de novo institutions meet their special regulatory capital requirements under § 563.13. 12 CFR 563.3–10(d)(2). The EBA regulation also directs Supervisory Agents to consider whether an insured institution's regulatory capital meets or exceeds the amount of regulatory capital required to be maintained in an applicable supervisory directive or operational agreement. *Id.* at § 563.3–10(c)(1).

The regulatory capital criteria in § 563.3–10(d) were taken verbatim from the net worth standard adopted by the Board in its brokered deposits regulation which was initially adopted on March 26, 1984. *See* 49 FR 13012 (April 2, 1984). That net worth standard, as explained in the preamble to the brokered deposits regulation, was intended to assure that insured institutions have net worth at least equal to three percent of total liabilities computed as required by § 563.13(b)(2), with two exceptions. First, insured institutions were allowed by § 563.13(b)(2) to use five year averaging in calculating their total liabilities. The Board decided to have Supervisory Agents ignore the effects of this technique in determining which institutions should be able to offer earnings based accounts over the standard five percent level. The Board believed that five year averaging permitted rapidly expanding institutions to understate their total liabilities. Second, the net worth criteria of the EBA regulation did not allow use of the twenty-year "phase-in" method in calculating an institution's total liabilities, because that method permitted institutions to reduce their total liabilities in computing their net worth requirements by as much as ninety-five percent depending on how long they had been FSLIC-insured. *De novo* institutions were required to meet their special net worth requirements set forth at 12 CFR 563.13(b)(2)(iii) (subsequently relocated to § 563.13(b)(2)).

At the time it adopted the EBA regulation, the Board was aware of the potential need for today's proposed amendment to the capital criteria of the EBA regulation because it was considering adopting a totally revised net worth regulation. The Board expressly recognized that if it made significant changes to the net worth regulation, the factors set forth in § 563.3–10(d) might no longer be appropriate. 49 FR 50019, 50022 (December 26, 1984). In fact, when it adopted revisions to its net worth requirements, it made conforming changes to the net worth criteria of the brokered deposits regulation, but failed to make similar changes to the EBA regulation. *See* 50 FR 5232, 5234 (Feb. 7, 1985). The new definition of net worth in the brokered deposits regulation was the greater of (1) the minimum net worth required by § 563.13, (2) three percent of liabilities, or (3) the net worth an institution is specifically required to have by a supervisory agreement or by any consent or approval granted by the Board or the Corporation. *Id.* The Board explained that the addition of the reference to § 563.13 and the requirement that the greater of the three alternatives had to be satisfied was "to conform the provisions of [the brokered deposit] rule to the final [net worth] rule . . . generally revising net worth requirements . . ." because "the amended net-worth requirements may result in a required amount of net-worth

exceeding 3 percent of total liabilities." *Id.* at 5233.

The net worth standard in the EBA regulation—namely, the net worth definition contained in that regulation—was never revised. Consequently, the Board is today proposing to revise the regulatory capital criteria in the EBA regulation. This proposed amendment, in effect, would mean that Supervisory Agents would consider the same standard set forth in the brokered deposits regulation in determining whether to permit a higher level of EBAs to be issued by insured institutions. The revision would provide that the appropriate regulatory capital factor is the greater of three percent of liabilities, the § 563.13(b) requirement, or a special requirement imposed upon an institution by a supervisory agreement or imposed as a condition to any consent or approval granted by the Board or the FSLIC with respect to the institution. Addition of the alternative tied to the § 563.13(b) requirements will assure that the regulatory capital level to be considered by Supervisory Agents is not less than the regulatory capital level that an institution must have to be eligible to issue EBAs up to five percent of its assets. Retention of the three percent floor, which will only affect those institutions that have regulatory capital requirements of less than three percent of total liabilities under § 563.13(b), simply will assure that the appropriate factor to be considered by Supervisory Agents is no less than that set forth by the current factor of the EBA regulation.

Comments are specifically requested concerning whether it is appropriate for Supervisory Agents to consider the three percent floor where an institution meets its regulatory capital requirement imposed by § 563.13(b) or otherwise imposed by the Board or the FSLIC.

Initial Regulatory Flexibility Analysis

Pursuant to section 3 of the Regulatory Flexibility Act, 5 U.S.C. 603, the Board is providing the following regulatory flexibility analysis:

1. *Reasons, objectives and legal basis underlying the proposed rule.* These elements are incorporated above in **SUPPLEMENTARY INFORMATION.**

2. *Small institutions to which the proposed rule would apply.* The Small Business Administration defines a small financial institution as "a commercial bank or savings and loan association, the assets of which, for the preceding fiscal year, do not exceed $100 million." 13 CFR 121.13(a) (1986). Therefore, small entities to which the proposed rule would apply are the 1,651 insured institutions that had assets totaling $100 million or less as of December 31, 1986.

3. *Impact of the proposed rule on small institutions.* The rule would impose no new recordkeeping requirements or other additional administrative burden on any insured institution. The proposal would require small institutions, as well as all other institutions, to increase their capital to six percent of total liabilities at a faster rate than under the current regulation. This, however, is the purpose of the proposal. The Board therefore believes that the proposed rule would not have a significant or disproportionate economic impact on small institutions.

4. *Overlapping or conflicting federal rules.* There are no known federal rules that duplicate, overlap, or conflict with this proposal.

5. *Alternatives to the proposed rule.* The Board is not aware of any alternatives that would be less burdensome than the proposal in addressing the concerns expressed in the **SUPPLEMENTARY INFORMATION** set forth above. The Board has, however, specifically requested comments regarding such alternatives as well as the effective date and transition period under the proposal.

List of Subjects in 12 CFR Part 563

Bank deposit insurance, Investments, Reporting and recordkeeping requirements, Savings and loan associations.

Accordingly, the Board hereby proposes to amend Part 563, Subchapter D, Chapter V, Title 12, Code of Federal Regulations, as set forth below.

SUBCHAPTER D—FEDERAL SAVINGS AND LOAN INSURANCE CORPORATION

PART 563—OPERATIONS

1. The authority citation for Part 563 continues to read as follows:

Authority: Sec. 1, 47 Stat. 725, as amended (12 U.S.C. 1421 *et seq.*); sec. 5A, 47 Stat. 727, as added by sec. 1, 64 Stat. 256, as amended (12 U.S.C. 1425a); sec. 5B, 47 Stat. 727, as added by sec. 4, 80 Stat. 824, as amended (12 U.S.C. 1425b); sec. 17, 47 Stat. 736, as amended (12 U.S.C. 1437); sec. 2, 48 Stat. 128, as amended (12 U.S.C. 1462); sec. 5, 48 Stat. 132, as amended (12 U.S.C. 1464); secs. 401–407, 48 Stat. 1255–1260, as amended (12 U.S.C. 1724–1730); sec. 408, 82 Stat. 5, as amended U.S.C. (12 U.S.C. 1730a); Reorg. Plan No. 3 of 1947, 12 FR 4981, 3 CFR, 1943–1948 Comp., p. 1071.

2. Amend § 563.3–10 by revising paragraph (d) to read as follows:

§ 563.3–10 Earnings-based accounts.

* * * * *

(d) *Regulatory capital standard.* For purposes of paragraph (c)(1)(i) of this section, the term "regulatory capital requirement" means the greater of:

(1) An amount equal to three percent of total liabilities as defined in § 563.13(b)(1)(i) of this subchapter (i.e. total assets, net of loans in process, specific reserves, and deferred credits other than deferred taxes, minus regulatory capital as defined by § 561.13 of this subchapter);

(2) An insured institution's minimum regulatory capital requirement under § 563.13 of this subchapter; or

(3) Any regulatory capital requirement imposed upon an insured institution by a supervisory agreement or imposed as a condition to any consent or approval granted by the Board or the Corporation with respect to the insured institution.

* * * * *

3. Amend § 563.13 by removing the phrase "April calculation" where it appears in paragraph (b)(2)(v) (A), (B), and (C) of the section and by substituting in lieu thereof the phrase "annual calculation"; by revising paragraph (b)(2)(iv) to read as follows; and by removing paragraph (b)(7)(ii) and redesignating paragraph (b)(7)(iii) as the new paragraph (b)(7)(ii).

§ 563.13 Regulatory capital requirement.

* * * * *

(b) * * *

(2) *Calculation of base liabilities amount.* (i) * * *

(iv) "Annual calculation" means a percentage of the sum of the median return on assets of all insured institutions whose assets exceed their liabilities, as calculated under generally accepted accounting principles, for each of the four calendar year quarters ending on the June 30th preceding computation of the annual calculation. The percentage to be used for insured institutions in the standard group is 75 percent. The percentage to be used for insured institutions in the lower group is 90 percent. The Board will compute and publish the annual calculation in the fourth quarter of each calendar year based upon data for the four calendar year quarters ending on the June 30th preceding computation of the annual calculation.

* * * * *

By the Federal Home Loan Bank Board.

Jeff Sconyers,

Secretary.

[FR Doc. 87–14269 Filed 6–24–87; 8:45 am]

BILLING CODE 6701–01–M

SECURITIES AND EXCHANGE COMMISSION

17 CFR Part 240

[Release No. 34-24613; File No. S7-25-87]

Multiple Trading of Options

AGENCY: Securities and Exchange Commission.

ACTION: Proposed rule and public hearing.

SUMMARY: The Securities and Exchange Commission ("Commission") announces the commencement of a proceeding, including public hearings, to consider (i) whether to adopt a policy permitting multiple market trading ("multiple trading") of standardized options on exchange-listed securities; and (ii) whether to adopt a rule, which would amend the rules of national securities exchanges that provide a market in standardized options, to remove restrictions on multiple trading of standardized options on exchange-listed securities. The proposed rule would prohibit the rules of a national securities exchange from limiting the ability of that exchange to list such a standardized option because that option is listed on another national securities exchange.

DATES: Public hearings will be held on September 29, 1987, and will begin at 9:30 a.m. People wishing to appear at the hearing should contact Alice N. Rome, Esq., (202) 272-7379, not later than September 11, 1987. The schedule of appearances will be announced by the Commission shortly thereafter. People scheduled to appear should submit ten copies of their written statements by September 18, 1987. Others wishing to have their views considered in this proceeding should submit the original and two copies of their written comments by September 14, 1987.

ADDRESSES: Public hearings will be held in Room 1C30 at the Securities and Exchange Commission, 450 Fifth Street NW., Washington, DC 20549. All written comments should refer to File No. S7-25-87 and be addressed to Jonathan G. Katz, Secretary, Securities and Exchange Commission, at the above address. Copies of the written statements of the hearing participants should be sent to Alice N. Rome, Esq., Division of Market Regulation, also at the above address. Copies of all written submissions and the hearing transcript will be made available at the Commission's Public Reference Room, also at the above address.

FOR FURTHER INFORMATION CONTACT: Alice N. Rome, Esq. (202) 272-7379 or Holly H. Smith, Esq. (202) 272-2406, Securities and Exchange Commission, Division of Market Regulation, 450 Fifth Street NW., Washington, DC 20549.

SUPPLEMENTARY INFORMATION:

I. Introduction

Currently, the ability to trade options on an individual eligible exchange-listed stock is assigned to an options exchange pursuant to an allocation plan adopted by each of the options exchanges and sanctioned by the Commission ("Allocation Plan").[1] Except for a limited number of options on exchange-listed stocks that were multiply traded [2] before the voluntary moratorium on expansion of the options markets that began in mid-1977,[3] standardized options on exchange-listed stocks are traded on one exchange only. Although the Commission decided to defer a decision on whether to permit multiple trading in options on exchange-listed stocks at the termination of the voluntary options moratorium in 1980, the Commission has permitted multiple trading of all new options products approved for trading since that time, including options on over-the-counter ("OTC") securities [4] and on non-equity products.

In November 1986, the Commission released two staff studies on multiple trading of options.[5] The Staff Studies found that the spreads between the bid and the offer for options subject to multiple trading were significantly narrower than the spreads for options listed exclusively on one exchange. Both Staff Studies estimated substantial cost savings to investors as a result of those narrower spreads.[6]

In view of the evolution of the options markets since the decision to defer action on multiple trading in options on exchange-listed stocks, and the recent experience with multiple trading of options, in particular options on individual OTC stocks, the Commission has determined that rules of the options exchanges that restrict the multiple trading of options may not be consistent with the requirements of the Securities Exchange Act of 1934 ("Act").[7] In particular, the Commission is concerned that a system that allocates and restricts the trading in an options class to a single market may impose a burden on competition not necessary in furtherance of the purposes of the Act. Accordingly, the Commission today announces the commencement of a proceeding to consider (i) whether to establish a policy permitting the multiple trading of standardized options on all exchange-listed securities; and (ii) whether to adopt, pursuant to section 19(c) of the Act,[8] proposed Rule 19c-5 to amend the rules of national securities exchanges that provide a market for standardized options to prohibit the rules of an exchange from limiting the ability of that exchange to list a standardized option on an exchange-listed stock by virtue of the listing of that option on another national securities exchange. This rule would, in effect, repeal the Allocation Plan. In connection with this proceeding, the Commission will hold public hearings on September 29, 1987, commencing at 9:30 a.m., in Room 1C30 at the Commission's headquarters in Washington, DC. In addition to appearing at the scheduled public hearing, interested persons are invited to submit written presentations of views concerning the Commission's proposed multiple trading policy and proposed Rule 19c-5.

II. Previous Commission Action on Multiple Trading of Options

Beginning in 1976, limited experimentation in multiple trading of options occurred, and by early 1977, a total of 22 options classes were multiply

[1] *See* Securities Exchange Act Release No. 16863 (May 30, 1980), 45 FR 37928 ("Allocation Plan Approval Order"). The allocation plan permits options exchanges to select options on eligible exchange-listed stocks according to an order determined by an established numerical matrix.

[2] Multiple trading is the trading of standardized options with the same underlying security on more than one options marketplace with reliance on the market to allocate the trading interest in those options.

[3] The self-regulatory organizations ("SROs") agreed voluntarily to half expansion of standardized options trading in conjunction with the commencement of a Commission staff investigation into the options markets. *See* text accompanying note 12 *infra*.

[4] Multiple trading in certain options on OTC stocks commenced in June 1985, shortly after Commission approval of SRO proposals. *See, e.g.*, Securities Exchange Act Release Nos. 22098 (May 31, 1985), 50 FR 24075 (File Nos. SR-NYSE-84-4 and 85-18) and 22094 (May 31, 1985), 50 FR 23859 (File Nos. SR-Amex-83-33 and 85-12).

[5] These studies are Directorate of Economic and Policy Analysis, "The Effects of Multiple Trading on the Market for OTC Options," November 1986 ("DEPA Study"), and office of the Chief Economist, "Potential Competition and Actual Competition in the Options Market," November 1986 ("OCE Study") (referred to collectively as "Staff Studies" or "Studies"). These studies are available in the Commission's Public Reference Room.

[6] See DEPA Study, *supra* note 5 at 2-3, and OCE Study, *supra*, note 5, at 3.

[7] 15 U.S.C. 78a *et seq.* as amended by Pub. L. No. 94-29, 89 Stat. 97 (June 4, 1975).

[8] 15 U.S.C. 78s(c).

traded.[9] Also in early 1977, the Commission solicited comment and held hearings pursuant to a request by the Philadelphia Stock Exchange, Inc. ("Phlx") for a suspension of any further multiple trading.[10] Although no determination on whether further multiple trading should be permitted was made at that time, the Commission did issue a release expressing concern over increased proprietary floor trading in multiply-traded options to attract order flow and indicating that such trading may violate the anti-fraud provisions of the securities laws.[11] By the middle of that same year, the SROs had agreed to a voluntary moratorium on further expansion of the standardized options markets, pursuant to the Commission's request,[12] and the Commission announced the commencement of a comprehensive investigation of the options markets ("Options Study").[13]

While the report issued at the conclusion of the Options Study did not make any specific recommendations as to whether multiple options trading should be permitted,[14] it did find that multiple trading had a beneficial impact on prices of options, at least in the short term,[15] resulted in improved services and lower fees among competing exchanges, and offered the public a choice of markets in which to execute their orders.[16] Multiple trading, however, also was found to raise a number of concerns. One concern was market fragmentation, *i.e.*, the failure of any one market to reflect all the buying and selling interest in a security, resulting in possible price disparities between markets trading the same option.[17] The Options Study Report also indicated that multiple trading might hinder fair competition between brokers and dealers because of member firm practices to route automatically options order flow to the exchange with the greatest volume.[18] Finally, the Options Study Report raised the concern that multiple trading might threaten the financial viability of the regional exchanges that depended on revenues from their options trading programs.[19]

In the release terminating the options moratorium in 1980, the Commission stated that, although expansion of multiple trading raised fragmentation and fair competition concerns, "it presently is of the view that, under appropriate circumstances, the benefits of expansion of multiple trading appear to outweigh any adverse consequences." [20] However, the Commission also believed that the multiple trading concerns could be alleviated through the development of market integration facilities.[21] Therefore, the Commission deferred a decision on whether to permit expansion of multiple trading to allow the SROs the opportunity to consider the desirability of developing market integration facilities, specifically a public limit order exposure system.[22] Also, due to its determination to defer a decision on multiple trading and the limited number of attractive new underlying stocks eligible for standardized options trading, the Commission requested the options exchanges to develop a fair means for allocating the remaining options not then listed on any exchange.[23] Soon thereafter, the Commission approved the Allocation Plan.

In response to the Commission's request that the SROs study the feasibility of market integration facilities, the SROs formed a joint task force and concluded, in a report submitted to the Commission in 1981, that the market integration facilities envisioned by the Commission were not feasible at that time.[24] In particular, the SRO task force found that a limit order exposure system did not have the potential to reduce substantially the adverse effects of multiple trading.[25] Although the Commission did not endorse the report's findings, it recognized there was little prospect that the options markets would develop voluntarily market integration facilities at that time. As a result, options on exchange-listed stocks have continued to be allocated pursuant to the Allocation Plan, which has been in effect with little modification since its approval in 1980.[26]

When considering SRO proposals to trade options on new underlying products since the termination of the options moratorium, the Commission determined not to extend the allocation process to any of these new options products. Therefore, the Commission has permitted multiple trading in standardized options on stock indexes and non-equity products (collectively "non-equity options"), and in options on OTC stocks. In approving the Chicago Board Options Exchange, Inc. ("CBOE")

[9] *See* Report of the Special Study of the Options Markets to the Securities and Exchange Commission, Comm. Print 96-IFC3 (December 22, 1978), pp. 800-4 ("Options Study Report").

[10] *See* Securities Exchange Act Release No. 13325 (March 3, 1977), 11 SEC Docket 1886 (March 15, 1977).

[11] *See* Securities Exchange Act Release No. 13433 (April 5, 1977), 11 SEC Docket 2194 (April 19, 1977). Subsequently, the Commission brought an administrative proceeding and sanctioned options market makers on the American Stock Exchange, Inc. ("Amex") for fictitious trading in multiply-listed options. *See, e.g.*, Securities Exchange Act Release No. 13798 (July 22, 1977), 12 SEC Doclet 1375 (August 9, 1977).

[12] The number of multiply-traded options classes had decreased to 15 at the time of the options moratorium.

[13] *See* Securities Exchange Act Release Nos. 13760 (July 18, 1977), 42 FR 38035, and 14056 (October 17, 1977), 42 FR 56706. The Commission also commenced comprehensive disapproval proceedings on all expansionary options trading proposals that were outstanding. *See* Securities Exchange Act Release No. 14057 (October 17, 1977), 42 FR 56711. These proceedings were dismissed subsequently when the SROs withdrew their proposals. *See* Securities Exchange Act Release No. 15027 (August 3, 1978), 43 FR 35766.

[14] *See* Options Study Report, *supra* note 9.

[15] To evaluate the effects of multiple trading, the Options Study obtained data from each options exchange concerning the liquidity, continuity and depth in multiply-traded options for periods before and after the initiation of multiple trading.The data generated by this study showed an improvement in market quality in each respect. While the Options Study Report cautioned that the data obtained might not be sufficient to support broad conclusions, it concluded that they suggest that multiple trading may improve market quality, at least, in the short run. *See* Options Study Report, *supra* note 9, at 809-24.

[16] *See* Options Study Report, *supra* note 9, at 846-9.

[17] *See id.* at 849-52. One well-cited example was the instance in which one particular series of Bally options opened at $5 on one exchange and $10 on another. *Id.* at 839-43.

[18] *Id.* at 853-64.

[19] *Id.* at 867-70.

[20] Securities Exchange Act Release No. 16701 (March 26, 1980), 45 FR 21426, 21431.

[21] The Commision described three methods of market integration: (1) a market linkage similar to the Intermarket Trading System for equities, (2) individualized retail order routing by member firms, and (3) a public limit order exposure system. *See id.* at 21431-2.

[22] The Commission suggested that the SROs focus their analysis on a limit order exposure system, because the absence of a firm quotation rule for options posed a signficant obstacle to the development of the other proposed integration systems. The Commission proposed a limit order system that provided for (1) the direct entry and retrieval of public limit orders by broker-dealers either from on or off the exchange floor; (2) the queuing of such orders by price and time priority; (3) the summary display of all limit orders on each options exchange; and (4) the equal opportunity for automatic execution against those orders by floor members on all options exchanges. *See id.* at note 59.

[23] *See id.* at 21428.

[24] *See* Supplementary Report of the American, Pacific and Philadelphia Stock Exchanges and the Chicago Board Options Exchange in Response to Release No. 34-16701 (September 1, 1981).

[25] The SROs found that although limit orders were widely used in the options markets, relatively few of those orders were actually put in the limit order book and executed. Further, the SRO report claimed that diversion to the book of more limit orders would threaten market liquidity. *See* Interim Report of the American, Pacific and Philadelphia Stock Exchanges and the Chicago Board Options Exchange in Response to Release No. 34-16701 (January 8, 1981).

[26] In 1985, the New York Stock Exchange ("NYSE") joined the Allocation Plan. *See* Securities Exchange Act Release No. 22008 (May 1, 1985), 50 FR 19508.

plan to trade options on Government National Mortgage Association ("GNMA") securities in 1981,[27] the Commission considered the fact that no potential market for non-equity options had committed significant resources on the basis of an exclusive franchise in those options, and, therefore, there was no threat that multiple trading of GNMA options would disrupt the current market structure.[28] The Commission reaffirmed this position in a policy statement on multiple trading of non-equity options later that year, stating that "competitive forces should be permitted to define the structure of the non-equity options markets to the maximum extent possible."[29] The Commission has continued its policy of permitting the marketplace to allocate new options products in its approval of subsequent non-equity options proposals, including options on stock indexes,[30] Treasury securities,[31] and foreign currencies.[32]

Multiple trading was considered most recently when the National Association of Securities Dealers, Inc. ("NASD"), options exchanges, and NYSE proposed to trade options on OTC stocks.[33] In soliciting comment on these proposals, the Commission preliminarily expressed the view that, because of the benefits derived from multiple trading, its position on multiple trading of non-equity options should be extended to options on OTC stocks.[34] In the release indicating its approval in principle of the proposed trading programs for options on OTC stocks, the Commission determined that options on OTC stocks should be multiply-traded.[35] The Commission reasoned that, as with options on non-equity products, no marketplace relied on an exclusive franchise in OTC options for its financial viability, competition fostered development of options contracts best suited to the marketplace, multiple trading enchanced price competition in the short term, and multiple trading spurred development of improved services at the exchanges.[36] Most importantly, the Commission determined that even if one market dominated the trading in an option, that market would have been selected by offering a superior quality marketplace and not by mechanical allocation.[37] Finally, noting that market fragmentation in the absence of market integration facilities continued to be a concern, the Commission concluded that multiple trading would provide incentive for the markets to proceed with the development of those integration facilities.[38]

III. Multiple Trading Experience

In May and June 1985, the Commission approved SRO proposals to trade options on OTC stocks.[39] Initially, 9 of the 30 listings in options on OTC stocks were multiply-traded.[40] Within the first few weeks of multiple trading, the Amex captured the majority of the market share in each of the multiply-traded options on OTC stocks that it listed,[41] and within a few months of multiple trading the Amex had nearly a 90% market share in those multiply-traded options. Currently, only 2 of the original 9 multiply-traded options on OTC stocks continue to be multiply traded, with one exchange capturing nearly all of the order flow.[42] There also have been, however, some subsequent multiple listings for which a dominant market has not yet been determined.[43]

Retail broker-dealer firms continue to designate a primary exchange to which they route automatically all customer orders up to a certain size in multiply-traded options.[44] Firms have indicated to the Commission staff that the order routing decision is based on a variety of factors, including perceived quality of the market, execution services, and exchange fees. For the most part, the Commission understands that the primary market designation by broker-dealers was made before trading began in options of OTC stocks. Broker-dealer firms monitored executions in multiply-traded options on OTC stocks periodically throughout the first weeks of trading, and as a result, changed a few designations. Nevertheless, it appears that, with one significant exception, a dominant market in each option was established after a short period of intense price competition.[45]

The trading experience of options of OTC stocks has not shown significant price disparities in the markets for these multiply-traded options. For example, the DEPA Study examined over 1,000 executions in near-term series of multiply-listed options on OTC stocks during a one-week period two months after commencement of multiple trading,

[27] *See* Securities Exchjange Act Release No. 17577 (February 26, 1981), 45 FR 15242.

[28] *Id.* at 15245. The Commission simultaneously published for comment a New York Stock Exchange, Inc. ("NYSE") rule change proposal to trade nearly identical options contracts on GNMAs. *See* Securities Exchange Act Release No. 17578 (February 26, 1981), 46 FR 15245.

[29] *See* Securities Exchange Act Release No. 18297 (December 2, 1981), 46 FR 60376, 60377–8.

[30] *See* Securities Exchange Act Release No. 19264 (November 22, 1982), 47 FR 53981 (approving proposals to trade options on broad-based stock indexes) and Securities Exchange Act Release No. 20075 (August 12, 1983), 48 FR 37556 (approving Amex proposal to trade options on a series of narrow-based indexes).

[31] *See* Securities Exchange Act Release No. 19125 (October 14, 1982), 47 FR 46934.

[32] *See* Securities Exhange Act Release No. 19133 (October 14, 1982), 47 FR 46946 (approving Phlx foreign currency options program) and Securities Exchange Act Release No. 22471 (September 26, 1985) 50 FR 40636 (approval of CBOE foreign currency options program).

[33] The Commission solicited comment on multiple trading of equity options in connection with the NYSE's proposed entry into the individual equity options market. *See* Securities Exchange Act Release No. 20921 (May 2, 1984), 49 FR 19590. Commentators, particularly the options exchanges, expressed concern that the NYSE would exploit unfairly its dominant position in the equities market to gain a competitive advantage over other exchanges in a multiply-traded options environment. In particular, commentators were concerned that the NYSE would establish, explicitly or implicitly, tying arrangements to compel member firms to send their options orders in multiply-traded options to that exchange. *See* Securities Exchange Act Release No. 21759 (February 14, 1985), 50 FR 7250, 7256. Because the NYSE chose to participate with the options exchanges in the Allocation Plan, the concerns regarding NYSE entry into multiply-traded options environment were not before the Commission in its approval of the NYSE's options trading program. *Id.* at 7257.

[34] *See* Securities Exchange Act Release No. 20853 (April 12, 1984), 49 FR 15291.

[35] *See* Securities Exchange Act Release No. 22026 (May 8, 1985), 50 FR 20310.

[36] *Id.* at 20330–1.

[37] *Id.* at 20331.

[38] *Id.* at 20332.

[39] *See supra* note 4.

[40] The initial multiple listings were options on the following OTC stocks: Apollo Computer, Apple Computer, Chi-Chi's, DSC Communications, Intel, Intergraph, Lotus, Tandem Computers, and Genentech. The Amex listed each of these options except Genentech, which was multiply-listed by the CBOE and Pacific Stock Exchange, Inc. ("PSE"). The competition for order flow in Genentech between the PSE and the CBOE continued for six months, until PSE emerged as the primary market in that option.

[41] The Amex market share in the first month of trading in its multiply-traded options on OTC stocks was approximately as follows: Apollo, 72%* (June 1985)**; Apple, 77% (June 1985); Chi-Chi's, 94% (September 1985); DSC, 64% (June 1985); Intel, 81% (June 1985); Intergraph, 80% (June 1985); Lotus, 68% (July 1985); Tandem, 70% (June 1985).

*Percentage of all contracts traded in that option.

**First month of multiple trading.

[42] Those options are Apple and Genentech, in which the primary market now accounts for more than 99% of the volume traded.

[43] Both the Amex and PSE trade options on Reebok (May 1986), Mentor and Microsoft (March 1987). The PSE has captured slightly more than one-half of the market share in Mentor and Microsoft at this time. The Amex, however, has dominated the market in Reebok since dual trading commenced.

[44] Customer options orders in multiply-traded options above a certain size would receive "special handling," which may involve manually checking the markets on the competing exchange(s) to find the best market for that order.

[45] One example of the challenge to a primary market designation occurred in Genentech. The CBOE had been designated as the primary exchange for that option by many retail broker-dealer firms; however, the PSE was able to challenge successfully the CBOE, and ultimately caused firms to switch their designation. The CBOE continues to list Genentech, but its market share is less than 1%.

and found only three instances of apparent pricing disparities.[46] Moreover, the Commission has been informed by several major retail firms that few customer complaints have been generated by the multiple trading of options on OTC stocks.

IV. Commission Staff Studies on Multiple Trading

In November 1986, the Commission released two Staff Studies on multiple trading in options.[47] Both of the Staff Studies examined the spreads in options listed on the Amex that were (i) subject to multiple trading; and (ii) listed solely on that exchange. Both Staff Studies concluded that the spreads in multiply-traded options were significantly narrower than those in singly-listed options, notwithstanding the concentration of volume in the multiply-traded options on the Amex. As a result of the narrower spreads, both Staff Studies estimated cost savings from multiple trading. The DEPA Study estimated that multiple trading in options on OTC securities had saved investors who bought or sold these options $25 million from June 1985 to May 1986.[48] The OCE Study predicted that extension of multiple trading to all individual equity options would result in annual savings of $150 million to all investors.[49]

The DEPA Study examined the spreads in Amex-listed options on OTC stocks, for which multiple trading is permitted, and the spreads in Amex options on exchange-listed stocks, which are singly-listed, for three sample periods, a week in September 1985, two days in June 1985, shortly after options on OTC stocks began trading, and two days in March 1986, after the volume in OTC stock options had concentrated on one exchange.[50] The DEPA Study included in its sample the near-term call and put series in options on 9 OTC and 36 exchange-listed stocks. After applying regression analysis to the sample data to control for the effects of other factors on spread size, the DEPA Study found that the spreads in multiply-traded options were on average 19.8% narrower than the spreads in the singly-traded options.[51]

The OCE Study compared spreads in multiply-traded options on OTC stocks and options on exchange-listed stocks that have been multiply-traded since 1977 with the spreads in singly-traded options on exchange-listed stocks,[52] over three one-week time periods in September 1985, January 1986, and April 1986, including only the near-term at-the-money call series of these options classes in its analysis.[53] The OCE Study applied regression analysis to this sample data also, and determined that multiple trading reduced spreads by as much as 20% in low volume options.[54] The measurable impact of multiple trading on spreads diminishes, and ultimately disappears, the OCE Study found, as options volume increases to a certain level.[55] Finally, the OCE Study concluded that its findings on multiply-traded options spreads support the theory of "contestable markets," which postulates that potential competitors can provide effective competition.[56]

The Commission has received comment letters on the Staff Studies from each of the options exchanges and the NYSE.[57] The NYSE and the Amex generally expressed their support for inter-market competition in individual equity options classes, but did not discuss the Staff Studies specifically.[58] The Amex also recommended that the Commission give prompt consideration to abolition of the Allocation Plan for new listings of options on exchange-listed stocks.[59] The CBOE, Phlx, and PSE, however, each expressed doubt as to whether the Staff Studies could support the conclusions about the effects of multiple trading,[60] and offered similar criticisms on the Staff Studies' methodology and conclusions. In particular, they pointed out that the Staff Studies failed to explore whether the difference in spreads between multiple- and single-listed options that are attributed to the options' listing characteristics also might be caused by characteristics of the options' undelying security market, that actual transaction execution prices, not bid-ask spreads, are the appropriate measure of competition on options prices, that the Staff Studies' sample sizes were inadequate, and, finally, assuming the Staff Studies' conclusions were accepted, that they overestimated the cost savings from multiple trading.[61]

Both DEPA and OCE do not believe that the criticisms offered by the exchange-sponsored studies seriously challenge the validity of their findings. DEPA performed some further analysis based on the commentators' suggestions and found that its results were unchanged. OCE determined that most of these criticisms already had been anticipated in its original analysis.[62] The Commission believes that the Staff Studies provide evidence that multiple trading may be beneficial to the options markets; in any event multiple trading

---

[46] *See* DEPA Study, *supra* note 5, at 21. DEPA examined all trades in OTC option series which were traded on two or more exchanges during the week of September 9–13, 1985, and which had an October 1985 expiration date. DEPA counted, as trades involving possible pricing disparities, trades executed up to 5 minutes apart.

[47] *See supra* note 5.

[48] *See* DEPA Study, *supra* note 5, at 2.

[49] *See* OCE Study, *supra* note 5, at 2.

[50] *See* DEPA Study, *supra* note 5, at 4.

[51] *Id.* at 9. Additional analysis showed that a large proportion of trades are executed inside the quoted spread, so that a difference exists between quoted spreads and spreads realized as a result of actual excecutions. DEPA calculated a "realized spread" equal to the difference between the midpoint of the bid-ask quote (equilibrium price) and the actual execution price. Results from regression analysis using realized spreads were consistent with those from the analysis of quoted spreads. These results showed that options eligible for multiple trading were executed at a price 3.4 percentage points closer to the equilibrium price than were options not eligible for multiple trading.

[52] The OCE Study included data on multiply-traded options on 9 OTC stocks, multiply-traded options on 7 exchange-listed stocks, and singly-traded options on 27 exchange-listed stocks. *See* OCE Study, *supra* note 5, at 25.

[53] *Id.* at 12–13.

[54] *Id.* at 17–18, 24.

[55] The OCE Study estimated that volume level to be approximately 1,500 contracts per day. *Id.* at 18, 24.

[56] *Id.* at 2, 23. The OCE Study describes a perfectly contestable market as one in which both entrance and exit are costless, *i.e.*, all entry costs be recouped upon exit. *Id.* at 6.

[57] The Division of Market Regulation ("Division") sent letters to each of the registered securities exchanges that trade options and to the NASD soliciting their views on the studies. *See* letter from Richard G. Ketchum, Director, Division, SEC, to Robert J. Birnbaum, President, NYSE, *et al.*, dated November 20, 1986. The SROs responded in letters from Robert J. Birnbaum, President, NYSE, to Richard G. Ketchum, Director, Division, dated January 30, 1987 ("NYSE letter"); Kenneth R. Leibler, President, Amex, to Richard G. Ketchum, Director, Division, dated February 6, 1987 ("Amex letter"); Alger B. Chapman, Chairman, CBOE, to Richard Ketchum, Director, Division, dated February 11, 1987 ("CBOE letter"); Nicholas A. Giordano, President, Phlx, to Richard G. Ketchum, Director, Division, dated February 13, 1987 ("Phlx letter"); and Jim Gallagher, President, PSE, to Richard G. Ketchum, Director, Division, dated March 4, 1987 ("PSE letter"). These letters, and accompanying critiques (*see supra* note 60), are available in the public file for this proceeding.

[58] *See* NYSE and Amex letters, *supra* note 57.

[59] *See* Amex letter, *supra* note 57, at 2.

[60] Each submitted with its comment letter a critique of the Studies prepared by an economist retained for that purpose. *See* Comment on SEC Staff Studies of Multiple Trading of Options, by Hans R. Stoll, February 5, 1987, accompanying CBOE letter; memorandum concerning SEC Staff Studies of Multiple Trading in Options, by Seymour Smidt, February 9, 1987, accompanying Phlx letter; and Competitively of Options Trading Under the Options Allocation Plan, by Professor Gregory Connor, accompanying the PSE letter.

[61] *See* CBOE letter, *supra* note 57, at 1; Phlx letter, *supra* note 57, at 3; and PSE letter, *supra* note 57, at 2.

[62] Both DEPA and OCE have prepared detailed responses to the criticisms offered by the exchange-sponsored studies. These responses are available in the public file for this proceeding.

has not resulted in any deterioration of those markets. The Commission wishes to emphasize, nonetheless, that the primary basis for commencing this proceeding is its preliminary belief that allocation of options order flow by means of a mechanical lottery imposes a burden on competition not necessary in furtherance of the purposes of the Act.

V. Discussion

When the Commission determined to terminate the voluntary moratorium on the expansion of options trading, it believed that the multiple trading of options was, on balance, beneficial. It deferred a decision on expansion of multiple trading, however, to explore whether the SROs wished to develop market integration systems which might reduce costs associated with market fragmentation and enhance the ability of the markets to compete fairly in a multiple trading environment. Although the Commission has continued to defer a decision on multiple trading of options on exchange-listed stocks, particularly in view of the absence of facilities integrating the options markets, it has favored competitive listing of all new options products that have been approved for trading since the termination of the options moratorium, including options on individual OTC securities. In light of that new product experience and the Commission's belief that market integration facilities are unlikely to be built voluntarily if they are a prerequisite to multiple trading, the Commission has determined that it is appropriate to review its deferral of the multiple trading of options on listed securities.[63]

The Commission continues to believe that substantial benefits may be obtained from multiple trading of options. The Staff Studies indicate that, despite the dominance of a particular options market in each multiply-traded equity option, investors may benefit from improved prices in those options as a result of multiple trading. Also, competition among markets as to functionally similar non-equity options products has demonstrated the further benefits of improved execution and clearing services on competing exchanges and innovation in product design.[64]

The Commission further notes that the markets have had a two-year experience with multiple trading in options on individual OTC stocks and the Commission has been unable to identify any specific harm to the markets from that experience. There were no indications of significant price disparities between the different markets in the same individual option, or problems with achieving best execution of customer orders in the multiply-traded options.[65] While the Commission recognizes that order-by-order competition for retail-sized orders continues to be impractical in the absence of market integration facilities, broker-dealer firms, in making their order-routing determinations, appear to engage in a good faith evaluation of the liquidity and general operational capabilities of each competing marketplace. hile these determinations are not foolproof, they are based on an assessment of market quality rather than on a mechanical allocation that does not distinguish among markets.

The Commission also cannot conclude, at this time, that the expansion of options multiple trading will have a major structural impact on the options market.[66] Historically, once a market has emerged predominant, firms have reallocated their retail order flow only under extraordinary circumstances.[67] Thus, the Commission questions whether competitive forces will shift order flow in an option class from trading one market to another barring serious operational problems or a significant deterioration of the quality of the market in that option class. But, whether or not that shift should occur, the Commission preliminarily believes that the restraint imposed by the Allocation Plan on intermarket competition in options on listed securities is unnecessary.

The Commission recognizes that commentators previously have argued that the NYSE, as the primary market for most listed securities underlying options, would have unfair competitive advantages over the other options exchanges. In particular, the options exchanges have argued that firms might route their options order flow to the NYSE because of fears that member specialists might otherwise provide them inferior executions or other service in listed stocks as retribution. Similarly, they have argued that the NYSE's predominant position in listed stocks will permit the NYSE to subsidize its options market and thus engage in predatory price competition with the other options exchanges.

Trading in options on OTC stocks to date has not demonstrated that the NYSE holds any unfair competitive advantage. Indeed, as discussed above, the NYSE has not been successful in becoming the predominant market in any multiply-traded OTC options.[68]

---

[63] The Commission continues to believe that market integration facilities may be beneficial in a multiple trading environment. However, the Commission has determined not to continue to delay reconsideration of the expansion of multiple trading of options on exchange-listed stocks because of the absence of such facilities. Nevertheless, the Commission solicits comment on the costs and benefits of market integration facilities in the current market structure.

[64] For example, the CBOE developed and installed for the Standard and Poor's 100 index option its Retail Automatic Execution System ("RAES"), which automatically executes, at the best disseminated bid or offer, public customers' market or marketable limit orders up to 10 contracts. It then extended the system on a pilot basis to the Standard and Poor's 500 index ("SPX") and to selected equity options. *See* Securities Exchange Act Release Nos. 23490 (August 1, 1986), 51 FR 28788; and 23590 (September 4, 1986), 51 FR 32709. The Amex put in place a comparable system for its Major Market Index option and Institutional Index option ("XII"). *See* Securities Exchange Act Release Nos. 23544 (August 20, 1986), 51 FR 30601; and 23573 (August 28, 1986), 51 FR 31859. In addition to improving execution, reporting and clearance efficiency, these automatic execution systems also provide, in effect, firm quotations for customer orders up to the contract size authorized for execution in the system. Moreover, the CBOE has had moderate success in increasing volume in the SPX, which competes with the Amex's XII for institutional order flow, by converting it to a European-style option, *i.e.*, prohibiting early exercise of the option. *See* Securities Exchange Act Release No. 22309 (August 9, 1985), 50 FR 32934.

[65] It has been argued that, because options involve multiple series, it is impossible to update the series in a timely manner so as to facilitate intermarket quote competition. Today, however, the various options markets are experimenting with so-called "Autoquote" systems to develop more rapid quote update capabilities.

[66] As the Commission has stated in the past, it believes its responsibility under the Act is to promote fair competition among markets and market participants, not to ensure the viability of any particular marketplace or participant. *See, e.g.*, Securities Exchange Act Release No. 22026 (May 8, 1985), 50 FR 20310, 20331. *See also* Senate Committee on Banking, Housing and Urban Affairs Report to Accompany S. 249, Securities Act Amendments of 1975, S. Rep. No. 94-75, 94th Cong., 1st Sess. 13-14 (1975).

[67] In 1978, Merrill Lynch switched its primary market designation in the multiply-traded options on American Express, Bally Manufacturing, Digital Equipment and National Semiconductor Corporation ("National Semiconductor") to the Amex from the CBOE because of operational difficulties it experienced on the CBOE. As a result, the Amex became the primary market in each of these options, except National Semiconductor. *See* Options Study Report, *supra* note 9, 837-8. More recently in the fall of 1984, the Amex attempted to challenge the CBOE's dominance in National Semiconductor options by actively soliciting business in those options. The Amex market share in National Semiconductor increased from less than 10% to more than 30% by year-end; however, the Amex was unable to sustain the challenge. The CBOE continues to be the primary market in National Semiconductor.

[68] While options on listed securities differ from options on OTC securities in that the NYSE generally will be the primary market for the underlying security, theoretical opportunities for predatory price subsidization or tying would appear to exist in either case.

Moreover, given existing competition among stock markets, the Commission questions whether NYSE specialists would risk providing inferior executions or other service to firms that route their options orders to other markets. Finally, the Commission believes that it is inappropriate to presume, as the basis of a regulatory decision, that the NYSE will engage in predatory acts, particularly where there is no indication that the NYSE has engaged in such activity in the past. Therefore, commentators may wish to discuss the competitive impact of NYSE participation in multiple trading.

Accordingly, the Commission preliminarily believes that the Allocation Plan, which requires the allocation by lottery of new listings of options on exchange-listed stocks, imposes a "burden on competition not necessary or appropriate in furtherance of the purposes of" the Act.[69] Similarly, the Commission preliminarily believes that its continued deferral of multiple trading for existing classes of options on exchange-listed stocks is no longer consistent with enhancing "fair competition among brokers and dealers [and] among exchange markets" [70] or the "economically efficient execution of securities transactions." [71] Therefore, the Commission is proposing to review its present deferral of multiple trading in options on listed stocks, and to announce a policy permitting an options market to trade any options on any security that meets its eligibility standards. The Commission also believes it is appropriate to commence a proceeding under Section 19(c) of the Act [72] to amend the rules of the registered national securities exchanges that provide a market for standardized options to permit the multiple trading of options on exchange-listed stocks.[73] Proposed Rule 19c-5 would prohibit any rule, stated policy, practice, or interpretation of an options exchange from preventing that exchange from listing any standardized option on an exchange-listed security by virtue of the listing of that option on any other exchange.[74] Therefore, if adopted, proposed Rule 19c-5 would remove the prohibition on multiple trading of any future options listing imposed by the Allocation Plan, and, further, it would lift any restrictions on the multiple trading of an option that already is listed on an exchange which may be imposed by the Allocation Plan or any other exchange rule.[75]

Commentators are invited to submit written comments on both the Commission's proposed options multiple trading policy and proposed Rule 19c-5, or on any other issues discussed in this release. In addition, those wishing to appear at the public hearing concerning this proceeding may express their desire to do so by following the procedures described above.

Cost and Benefits

Proposed Rule 19c-5 would remove the restrictions on the competitive trading of certain standardized options among the national securities exchanges. By facilitating increased competition in the options markets, the proposed rule may result in benefits such as narrower options quotation spreads, enhanced execution and clearing services among the competing exchanges, and a choice of alternative markets in which to execute investor options orders. However, because the proposed rule also would permit the development of several competing markets for a single option class, broker-dealers may incur additional costs in checking multiple markets in the execution of customer orders in multiply-traded options. Also, the proposed rule might result in costs to certain options exchanges that would lose order flow and revenues as a result of competitive options trading. Finally, it is possible that the proposed rule may have an impact on options market efficiency. Accordingly, the Commission is requesting commentators specifically to discuss the costs and benefits of this proposal.

VI. Initial Regulatory Flexibility Analysis

The Regulatory Flexibility Act may not apply to rules proposed for adoption pursuant to section 19(c) of the Act. Nevertheless, an Initial Regulatory Flexibility Analysis ("IRFA") has been prepared in acordance with 5 U.S.C. 603 regarding proposed Rule 19c-5. The IRFA uses certain definitions of "small entities" adopted by the Commission for purposes of the Regulatory Flexibility Act. The IRFA notes that the proposed rule would amend the rules of national securities exchanges that provide a market for standardized options to remove any impediments imposed by those rules on the multiple trading of options on exchange-listed stocks, and is designed to remove burdens on competition that do not further legitimate objectives of the Act. The IRFA further notes that the proposed rule would not apply to exchanges that fall within the definition of "small entity" for purposes of the Regulatory Flexibility Act. The IRFA also points out, for example, that the proposed Rule, if adopted, might have an economic impact on certain small broker-dealers that make markets in options on an exchange. It is possible that an exchange that previously held an exclusive franchise to trade a particular option might lose substantial order flow because of competitive trading in that options class. As a result there may be insufficient trading interest in that marketplace to support all existing market makers. Such economic impact appears to be speculative, however, because those market makers might determine to trade other products or to commence market making on another exchange that had attracted the majority of the options order flow. The Commission encourages the submission of comments on any aspect of the IRFA. A copy of the Initial Regulatory Flexibility Analysis may be obtained by contacting Alice N. Rome, Special Counsel, (202) 272-7379, Division of Market Regulation, Mail Stop 5-1, Securities and Exchange Commission, Washington, DC 20549.

VII. Statutory Basis and Text of Proposed Rule

In accordance with the foregoing, 17 CFR Part 240 is proposed to be amended as follows:

PART 240—GENERAL RULES AND REGULATIONS, SECURITIES EXCHANGE ACT OF 1934

1. The authority citation for Part 240 is amended by adding the following citations:

Authority: Sec. 23, 48 Stat. 901; as amended; 15 U.S.C. 78w * * * § 240.19c-5

---

[69] *See* sections 6(b)(8) and 23(a)(2) of the Act [15 U.S.C. 78f(b)(8) and w(a)(2)].

[70] *See* section 11A(a)(1)(C)(ii) of the Act [15 U.S.C. 78k-1(a)(1)(C)(ii)].

[71] *See* section 11A(a)(1)(C)(i) of the Act [15 U.S.C. 78k-1(a)(1)(C)(i)].

[72] 15 U.S.C. 78s(c).

[73] In addition to sections 19 and 23 of the Act [15 U.S.C. 78s and 78w], the Commission is proposing this rule under its authority to regulate options trading in section 9 of the Act [15 U.S.C. 78i].

[74] Because proposed Rule 19c-5 is drafted to remove exchange prohibitions on multiple trading of an option "by virtue of" the listing of that option on another exchange, it would not prevent an exchange from continuing to enforce a policy not to list options overlying securities that are listed on that exchange. Also, the proposed rule, of course, would not limit an options exchange's ability to choose, as a business matter, not to trade options already listed on another exchange.

[75] The Allocation Plan, which was approved by the Commission pursuant to Section 19(b) of the Act [15 U.S.C. 78s(b)], is a rule of each options exchange, as defined in section 3(a)(27) of the Act [15 U.S.C. 78c(a)(27)]. *See, e.g.*, Allocation Plan Approval Order, *supra* note 1. The exchanges participating in the Allocation Plan are the Amex, CBOE, NYSE, PSE and Phlx.

also issued under secs. 2, and 19, 48 Stat. 881, and 898, as amended, 15 U.S.C. 78b, and 78s.

2. By adding § 240.19c-5 as follows:

§ 240.19c-5 Governing the multiple listing of options on national securities exchanges.

(a) The rules of each national securities exchange that provides a trading market in put or call options issued by the Options Clearing Corporation shall provide as follows:

(1) No rule, stated policy, practice, or interpretation of this exchange shall prohibit, condition, or otherwise limit the ability of this exchange to list a put or call option on an exchange-listed security issued by the Options Clearing Corporation by virtue of the listing of that option on another exchange.

(b) For purposes of this section, the term "exchange" shall mean a national securities exchange, registered as such with the Commission pursuant to section 6 of the Securities Exchange Act of 1934, as amended.

Dated: June 18, 1987.

By the Commission.

Jonathan G. Katz,

Secretary.

[FR Doc. 87-14437 Filed 6-24-87; 8:45 am]

BILLING CODE 8010-01-M

---

17 CFR Part 240

[Release No. 34-24607; IC-15817; File No. S7-23-87]

Facilitating Shareholder Communications—Proposal Excluding Certain Employee Benefit Plan Participants From Application of the Proxy Processing and Direct Communications Provisions

AGENCY: Securities and Exchange Commission.

ACTION: Proposed rules.

SUMMARY: The Securities and Exchange Commission ("Commission") today is publishing for comment proposals that would exclude, under specified circumstances, employee benefit plan participants from the operation of the proxy processing and/or direct communications provisions of the shareholder communications rules. The Commission is considering these proposals for the treatment of plan participants under the shareholder communications rules in addition to the alternatives previously proposed in Release No. 34-24274.

Under the proposals published today, beneficial owners who are employee benefit plan participants would be excluded from the proxy processing provisions with respect to securities of a registrant held in nominee name pursuant to the plan, if the registrant has access to the names and addresses of such participants by some means other than the direct communications provisions and the registrant is not prohibited by the terms of the plan from communicating directly with such participants. Registrants would be required to notify brokers and dealers ("brokers") and banks, associations and other entities that exercise fiduciary powers ("banks") of plans satisfying these prerequisites. Once a broker or bank receives notice, it would not include such plan participants when fulfilling its obligations with respect to those registrants under the proxy processing provisions. Registrants would be required to cause proxy material [1] to be furnished, in a timely manner, to plan participants excluded from the operation of the proxy processing provisions.

With respect to the direct communications provisions, under the proposed amendments a registrant's request for a list of beneficial owners would not include plan participants if it has access to the names and addresses of such beneficial owners through some means other than the direct communications provisions. Registrants would be required to notify brokers and banks of plans satisfying this prerequisite. Once notice is received by a broker or bank, it would not include such plan participants in providing lists of beneficial owners to those registrants.

Finally, the Commission is proposing to amend the definition of employee benefit plans, for purposes of the shareholder communications rules, to include those plans that are primarily established for employees but also include other persons, such as consultants.

DATE: Comments should be received on or before August 10, 1987.

ADDRESS: Comments should be submitted in triplicate to Jonathan G. Katz, Secretary, Securities and Exchange Commission, 450 Fifth Street, NW., Washington, DC 20549. Comment letters should refer to File No. S7-23-87. All comment letters received will be available for public inspection and copying in the Commission's Public Reference Room, 450 Fifth Street, N.W, Washington, DC 20459.

FOR FURTHER INFORMATION CONTACT: Sarah A. Miller or Barbara J. Green, (202) 272-2589, Office of Disclosure Policy, Division of Corporation Finance, Securities and Exchange Commission, 450 Fifth Street, NW., Washington, DC 20549.

SUPPLEMENTARY INFORMATION: The Commission is publishing for comment proposed revisions to Rules 14a-1,[2] 14a-13,[3] 14b-1,[4] 14b-2,[5] 14c-1[6] and 14c-7.[7]

I. Executive Summary

On November 25, 1986, the Commission adopted new shareholder communications rules and related amendments [8] to effect the Shareholder Communications Act of 1985.[9] The new rules set forth the obligations of banks in connection with forwarding proxy materials to beneficial owners and facilitating registrants' communications with beneficial owners of securities registered in the banks' names. At the time it adopted the new rules, the Commission indicated that it would consider application of the shareholder communications rules to employee benefit plans in a separate rulemaking proceeding.

On March 27, 1987, the Commission issued a release proposing rules for excluding certain employee benefit plan participants from the proxy processing and direct communications provisions, at the option of the registrant.[10] Specifically, under those proposals, the registrant could choose to exclude plan participants with securities held in nominee name pursuant to the plan from the proxy processing system established under the shareholder communications rules, where the plan contains a mechanism for timely dissemination of proxy material to plan participants and action is taken reasonably calculated to assure that plan participants receive such materials in accordance with that mechanism. With regard to the direct communications provisions, the proposals provided that a registrant would not be required to include plan participants in a request for a list of beneficial owners, if the registrant has access, by some means other than the direct communications provisions, to the names and addresses of the plan participants.

---

[1] The phrase "proxy material" is used in this release to refer collectively to proxy cards or requests for voting instructions, proxy soliciting material and annual reports to security holders.

[2] 17 CFR 240.14a-1.

[3] 17 CFR 240.14a-13.

[4] 17 CFR 240.14b-1.

[5] 17 CFR 240.14b-2.

[6] 17 CFR 240.14c-1.

[7] 17 CFR 240.14c-7.

[8] Release No. 34-23847 (November 25, 1986) (51 FR 44267).

[9] Pub. L. No. 99-222, 99 Stat. 1737 (1985), amending 15 U.S.C. 78n(b) (1982).

[10] Release No. 34-24274 (March 27, 1987) (52 FR 11083).

In addition, the release set forth a number of alternatives to the proposal. These alternatives included: (1) Making one or both of the exclusions mandatory rather than optional; (2) basing automatic or optional exclusion from the shareholder communications rules on satisfaction of both prerequisites; (3) basing automatic or optional exclusion on satisfaction of only one prerequisite; and (4) an automatic across-the-board mandatory exclusion of employee benefit plan participants from all aspects of the proxy processing and direct communications systems.

On the 21 commentators responding to the Commission's request for comment,[11] 16 favored mandatory exclusion of plan participants from the proxy processing system. These commentators supported mandatory exclusion either of all employee benefit plan participants on an automatic across-the-board basis or of participants in plans where the plan contains a mechanism for disseminating proxy material to plan participants in a timely manner. Two commentators favored an exclusion at the option of the registrant. One commentator, the American Bankers Association ("ABA"), suggested another approach to excluding plan participants. This commentator recommended an amendment to the proxy processing provisions that would make registrants solely responsible for ensuring that proxy cards and proxy soliciting materials are distributed to participants who hold securities of the registrant in nominee name pursuant to an employee benefit plan that provides pass-through voting (the "ABA approach"). Another commentator, the Department of Labor, stated that it had no objection to the approach suggested by the ABA. Finally, one commentator opposed on recordkeeping grounds any exclusion of plan participants from the proxy processing system.

With respect to the direct communications provisions, 15 of the 18 commentators who addressed the proposals relating to those provisions endorsed mandatory exclusion of plan participants. These commentators supported exclusion either of all employee benefit plan participants on an automatic across-the-board basis or of participants in plans where the registrant has access, by some means other than the direct communications provisions, to the names and addresses of the participants.

The Commission has determined that the ABA approach should be considered in addition to the range of alternatives contained in Release No. 34-24274.[12] Accordingly, this release seeks comment on a proposal, reflecting the ABA approach, with respect to the treatment of plan participants under the proxy processing provisions. The release also seeks further public comment on the treatment of employee benefit plan participants under the direct communications provisions.

The rule proposals specify conditions under which registrants would not furnish, under Rule 14a-13(a),[13] proxy material to record holders and respondent banks for distribution to beneficial owners who are participants in an employee benefit plan with securities held in nominee name pursuant to the plan. Specifically, a registrant would not forward proxy material to plan participants through brokers or banks if: (1) The registrant has access to the names and addresses of such beneficial owners by some means other than the direct communications provisions of Rule 14a-13(b);[14] and (2) the registrant is not prohibited by the terms of the plan from communicating directly with such plan participants. Registrants would be required, however, to cause proxy material to be furnished to plan participants. Further, registrants would be required to notify record holders and respondent banks [15] of those plans with participants who are not included in the proxy processing provisions with respect to their holdings of the registrant's securities. Once a record holder or respondent bank receives such notice, it would not include such plan participants when fulfilling its obligations under the proxy processing provisions with respect to those registrants.

Under the rule proposals, registrants' requests for lists of beneficial owners would not cover certain employee benefit plan participants with securities held in nominee name pursuant to an employee benefit plan. Just as for the proxy processing provisions, the exclusion would be conditioned on registrant access, by some means other than the direct communications provisions of paragraph (b) of Rule 14a-13, to the names and addresses of the plan participants. Registrants would be required to notify record holders and respondent banks of those plans satisfying that access prerequisite. Once such notice is received by a record holder or respondent bank, it would not include participants in such a plan in lists of beneficial owners provided to those registrants.

The Commission is continuing to consider the rule proposals and alternatives suggested in Release No. 34-24274, as well as the proposals published today. The Commission may determine that the goal of ensuring that voting plan participants, like other security holders, receive proxy materials on a timely basis and in a cost effective manner may best be met by adopting any or a combination of the proposals set forth in the two releases.

Finally, the Commission is proposing to amend the definition of employee benefit plan applicable to the shareholder communications rules. The proposal would expand the term to cover plans established primarily for employees, but including other persons.

II. Discussion

A. Proxy Processing Provisions

1. Release No. 34-24274 Proposals

The proposals regarding exclusion of employee benefit plan participants from the proxy processing provisions of the shareholder communications rules contained in Release No. 34-24274 were intended to avoid duplicative mailing of proxy materials to plan participants in accordance with both the specific plan provisions and the shareholder communications rules, while, at the same time, ensuring that plan participants receive proxy material to the same extent as other beneficial owners.

Two commentators addressed the extent to which plans contain a mechanism under which the registrant or other person designated in the plan obtains and supplies, in a timely manner, proxy material to beneficial owners who are employee benefit plan participants. One commentator stated that most employee benefit plans that provide for pass-through voting by participants specify dissemination procedures. On the other hand, another commentator stated that employee benefit plans very widely in the amount

[11] The comment letters are available for public inspection and copying at the Commission's Public Reference Room (*see* File No. S7-11-87).

[12] Pending the Commission's further consideration of the manner in which employee benefit plan participants will be treated under the shareholder communications rules, application of the bank proxy processing provisions to such beneficial owners is being deferred. The Commission today adopted Rule 14b-2(j) to defer temporarily imposing on banks an obligation under the shareholder communications rules to distribute proxy material to employee benefit plan participants with respect to securities held in nominee name by banks. Corollary amendments to Rules 14a-13 and 14c-7 temporarily relieve registrants of their corresponding obligations under the shareholder communications rules with respect to such beneficial owners. Release No. 34-24606.

[13] 17 CFR 240.14a-13(a).

[14] 17 CFR 240.14a-13(b).

[15] *See* definition of respondent bank, Rule 14a-1(j), 17 CFR 240.14a-1(j).

of specificity they contain regarding the delivery of proxy cards and materials and that the majority of plans do not contain specific procedures for forwarding such materials to plan participants. If plans generally do not contain specific procedures for forwarding proxy material, the Commission's previous proposals unintentionally would have required substantial amendments to be made to most plan documents in order to take advantage of the proposed exclusion. The Commission seeks further public comment clarifying whether or not employee benefit plans that provide for pass-through voting do, in fact, contain specific procedures for obtaining and forwarding proxy material to plan participants or impose delivery obligations on registrants or other persons named in the plan document.

2. Alternative Rule Proposal

The proposal published today would exclude, under certain circumstances, employee benefit plan participants from the proxy processing provisions whether or not the plan contains a specific delivery mechanism. The proposal also would impose on the registrant an obligation to ensure delivery of proxy material to plan participants excluded from the proxy processing provisions. Accordingly, this proposal, if adopted, would not require amendments to plans but would ensure that plan participants receive proxy material.

The proposal would add a proviso to paragraph (a)(2) of Rule 14a-13 specifying that a registrant's Rule 14a13 (a)(1) [16] and (a)(2) [17] search card inquiry shall not cover beneficial owners [18] who are employee benefit plan participants or beneficiaries (with respect to securities of the registrant held in nominee name pursuant to the plan) where two criteria are met. These criteria, which would be set forth in paragraph (d) of the Rule, are that: (1) the registrant has access, by some means other than pursuant to paragraph (b) of Rule 14a-13, to the names and addresses of such beneficial owners; and (2) the registrant is not prohibited by the terms of the plan from communicating directly with such plan participants. Because all other proxy processing obligations of the registrant are derived from the Rule 14a-13(a)(1) and (a)(2) search card inquiry, no other revisions would be required to exclude employee benefit plan participants from the proxy processing procedures.

Proposed paragraph (d) to Rule 14a-13 would require that a registrant cause proxy material to be furnished, in a timely manner, to beneficial owners who are employee benefit plan participants excluded from the operation of the proxy processing provisions of the shareholder communications rules because they meet the two specified criteria. [19] Under this provision, a registrant could adopt in-house procedures to perform its obligations under proposed paragraph (d) of Rule 14a-13 or designate an agent, such as the plan administrator or trustee, to perform the service. [20]

These proposed provisions are intended to ensure that proxy material is received by beneficial owners who are employee benefit plan participants to the same extent as by other beneficial owners. [21] Because record holders and respondent banks often do not perform recordkeeping functions for employee benefit plans, they may not have access to the names and addresses of plan participants. Thus, these proposals would eliminate the necessity of requiring record holders and respondent banks to obtain that information and maintain duplicate records regarding plan participants.

The requirement that the registrant have access to the names and addresses of beneficial owners who are employee benefit plan participants, by some means other than the direct communications provisions of paragraph (b) of Rule 14a-13, is intended to ensure that registrants can obtain the information necessary to forward proxy material to such plan participants. [22] For example, registrants could obtain such information through payroll deductions or a list of plan participants provided by the plan administrator. Specific comment on the extent to which plans prohibit registrants' access to plan participants' names and addresses is requested.

By virtue of the access requirement, the exclusion generally would apply to participants in employee benefit plans only with respect to their holdings of securities issued by a registrant who is the plan sponsor or an affiliate of the plan sponsor. A registrant ordinarily would not have access to the names and addresses of beneficial owners who are participants in employee benefit plans that it does not sponsor. In such a case, a registrant with securities held pursuant to an employee benefit plan it does not sponsor would not be permitted to use the proposed exclusion, but instead would be required to comply with the proxy processing procedures under the shareholder communications rules. Banks and brokers correspondingly would be required to carry out their proxy processing obligations with respect to plan participant holdings of securities issued by registrants other than the plan sponsor. [23]

The second requirement for mandatory exclusion of plan participants from the proxy processing provisions recognizes that a registrant might be unable to fulfill its obligations under proposed paragraph (d) of Rule 14a-13 to furnish proxy material to plan participants if the plan provisions prohibited it from communicating directly with such participants. Accordingly, in such circumstances, distribution of proxy material may be accomplished in the most effective manner through the proxy processing provisions of the shareholder communications rules.

In this connection, the Commission is soliciting comment on the necessity of this requirement and is considering eliminating it. Comment is solicited on how frequently registrants are prohibited from communicating directly with plan participants and the reasons for such a prohibition. Commentators also are required to address whether the prerequisite—that the registrant not be prohibited from communicating directly with plan participants—should depend only upon the terms of the plan document or should refer to other

[16] 17 CFR 240.14a-13(a)(1).

[17] 17 CFR 240.14a-13(a)(2).

[18] If voting authority resides with the plan trustee, the trustee is the beneficial owner for purposes of the shareholder communications rules and, accordingly, the proposals would not apply. *See* Rule 14b-2(i), 17 CFR 240.14b-2(i).

[19] A new Note 3 to Rule 14a-13(a) would direct registrants' attention to their obligations under proposed paragraph (d) of Rule 14a-13. In addition, clarifying amendments are being proposed to Note 2 to Rule 14a-13(a).

[20] A registrant that chooses to carry out these obligations through an agent may be liable for the acts or omissions of its agent.

[21] To the extent appropriate, similar revisions are being proposed to Rule 14c-7.

[22] This requirement would be satisfied even if the plan has provisions prohibiting disclosure of plan participants' securities positions to registrants in certain limited circumstances. For example, some plansprovide that the plan sponsor will not have access to the securities positions of its employee beneficial owners during and subsequent to a tender offer. These provisions usually are enforced through the general fiduciary provisions of the Employee Retirement Income Security Act ("ERISA"), 29 U.S.C. 1104, and its prohibition against coercive interference with participants' exercise of their rights under the plan. 29 U.S.C. 1141.

[23] Non-plan sponsor registrants also would be required to comply with the direct communications procedures under the shareholder communications rules, *see* discussion *infra* at Section II. B.

prohibitions against such communications. Commentators are requested to address whether a registrant that satisfied its obligation under proposed paragraph (d) to cause proxy material to be furnished to exclude plan participants through an agent would be in non-compliance with an employee benefit plan's prohibition against communicating directly with plan participants.

As discussed in section II.C. below, proposed paragraph (e)(1) of Rule 14a-13 would require that registrants transmit notice of the fact that their employee benefit plans satisfy the criteria for exclusion from the proxy processing procedures to record holders and respondent banks.

B. Direct Communications Provisions

The proposal would amend paragraph (b)(3) of Rule 14a-13 to provide that a registrant's request for a list of beneficial owners shall not cover beneficial owners who are employee benefit plan participants or beneficiaries, with respect to securities of the registrant held in nominee name pursuant to such plan, where the registrant has access, by some means other than pursuant to paragraph (b) of Rule 14a-13, to the names and addresses of such plan participants.[24] This provision is intended to permit registrants to realize cost savings in connection with requesting beneficial owner lists while, at the same time, not requiring record holders and respondent banks that generally do not perform plan recordkeeping duties to develop and maintain such records. This proposal is similar to the approach previously proposed in Release No. 34-24274. That approach, however, was optional on the part of the registrant while the proposed exclusion published today is mandatory once the access prerequisite is satisfied.

As discussed in Section II.C. below, proposed paragraph (e)(2) of Rule 14a-13 would require that registrants transmit notice of the fact that their employee benefit plans satisfy the criterion for exclusion from the direct communications provisions to record holders and respondent banks.

C. Notice Requirements for Proxy Processing and Direct Communications Provisions

Proposed paragraphs (e)(1) and (e)(2) of Rule 14a-13 would require registrants to notify record holders and respondent banks of the plans that meet the prerequisites for exclusion from the proxy processing and direct communications provisions, respectively. Under both proposed provisions, the mandatory notice generally would be given to only one broker or bank—the entity that directly holds the registrant's securities in nominee name pursuant to an employee benefit plan. If the registrant failed to notify the appropriate broker or bank, it would be liable for any reasonable costs incurred by the broker or bank in performing its obligations under the shareholder communications rules with regard to such excluded plan participants.[25]

The registrant would be required to transmit the notice within 10 business days after the effective date of the proposed amendments or the date a plan is later established or amended so that it meets the specified prerequisites. On receiving a notice sent by the registrant under proposed paragraph (e)(1) of Rule 14a-13, a record holder or respondent bank would not respond to the registrant's Rule 14a-13 (a)(1) and (a)(2) search card inquiry with respect to participants in the specified plan or forward to them proxy material relating to the registrant.[26] On receiving a proposed Rule 14a-13 (e)(2) notice, a record holder or respondent bank would not include employee benefit plan participants in its responses to that registrant's requests for lists of beneficial owners.[27]

Comment is solicited on the likelihood that a plan excluded from the proxy processing and/or direct communications provisions of the shareholder communications rules would be amended so that the criteria for exclusion no longer would be satisfied. Commentators are requested to address whether the rules should require that registrants notify appropriate record holders and respondent banks under those circumstances, so that participants in such a plan can be included in the operation of the shareholder communications rules.

The notice provisions in these rule proposals are intended to ensure that banks and brokers are informed that particular employee benefit plans are excluded from operation of either or both the proxy processing or direct communications provisions. As proposed, banks and brokers must continue to perform their obligations until the required notice is received and registrants will be liable for their reasonable costs. The Commission is, however, considering permitting banks and brokers to cease performing their obligations under the shareholder communications rules with respect to excluded plan participants prior to receiving notice of the exclusion from the registrant. Registrants would continue to be liable for reasonable costs incurred by record holders and respondent banks with respect to excluded plan participants prior to their receipt of the required notice.

Alternatively, the Commission is considering eliminating the notice requirement. The Commission seeks comment as to whether banks and brokers will know whether the prerequisites for exclusion of plan participants from the proxy processing and/or direct communications provisions are satisfied or can obtain that information from sources other than the registrant. If such information is readily available, are notice provisions necessary to facilitate operation of the exclusions?

Assuming a notice provision is included, the Commission requests commentators' views on whether the rule should specify that the notice must be in writing or whether oral notification, as proposed, is sufficient. Comments also are requested on whether the rules should specify any time period between receipt and effectiveness of the notice. As proposed, notice would be effective immediately upon receipt.[28] In addition, comment is requested on whether the specified time period for transmitting the notice to a record holder or respondent bank should be longer, such as 20 or 30 business days

[24] To the extent appropriate, similar revisions are being proposed to Rule 14c-7.

[25] *See* Rule 14a-13(a)(5), 17 CFR 240.14a-13(a)(5), and Rule 14a-13(b)(5), 17 CFR 240.14a-13(b)(5).

[26] *See* proposed paragraph (d)(1) to Rule 14b-1 and proposed paragraph (g)(1) to Rule 14b-2. The proposed exclusion from the proxy processing provisions would not, however, excuse a bank from executing an omnibus proxy under Rule 14b-2(b), 17 CFR 240.14b-2(b), in favor of respondent banks with respect to securities owned by excluded plan participants. Although proxy material would not be distributed to excluded plan participants under Commission shareholder communications procedures, the omnibus proxy procedure still would be required to ensure that legal voting authority reaches the specific respondent bank with which plan participants have deposited their securities. Alternatively, banks could comply with the terms of any Commission approved alternate procedure to the omnibus proxy under Rule 14b-2(d), 17 CFR 240.14b-2(d).

[27] *See* proposed paragraph (d)(2) to Rule 14b-1 and proposed paragraph (g)(2) to Rule 14b-2.

[28] In contrast, the notice provisions proposed in Release No. 34-24274 would require registrants to give notice to appropriate record holders and respondent banks of their intention to use alternative means to distribute proxy materials and/or to exclude employee benefit plan participants from their requests for beneficial owner lists, with the notice becoming effective 60 calendar days thereafter.

after effectiveness of the rules or establishing or amending a plan.

In this connection, if a bank received notice, pursuant to proposed paragraphs (e)(1) and (e)(2) of Rule 14a-13, that a particular employee benefit plan was excluded from operation of both the proxy processing and direct communications provisions of the shareholder communications rules, the bank would be free to delete plan participant information from its benefical owner records. Under current rules, however, a broker would not be permitted to delete such information from its records, because it is required to maintain this information as part of its recordkeeping obligations under Rule 17a-3(a)(9).[29] Comments are solicited on whether Rule 17a-3(a)(9) should be amended to permit brokers to delete such information. Data on the costs associated with brokers continuing to request beneficial owner information from plan participants and maintain this information also is requested.[30]

D. *Other Proposed Revisions*

Proposed amendments to paragraph (b) to Rule 14a-1 and paragraph (b) to Rule 14c-1 would substitute the term "primarily" for the term "solely" in the definition of employee benefit plan. These definitions, which apply only to the shareholder communication rules, currently include only plans established solely for employees, directors, trustees or officers.[31] The proposed revision would include plans that are primarily established for employees but also include other persons, such as consultants.

The Commission also is requesting comment on whether the proposed exclusions from the proxy processing and direct communications provisions should be expanded further to include dividend or interest reinvestment plans. Such plans often allow holders of securities to have their dividends or interest automatically reinvested by the dividend or interest paying agent in additional securities in lieu of cash distribution. Securities purchased under the plan generally are held in nominee name. One commentator has stated, however, that a common requirement for such plans is that a participant must hold at least one share of the registrant's stock in his own name. According to this commentator, this requirement assures that the name and address of the participant is known to the registrant, despite the fact that the participant's ownership of the registrant's securities is in nominee name. The Commission solicits comment on whether, in fact, this is a common feature of divident or interest reinvestment plans.

III. Request for Comments

Any interested persons wishing to submit written comments on the proposed revisions to the shareholder communications rules, including the proposals and alternatives contained in Release No. 34-24274 (March 27, 1987), as well as on the matters that might have an impact on the proposals and alternatives, are requested to do so.

The Commission also requests comment on whether the proposals and alternatives, if adopted, would have an adverse effect on competition that is neither necessary nor appropriate in furthering the purposes of the Securities Exchange Act of 1934 ("Exchange Act").[32] Comments on this inquiry will be considered by the Commission in complying with its responsibilities under section 23(a) of the Exchange Act.[33]

IV. Cost-Benefit Analysis

To evaluate fully the benefits and costs associated with the proposed amendments to Rules 14a-1, 14a-13, 14b-1, 14b-2, 14c-1 and 14c-7, the Commission requests commentators to provide views and data as to the costs and benefits associated with the proposed amendments. In this regard, the Commission notes that the proposals obligate the registrant to furnish proxy material to certain beneficial owners whose securities are held in nominee name pursuant to an employee benefit plan, but eliminate both the requirement that record holders and respondent banks distribute proxy material to such plan participants, and the need for record holders and respondent banks to obtain and maintain beneficial owner information regarding such plan participants. In addition, the proposals will permit further cost savings to registrants in obtaining beneficial owner lists, the charges for which are calculated on a per name basis.

Additional costs will be incurred in connection with these proposals when registrants transmit to record holders and respondent banks notification that employee benefit plans are excluded from coverage of the shareholder communications rules. This notice only would be required for employee benefit plans that satisfy the prerequisites for exclusion; no notice would be required for plans that do not satisfy the prerequisites. The proposals do not require any additional costs to be incurred by record holders or respondent banks.

V. Regulatory Flexibility Act

The proposed revisions to Exchange Act Rules 14a-1, 14a-13, 14b-1, 14b-2, 14c-1 and 14c-7 have been certified, pursuant to 5 U.S.C. 605(b), that, if promulgated, they will not have a significant economic impact on a substantial number of small entities.

VI. Statutory Basis and Text of Proposed Amendments

These amendments are being proposed pursuant to sections 12, 14, 17 and 23(a) of the Exchange Act.[34]

List of Subjects in 17 CFR Part 240

Reporting and recordkeeping requirements, Securities, Banks, Associations.

VII. Text of Proposed Amendments

In accordance with the foregoing Title 17, Chapter II of the Code of Federal Regulations is proposed to be amended as follows:

PART 240—GENERAL RULES AND REGULATIONS, SECURITIES EXCHANGE ACT OF 1934

1. The authority citation for Part 240 continues to read, in part, as follows: (Citations before * * * indicate general rulemaking authority).

Authority: Sec. 23, 48 Stat 901, as amended; 15 U.S.C. 78w * * * Sections 240.14a-1, 240.14a-13, 240.14b-1, 240.14b-2, 240.14c-1 and 240.14c-7 also issued under sections 12, 15 U.S.C. 78*l*, and 14, Pub L. 99-222, 99 Stat. 1737, 15 U.S.C. 78n.

2. By revising paragraph (b) to § 240.14a-1 to read as follows:

§ 240.14a-1 Definitions.

* * * * *

(b) *Employee benefit plan.* For purposes of §§ 240.14a-13, 240.14b-1 and 240.14b-2, the term "employee benefit plan" means any purchase, savings, option, bonus, appreciation, profit sharing, thrift, incentive, pension or similar plan primarily for employees, directors, trustees or officers.

* * * * *

3. By revising paragraph (a)(2), Note 2 to paragraph (a), paragraph (b)(3) and

[29] 17 CFR 240.17a-3(a)(9). Paragraph (ii) of Rule 17a-3(a)(9) requires brokers to keep records showing, for each cash and margin account, whether or not the beneficial owner objects to disclosure to registrants of his or her identity, address and securities position.

[30] This information also was requested in Release No. 34-24274. No comments on this issue were received.

[31] This definition is the same as that currently included in Rule 405, 17 CFR 230.405, under the Securities Act of 1933, 15 U.S.C. 77a, *et seq.*

[32] 15 U.S.C. 78a, *et seq.*

[33] 15 U.S.C. 78w(a).

[34] 15 U.S.C. 78*l*, 78n, 78q and 78w(a).

paragraph (d) and adding Note 3 to paragraph (a) and new paragraph (e) to § 240.14a-13 to read as follows:

§ 240.14a-13 Obligation of registrants in communicating with beneficial owners.

(a) * * *

(2) Upon receipt of a record holder's or respondent bank's response indicating, pursuant to § 240.14b-2(a)(1), the names and addresses of its respondent banks, within one business day after the date such response is received, make an inquiry of and give notification to each such respondent bank in the same manner required by paragraph (a)(1) of this section; *Provided, however,* the inquiry required by paragraphs (a)(1) and (a)(2) of this section shall not cover beneficial owners who are employee benefit plan participants or beneficiaries, with respect to securities of the registrant held in nominee name pursuant to such a plan, where the plan satisfies the criteria set forth in paragraphs (d)(1) and (d)(2) of this section;

* * * * *

Note 2. to paragraph(a)—The attention of registrants is called to the fact that each broker, dealer, bank, association and other entity that exercises fiduciary powers has an obligation pursuant to § 240.14b-1(b) and § 240.14b-2(b) (except as provided therein with respect to securities held in nominee name pursuant to an employee benefit plan) and, with respect to brokers and dealers, applicable self-regulatory organization requirements to obtain and forward, within the time periods prescribed therein, (a) proxies (or in lieu thereof requests for voting instructions) and proxy soliciting materials to beneficial owners on whose behalf it holds securities, and (b) annual reports to security holders to beneficial owners on whose behalf it holds securities, unless the registrant has notified the record holder or respondent bank that it has assumed responsibility to mail such material to beneficial owners whose names, addresses and securities positions are disclosed pursuant to § 240.14b-1(c) and § 240.14b-2(e) (2) and (3).

Note 3. to paragraph (a)—The attention of registrants is called to the fact that registrants have an obligation, pursuant to paragraph (d) of this section, to cause proxies (or in lieu thereof requests for voting instructions), proxy soliciting material and annual reports to security holders to be furnished, in a timely manner, to beneficial owners who are participants in or beneficiaries of an employee benefit plan, with respect to securities of the registrant held in nominee name pursuant to such plan, if the plan satisfies the criteria set forth in paragraphs (d)(1) and (d)(2) of this section.

(b) * * *

(3) Make such request to the following persons that hold the registrant's securities on behalf of beneficial owners: all brokers, dealers, banks, associations and other entities that exercise fiduciary powers; *Provided, however,* such request shall not cover beneficial owners who are employee benefit plan participants or beneficiaries, with respect to securities of the registrant held in nominee name pursuant to such plan, where the registrant has access to the names and addresses of such beneficial owners by some means other than pursuant to paragraph (b) of this section;

* * * * *

(d) If a registrant solicits proxies, consents or authorizations from record holders and respondent banks who hold securities on behalf of beneficial owners, the registrant shall cause proxies (or in lieu thereof requests for voting instructions), proxy soliciting material and annual reports to security holders to be furnished, in a timely manner, to beneficial owners who are employee benefit plan participants or beneficiaries, with respect to securities of the registrant held in nominee name pursuant to such plan, if:

(1) The registrant has access to the names and addresses of such beneficial owners by some means other than pursuant to paragraph (b) of this section; and

(2) The registrant is not prohibited by the terms of the employee benefit plan from communicating directly with such beneficial owners.

(e) If an employee benefit plan:

(1) Satisfies the criteria set forth in paragraphs (d)(1) and (d)(2) of this section; and/or

(2) Satisfies the criterion set forth in the proviso to paragraph (b)(3) of this section, no later than 10 business days after the later of the date this paragraph becomes effective or the date the plan is established or amended so as to satisfy the applicable criteria, a registrant shall transmit to the record holder(s) and/or the respondent bank(s) directly holding securities of the registrant in nominee name on behalf of participants in or beneficiaries of the plan, notice that the plan satisfies those criteria.

4. By redesignating current paragraph (d) as (e) and adding new paragraph (d) to § 240.14b-1 to read as follows:

§ 240.14b-1 Obligation of registered brokers and dealers in connection with the prompt forwarding of certain communications to beneficial owners.

* * * * *

(d)(1) not include in its response pursuant to paragraph (a) of this section or forward proxies (or in lieu thereof requests for voting instructions), proxy soliciting material or annual reports to security holders pursuant to paragraph (b) of this section to beneficial owners who are employee benefit plan participants or beneficiaries, with respect to securities of a registrant held in nominee name pursuant to such plan, if such broker or dealer has been notified by the registrant, pursuant to § 240.14a-13(e)(1), that such plan meets the criteria set forth in § 240.14a-13(d)(1) and (2); and/or

(2) Not include, pursuant to paragraph (c) of this section, data concerning beneficial owners who are employee benefit plan participants or beneficiaries, with respect to securities of a registrant held in nominee name pursuant to such plan, if such broker or dealer has received notice from the registrant, pursuant to § 240.14a-13(e)(2), that such plan meets the criterion set forth in the proviso to § 240.14a-13(b)(3).

* * * * *

5. By revising paragraphs (e)(2)(i) and (f)(1), redesignating paragraphs (g) through (i) as (h) through (j), adding new paragraph (g), revising newly redesignated paragraph (h), and removing current paragraph (j) of § 240.14b-2, to read as follows:

§ 240.14b-2 Obligation of banks, associations and other entities that exercise fiduciary powers in connection with the prompt forwarding of certain communications to beneficial owners.

* * * * *

(e) * * *

(2) * * *

(i) With respect to customer accounts opened on or before December 28, 1986, beneficial owners of the registrant's securities on whose behalf it holds securities who have consented affirmatively to disclosure of such information, subject to paragraph (i) of this section; and

* * * * *

(f) * * * (1) its obligations under paragraphs (b), (c), (e) and (i) of this section if a registrant does not provide assurance of reimbursement of its reasonable expenses, both direct and indirect, incurred in connection with performing the obligations imposed by paragraphs (b), (c), (e) and (i) of this section; or

(g) Shall not: (1) Include in its response pursuant to paragraph (a) of this section; forward proxies (or in lieu thereof requests for voting instructions), proxy soliciting material or annual reports to security holders pursuant to paragraph (c) of this section to; or comply with any alternative to paragraph (c) of this section approved by the Commission pursuant to paragraph (d) of this section with regard to beneficial owners who are employee benefit plan participants or beneficiaries, with respect to securities

of the registrant held in nominee name pursuant to such plan, if such record holder or respondent bank has received notice from the registrant, pursuant to § 240.14a-13(e)(1), that such plan meets the criteria set forth in § 240.14a-13(d)(1) and (2); and/or

(2) Include in its response pursuant to paragraphs (e) and (i) of this section data concerning beneficial owners who are employee benefit plan participants or beneficiaries, with respect to securities of a registrant held in nominee name pursuant to such plan, if such record holder or respondent bank has been notified by the registrant, pursuant to § 240.14a-13(e)(2), that such plan meets the criterion set forth in the proviso to § 240.14a-13(b)(3).

(h) For purposes of determining the fees which may be charged to registrants pursuant to § 240.14a-13(b)(5) and paragraph (f)(1) of this section for performing obligations under paragraphs (b), (c), (e) and (i) of this section, an amount no greater than that permitted to be charged by brokers or dealers for reimbursement of their reasonable expenses, both direct and indirect, incurred in connection with performing the obligations imposed by paragraphs (b) and (c) and § 240.14b-1 shall be deemed to be reasonable.

* * * * *

6. By revising paragraph (b) to § 240.14c-1 to read as follows:

§ 240.14c-1 Definitions.

* * * * *

(b) *Employee benefit plan.* For purposes of § 240.14c-7, the term "employee benefit plan" means any purchase, savings, option, bonus, appreciation, profit sharing, thrift, incentive, pension or similar plan primarily for employees, directors, trustees or officers.

* * * * *

7. By revising paragraph (a)(2), Note 3 to paragraph (a), the introductory text of paragraph (b), paragraph (b)(3) and paragraph (d) and adding Note 4 to paragraph (a) and new paragraph (e) to § 240.14c-7 to read as follows:

§ 240.14c-7 Providing copies of material for certain beneficial owners.

(a) * * *

(2) Upon receipt of a record holder's or respondent bank's response indicating, pursuant to § 240.14b-2(a)(1), the names and addresses of its respondent banks, within one business day after the date such response is received, make an inquiry of and give notification to each such respondent bank in the same manner required by paragraph (a)(1) of this section; *Provided, however,* the inquiry required by paragraphs (a)(1) and (a)(2) of this section shall not cover beneficial owners who are employee benefit plan participants or beneficiaries, with respect to securities of the registrant held in nominee name pursuant to such plan, where the plan satisfies the criteria set forth in paragraphs (d)(1) and (d)(2) of this section;

* * * * *

Note 3. to paragraph (a). — The attention of registrants is called to the fact that each broker and dealer has an obligation pursuant to applicable self-regulatory organization reguirements to obtain and forward, in a timely manner, (a) information statements to beneficial owners on whose behalf it holds securities, and (b) annual reports to security holders to beneficial owners on whose behalf it holds securities, unless the registrant has notified the broker or dealer that it has assumed responsibility to mail such material to beneficial owners whose names, addresses and securities positions are disclosed pursuant to § 240.14b-1(c) and § 240.14b-2(e)(2) and (3).

Note 4. to paragraph (a). — The attention of registrants is called to the fact that registrants have an obligation, pursuant to paragraph (d) of this section, to cause information statements and annual reports to security holders to be furnished, in accordance with § 240.14c-2, to beneficial owners who are participants in or beneficiaries of an employee benefit plan, with respect to securities of the registrant held in nominee name pursuant to such plan, if the plan satisfies the criteria set forth in paragraphs (d)(1) and (d)(2) of this section.

(b) * * *

(3) Make such request to the following persons that hold the registrant's securities on behalf of beneficial owners: all brokers, dealers, banks, associations and other entities that exercise fiduciary powers; *Provided, however,* such request shall not cover beneficial owners who are employee benefit plan participants or beneficiaries, with respect to securities of the registrant held in nominee name pursuant to such plan, where the registrant has access to the names and addresses of such beneficial owners by some means other than pursuant to paragraph (b) of this section;

* * * * *

(d) If a registrant furnishes information statements to record holders and respondent banks who hold securities on behalf of beneficial owners, the registrant shall cause information statements and annual reports to security holders to be furnished, in accordance with § 240.14c-2, to beneficial owners who are employee benefit plan participants or beneficiaries, with respect to securities of the registrant held in nominee name pursuant to such plan, if:

(1) The registrant has access to the names and addresses of such beneficial owners by some means other than pursuant to paragraph (b) of this section; and

(2) The registrant is not prohibited by the terms of the employee benefit plan from communicating directly with such beneficial owners.

(e) If an employee benefit plan: (1) Satisfies the criteria set forth in paragraphs (d)(1) and (d)(2) of this section; and/or

(2) Satisfies the criterion set forth in the proviso to paragraph (b)(3) of this section, no later than 10 business days after the later of the date this paragraph becomes effective or the date the plan is established or amended so as to satisfy the applicable criteria, a registrant shall transmit to the record holder(s) and/or the respondent bank(s) directly holding securities of the registrant in nominee name on behalf of participants in or beneficiaries of the plan, notice that the plan satisfies those criteria.

By the Commission.

Jonathan G. Katz,

Secretary.

June 18, 1987.

Securities and Exchange Commission Regulatory Flexibility Act Certification

I, Charles C. Cox, Senior Commissioner of the Securities and Exchange Commission, hereby certify, pursuant to 5 U.S.C. 605(b), that proposed revisions to Rules 14a-1, 14a-13, 14b-1, 14b-2, 14c-1 and 14c-7, if promulgated, will not have significate economic impact on a substantial number of small entities. The reasons for this certification are as follows: The proposed amendments to Rules 14a-1, 14a-13, 14b-1, 14b-2, 14c-1 and 14c-7 would require: (1) A registrant to exclude employee benefit plan participants from the operation of the proxy processing provisions of the shareholder communications rules with respect to a registrant's securities held in nominee name pursuant to the plan if the registrant has access to the names and addresses of such participants by some means other than the direct communications provisions and the registrant is not prohibited by the terms of the plan from communicating directly with such participants and (2) exclude plan participants from a registrant's request for a list of beneficial owners if the registrant has access to the names and addresses of the employee benefit plan participants by some means other than the direct communications provisions.

Under these proposals, registrants would be required to give notice to brokers and dealers ("brokers") and banks, associations and other entities exericsing fiduciary powers ("banks") of plans satisfying the prerequisites for either or both of the exclusions. Registrants also would have the obligation of furnishing proxy materials to those plan participants excluded from the proxy processing provisions.

The proposals are intended to avoid duplicative mailing of proxy materials to plan participants, to achieve the most efficient means of communicating with such plan participants and to realize cost savings for registrants in connection with proxy processing obligations and requesting beneficial ownership lists. While registrants would bear the costs of furnishing proxy material directly to certain plan participants and giving notification to brokers and banks, the proposals are expected to result in an overall decrease in costs for those registrants subject to the proposed exclusions. The decrease in costs, however, is not expected to be significant for a substantial number of small entities. Many small entities are exempt from registration pursuant to section 12(g) of the Securities Exchange Act of 1934 and not subject to the shareholder communications rules, although some of these exempt small entities do register their securities for various reasons and are subject to the shareholder communications rules. In addition, the cost savings are likely to be substantial only for large registrants with a large number of employees who participate in an employee benefit plan with the registrant's securities held in nominee name.

Brokers and banks that participate in the proxy processing and direct communications systems would incur little or no costs in complying with the proposals. Brokers and banks are reinbursed for their reasonable costs incurred in connection with performing their obligations under these rules. As brokers' or banks' costs decrease when a registrant is subject to the exclusion from either or both the proxy processing and direct communications rules, the costs that a registrant will be required to reimburse to brokers or banks will be lowered in a corresponding amount.

Dated: June 19, 1987.

Charles C. Cox,

Senior Commissioner.

[FR Doc. 87-14352 Filed 6-24-87; 8:45 am]

BILLING CODE 6010-01-M

ENVIRONMENTAL PROTECTION AGENCY

40 CFR Part 799

[OPTS-42096; FRL-3223-4]

2, 6-Di-Tert-Butylphenol; Proposed Test Rule

AGENCY: Environmental Protection Agency (EPA).

ACTION: Proposed rules.

SUMMARY: EPA is proposing that manufacturers and processors of 2,6-di-*tert*-butylphenol (DTBP, CAS No. 128-39-2) be required, under section 4 of the Toxic Substances Control Act (TSCA), to perform testing for chemical fate and environmental effects. This rule is proposed in response to the Interagency Testing Committee's (ITC's) designation of DTBP for priority consideration for chemical fate, health effects, and ecological effects testing.

DATES: Submit written comments on or before August 24, 1987. If persons request an opportunity to submit oral comment by August 10, 1987, EPA will hold a public meeting on this rule in Washington, DC. For further information on arranging to speak at the meeting see Unit VII of this preamble.

ADDRESS: Submit written comments, identified by the document control number (OPTS-42096), in triplicate to: TSCA Public Information Office (TS-793), Office of Pesticides and Toxic Substances, Environmental Protection Agency, Rm. NE-G004, 401 M St., SW., Washington, DC 20460.

A public version of the administrative record supporting this action (with any confidential business information deleted) is available for inspection at the above address from 8 a.m. to 4 p.m., Monday through Friday except legal holidays.

FOR FURTHER INFORMATION CONTACT: Edward A. Klein, Director, TSCA Assistance Office (TS-799), Office of Toxic Substances, Rm. E-543, 401 M St., SW., Washington, DC 20460, (202) 554-1404.

SUPPLEMENTARY INFORMATION: EPA is issuing a proposed test rule under section 4(a) of TSCA in response to the ITC's designation of DTBP for health effects, chemical fate and ecological effects testing consideration. The Agency is proposing testing for DTBP under section 4(a)(1)(A) of TSCA because of the potential for release of DTBP into ambient waters and because of DTBP's estimated acute toxicity to aquatic and benthic organisms. EPA has concluded that existing data are inadequate to assess the risks to the environment posed by exposure to DTBP and that testing of DTBP is necessary to develop such date.

I. Introduction

A. ITC Recommendation

TSCA (Pub. L. 94-469, 90 Stat. 2003 *et seq.*; 15 U.S.C. 2601 *et seq.*) established the ITC under section 4(e) to recommend to EPA a list of chemicals to be considered for testing under section 4(a) of the Act.

The ITC recommended DTBP (CAS No. 128-39-2) with intent to designate for health effects, ecological effects and chemical fate testing in its 17th Report, published in the **Federal Register** of November 19, 1985 (50 FR 47603). The ITC designated DTBP for priority consideration in its 18th Report, published in the **Federal Register** of May 19, 1986 (51 FR 18369). The ITC recommended that DTBP be considered for health effects testing, including toxicokinetics and chronic toxicity; chemical fate testing, including persistence in aerobic and anaerobic sediments; and ecological effects testing, including acute toxicity and bioconcentration in benthic organisms.

The ITC's rationale for health effects testing was based on concern for the potential for human exposure, pronounced effects on the prothrombin index, and DTBOP's irritant action.

The ITC's rationale for chemical fate testing was based on: (1) DTBP's identification in surface waters, wastewater, and sediments; (2) DTBP's high aquatic release potential; and (3) DTBP's potential to partition to and persist in sediments.

The ITC's rationale for ecological effects testing was based on: (1) DTBP's estimated acute toxicity to fish at low concentrations (< mg/L); (2) the lack of acute and chronic toxicity data for aquatic and benthic species; and (3) the potential to bioconcentrate based on the estimated log k_{ow} value of 5.4.

B. Opportunity for Negotiating a Consent Order

EPA has issued an Interim Final Rule that amends EPA's procedural regulations in 40 CFR Part 790 for the development and implementation of testing requirements under section 4 of TSCA. The amendments established procedures for using enforceable consent agreements to require testing under section 4 of the Act. EPA intends to use such consent agreements where a consensus exists among the Agency, affected manufactures and/or processors, and interested members of the public about the need for and scope

of testing requirements. The consent agreement provides an option to the test rule development process, facilitating the rapid development of test data without the necessity of EPA using the lengthy rulemaking process.

Where EPA concludes that the Agency and the affected firms and interested parties cannot reach a consensus on the testing requirements or other provisions to be included in the consent agreement, the Agency will proceed with rulemaking under section 4(a) of TSCA. A description of the procedures governing consent agreements and test rules appears in detail in the **Federal Register** of June 30, 1986 (51 FR 23706).

The first step in determining the feasibility of developing a consent agreement for a specific chemical is the identification of interested parties who may wish to participate in negotiations with EPA. In the **Federal Register** of July 2, 1986 (51 FR 24222), EPA announced the decision that the Agency was considering developing a testing consent agreement for DTBP. This notice requested interested parties to identify themselves. Ethyl Corporation and Schenectady Chemicals, Inc. requested participation in negotiating a consent order; however, a final agreement was not obtained. Consequently, the Agency is proceeding with rulemaking under section 4(a) of TSCA.

C. Test Rule Development Under TSCA

Under section 4(a) of TSCA, EPA shall by rule require testing of a chemical substance or mixture to develop apropriate test data if the Agency finds that:

(A)(i) the manufacture, distribution in commerce, processing, use, or disposal of a chemical substance or mixture, or that any combination of such activities, may present an unreasonable risk of injury to health or the environment.

(ii) there are insufficient data and experience upon which the effects of such manufacture, distribution in commerce, processing, use, or disposal of such substance or mixture or of any combination of such activities on health or the environment can reasonably be determined or predicted, and

(iii) testing of such substance or mixture with respect to such effects is necessary to develop such data; or

(B)(i) a chemical substance or mixture is or will be produced in substantial quantities; and (I) it enters or may reasonably be anticipated to enter the environment in substantial quantities or (II) there is or may be significant or substantial human exposure to such substance or mixture.

(ii) there are insufficient data and experience upon which the effects of the manufacture, distribution in commerce, processing, use, or disposal of such substance or mixture or of any combination of such activities on health or the environment can reasonably be determined or predicted, and

(iii) testing of such substance or mixture with respect to such effects is necessary to develop such data.

EPA uses a weight-of-evidence approach in making a section 4(a)(1)(A)(i) finding; both exposure and toxicity information are considered in determining whether available data support a finding that the chemical may present an unreasonable risk. For the finding under section 4(a)(1)(B)(i), EPA considers only production, exposure and release information to determine whether there is or may be substantial production and significant or substantial human exposure or substantial release to the environment. For the findings under section 4(a)(1)(A)(ii) and (B)(ii), EPA examines toxicity and fate studies to determine whether existing information is adequate to reasonably determine or predict the effects of human exposure to, or environmental release of, the chemical. In making the finding under section 4(a)(1)(A)(iii) or (B)(iii) that testing is necessary, EPA considers whether ongoing testing will satisfy the informational needs for the chemical and whether testing which the Agency might require would be capable of developing the necessary information

EPA's process for determining when these findings apply is described in detail in EPA's first and second proposed test rules as published in the **Federal Register** of July 18, 1980 (45 FR 48524) and June 5, 1981 (46 FR 30300). The section 4(a)(1)(A) findings are discussed at 45 FR 48524 and 46 FR 30300 and the section 4(a)(1)(B) findings are discussed at 46 FR 30300.

In evaluating the ITC's testing recommendations for DTBP, EPA considered all available relevant information including the following: Information presented in the ITC's report recommending testing consideration and any public comments on the ITC's recommendations; production volume, use, exposure, and release information reported by manufacturers of DTBP under the TSCA section 8(a) Preliminary Assessment Information Rule (40 CFR Part 712); health and safety studies submitted under the TSCA section 8(d) Health and Safety Data Reporting Rule (40 CFR Part 716) concerning DTBP; and published and unpublished data available to the Agency. From its evaluation, as described in this proposed rule, EPA is proposing chemical fate and environmental effects testing requirements for DTBP under section 4(a)(1)(A). By this section, EPA is responding to the ITC's designation of DTBP for priority testing consideration.

II. Review of Available Data

A. Profile

DTBP is a crystalline solid that is soluble in many organic solvents; estimates of its solubility in water range from 0.4 to 2.5 mg/L. (Refs. 1, 2). DTBP has an estimated vapor pressure of <0.01 mm Hg at 20 °C, a melting point of 39 °C (Refs. 3, 4, 5), and an estimated log K_{ow} value of 5.43 (Ref. 6).

B. Production

DTBP is produced domestically by three corporations: Ethyl Corporation, Schenectady Chemicals, Inc., and PMC Specialties Group. The combined production capacity of DTBP is estimated to be 24 to 34 million pounds per year (Refs. 7, 8). Aceto Corporation is an importer of DTBP. The actual production and import volumes for 1985 have been submitted as confidential business information (CBI).

DTBP is manufactured by a batch or continuous alkylation process. In the reaction sequence, DTBP is manufactured by reacting either phenol or p-cresol with isobutene gas and a catalyst in a closed reactor at temperatures ranging from 105 to 115°C. The raw product is purified by washing, filtration to remove the catalyst, and distillation. The product is shipped in 55-gallon drum containers or trailers. At all three production sites in the U.S. the material is packaged in the molten state (Ref. 9).

C. Uses

Specific information on DTBP use was voluntarily supplied by the manufacturers as CBI (Ref. 10, CBI). According to the ITC and other non-CBI sources approximately 75 to 95 percent of DTBP is used as a synthetic intermediate for the production of higher molecular weight phenolic antioxidants (Refs. 3, 9). These higher molecular weight antioxidants are mixed into synthetic polymers and plastics such as polypropylene to prevent oxidative degradation during processing and use of the plastic. DTBP is also incorporated into fuels, oils, plastics, rubber, and other products as an oxidation inhibitor and stabilizer (Ref. 3).

D. Environmental Release

DTBP is expected to enter the environment mainly as a result of wastewater releases from sites where DTBP is made and used.

Releases to water due to the manufacture of DTBP are possible during the water washing and neutralization step, cleaning of the equipment, and the washing of the

containers such as drums and tank trailers. Releases to land occur due to disposal of filter solids and the heavy ends from the distillation column.

At the Schenectady production site, releases to water may be minimal. The equipment used for manufacture is dedicated for production of alkylated phenol; therefore, cleaning is rarely done. The tank trucks are handled by a common carrier, and cleaning of the tank trucks is not done on the Schenectady site. The residue is landfilled (Ref. 9).

At the Ethyl manufacturing site in Orangeburg, South Carolina, releases to water are due to the phase separation of the reaction product. The equipment used to manufacture DTBP is also used to manufacture alkylated phenol; therefore, equipment washing is seldom done. Some material is either landfilled or incinerated.

At the PMC manufacturing site in Santa Fe Springs, California, releases to water occur during washing of equipment and shipping containers. The submitter did not estimate the amount of material released to land but it is likely that some of the material is released via disposal of spent filters and distillation bottoms (Ref. 9).

Processors may release DTBP to water in the production of higher molecular weight antioxidants; however, release to water is not expected in other applications such as formulating additives for fuels or lubricants (Ref. 9).

The ITC cited studies by Jungclaus et al. (Ref. 11) and Lopez-Avila et al. (Ref. 12) that reported DTBP levels in sediments, receiving waters and effluents from a specialty chemical plant in Rhode Island. The manufacturers of DTBP provided release data under section 8(a) of TSCA (submitted as CBI). Predicted environmental concentrations (PECs) for these plant sites are confidential; however, given DTBP's predicted acute toxicity to environmental organisms (Unit II.H.1), the Agency concluded that these levels (Ref. 13, CBI) are sufficient to support a "may present an unreasonable risk" finding under TSCA section 4(a)(1)(A).

E. Chemical Fate

Because of its high log K_{ow}, DTBP is expected to partition readily to sediments; its reactivity and persistence in this medium are not well characterized. Volatilization of DTBP should be slow because of the low estimated vapor pressure. Some volatilization from water to air has been reported (Ref. 14) but no half-life was calculated. DTBP is expected to be rapidly oxidized in air (Ref. 15). The very few experimental data are insufficient to characterize the chemical fate of DTBP.

F. Human Exposure

1. *Occupational.* The National Occupational Hazard Survey conducted by the National Institute for Occupational Safety and Health during 1972–1974 estimated that 2,192 people in six industries were exposed to DTBP in the workplace in 1970 (Ref. 16). However, EPA estimates that the number of potentially exposed workers is now much lower and that 12 to 45 workers are involved in the manufacture of DTBP (Ref. 9). In addition to section 8(a) submissions, the manufacturers have provided further exposure information claimed as CBI. The Agency estimates that 36 to 60 workers are potentially exposed to DTBP a few days a year in the manufacture of high molecular weight antioxidants (Ref. 9). The number of workers exposed to DTBP as a fuel or lubricant additive is not known; however, exposures are expected to be low because of the low concentrations of DTBP in formulated products (actual concentrations are CBI) (Ref. 9).

In the manufacture of DTBP there is a potential for inhalation and dermal exposure. At all three manufacturing sites, the worker activities include sampling/analysis, changing of the filters, product loading into drums or trailers, and possible cleaning of the equipment. The highest exposures could occur during the sampling (during production process) and loading operations. For the processing of DTBP into high molecular weight antioxidants exposures may occur during the connection and disconnection of transfer lines and the sampling of shipping containers. Protective clothing (e.g. gloves, goggles, respirators) is reported to be typically used (Ref. 9). EPA concludes that occupational exposures to DTBP are low and intermittent and that fewer than 100 workers are probably involved.

2. *Consumer and general population.* Some DTBP is used at low levels in gasoline, fuel oils, and such products as plastics and rubber. The low volatility of DTBP, the nature of the products in which it is used and the low concentrations of DTBP employed indicate a low potential for significant or substantial human exposure from these sources. EPA estimated the consumer exposure to DTBP in gasoline if gasoline were spilled on the skin every time the consumer used a self-service pump. If the frequency of use is once every 5 days, the estimated exposure is 13.6 ug/kg/yr (Refs. 17, 18).

DTBP will adsorb strongly to soil particles and partition to the sediment, and thus it is not expected to persist in water sufficiently to exceed low steady-state levels in discharge areas. Using data submitted as CBI, EPA has estimated possible levels of DTBP in drinking water near Ethyl's Orangeburg, SC site, as well as levels which could occur in fish due to bioconcentration. These estimates are considered CBI. The amounts of DTBP that could be consumed from drinking water, if concentrations of 0.001 to 0.006 mg/L were present as reported by Jungclaus (Ref. 11), would be 0.01 to 0.06 mg/kg/yr (Ref. 17). No other sources of exposure for the general population were identified.

G. Health Effects

1. *Pharmacokinetics.* Only limited data are available on the absorption, distribution and excretion of DTBP. Freitag et al. (Ref. 14) reported on a survey of a large number of diverse compounds for biologic fate following oral administration to male Wistar rats. The DTBP used in this study was 98 percent pure and uniformly radiolabeled with ^{14}C in the ring. The animals in groups of three were administered the compound by gavage at a level of 25 ug/rat (147 ug/kg body weight) daily for the first 3 days of the study. Feces and urine were collected during the 7 days of the study, and at termination on the 8th day, selected tissue samples were taken for analysis of radioactivity distribution and retention.

During the course of the study, 72.4 percent of the label was excreted in the feces, while 10.8 percent was eliminated in the urine. Although elimination of radioactivity in the urine was indicative of absorption, the study design did not permit determination of the extent of absorption or whether the eliminated material was parent compound or metabolite. Tissue analysis on the 8th day indicated that a total of 2.9 percent of the radiolabel was retained by the entire carcass. The amount of material retained by the liver and lungs was 0.10 and <0.01 percent (the detection limit) of the administered dose, respectively, while the adipose tissue retained 0.03 percent of the administered dose/g of tissue. Approximately 15 percent of the administered radioactivity was not accounted for.

2. *Acute, subchronic and chronic toxicity.* Studies assessing the acute effects of DTBP in a variety of species using different routes of exposure have been submitted under section 8(d) and have been summarized (Ref. 19).

Only the study by Ethyl Corporation (Refs. 20, 21) used sufficiently high doses to allow calculation of an oral LD50. Their LD50 value of 9.18 g/kg is consistent with the studies by Ciba-Geigy (Ref. 22) and Shell Oil Co. (1986) where only sporadic deaths occured at doses up to 5 g/kg. Most of these reports provided no description of the signs of toxicity with the exception of the study by Ciba-Geigy (Ref. 23) where dyspnea, exophthalmos, tremors, ruffled fur and altered body posture were reported. Some of these signs were observed at each doses level, with the severity and length of time to recovery increasing in a dose-related manner. At the highest dose, 5 g/kg, there were no residual signs of toxicity by day 9.

Studies using other routes of administration [inhalation and dermal (Refs. 20, 21, 23)] failed to define a lethal dose. In the inhalation study, the exposure was too low for this purpose. Dermal LD50 values for rats were reported to be greater than 1 g/kg and greater than 32 g/kg. These studies as well as other acute data submitted indicate that DTBP is not highly toxic after acute exposure by either the oral or dermal routes.

DTBP has also been tested for its potential to cause skin and eye irritation. In experiments where pure DTBP was applied directly to intact and abraded skin, slight erythema and edema were observed for intact skin, with more pronounced effects for abraded skin (Refs. 23, 24). However, marked irritation was caused by a DTBP-containing material identified as TK 12 891. In this study, 0.5g of TK 12 891 as a 50 percent solution in polyethylene glycol 400:saline (70:30) was applied to the intact and abraded skin of rabbits. A high degree of irritation was reported with the occurrence of ischemic areas, erythema, and in one animal loss of the stratum corneum (Ref. 25).

TK 13 126, which contains 30 percent of DTBP, was tested by Ciba-Geigy (Ref. 26) for the potential to cause depigmentation of the skin in black guinea pigs. Groups of five male and five female guinea pigs received daily application (except weekends) of 0.1 mL of a 1, 3 or 10 percent solution of TK 13 126 over a period of 8 weeks. Under these test conditions, no effect on pigmentation was observed. In eye irritation tests by Ethyl Corp. (Ref. 27) and Shell Oil Co. (Ref. 23) DTBP was shown to be nonirritating. Ciba-Geigy (Ref. 28) reported that TK 12 891 was a minimal eye irritant.

DTBP failed to induce delayed contact hypersensitivity in guinea pigs (Ref. 29).

From these data DTBP appears to be a mild to moderate irritant. Certain formulations containing DTBP, or particular application methods, may cause a higher degree of irritation.

Several survey studies of alkylphenols have been conducted. DTBP was studied as well as other phenolic antioxidants, such as BHT, a commonly used food additive and analog for DTBP. In one study DTBP and other structurally related antioxidants were examined for their potential to induce pulmonary edema in male ddY mice (Ref. 30). A group of four animals received a single intraperitoneal injection of DTBP at 2.27 mmol/kg (468 mg/kg) and were assessed 4 days later for body weight, wet lung weight and dry lung weight changes. This treatment resulted in no DTBP-induced changes, although an 11.5 percent decrease in body weight and 105 and 50 percent increases in wet and dry lung weight were observed for the analog BHT at the same molar dose. The two other alkylphenols tested, 2-*tert*-butyl-4-methyl- and 2-*tert*-butyl-4,6-dimethylphenol, which both have a 4-methyl group, also produced lung edema, whereas DTBP and other alkylphenols lacking the 4-methyl group were inactive when tested.

In a short-term feeding study conducted by Takahashi and Hiraga (Ref. 31), groups of 5 to 10 male Sprague-Dawley rats were fed diets containing phenolic antioxidants or potential metabolites for 3 weeks. DTBP was included in the diet at a level of 5.44 mmol/100 g, which resulted in a daily consumption of 4.55 mmol/kg (937 mg/kg). On day 19, two of the 10 animals exposed to DTBP died. These animals, along with four that were killed at the end of the study, had extensive hemorrhaging. The tissues involved included epididymis, muscle, thymus, pleural cavity, cranial cavity and submaxillary lymph nodes, along with intragastric pools of blood. The prothrombin index was decreased to 19 percent of control. Five groups of 10 rats each were also fed for 3 weeks with the analog BHT at doses ranging from 2.62 to 4.48 mmol/kg/day. These levels produced the same toxic effect of decreased prothrombin index and deaths due to hemorrhage. The prothrombin index was decreased to 11 to 12 percent of the control value. The dose used for DTBP was equal on a molar basis to the BHT LD50 resulting from hemorrhage. Other compounds which caused hemorrhaging were 2,5-di-tert-butylhydroquinone and 2,4,5-tributylphenol. Butylated hydroxyanisole and the aldehyde, alcohol and acid derivatives of BHT were inactive.

Effects of DTBP on hepatic drug metabolizing enzymes have been studied in rats and mice by Gilbert et al. (Refs. 32, 33) and in mice and *in vitro* systems by Rahimtula et al. (Ref. 34). Effects on enzyme systems were reported; however, this may not be an indication of potential hazard. Phenolic antioxidants typically induce enzymes, including detoxification enzymes, which may play a prominent role in the protective effects attributed to them such as anticarcinogenic and antimutagenic activity (Ref. 35).

3. *Teratogenicity and reproductive effects.* No data were found on the teratogenicity or reproductive system toxicity of DTBP.

The ITC cited a study performed by Telford et al. (Ref. 36) on the effects of DTBP on fetal reabsorption in rats. On review of this study, it was apparent that the data extracted were for 2,2-methylenebis (4-ethyl-6-*tert*-butylphenol) and not DTBP; DTBP was not one of the compounds tested.

4. *Mutagenicity.* Dean et al. (Ref. 37) reported on the genotoxicity testing of 41 industrial chemicals performed by Shell Toxicology Laboratories between the years 1975 and 1981. DTBP was tested in 1978 for reverse mutation in *Salmonella typhimurium* strains TA1535, TA1537, TS1538, TA98 and TA100, and in *Escherichia coli* strains WP2 and WP2 UVRA, for mitotic gene conversion in *Saccharomyces cerevisiae* JDI, and for the ability to cause chromosomal damage in cultured rat liver cells. The microbial assays were performed both in the presence and absence of an exogenous metabolic activation system prepared from Aroclor 1254 pretreated rats. The DTBP tested, which was >98 percent pure, was negative in all test systems.

5. *Carcinogenicity.* No data were available on the carcinogenic potential of DTBP.

H. Environmental Effects

1. *Acute toxicity.* No data were found for DTBP. On the basis of published data on related compounds (Ref. 38) an LC50 to fish of 0.28 mg/L is estimated.

2. *Chronic toxicity.* No information was found on the chronic toxicity of DTBP to environmental organisms.

3. *Bioconcentration.* A bioconcentration factor (BCF) of 800 after 1 day was measured in an alga *(Chlorella)* (Ref. 2). The measured BCF in a fish (golden orfe), was 660 after 3 days (Ref. 14). The estimated BCF of DTBP in fish, based on a log P of 5.43 and using the method of Veith et al. (Ref.

39) is 8,200; the actual BCF may be lower if DTBP is metabolized, as suggested by the study in the golden orfe.

III. Findings

EPA is basing its proposed chemical fate and environmental effects testing for DTBP on the authority of section 4(a)(1)(A) of TSCA.

EPA finds that the release of DTBP from its manufacture and processing may present an unreasonable risk to the environment. The estimated log K_{ow} of 5.4 and the estimated LC50 of 0.28 mg/L for fish suggest that DTBP may be very toxic to aquatic and benthic organisims, particularly under chronic exposure conditions, at concentrations which may approach PECs. No environmental effects testing data on DTBP have been identified in the literature or made available to the Agency. Available data are insufficient to reasonably determine or predict the environmental effects and chemical fate of DTBP in sediments and water. The Agency has determined that testing is necessary to develop environmental effects and chemical fate data. EPA believes that the data resulting from these test requirements will be relevant to a determination that the manufacturing or processing of DTBP does or does not present an unreasonable risk of injury to the environment.

EPA is not proposing testing for health effects at this time. The ITC recommended toxicokinetics and chronic testing for DTBP, citing the main health concerns as DTBP's ability to cause hemorrhaging and skin irritation. Takahashi and Hirage reported that DTBP, as well as other phenolic antioxidants such as the food additive BHT, caused hemorrhaging when fed to rats at high levels for 3 weeks.

EPA has reviewed available data on health effects and potential human exposure. The few specific health effects identified in the literature occur only at relatively high exposure levels in animals. EPA's review of potential human exposure (see Unit II.F) to DTBP leads the Agency to conclude that the amounts released to the environment as a result of activities involving DTBP, and the amounts to which workers may be exposed during manufacturing and processing and to which other people may be exposed by contact with products containing DTBP, are extremely low, well below the animal exposure levels. From the available information, taken as a whole, EPA does not find at this time that DTBP may present an unreasonable risk of human health effects.

EPA is not proposing at this time the bioconcentration testing recommended by the ITC. Although DTBP may bioconcentrate in aquatic organisms if it is not metabolized readily, EPA has considered the potential for consumption of DTBP from this source, using in part CBI release data, and concluded that such consumption is not likely to be substantial or significant. In addition, DTBP's relatively low mammalian toxicity indicates that consumption of DTBP–contaminated organisms by fish-eating animals (including man) is not likely to result in any secondary toxicity to the consuming organisms. Therefore, EPA does not find that bioconcentration testing is necessary for DTBP.

IV. Proposed Rule

A. Proposed Testing and Test Standards

On the basis of the information presented in Unit II and the findings set forth in Unit III, EPA is proposing chemical fate and environmental effects testing for DTBP. The tests are to be conducted in accordance with EPA's TSCA Good Laboratory Practice standards in 40 CFR Part 792 and specific TSCA test guidelines as enumerated in 40 CFR Parts 796 and 797, or other published test methods as specified in this test rule for DTBP. Final revisions to the TSCA test guidelines were published in the **Federal Register** of May 20, 1987 (52 FR 19056); the Agency is proposing that these revisions be adopted in the test standards for DTBP.

The chemical fate tests to be conducted for DTBP are: (1) Water solubility, using the guideline at 40 CFR 796.1860; (2) aerobic aquatic biodegradability using the guideline at 40 CFR 796.3100; (3) anaerobic biodegradability using the guideline at 40 CFR 796.3140: (4) photolysis, using the guideline at 40 CFR 796.3765; and (5) sediment adsorption isotherm, using the guideline at 40 CFR 796.2750. The sediment-water partition coefficient K determined in the latter test shall be used to calculate K_{oc} values using the equation K_{oc} = K/(percent of organic carbon in each test sediment).

Aquatic toxicity tests to be conducted using measured concentrations of DTBP include: (1) Acute toxicity to freshwater alga, *Selenastrum capricornutum*, using the test guideline at 40 CFR 797.1050, and as modified under 799.1605 (d)(1)(i)(B); (2) acute toxicity to rainbow trout and fathead minnows in a flow-through system, using the guideline at 40 CFR 797.1400 as modified under 799.1605(d)(2)(i)(B); (3) acute toxicity to daphnids using the guideline at 40 CFR 797.1300; and (4) acute toxicity to gammarids, using the guideline at 40 CFR 797.1310. Using previously published equations (50 FR 39348; September 27, 1985) the Agency estimates that the time for DTBP to reach steady state concentrations in fish will be greater than the four days used for most fish acute toxicity tests. Therefore, the fish acute toxicity test must be extended to 14 days to allow for sufficient uptake of DTBP to produce any acute effects. All the acute toxicity data from these tests will be used to help determine whether chronic testing is necessary.

EPA is also proposing that a daphnid life-cycle test be conducted using measured concentrations of DTBP in a flow-through system, using the guideline at 40 CFR 797.1330, if either of the decision criteria in the following Fig. 1 is satisfied.

Fig. 1--PROPOSED DECISION LOGIC FOR DEVELOPING CHEMICAL FATE AND ENVIRONMENTAL EFFECTS DATA FOR DTBP

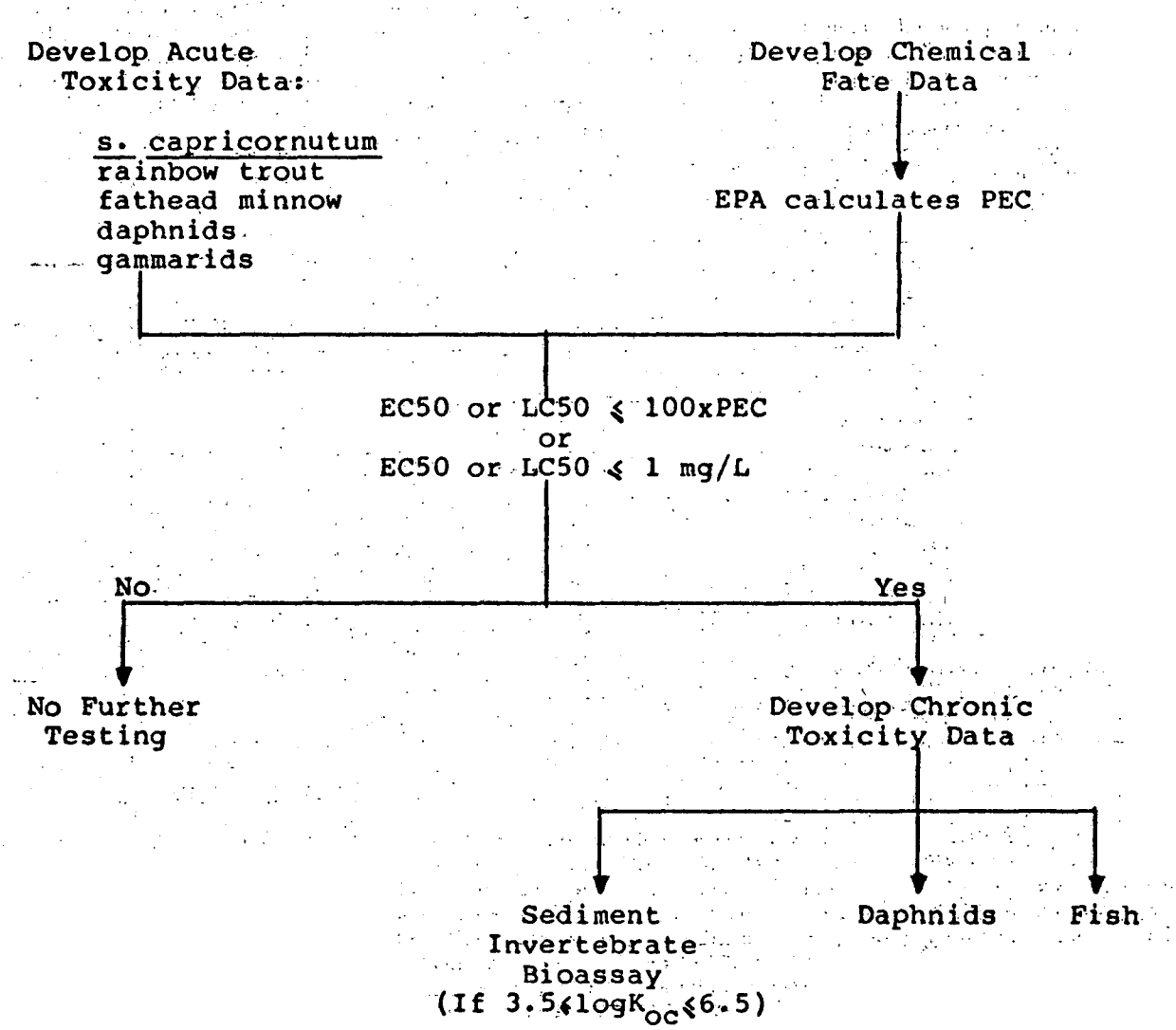

Testing for early-life stage toxicity to fish shall also be conducted using measured concentrations of DTBP in a flow-through system using the guideline at 40 CFR 797.1600, if either of the decision criteria in Fig. 1 is satisfied. The test species shall be the fish with the lower LC50 value.

A benthic sediment invertebrate bioassay shall be conducted using the method of Adams et al. (Ref. 40), if chronic fish and aquatic invertebrate testing must be performed (see Fig. 1) and if the value of log Koc as determined in the sediment adsorption isotherm test lies in the range 3.5–6.5. This 14-day toxicity test shall be conducted with the midge (*Chironomous tentans*) in a flow-through system using three different DTBP-spiked clean, freshwater sediments having low, medium, and high organic carbon content.

The data from any required chronic effects testing will assist EPA in conducting quantitative risk assessments for DTBP, and thus will be of critical importance in determining whether DTBP presents an unreasonable risk of environmental effects.

EPA will use the data from the required chemical fate tests, together with CBI release data for DTBP, to calculate a new PEC value for DTBP. If further testing is not otherwise triggered, the Agency will notify the test sponsor if the next set of tests must be performed because the PEC-based criterion has been met.

The water solubility test should be completed before any other tests are initiated, in order that the solubility information can be used in designing the remaining tests.

The Agency is proposing that the above referenced chemical fate and environmental effects test guidelines and modifications and other cited

methods be considered the test standards for the purposes of the testing proposed above for DTBP. The TSCA test guidelines for chemical fate and aquatic toxicity testing specify generally accepted minimal conditions for determining chemical fate and aquatic toxicities for substances such as DTBP to which aquatic life is expected to be exposed. Conducting the required studies in accordance with these TSCA guidelines will ensure that the test results are reliable and adequate.

B. Test Substance

EPA is proposing that DTBP of at least 98 percent purity be used as the test substance; DTBP of this purity is commercially available. EPA has specified a relatively pure substance for testing because the Agency is interested in evaluating the effects attributable to DTBP itself.

C. Persons Required To Test

Section 4(b)(3)(B) specifies that the activities for which the EPA makes section 4(a) findings (manufacture, processing, distribution, use and/or disposal) determine who bears the responsibility for testing. Manufacturers are required to test if the findings are based on manufacturing ("manufacture" is defined in section 3(7) of TSCA to include "import"). Processors are required to test if the findings are based on processing. Both manufacturers and processors are required to test if the findings are based on distribution, use, or disposal.

Because EPA has found that there are insufficient data and experience to reasonably determine or predict the effects of the manufacture and processing of DTBP on the environment, EPA is proposing that persons who manufacture and/or process, or who intend to manufacture and/or process, DTBP other than as an impurity at any time from the effective date of the final test rule to the end of the reimbursement period be subject to the testing requirements contained in this proposed rule. The end of the reimbursement period will be 5 years after the last final report is submitted or an amount of time after the submission of the last final report required under the test rule equal to that which was required to develop data, if more than 5 years.

Because TSCA contains provisions to avoid duplicative testing, not every person subject to this rule must individually conduct testing. Section 4(b)(3)(A) of TSCA provides that EPA may permit two or more manufacturers or processors who are subject to the rule to designate one such person or a qualified third person to conduct the tests and submit data on their behalf. Section 4(c) provides that any person required to test may apply to EPA for an exemption from the requirement. EPA promulgated procedures for applying for TSCA section 4(c) exemptions in 40 CFR Part 790.

Manufacturers (including importers) subject to this rule are required to submit either a letter of intent to perform testing or an exemption application within 30 days after the effective date of the final test rule. The required procedures for submitting such letters and applications are described in 40 CFR Part 790.

Processors subject to this rule, unless they are also manufacturers, will not be required to submit letters of intent or exemption applications, or to conduct testing unless manufacturers fail to submit notices of intent to test or later fail to sponsor the required tests. The Agency expects that the manufacturers will pass an appropriate portion of the costs of testing on to processors through the pricing of their products or reimbursement mechanisms. If manufacturers perform all the required tests, processors will be granted exemptions automatically. If manufacturers fail to submit notices of intent to test or fail to sponsor all the required tests, the Agency will publish a separate notice in the **Federal Register** to notify processors to respond; this procedure is described in 40 CFR Part 790.

EPA is not proposing to require the submission of equivalence data as a condition for exemption from the proposed testing for DTBP. As noted in Unit IV.B, EPA is interested in evaluating the effects attributable to DTBP itself and has specified a relatively pure substance for testing.

Manufacturers and processors subject to this test rule must comply with the test rule development and exemption procedures in 40 CFR Part 790 for single-phase rulemaking.

D. Reporting Requirements

EPA is proposing that all data developed under this rule be reported in accordance with its TSCA Good Laboratory Practice (GLP) standards which appear in 40 CFR Part 792.

In accordance with 40 CFR Part 790 under single-phase rulemaking procedures, test sponsors are required to submit individual study plans at least 45 days prior to the initiation of each study.

EPA is required by TSCA section 4(b)(1)(C) to specify the time period during which persons subject to a test rule must submit test data. The Agency is proposing specific reporting requirements for each of the proposed test standards as follows:

1. The chemical fate tests and acute toxicity tests in fresh water algae, fish, and aquatic invertebrates shall be completed and the final reports submitted to EPA within 12 months of the effective date of the final test rule. Semi-annual progress reports to EPA are required 6 months from the effective date of the rule.

2. The early life-stage toxicity test in fish, the life-cycle test in aquatic invertebrates, and the sediment invertebrate bioassay, if required, shall be completed and the final reports submitted to EPA within 12 months of the date of notification by EPA that these tests are required. Semiannual progress reports to EPA are required.

TSCA section 14(b) governs Agency disclosure of all test data submitted pursuant to section 4 of TSCA. Upon receipt of data required by the final rule, the Agency will publish a notice of receipt in the **Federal Register** as required by section 4(d).

Persons who export a chemical substance or mixture which is subject to a section 4 test rule are subject to the export reporting requirements of section 12(b) of TSCA. Final regulations interpreting the requirements of section 12(b) are in 40 CFR Part 707. In brief, as of the effective date of the final test rule, an exporter of DTBP must report to EPA the first annual export or intended export of DTBP to any one country. EPA will notify the foreign country concerning the test rule for the chemical.

EPA is continuing to review issues relating to the application of section 12(b) requirements to exporters of section 4 chemicals and may propose to revise 40 CFR Part 707 in a separate rulemaking.

E. Enforcement Provisions

The Agency considers failure to comply with any aspect of a section 4 rule to be a violation of section 15 of TSCA. Section 15(1) of TSCA makes it unlawful for any person to fail or refuse to comply with any rule or order issued under section 4. Section 15(3) of TSCA makes it unlawful for any person to fail or refuse to: (1) Establish or maintain records, (2) submit reports, notices, or other information, or (3) permit access to or copying of records required by TSCA or any regulation or rule issued under TSCA.

Additionally, TSCA section 15(4) makes it unlawful for any person to fail or refuse to permit entry or inspection as required by section 11. Section 11 applies to any "establishment, facility, or other premises in which chemical

substances or mixtures are manufactured, processed, stored, or held before or after their distribution in commerce. . . ." The Agency considers a testing facility to be a place where the chemical is held or stored, and therefore, subject to inspection. Laboratory inspections and data audits will be conducted periodically in accordance with the authority and procedures outlined in TSCA section 11 by duly designated representatives of the EPA for purpose of determining compliance with any final rule for DTBP. These inspections may be conducted for purposes which include verification that testing has begun, that schedules are being met, and that reports accurately reflect the underlying raw data and interpretations and evaluations, and to determine compliance with TSCA GLP standards and the test standards established in the rule.

EPA's authority to inspect a testing facility also derives from section 4(b)(1) of the TSCA, which directs EPA to promulgate standards for the development of test data. These standards are defined in section 3(12)(B) of TSCA to include those requirements necessary to assure that data developed under testing rules are reliable and adequate, and to include such other requirements as are necessary to provide such assurance. The Agency maintains that laboratory inspections are necessary to provide this assurance.

Violators of TSCA are subject to criminal and civil liability. Persons who submit materially misleading or false information in connection with the requirement of any provision of the final rule may be subject to penalties which may be calculated as if they never submitted their data. Under the penalty provisions of section 16 of TSCA, any person who violates section 15 could be subject to a civil penalty of up to $25,000 for each violation with each day of operation in violation constituting a separate violation. This provision would be applicable primarily to manufacturers that fail to submit a letter of intent or an exemption request and that continue manufacturing after the deadlines for such submissions. This provision would also apply to processors that fail to submit a letter of intent or an exemption application and continue processing after the Agency has notified them of their obligation to submit such documents (see 40 CFR 790.28(b)). Intentional violations could lead to the imposition of criminal penalties of up to $25,000 for each day of violation and imprisonment for up to 1 year. In determining the amount of penalty, EPA will take into account the seriousness of the violation and the degree of culpability of the violator as well as all the other factors listed in section 16. Other remedies are available to EPA under section 17 of TSCA, such as seeking an injunction to restrain violations of TSCA section 4.

Individuals as well as corporations could be subject to enforcement actions. Sections 15 and 16 of TSCA apply to "any person" who violates various provisions of TSCA. EPA may, at its discretion, proceed against individuals as well as companies themselves. In particular, this includes individuals who report false information or who cause it to be reported. In addition, the submission of false, fictitious, or fraudulent statements is a violation under 18 U.S.C. 1001.

V. Issues for Comment

This proposed rule specifies TSCA test guidelines and an independent, published test method as the test standards for chemical fate and environmental effects. The Agency is soliciting comments as to whether the chemical fate and environmental effects test guidelines (and the independent method) are appropriate and applicable for the testing of DTBP. Also regarding the testing of DTBP, the Agency requests comments on:

1. The adequacy of the proposed testing to characterize the chemical fate and ecological effects of DTBP.
2. The reporting times for the identified chemical fate and ecological effects tests.
3. Whether there are any other testing approaches that should be considered.
4. EPA's proposed approach to developing chronic toxicity data. The Agency believes that for chemicals where there are not substantial differences between EC50 or LC50 values for algae, fish and aquatic invertebrates and where these EC50 or LC50 values are less than or equal to either 1 mg/L or 100 X PEC, then an aquatic invertebrate life cycle test and a fish early-life cycle test should be conducted. The Agency believes this is a cost-effective approach to obtaining Maximum Acceptable Toxic Concentration (MATC) data on sensitive life stages of aquatic invertebrates and fish and believes these are minimal data necessary to assess the environmental risk of TSCA-regulatable chemicals. The Agency solicits comments on this approach. Specifically, the Agency requests submission of data that would help define when differences between EC50 or LC50s of algae, fish and invertebrates are so large that chronic effects concern can be narrowed to only one class of organisms, i.e., eliminating the need to conduct chronic tests of fish or aquatic invertebrates if acute toxicity ratios exceed a specific value.
5. EPA's proposed approach to acute aquatic toxicity testing using a cluster of organisms. For TSCA chemicals released to fresh water the Agency belives that acute aquatic toxicity may be adequately characterized by testing in five organisms representing three phyla. The Agency believes that reliable acute toxicity data developed for the five organisms listed in Fig. 1 can provide an estimate of general species sensitivity because of the spectrum of biochemical, physiological and structural features displayed by these organisms. The Agency believes it is more cost effective to develop acute aquatic toxicity data on this cluster of species and to use these data as a surrogate for the range of sensitivity for most freshwater organisms than to test dozens of organisms; this cluster species concept has been described by Dr. Donald Mount of EPA's Environmental Research Laboratory, Duluth MN (Ref. 41). Reliable acute toxicity data are data developed by accepted methods that include measuring test substance concentrations before, during and after testing and using static-renewal or flow-through test systems (for fish and aquatic invertebrates) for chemicals that may volatilize, hydrolyze, photolyze, or biodegrade. If reliable data are available on other freshwater fish, these data may be substituted for data on fathead minnows. If reliable data are available on other freshwater invertebrates, these data may be substituted for data on gammarids.

VI. Economic Analysis of Proposed Rule

To evaluate the potential economic impact of test rules, EPA has adopted a two-stage approach. All candidates for test rules go through a Level I analysis. This consists of evaluating each chemical or chemical group on four principal market characteristics: (1) Demand sensitivity, (2) cost characteristics, (3) industry structure, and (4) market expectations. The results of the Level I analysis, along with the consideration of the costs of the required tests, indicate whether the possibility of a significant adverse economic impact exists. Where the indication is negative, no further economic analysis is done for the chemical substance or group. However, for those chemical substances or groups where the Level I analysis indicates a potential for significant economic impact, a more comprehensive and detailed analysis is conducted. This Level II analysis attempts to predict

more precisely the magnitude of the expected impact.

Total testing costs for the proposed rule for DTBP are estimated to range from $66,000 to $107,000. This estimate includes the costs for the required minimum series of tests as well as any conditional ones. The annualized test costs (using a cost of capital of 7 percent over a period of 15 years) range from $7,200 to $11,800. Based on an estimated production volume of 34 million pounds a year, the unit test cost is approximately 0.03 cents per pound. In relation to the current price of approximately $1.00 per pound (98 percent purity) of DTBP, these costs are equivalent to 0.03 percent of price.

Based on these costs and market characteristics of DTBP, the economic analysis indicates that the potential for significant adverse economic impact as a result of this test rule is low. This conclusion is based on the following observations: (1) The annualized unit cost of the testing required in this rule is very low; (2) there is a low likelihood of substitution of alternative products owing to test costs; and (3) the market expectations for DTBP are optimistic.

Refer to the economic analysis which is contained in the public record for this rulemaking for a complete discussion of test cost estimation and potential for economic impact resulting from these costs.

VII. Public Meetings

If persons indicate to EPA that they wish to present oral comments on this proposed rule to EPA officials who are directly responsible for developing the rule and supporting analyses, EPA will hold a public meeting subsequent to the close of the public comment period in Washington, DC. Persons who wish to attend or to present comments at the meeting should call the TSCA Assistance Office (TAO): (202) 554-1404, by August 10, 1987. A meeting will not be held if members of the public do not indicate that they wish to make oral presentation. While the meeting will be open to the public, active participation will be limited to those persons who arranged to present comments and to designated EPA participants. Attendees should call the TAO before making travel plans to verify whether a meeting will be held.

Should a meeting be held, the Agency will transcribe the meeting and include the written transcript in the public record. Participants are invited, but not required, to submit copies of their statements prior to or on the day of the meeting. All such written materials will become part of EPA's record for this rulemaking.

VIII. Availability of Test Facilities and Personnel

Section 4(b)(1) of TSCA requires EPA to consider "the reasonably foreseeable availability of the facilities and personnel needed to perform the testing required under the rule." Therefore, EPA conducted a study to assess the availability of test facilities and personnel to handle the additional demand for testing services created by section 4 test rules. Copies of the study, Chemical Testing Industry: Profile of Toxicological Testing, can be obtained through the NTIS (PB 82-140773). On the basis of this study, the Agency believes that there will be available test facilities and personnel to perform the testing in this proposed rule.

IX. Rulemaking Record

EPA has established a record for this rulemaking (docket number OPTS-42096). This record contains the basic information considered by the Agency in developing this proposal and appropriate **Federal Register** notices.

This record includes the following information:

A. Supporting Documentation

(1) **Federal Register** notices pertaining to this rule consisting of:

(a) Notices containing the ITC's intent to designate DTBP to the Priority List (50 FR 47603; Nov. 19, 1985), and designation (51 FR 18369, May 19, 1986).

(b) Rules requiring TSCA section 8(a) and 8(d) reporting on DTBP (50 FR 47538; Nov. 19, 1985).

(c) TSCA test guidelines cited as test standards for this rule.

(d) Notice containing revision of TSCA test guidelines cited as test standards for this rule.

(2) Support document consisting of economic impact evaluation for DTBP.

(3) Communications before proposal consisting of:

(a) Written public comments and letters.

(b) Contact reports of telephone conversations.

(c) Meeting summaries.

(4) Reports—published and unpublished factual materials.

B. References

(1) Verschueren, K. *Handbook of Environmental Data on Organic Chemicals.* New York Van Nostrand Reinhold Company, p. 222. (1977).

(2) Geyer, H., Viswanathan, R., Freitag, D., and Korte, F. "Relationship between water solubility of organic chemicals and their bioaccumulation by the alga *Chlorella.*" In: *Chemosphere* 10(11-12):1307-1319.

(3) ITC. Seventeenth Report of the Interagency Testing Committee to the Administrator; Receipt of Report and Request for Comments Regarding Priority List of Chemicals. **Federal Register**, Vol. 50. No. 223, p 47603-47612. (1985).

(4) Ethyl Corp. Baton Rouge, LA, 70820. Letter to Martin Greif, Executive Secretary, Interagency Testing Committee, Washington, DC with attached material safety data sheet. (Feb. 29, 1984).

(5) Kirk-Othmer. "Alkyl phenols." In: *Kirk-Othmer Encyclopedia of Chemical Technology,* Vol. 2, 3rd ed. Grayson, M., and Eckroth, D., eds. New York: Wiley. p. 72-86. (1978).

(6) Lyman, W.J., Rechl, W.F., and Rosenblatt, D.H., *Handbook of Chemical Property Estimation Methods.* New York: McGraw-Hill Book Co., Chapter 1. (1982).

(7) *Chemical Economics Handbook.* Menlo Park, CA.: SRI International, Section 300.5603I, 300.5603L. (1982).

(8) EPA. "Chemical Profile for 2,6-Di-*tert*-butylphenol." Bakst, J.S. Regulatory Impacts Branch, Economics and Technology Division. (1985).

(9) EPA. "Test rules exposure and release analysis 2,6-Di-*tert*-butylphenol (DTBP)." M. Chatman, Chemical Engineering Branch, Economic and Technology Division. (1986).

(10) Industry submission. DTBP manufacturers response to EPA's Focus Meeting questions. The following documents are CBI: DCN 408680008; 40868009; 4086800011; 408880013. (1986).

(11) Jungclaus, G.A., Lopez-Avila, V., and Hites, R.A. "Organic compounds in an industrial wastewater: A case study of their environmental impact." In: *Environmental Science and Technology* 12:88-96. (1978).

(12) Lopez-Avila, V., and Hites, R.A., "Oxidation of phenolic antioxidants in a river system." In: *Environmental Science and Technology* 15:1386-1368. (1981).

(13) EPA. "Exposure assessment of 2,6-di-tert-butylphenol (DTBP) based on 8(a) data." Thomas, M. Exposure Assessment Branch. CBI: DCN: 408600002. (1986).

(14) Freitag, D., et al. "Ecotoxicological profile analysis. VII. Screening chemicals for their environmental behavior by comparative evaluation." *Ecotoxicology and Environmental Safety* 6(1):60-81. (1982).

(15) Syracuse Research Corporation. Technical Support Document, 2,6-Di-*tert*-butylphenol. Document No. SRC TR-86-035, prepared for Test Rules Development Branch, EPA. (1986).

(16) NIOSH. National Occupational Hazard Survey (1972-1974) [data base]. Cincinnati, OH; Department of Health and Human Services, National Institute for Occupational Safety and Health. (1986).

(17) EPA. Information package for Division Directors meeting for DTBP: Memorandum dated (June 17, 1986).

(18) EPA. Test Rules Exposure and Environmental Fate Analysis, Alkylated Phenol Antioxidants. Thomas. M. Exposure Assessment Branch. (1985).

(19) Syracuse Research Corp. Technical Support Document, 8(d) Addendum, 2,6-Di-tert-butylphenol. Document No. SRC TR-86-035, prepared for Test Rules Development Branch, EPA. (1986).

(20) Ethyl Corp. TSCA sec. 8(d) submission 878216315. The immediate toxicity of 2,6-

diisopropylphenol and 2,6-di-tertiary butyl phenol, in relation to the regulations of the Interstate Commerce Commission for the transportation of chemicals. Washington, DC: Office of Toxic Substances, U.S. Environmental Protection Agency. (1986).

(21) Ethyl Corp. TSCA sec. 8(d) submission 878216313. The physiological response of experimental animals to the absorption of 2-ethylaniline, 2-isopropylphenol, 2-6-diisopropylphenol and 2-6-di-tertiary butyl phenol. Washington, DC: Office of Toxic Substances, U.S. Environmental Protection Agency. (1986).

(22) Ciba-Geigy. TSCA sec. 8(d) submission 878216279. Acute oral LD50 in the rat of TK 12 891, 1982. Washington, DC: Office of Toxic Substances, U.S. Environmental Protection Agency. (1986).

(23) Shell Oil Co. TSCA sec. 8(d) submission 878216299. Submission of lists and copies of health and safety studies, report No. 221, 1982. Washington, DC: Office of Toxic Substances, U.S. Environmental Protection Agency. (1986).

(24) Ethyl Corporation. TSCA sec. 8(d) submission 878216308. A report on the skin irritation potential of 2,6-di-tertiary butyl phenol (2,6-DTBP), 1976. Washington, DC: Office of Toxic Substances, U.S. Environmental Protection Agency. (1986).

(25) Ciba-Geigy. TSCA sec. 8(d) submission 878216280. Skin irritation in the rabbit after single application of TK 12 891, 1981. Washington, DC: Office of Toxic Substances, U.S. Environmental Protection Agency. (1986).

(26) Ciba-Geigy. TSCA sec. 8(d) submission 878216282. TK 13 126 skin depigmentation study in the guinea pig. 1983. Washington, DC: Office of Toxic Substances, U.S. Environmental Protection Agency. (1986).

(27) Ethyl Corp. TSCA sec. 8(d) submission 878216306. Acute eye irritation/corrosion test in rabbits, 1984. Washington, DC: Office of Toxic Substances, U.S. Environmental Protection Agency. (1986).

(28) Ciba-Geigy. TSCA sec. 8(d) submission 878216281. Eye irritation in the rabbit after single application of TK 12 891, 1981. Washington, DC: Office of Toxic Substances, U.S. Environmental Protection Agency. (1986).

(29) Ethyl Corp. TSCA sec. 8(d) submission 878216309. Delayed contact hypersensitivity study in guinea pig, 1984. Washington, DC: Office of Toxic Substances, U.S. Environmental Protection Agency. (1986).

(30) Mizutani T., Ishida, I., Yamamoto, K., and Tajima, K. "Pulmonary Toxicity of butylated hydroxytoluene and related alkylphenols: Structural requirements for toxic potency in mice." *Toxicology and Applied Pharmacology* 62(2):273–281. (1982).

(31) Takahashi, O. and Hiraga, K. "The relationship between hemorrhage induced by butylated hydroxytoluene and its antioxidant properties or structural characteristics." *Toxicology and Applied Pharmacology* 46: 811–814. (1978).

(32) Gilbert, D., Golberg, L., and Gangolli, S.D. "Induction of liver microsomal processing enzymes by substituted phenols." *Biochemical Journal* 103(1):11p–12p. (1967).

(33) Gilbert, D., Martin, A.D., Gangolli, S.D., Abraham, R., and Golberg, L. "Effect of substituted phenols on liver weights and liver enzymes in the rat: structure-activity relationships." *Food and Cosmetics Toxicology* 7(1):603–619. (1969).

(34) Rahimtula, A.D., Jernstrom, B., Dock, L., and Moldeus, P. "Effects of dietary and *in vitro* 2(3)-t-butyl-4-hydroxy-anisole and other phenols on hepatic enzyme activity in mice." *British Journal of Cancer* 45:935–944. (1982).

(35) Kahl, R., and Hilderbrandt, A.G. "Methodology for studying antioxidant activity and mechanisms of action of antioxidants." *Food and Chemical Toxicology*. Vol. 24 (10/11):1007–1014. (1986).

(36) Telford, I.R., Woodruff, C.S., and Linford, R.H. "Fetal resorption in the rat as influenced by certain antioxidants." *American Journal of Anatomy* 110:29–36. (1962).

(37) Dean, B.J., Brooks, T.M., Hodson-Walker, G., and Hutson, D.H. "Genetic toxicology testing of 41 industrial chemicals." *Mutation Research* 153(1–2):57–77. (1985).

(38) Saarikoski, J., and Viluksela, M. "Relation between physicochemical properties of phenols and their toxicity and accumulation in fish." *Ecotoxicology and Environmental Safety* 6:501–512. (1982).

(39) Veith, G.D., DeFoe, D.L., and Bergstedt, B.J., "Measuring and estimating the bioconcentration factor of chemicals in fish." *Journal of the Fish Research Board of Canada* 36:1040–1048. (1979).

(40) Adams, W.J., Kimerle, R.A., and Mosher, R.G. "Aquatic Safety assessment of Chemicals Sorbed to Sediments." Aquatic Toxicology and Hazard Assessment: Seventh Symposium, ASTM STP 854, American Society for Testing and Materials, Philadelphia, pp 429–453. (1985).

(41) LSI. Surrogate species workshop. EPA contract No. 68-01-6554. Life Systems, Inc. Cleveland, OH. (1982).

Confidential Business Information (CBI), while part of the record, is not available for public review. A public version of the record, from which CBI has been deleted, is available for inspection in the OPTS Reading Rm. G-004, NE Mall, 401 M St. SW., Washington, DC, from 8 a.m. to 4 p.m., Monday through Friday, except legal holidays. The Agency will supplement this record periodically with additional relevant information received.

X. Other Regulatory Requirements

A. Executive Order 12291

Under Executive Order 12291, EPA must judge whether a regulation is "Major" and therefore subject to the requirement of a Regulatory Impact Analysis. EPA has determined that this test rule is not major because it does not meet any of the criteria set forth in section 1(b) of the Order, i.e., it will not have any annual effect on the economy of at least $100 million, will not cause a major increase in prices, and will not have a significant adverse effect on competition or the ability of U.S. enterprise to compete with foreign enterprises.

This proposed regulation was submitted to the Office of Management and Budget (OMB) for review as required by Executive Order 12291. Any written comments from OMB to EPA, and any EPA response to those comments, are included in the rulemaking record.

B. Regulatory Flexibility Act

Under the Regulatory Flexibility Act (15 U.S.C. 601 *et seq.*, Pub. L. 96-354, September 19, 1980), EPA is certifying that this test rule, if promulgated, will not have a significant impact on a substantial number of small businesses because: (1) They are not likely to perform testing themselves or to participate in the organization of the testing effort, (2) they will experience only very minor cost in securing exemption from testing requirements, and (3) they are unlikely to be affected by reimbursement requirements.

C. Paperwork Reduction Act

The information collection requirements contained in this rule have been approved by the Office of Management and Budget (OMB) under the provisions of the Paperwork Reduction Act of 1980, 44 U.S.C. 3501 *et seq.*, and have been assigned OMB number 2070-0033. Comments on these requirements should be submitted to the Office of Information and Regulatory Affairs; OMB; 726 Jackson Place, NW., Washington, DC 20503 marked "Attention: Desk Officer for EPA." The final rule will respond to any OMB or public comments on the information collection requirements.

List of Subjects in 40 CFR Part 799

Testing, Environmental protection, Hazardous substances, Chemicals, Environmental effects, Recordkeeping and reporting requirements.

Dated: June 17, 1987.

J.A. Moore,

Assistant Administrator for Pesticides and Toxic Substances.

PART 799—[AMENDED]

Therefore, it is proposed that 40 CFR Chapter I be amended as follows:

1. In Part 799:

a. The authority citation of Part 799 continues to read as follows:

Authority: 15 U.S.C. 2603, 2611, 2625.

b. By adding § 799.1605 to read as follows:

§ 799.1605 2,6-Di-tert-butylphenol.

(a) *Identification of test substance.* (1) 2,6-Di-*tert*-butylphenol (DTBP, CAS No. 128-39-2) shall be tested in accordance with this section.

(2) DTBP of at least 98 percent purity shall be used as the test substance.

(b) *Persons required to submit study plans, conduct tests, and submit data.* All persons who manufacture (import) or process DTBP, other than as an impurity, after the effective date of the final rule to the end of the reimbursement period shall submit exemption applications, submit study plans, conduct tests, and submit data as specified in this section, Subpart A of this Part, and Parts 790 and 792 of this chapter for single-phase rulemaking.

(c) *Chemical fate*—(1) *Water solubility (Generator Column Method)*—(i) *Required testing.* Water solubility testing shall be conducted with DTBP in accordance with § 796.1860 of this chapter.

(ii) *Reporting requirements.* (A) The water solubility test shall be completed and the final report submitted to EPA within 12 months of the effective date of the final rule.

(B) A progress report shall be submitted to EPA 6 months after the effective date of the final rule.

(2) *Aerobic aquatic biodegradability*—(i) *Required testing.* Aerobic aquatic biodegradation testing shall be conducted with DTBP in accordance with § 796.3100 of this chapter.

(ii) *Reporting requirements.* (A) The aerobic aquatic biodegradation test shall be completed and the final report submitted to EPA within 12 months of the effective date of the final rule.

(B) A progress report shall be submitted to EPA 6 months after the effective date of the final rule.

(3) *Anaerobic biodegradability*—(i) *Required testing.* An anaerobic biodegradability test shall be conducted with DTBP in accordance with § 796.3140 of this chapter.

(ii) *Reporting requirements.* (A) The anaerobic biodegradability test shall be completed and the final report submitted to EPA within 12 months of the effective date of the final rule.

(B) A progress report shall be submitted to EPA 6 months after the effective date of the final rule.

(4) *Photolysis*—(i) *Required testing.* A photolysis test shall be conducted with DTBP in accordance with § 796.3765 of this chapter.

(ii) *Reporting requirements.* (A) The photolysis test shall be completed and the final report submitted to EPA within 12 months of the effective date of the final rule.

(B) A progress report shall be submitted to EPA 6 months after the effective date of the final rule.

(5) *Sediment adsorption isotherm*—(i)(A) *Required testing.* A sediment adsorption isotherm test shall be conducted with DTBP in accordance with the guideline specified in § 796.2750 of this chapter and the modification specified in paragraph (c)(4)(i)(B) of this section.

(B) *Modification.* The requirements under § 796.2750(c) of this chapter are modified to require calculation of a K_{oc} value for each test sediment using the equation $K_{oc}=K/$(percent of organic carbon in test sediment).

(ii) *Reporting requirements.* (A) The sediment adsorption isotherm test shall be completed and the final report submitted to EPA within 12 months of the effective date of the final rule.

(B) A progress report shall be submitted to EPA 6 months after the effective date of the final rule.

(d) *Ecological effects*—(1) *Algal acute toxicity*— (i) *Required testing.* (A) Algal acute toxicity testing shall be conducted with DTBP using *Selenastrum capricornutum* in accordance with § 797.1050 of this chapter and the modification specified in paragraph (d)(1)(i)(B) of this section.

(B) *Modification.* The requirements under § 797.1050 (c)(1)(ii) and (c)(6)(i)(B) of this chapter are modified to require that the algal cells at the end of 24, 48, and 72 hours also be enumerated and that the final separation of the algal cells from the test solution be done using an ultrafiltration (e.g. 0.45 micrometer pore size) technique.

(ii) *Reporting requirements.* (A) The algal acute toxicity test shall be completed and the final report submitted to EPA within 12 months of the effective date of the final rule.

(B) A progress report shall be submitted to EPA 6 months after the effective date of the final rule.

(2) *Fish acute toxicity*—(i) *Required testing.* (A) Fish acute toxicity testing shall be conducted with DTBP using *Salmo gairdneri* (rainbow trout) and *Pimephales promelas* (fathead minnow) in accordance with § 797.1400 of this chapter and the modification specified in paragraph (d)(2)(i)(B) of this section.

(B) *Modification.* The requirements under § 797.1400 (c)(4)(iv) and (c)(6)(iii)(A) of this chapter are modified to require that the test continue for 14 days and that mortality and concentrations of DTBP be measured at the end of 0, 4, 8, 12 and 14 days.

(ii) *Reporting requirements.* (A) The fish acute toxicity tests shall be completed and the final report submitted to EPA within 12 months of the effective date of the final rule.

(B) A progress report shall be submitted to EPA 6 months after the effective date of the final rule.

(3) *Daphnid acute toxicity*—(i) *Required testing.* Daphnid acute toxicity testing shall be conducted with DTBP using *Daphnia magna* or *D. pulex* in accordance with § 797.1300 of this chapter.

(ii) (A) The daphnid acute toxicity test shall be completed and the final report submitted to EPA within 12 months of the effective date of the final rule.

(B) A progress report shall be submitted to EPA 6 months after the effective date of the final rule.

(4) *Gammarus acute toxicity*—(i) *Required testing. Gammarus* acute toxicity testing shall be conducted with DTBP using *G lacustris, G. fasciatus,* or *G. pseudolimnaeus* in accordance with § 797.1310 of this chapter.

(ii) *Reporting requirements.* (A) The *Gammarus* acute toxicity test shall be completed and the final report submitted to EPA within 12 months of the effective date of the final rule.

(B) A progress report shall be submitted to EPA 6 months after the effective date of the final rule.

(5) *Daphnid chronic toxicity*—(i) *Required testing.* Daphnid chronic toxicity testing shall be conducted with DTBP using *Daphnia magna* or *D. pulex* in accordance with § 797.1330 of this chapter, if the algal EC50, the 14-day LC50 for either fish species, or the gammarid or daphnid 48-hour LC50 determined in accordance with paragraph (d) (1), (2), (3), and (4) of this section is equal to or less than 1 mg/l, or if the algal EC50 value or one or more of the fish or aquatic invertebrate LC50 values determined in accordance with paragraph (d) (1), (2), (3), and (4) of this section is less than or equal to 100 times the predicted environmental concentration (PEC). EPA will calculate the PEC from data submitted to EPA pursuant to paragraph (c) of this section and will notify the test sponsor if the PEC criterion is met.

(ii) *Reporting requirements.* (A) The daphnid chronic toxicity test, if required shall be completed and the final report submitted to EPA within 12 months of the date of notification by EPA that the test is required.

(B) A progress report shall be submitted to EPA 6 months after the date of notification by EPA that the test is required.

(6) *Fish early-life stage toxicity*—(i) *Required testing.* A fish early-life stage toxicity test shall be conducted with DTBP in accordance with § 797.1600 of this chapter, using the fish with the lower LC50 value [either the rainbow trout (*Salmo gairdneri*) or the fathead minnow (*Pimephales promelas*)], if the algal EC50, the 14-day LC50 for either

fish species, or the gammarid or daphnid LC50 determined in accordance with paragraph (d) (1), (2), (3), and (4) of this section is equal to or less than 1 mg/L, or the algal EC50 value or one or more of the fish or aquatic invertebrate LC50 values determined in accordance with paragraph (d) (1), (2), (3), and (4) of this section is less than or equal to 100×PEC. EPA will calculate the PEC from data submitted to the Agency pursuant to paragraph (c) of this section, and will notify the test sponsor if the PEC criterion is met.

(ii) *Reporting requirements.* (A) The fish early life stage toxicity test, if required, shall be completed and the final report submitted to EPA within 12 months of the date of notification by EPA that the test is required.

(B) A progress report shall be submitted to EPA 6 months after the date of notification by EPA that the test is required.

(7) *Benthic sediment invertebrate bioassay*—(i) *Required testing.* A benthic sediment invertebrate bioassay shall be conducted with the midge (*Chironomus tentans*) if chronic toxicity testing is required pursuant to paragraph (d)(5) of this section and if the log of the K_{oc} determined under paragraph (c)(5) of this section is greater than or equal to 3.5 and less than or equal to 6.5. DTBP-spiked clean freshwater sediments containing low, medium and high organic carbon content shall be used according to the test guideline specified in the American Society for Testing and Materials Special Technical Publication 854 (ASTM STP 854) entitled, "Aquatic Safety Assessment of Chemicals Sorbed to Sediments," by W.J. Adams, R.A. Kimerle, and R.G. Masher and published in *Aquatic Toxicology and Hazard Assessment: Seventh Symposium*, ASTM STP 854, pp. 429–453, R.D. Caldwell, R. Purdy, and R.C. Bahner, Eds., 1985, which is incorporated by reference. The ASTM STP 854 is available for inspection at the Office of the Federal Register, Room 8401, 1100 L St., NW., Washington, DC. This incorporation by reference was approved by the Director of the Federal Register. This material is incorporated as it exists on the date of approval and a notice of any change in this material will be published in the **Federal Register**. Copies of the incorporated material may be obtained from the Document Control Officer (TS–793), Office of Toxic Substances, EPA, NE–G004, 401 M St., SW., Washington, DC 20460, and from the American Society for Testing and Materials (ASTM), 1916 Race Street, Philadelphia, PA 19103.

(ii) *Reporting requirements.* (A) The benthic sediment invertebrate bioassay, if required, shall be completed and the final report submitted to EPA within 12 months of the date of notification by EPA that the test is required.

(B) A progress report shall be submitted to EPA 6 months after the date of notification by EPA that the test is required.

(e) *Effective date.* (44 days after publication of the final rule in the **Federal Register**).

[Information collection requirements have been approved by the Office of Management and Budget under Control Number 2070–0033.]

[FR Doc. 87–14467 Filed 6–24–87; 8:45 am]

BILLING CODE 6560–50–M

FEDERAL COMMUNICATIONS COMMISSION

47 CFR Part 73

[MM Docket No. 87–140; FCC 87–175]

Broadcast Services; Review of Technical and Operational Requirements for Part 73–C Noncommercial Educational FM Broadcast Stations

AGENCY: Federal Communications Commission.

ACTION: Proposed rule.

SUMMARY: This action proposed to permit noncommercial educational FM stations that are located within 199 miles (320 Km) of the U.S.-Mexican border (border area) to submit applications based upon non-overlapping signal contours of domestic stations. This proposed action is necessary to make processing of applications for the border area consistent with our treatment of non-commercial FM stations in the remainder of the country. This should also benefit applicants and petitioners in the border area by eliminating the necessity of requesting a waiver for allotments short-spaced to other domestic non-commercial FM stations.

DATES: Interested parties may file comments on or before August 3, 1987 and reply comments on or before August 18, 1987.

ADDRESS: Federal Communications Commission, Washington, DC 20554.

FOR FURTHER INFORMATION CONTACT: Hank Van Deursen, Mass Media Bureau, (202) 632–9660.

SUPPLEMENTARY INFORMATION: This is a summary of the Commission's Notice of Proposed Rulemaking adopted on May 4, 1987 and released on June 19, 1987. The full text of this action is available for inspection and copying during normal business hours in the Federal Communications Commission Dockets Branch (room 230), 1919 M St., NW., Washington, DC. The complete text of this decision may also be purchased from the Commission's copy contractor, International Transcriptional Service, (202) 857–3800, 2100 M St., NW., Suite 140, Washington, DC 20037.

Introduction

1. The Commission, on its own motion, proposes to permit noncommercial educational FM (NCE–FM) stations that are located within 199 miles (320 Km) of the U.S.-Mexican border (border area) to submit applications based upon non-overlapping signal contours of domestic stations. This proceeding would make processing NCE–FM applications for the border area consistent with our treatment of NCE–FM applications for stations in the remainder of the U.S. The affected rules are contained in Part 73, Subpart C. The minimum distance spacing between domestic NCE–FM stations and Mexican FM broadcast stations would continue to be required in accordance with an international agreement between the United States and Mexico (Mexican agreement).[1]

Background

2. Currently, applications for NCE–FM transmitter sites located farther than 199 miles from the U.S.-Mexican border are accepted based on the co-channel and adjacent channel signal contour requirements of § 73.509. For these proposed stations, predicted signal level contours are computed for co-channel and the first adjacent channels. These contours must not overlap the predicted coverage of any other station. However, § 73.509 specifically requires that border area station assignments be based upon the allocation table in § 73.504 rather than on the contour method. That table, separate from the Table of Allotments in § 73.202 used for commercial FM stations, lists NCE–FM channel allotments for affected communities in Arizona, California, New Mexico, and Texas. Both the NCE–FM allotment table in § 73.504 and the required distance separations between Mexican stations and domestic stations (§ 73.207, Table C) were added to the Rules by an *Order* adopted subsequent to the Mexican agreement.[2]

[1] "Agreement between the United States of America and the United Mexican States Concerning Frequency Modulation Broadcasting in the 88 to 108 MHz Band" signed in Washington, DC on November 9, 1972.

[2] *See, Order*, FCC–73–1030, 38 FR 28834, October 17, 1973, 43 FCC 2nd 293 (1973), (adopted October 3, 1973).

Discussion

3. When the treaty provisions of the Mexican agreement were incorporated into the Rules, the Commission decided to use a single method for NCE-FM interference protection and station assignment with respect to Mexican stations and with respect to domestic stations. This single method, based upon minimum distance separations, facilitated orderly FM coordination procedures with Mexico. Additionally, with the limited computer resources available in 1972, it was administratively convenient to process NCE-FM assignments using the table with respect to both Mexican and domestic stations.[3]

4. On the basis of our experience in using the allotment table for fifteen years, we tentatively conclude that it is no longer warranted. We have had no problems using the contour method of assignments for NCE-FM stations within 199 miles of the U.S.-Canadian border. Stations in that area maintain distance separations from Canadian stations and use the contour method with respect to other domestic NCE-FM stations. We now believe it is appropriate to incorporate similar procedures for stations in the Mexican border area.

5. Outside of the border area the contour method is used exclusively to determine where new NCE-FM transmitters may be located. For example, it has been possible to employ directional antenna facilities at sites (that a minimum distance rule would have precluded) to prevent the overlap of coverage contours. This permits an increase in the number of NCE-FM outlets to serve the public and the ability to tailor a facility to fit its particular circumstances.

6. Therefore, for the purposes of inter-station domestic spacings, we propose to apply a 1.0 millivolt per meter (mV/m) coverage contour value uniformly to all NCE-FM stations regardless of class.[4] Border area NCE-FM stations would still be required to maintain minimum distance separations from Mexican allotment and assignments (set forth in § 73.207, Table C). All NCE-FM stations would also continue to maintain minimum distance separations from commercial allotments and assignments on appropriate adjacent channels (*see*, § 73.207, Table A). Comments and suggestions are solicited on this proposal.

Regulatory Flexibility Initial Analysis

7. This action will have no significant impact on small entities.

Paperwork Reduction Act

8. The proposal contained herein has been analyzed with respect to the Paperwork Reduction Act of 1980 and found to contain new or modified form, information collection and/or recordkeeping, labeling, disclosure, or record retention requirements; however, the modified form of information is already required of all NCE-FM stations outside the border area. This will not increase or decrease the burden hours on the public.

Ex Parte Considerations

9. For purposes of this nonrestricted notice and comment rule making proceeding, members of the public are advised that *ex parte* contacts are permitted from the time the Commission adopts a Notice of Proposed Rule Making until the time a public notice is issued stating that a substantive disposition of the matter is to be considered at a forthcoming meeting. In general, an *ex parte* presentation is any written or oral communication (other than formal written comments/pleadings and formal oral arguments) between a person outside the Commission and a Commissioner or a member of the Commission's staff which addresses the merits of the proceeding. Any person who submits a written *ex parte* presentation must serve a copy of that presentation on the Commission's Secretary for inclusion in the public file. Any person who makes an oral presentation addressing matters not fully covered in any previously filed written comments must prepare a written summary of that presentation; on the day of oral presentation, that written summary must be served on the Commission's Secretary for inclusion in the public file, with a copy to the Commission official receiving the oral presentation. Each *ex parte* presentation described above must state on its face that the Secretary has been served, and must also state by docket number the proceeding to which it relates. See generally, § 1.1231 of the Commission's Rules, 47 CFR 1.1231.

10. Pursuant to applicable procedures set forth in § 1.415 and 1.419 of the Commission's Rules, interested parties may file comments on or before August 3, 1987 and reply comments on or before August 18, 1987. All relevant and timely comments will be considered by the Commission before final action is taken in this proceeding. To file formally in this proceeding, participants must file an original and five copies of all comments, reply comments, and supporting comments. If participants want each Commissioner to receive a personal copy of their comments, an original plus nine copies must be filed. Comments and reply comments should be sent to Office of the Secretary, Federal Communications Commission, Washington, DC 20554. Comments and reply comments will be available for public inspection during regular business hours in the Dockets Reference Room (Room 239) of the Federal Communications Commission, 1919 M Street, NW. 20554.

11. Further information on this proceeding may be obtained by contacting Hank VanDeursen, Mass Media Bureau, (202) 632-9660.

List of Subjects in 47 CFR Part 73

Radio broadcasting.

Federal Communications Commission.

William J. Tricarico,

Secretary.

PART 73—[AMENDED]

It is proposed to amend Title 47, Part 73 as follows:

1. The authority citation for Part 73 continues to read as follows:

Authority: 47 U.S.C. 154 and 303.

§ 73.501 [Amended]

2. It is proposed to amend § 73.501 *Channels available for assignment* by removing paragraph (c).

3. It is proposed to amend § 73.504 by revising the title, removing the table following paragraph (a), and revising paragraph (a) to read as follows:

§ 73.504 Channel assignments under the Mexican-United States FM Broadcast Agreement and under the Canada-United States FM Broadcasting Agreement.

(a) The "Agreement between the United States of America and the United Mexican States Concerning Frequency Modulation Broadcasting in the 88 to 108 MHz Band" as amended will govern allotments and assignments of FM broadcast stations in the area within 199 miles (320 Km) of the common border with regard to protection to Mexican stations. The "Canadian-U.S.A. FM Broadcasting Agreement of 1947" as amended will govern allotments and assignments of FM broadcast stations in the area within 199 miles (320 Km) of the

[3] This table is updated by rulemaking to track each allocation or assignment modification ratified by the U.S. and Mexico. However, this table is not required to be part of the Rules by international agreement.

[4] A coverage contour of 1.0 mV/m is applied to all NCE-FM stations outside the border area regardless of class. However, within the border area, separations distances are presently based on a different contour value for some classes of stations (i.e., 0.5 mV/m contour for class B stations).

common border with regard to protection to Canadian stations.

* * * * *

4. It is proposed to amend § 73.509 by revising paragraph (a) to read as follows:

§ 73.509 Prohibited overlap.

(a) An application for a new or modified NCE-FM station other than a Class D (secondary) station will not be accepted if the proposed operation would involve overlap of signal strength contours with any other station licensed by the Commission and operating in the reserved band (Channels 200-220, inclusive) as set forth below:

* * * * *

[FR Doc. 87-14450 Filed 6-24-87; 8:45 am]

BILLING CODE 6712-01-M

47 CFR Part 73

[MM Docket No. 86-236; RM-5187]

Radio Broadcasting Services; Kingston, TN

AGENCY: Federal Communications Commission.

ACTION: Proposed rule; dismissal of proposal.

SUMMARY: This document dismisses a petition filed by William J. Miller, proposing the allotment of Channel 241A to Kingston, Tennessee, as that community's first FM service, at the request of the petitioner. With this action, this proceeding is terminated.

ADDRESS: Federal Communications Commission, Washington, DC 20554.

FOR FURTHER INFORMATION CONTACT: Patricia Rawlings, (202) 634-6530.

SUPPLEMENTARY INFORMATION: This is a summary of the Commission's Report and Order, MM Docket No. 86-236, adopted May 13, 1987, and released June 17, 1987. The full text of this Commission decision is available for inspection and copying during normal business hours in the FCC Dockets Branch (Room 230), 1919 M Street NW., Washington, DC. The complete text of this decision may also be purchased from the Commission's copy contractors, International Transcription Service, (202) 857-3800, 2100 M Street NW., Suite 140, Washington, DC 20037.

List of Subjects in 47 CFR Part 73

Radio broadcasting.

Mark N. Lipp,

Chief, Allocations Branch, Mass Media Bureau.

[FR Doc. 87-14451 Filed 6-24-87; 8:45 am]

BILLING CODE 6712-01-M

Notices

Federal Register
Vol. 52, No. 122
Thursday, June 25, 1987

This section of the FEDERAL REGISTER contains documents other than rules or proposed rules that are applicable to the public. Notices of hearings and investigations, committee meetings, agency decisions and rulings, delegations of authority, filing of petitions and applications and agency statements of organization and functions are examples of documents appearing in this section.

DEPARTMENT OF AGRICULTURE

National Commission on Dairy Policy; Advisory Committee Meeting

Pursuant to provisions of section 10(a)(2) of the Federal Advisory Committee Act (Pub. L. 92–463), a notice is hereby given of the following committee meeting.

Name: **National Commission on Dairy Policy.**

Time and Place: Holiday Inn, 15500 E. 40th Ave., Denver, Colorado 80239.

Status: Open.

Matters To Be Considered: On July 13, beginning at 8:00 a.m., the Commission will meet to discuss Commission matters with the Executive Director, review outlines of possible chapters in the Commission's report, discuss background materials related to the dairy industry, and discuss future meetings of the Commission. On July 14, beginning at 9:00 a.m., the Commission will hold a public hearing to receive testimony on the dairy price support program, new dairy technologies, and the influence of the program and technologies on the family farm.

Written Statement May Be Filed Before or After The Meeting With: Contact person named below.

Contact Person For More Information: Mr. Jeffrey Lyon, Assistant Director, National Commission on Dairy Policy, 1401 New York, Avenue, NW., Suite 1100, Washington, DC 20005, (202) 638–6222.

Signed at Washington, DC, this 19th day of June 1987.

David R. Dyer,

Executive Director National Commission on Dairy Policy.

[FR Doc. 87–14431 Filed 6–24–87; 8:45 am]

BILLING CODE 3410–05–M

Forest Service

Environmental Impact Statement; Structural Strengthening and Raising of Gibraltar Dam, Los Padres National Forest, Santa Barbara County, CA; Cancellation

The City of Santa Barbara, owner of Gibraltar Dam, has withdrawn its proposal to increase the height of the dam because of the potential for adverse effect on habitat of the Least Bell's Vireo, and endangered species. Los Padres National Forest manages most of the lands which would have been flooded as a consequence of increased dam height.

The City of Santa Barbara will proceed to study the impacts of dam strengthening on lands owned by the City.

The Notice of Intent to Prepare an Environmental Impact Statement, published in the **Federal Register** on March 18, 1986, is hereby rescinded.

For further information contact: John Bridgwater, Resources Officer, Santa Barbara Ranger District, Los Padres National Forest, Star Route, Santa Barbara, CA 93105; (805) 967–3481 or (FTS) 8–960–7786.

Dated: June 18, 1987.

Arthur J. Carroll,

Forest Supervisor, Los Padres National Forest.

[FR Doc. 87–14470 Filed 6–24–87; 8:45 am]

BILLING CODE 3410–11–M

Soil Conservation Service

Environmental Impact Statement; Arroyo Grande Creek Critical Area Treatment RC&D Measure, California

AGENCY: Soil Conservation Service, USDA.

ACTION: Notice of a finding of no significant impact.

SUMMARY: Pursuant to section 102(2)(C) of the National Environmental Policy Act of 1969; the Council of Environmental Quality Guidelines (40 CFR Part 1500); and the Soil Conservation Service Guidelines (7 CFR Part 650); the Soil Conservation Service, U.S. Department of Agriculture, gives notice that an environmental impact statement is not being prepared for the Arroyo Grande Creek Critical Area Treatment RC&D Measure, San Luis Obispo County, California.

FOR FURTHER INFORMATION CONTACT: Mr. Eugene E. Andreuccetti, State Conservationist, Soil Conservation Service, 2121–C 2nd Street, Davis, California 95616–5475, telephone (916) 449–2848.

SUPPLEMENTARY INFORMATION: The environmental assessment of this Federal action indicates that the project will not cause significant local, regional, or national impacts on the environment. As a result of these findings, Mr. Eugene E. Andreuccetti, State Conservationist, has determined that the preparation and review of an environmental impact statement is not needed for this measure.

The measure concerns a plan for the installation of critical area treatment facilities. The planned works of improvement include installing a retaining wall, placing earth fill behind it and vegetating areas disturbed by construction.

The Notice of a Finding of No Significant Impact (FONSI) has been forwarded to the Environmental Protection Agency. An environmental assessment and finding of no significant impact has been prepared and sent to various Federal, State and local agencies and interested parties. The basic data developed during the environmental assessment are on file and may be reviewed by contacting Mr. Eugene E. Andreuccetti, State Conservationist, Soil Conservation Service, 2121–C 2nd Street, Davis, California 95616, telephone (916) 449–2848. A limited number of copies of the finding of no significant impact are available to fill single copy requests at the above address. Implementation of the proposal will not be initiated until 30 days after the date of this publication.

(This activity is listed in the Catalog of Federal Domestic Assistance under No. 10.901—Resource Conservation and Development—and is subject to the provisions of Executive Order 12372 which requires intergovernmental consultation with state and local officials)

Dated: June 16, 1987.

John A. George,

Assistant State Conservationist (Special Programs).

[FR Doc. 87–14471 Filed 6–24–87; 8:45 am]

BILLING CODE 3410–16–M

DEPARTMENT OF COMMERCE

Agency Form Under Review by the Office of Management and Budget (OMB)

DOC has submitted to OMB for clearance the following proposal for collection of information under the provisions of the Paperwork Reduction Act (44 U.S.C. Chapter 35).

Agency: National Oceanic and Atmospheric Administration
Title: Northeast Multispecies Fishery
Form Number: Agency—NOAA 88-153; OMB-N/A
Type of Request: New Collection
Burden: 21 respondents; 11 reporting/recordkeeping hours
Needs and Uses: The Exempted Fisheries program of the Northeast Multispecies Fishery Management Plan provides flexibility to fishermen by allowing them to continue traditional fishery practices for non-regulated species, as long as the practices are consistent with the conservation objectives of the Plan. Participants in the Exempted Fisheries program are required to maintain and submit data to the National Marine Fisheries Service on their performance during the exempted period. Information provides monitioring and regulatory compliance data to ensure conservation of managed species.
Affected Public: Businesses or other for-profit institutions; small businesses or organizations
Affected Public: Businesses or other for-profit institutions; small businesses or organizations
Frequency: On occasion, monthly, and recordkeeping
OMB Desk Officer: John Griffen, 395-7340

Copies of the above information collection proposal can be obtained by calling or writing DOC Clearance Officer, Edward Michals (202) 377-3271, Department of Commerce, Room 6622, 14th and Constitution Avenue, NW., Washington, DC 20230.

Written comments and recommendations for the proposed information collection should be sent to John Griffen, OMB Desk Officer, Room 3228, New Executive Office Building, Washington, DC 20503.

Dated: June 22, 1987.

Edward Michals,

Departmental Clearance Officer, Office of Management and Organization.

[FR Doc. 87-14456 Filed 6-24-87; 8:45 am]

BILLING CODE 3510-CW-M

International Trade Administration

[A-580-073]

Bicycle Tires and Tubes From Korea; Final Results of Antidumping Duty Administrative Review

AGENCY: International Trade Administration, Import Administration, Commerce.

ACTION: Notice of Final Results of Antidumping Duty Administrative Review.

SUMMARY: On April 22, 1987, the Department of Commerce published the preliminary results of its administrative review and tentative determination to revoke in part the antidumping finding on bicycle tires and tubes from Korea. The review covers one exporter of this merchandise to the United States and the periods April 1, 1982 through June 30, 1983 and April 1, 1985 through March 31, 1986.

We gave interested parties an opportunity to comment on the preliminary results and tentative determination to revoke in part. We received no comments. Based on our analysis, the final results of review are unchanged from those presented in the preliminary results.

EFFECTIVE DATE: June 25, 1987.

FOR FURTHER INFORMATION CONTACT: Joseph A. Fargo or Maureen Flannery, Office of Compliance, International Trade Administration, U.S. Department of Commerce, Washington, DC. 20230; telephone: (202) 377-5255.

SUPPLEMENTARY INFORMATION:

Background

On April 22, 1987, the Department of Commerce ("the Department") published in the **Federal Register** (52 FR 13262) the preliminary results of its administrative review and tentative determination to revoke in part the antidumping finding on bicycle tires and tubes from Korea (44 FR 22051, April 13, 1979). The Department has now completed that administrative review in accordance with section 751 of the Tariff Act of 1930 ("the Tariff Act").

Scope of the Review

Imports covered by the review are shipments of bicycle tires and tubes, currently classifiable under Items 772.4800 and 772.5700 of the Tariff Schedules of the United States Annotated.

The review covers one exporter of Korean bicycle tires and tubes to the United States and the periods April 1, 1982 through June 30, 1983 and April 1, 1985 through March 31, 1986.

Final Results of the Review

We gave interested parties the opportunity to comments on the preliminary results and tentative determination to revoke in part. We received no comments. The final results of our review are the same as those presented in the preliminary results of review, and we determine that no margins exist for Korea Inoue Kasei Co., Ltd. for the periods April 1, 1982 through June 30, 1983 and April 1, 1985 through March 31, 1986.

The Department will instruct the Customs Service not to assess antidumping duties on all appropriate entries. The Department will issue appraisement instructions directly to the Customs Service.

Further, as provided in section 751(a)(1)(B) of the Tariff Act, since there was no margin for Korea Inoue Kasei, the Department shall not require a cash deposit of estimated antidumping duties for that company. For any shipments from the remaining known manufacturers and/or exporters not covered by this review, the cash deposit will continue to be at the rates published in the final results of the last administrative review for each of those firms (49 FR 10694, March 22, 1984). For any shipment from a new exporter not covered by this or prior administrative reviews, whose first shipments of Korean bicycle tires and tubes occurred after March 31, 1986, and who is unrelated to any reviewed firm, no cash deposit shall be required. These deposit requirements are effective for all shipments of Korean bicycle tires and tubes entered, or withdrawn from warehouse, for consumption on or after the date of publication of this notice and shall remain in effect until publication of the final results of the next administrative review.

This administrative review and notice are in accordance with section 751(a)(1) of the Tariff Act (19 U.S.C. 1675(a)(1)), and 19 CFR 353.53a.

Dated: June 18, 1987.

Gilbert B. Kaplan,

Deputy Assistant Secretary for Import Administration.

[FR Doc. 87-14475 Filed 6-24-87; 8:45 am]

BILLING CODE 3510-DS-M

[A-570-503]

Certain Steel Wire Nails From the People's Republic of China; Intention To Review and Preliminary Results of Changed Circumstances Administrative Review and Tentative Determination To Revoke Antidumping Duty Order

AGENCY: International Trade Administration, Import Administration, Commerce.

ACTION: Notice of Intention to Review and Preliminary Results of Changed Circumstances Administrative Review and Tentative Determination to Revoke Antidumping Duty Order.

SUMMARY: Because of changed circumstances, we tentatively determine to revoke the antidumping duty order on certain steel wire nails from the People's Republic of China (PRC). The revocation will apply to all entries of steel wire nails from the PRC entered, or withdrawn from warehouse, for consumption on or after January 1, 1986. Interested parties are invited to comment on these preliminary results and tentative determination to revoke.

EFFECTIVE DATE: January 1, 1986.

FOR FURTHER INFORMATION CONTACT: Michael Rill or Maureen Flannery, Office of Compliance, International Trade Administration, U.S. Department of Commerce, Washington, DC 20230; telephone: (202) 377-5255.

SUPPLEMENTARY INFORMATION:

Background

On May 21, 1986, the Department of Commerce ("the Department") published in the **Federal Register** (51 FR 18640) an antidumping duty order on certain steel wire nails from the People's Republic of China.

In a letter dated April 9, 1987, Atlantic Steel Company, Atlas Steel & Wire Corporation, Dickson Weatherproof Nail Company, Florida Wire & Nail Company, Keystone Steel & Wire Company, Northwestern Steel & Wire Company, Virginia Wire & Fabric Company, and Wire Products Company, the firms remaining as petitioners, informed the Department that they are no longer interested in the order and stated their support of revocation of the order. Under section 751 of the Tariff Act of 1930 ("the Tariff Act"), the Department may revoke an antidumping duty order that is no longer of interest to domestic interested parties.

Scope of the Review

The United States has developed a system of tariff classification based on the international ha monized system of Customs nomenclature. Congress is considering legislation to convert the United States to this Harmonized System ("HS") by January 1, 1988. In view of this, we will be providing both the appropriate Tariff Schedule of the United States Annotated ("TSUSA") item numbers and the appropriate HS item numbers with our product descriptions on a test basis, pending Congressional approval. As with the TSUSA, the HS item numbers are provided for convenience and Customs purposes. The written description remains dispositive.

We are requesting petitioners to include the appropriate HS item number(s) as well as the TSUSA item number(s) in all new petitions filed with the Department. A reference copy of the proposed Harmonized System schedule is available for consultation at the Central Records Unit, Room B-099, U.S. Department of Commerce, 14th Street and Constitution Avenue, NW., Washington, DC 20230. Additionally, all Customs offices have reference copies, and petitioners may contact the Import Specialist at their local Customs office to consult the schedule.

The products covered by the review are certain steel wire nails from the PRC. These nails are: One-piece steel wire nails as currently provided for in the Tariff Schedules of the United States Annotated (TSUSA) under item numbers 646.25 and 646.26, and similar steel wire nails of one-piece construction, whether at, over or under 0.065 inch in diameter, as provided for in item number 646.3040 of the TSUSA; two-piece steel wire nails provided for in item number 646.32 of the TSUSA; and steel wire nails with lead heads provided for in item number 646.36 of the TSUSA. These products are currently classifiable under HS item numbers 7317.00.55, 7317.00.65 and 7317.00.75.

The review covers the period from January 1, 1986.

Preliminary Results of the Review and Tentative Determination

As a result of our review, we preliminarily determine that the petitioners' affirmative statement of no interest in continuation of the antidumping duty order on certain steel wire nails from the PRC provides a reasonable basis for revocation of the order. Furthermore, petitioners' affirmative statement of no interest constitutes "good cause," as required by section 751(b)(2) of the Tariff Act, to conduct this review at this time.

There, we tentatively determine to revoke the order on certain steel wire nails from the PRC effective January 1, 1986. We intend to instruct the Customs Service to proceed with liquidation of all unliquidated entries of this merchandise entered, or withdrawn from warehouse, for consumption on or after January 1, 1986 without regard to antidumping duties and to refund any estimated antidumping duties collected with respect to those entries. The current requirement for a cash deposit of estimated antidumping duties will continue until publication of the final results of this review.

Interested parties may submit written comments on these preliminary results and tentative determination to revoke within 30 days of the date of publication of this notice, and may request a hearing within ten days of the date of publication. Any hearing, if requested, will be held 45 days after the date of publication or the first workday thereafter. The Department will publish the final results of the review and its decision on revocation, including its analysis of any such comments or hearing.

This intention to review, administrative review, tentative determination to revoke, and notice are in accordance with sections 751 (b) and (c) of the Tariff Act (19 U.S.C. 1675 (b) and (c)) and 19 CFR 353.53 and 353.54.

Gilbert B. Kaplan,

Deputy Assistant Secretary for Import Administration.

[FR Doc. 87-14476 Filed 6-24-87; 8:45 am]

BILLING CODE 3510-DS-M

Request for Proposal Effective Fiscal Year 1988 for International Freight Forwarding Services to Exhibits Transportation Unit

AGENCY: International Trade Administration, DOT.

ACTION: Notice of request for proposal effective fiscal year 1988 for International freight forwarding services to exhibits transportation unit.

SUMMARY: This notice is a request for submission of a proposal to the Exhibits Transportation Unit, U.S. Department of Commerce, for sea and air freight forwarding services effective Fiscal Year 1988. The services require complete arrangements for handling cargos from the United States to Commerce-sponsored exhibitions overseas. Proposals are to be submitted on a no-cost basis to the Department of Commerce.

DATES: Effective date for freight forwarding services is October 1, 1987.

ADDRESSES: Exhibits Transportation Unit, Room H1848, Export Promotion Services, International Trade

Administration, U.S. Department of Commerce, 14th St. & Constitution Ave. NW., Washington, DC 20230.

FOR FURTHER INFORMATION CONTACT: Mr. Irvin W. Lloyd, Exhibits Transportation Unit, Room H1848, Export Promotion Services, International Trade Administration, U.S. Department of Commerce, 14th Street and Constitution Ave. NW., Washington, DC 20230, (202/377-0693).

SUPPLEMENTARY INFORMATION:

Introduction

The Exhibits Transportation Unit, Export Promotion Services, U.S. and Foreign Commercial Service, U.S. Department of Commerce, requires international freight forwarding and customs brokerage services, both sea and air, for its Trade Fairs and Exhibitions program overseas. Exhibits Transportation is seeking the most efficient means of transporting exhibit materials overseas commensurate with the most reasonable cost to the exhibitor, as well as rapid communications in keeping all interested parties fully informed as to the whereabouts of display materials from the origin shipping point to the overseas destination.

Exhibits Transportation requests a proposal to provide a complete freight forwarding service by sea and/or by air transportation throughout the world via major port cities on the East, Gulf, and West Coasts. Any company desiring to submit a proposal should contact the Exhibits Transportation Unit by telephone or telex. The specific information needed to prepare and submit a complete proposal will be sent to the inquirer by courier service.

Over a period of time cargo originates in virtually every State in the Union. This requires the forwarder to provide a complete service from the major ports of export in the United States. Experience has shown that the principal ports used to consolidate both sea and air freight are New York, Houston, Los Angeles and San Francisco.

Exhibits Transportation's responsibility to deliver cargo to U.S. Department of Commerce (USDOC) exhibitions is worldwide with regard to the origin point of freight. In practice the bulk of the shipments handled are those originating in the United States.

The number of exhibitors shipping display materials from the United States varies greatly from one exhibition to another. For a given exhibition, there can be as few as three or four shipments up to over one hundred shipments. The quantity of cargo shipped is equally diverse, both as to commodity and tonnage.

All expenses incurred in arranging for and handling shipments for exhibitors, unless otherwise specified by the Exhibits Transportation Unit, are for the account of the exhibitor. The Department of Commerce is not responsible for the failure of any exhibitor to satisfy any expenses incurred by the freight forwarder in the handling of their cargo. Any arrangement concluded between the freight forwarder and Exhibits Transportation will be on a no-cost basis to the Department of Commerce.

The Conditions of Participation for U.S. Commercial Exhibitions (Solo or International Trade Fair) require the Participant to pay all costs of shipment of exhibit and promotional items from point of origin to the Exhibition site, including inland freight and charges such as port handling, transfer, cartage, freight forwarding, customs brokerage, duty, if applicable, taxes and other fees. While the Exhibits Transportation Unit does not pay for these services, it is, nevertheless, offering a service which involves recommending the use of a freight forwarder to whom the exhibitor will pay these fees and other charges for services rendered.

The most important factors upon which a judgment will be made for the selection of a freight forwarder to serve Exhibits Transportation are capability and dependability in handling all facets of outbound shipments for the Department of Commerce and the individual exhibitor, the cost of providing such service, and the ability to handle any return shipments back to their origin point. Of these factors, capability and dependability are considered the most important, with cost also being given very serious consideration.

A proposal to Exhibits Transportation to provide freight forwarding services must be received not later than July 17, 1987.

A decision regarding the freight forwarder/customs broker companies whose services will be utilized is expected to be made by September 15, 1987, to become effective October 1, 1987. The number of freight forwarders selected to serve the Exhibits Transportation Unit is not expected to exceed five, and the period of service is anticipated to be a minimum of two years.

General

The opening of an exhibition will not be delayed because of transportation problems. All cargo must arrive overseas in sufficient time for clearance through customs, delivery to the Exhibition site, be unpacked, set-up and ready for demonstration in the exhibitor's booth when the Exhibition is formally opened.

It is the exhibitors' responsibility to deliver exhibit materials to the designated sea or air port of export. The freight forwarder must have the capability of handling all details relating to the transport of exhibitors' materials from the port of export to the designated port of entry overseas. The freight forwarder must also have the capability to arrange U.S. domestic transportation to the port of export as, on occasion, the exhibitor may ask the freight forwarder to handle a shipment from its origin point.

All domestic and international transportation costs, freight forwarding fees and other expenses incurred in shipping goods to a USDOC-sponsored exhibition are, unless otherwise specified by the Exhibits Transportation Unit, for the account of each individual exhibitor. The fees for such services performed by the freight forwarder, along with any other expenses which may be incurred on behalf of the exhibitor in clearing export cargo through a port, are to be billed directly to the exhibitor. A copy of the invoice to the exhibitor for transportation and other freight forwarding services rendered is to be sent to Exhibits Transportation for its permanent exhibition records.

Procedure

1. The freight forwarder is primarily responsible for arranging and carrying out all necessary services incidental to the handling of outbound shipments by surface or air. Exhibits Transportation will provide detailed instructions regarding consignment, marks, document distribution, delivery deadlines, etc. Complete shipping instructions are to be issued to each exhibitor by the freight forwarder within five working days of receipt of a copy of the Participation Agreement (PA). This document will be sent to the freight forwarder by Exhibits Transportation upon its receipt from the exhibitor. Exhibits Transportation will have already contacted each exhibitor by telephone to confirm the company name, address, the person to whom instructions are to be sent, and the desired mode of transportation overseas. Case numbers to be assigned to exhibitors by the freight forwarder will be indicated on the cover letter transmitting the Participation Agreement.

2. At the time shipping instructions are sent by the freight forwarder to the exhibitor, a copy of such instructions are to be mailed to: Irvin W. Lloyd, Chief, Exhibits Transportation, Room H1848, Export Promotion Services, U.S. Department of Commerce, Washington, DC 20230.

3. The freight forwarder assumes responsibility for following up with each exhibitor to assure that the shipping instructions have been received and that the exhibitor can meet the established delivery deadline at the port of export. Exhibits Transportation must be promptly consulted regarding any exhibitor whose goods cannot be shipped on the scheduled carrier so alternative arrangements can be determined promptly. Once this is done the exhibitor is to be advised by telephone followed by a confirming telex, with a copy to Exhibits Transportation, as to the new shipping arrangements.

4. When economically feasible to do so, and considering all the factors of international transportation, Exhibits Transportation attempts to arrange for the exhibitor to deliver their cargo to the nearest port of export, thus holding down inland transportation costs.

5. In order to keep overseas transportation expenses for exhibitors to a minimum, the shipment of exhibit materials via sea and air is to be consolidated or assembled if time permits, if it is economically feasible to do so, and if such service and appropriate equipment is available from the carrier. Exhibition cargo may not be consolidated with commercial or other non-exhibition freight. Savings resulting from consolidation and/or assembly are to be passed on to the individual exhibitor companies.

6. For a specific exhibition the freight forwarder may receive and consolidate or assemble cargo at its own terminal and then arrange for delivery of the cargo to the carrier at the designated time; or the freight forwarder may, upon arrival of the cargo in the port area, arrange for delivery direct to the carrier. Normal procedure requires equipment and display materials for exhibitions to be shipped on one vessel or aircraft. If, due to circumstances beyond the freight forwarder's control, the exhibitor delivers to the port too late for its goods to be included in the primary shipment, the freight forwarder will arrange for secondary or tertiary shipments.

7. Once the quantity of cargo is known the freight forwarder will arrange for the booking of cargo space on a vessel or aircraft which will provide delivery to the overseas port of discharge, be it sea or air, within the established time frame. (The carrier and vessel or aircraft selected will be determined through consultation with Exhibits Transportation). The freight forwarder is expected to negotiate the best possible rate for the shipment of exhibitor cargos to the overseas port of entry. Service is being provided to United States Government-sponsored exhibitions, therefore, American flag carriers are to be utilized for all sea and air shipments unless such service is not available or a confirmed booking of cargo space cannot be obtained which will enable the delivery deadline overseas to be met. Another factor in selection of a carrier is direct service. There are exceptions, but transshipment is not normally permitted.

8. For certain events, especially the large international fairs in which the Department of Commerce participates, a freight forwarder/customs broker overseas is often designated by the fair organizer as the consignee or notify party. They will handle customs clearance and local delivery to the fair site. Should one of these companies telex or telephone shipping instructions from overseas or through an office or agent in the United States which contradict those already issued, Exhibits Transportation is to be notified at once. Any changes in shipping instructions are not to be accepted or implemented without first obtaining verbal and written concurrence from Exhibits Transportation.

9. *Surface Shipments.* Details regarding each shipment are to be telephoned and confirmed by telex to Exhibits Transportation not later than three working days following the departure of the vessel on which the cargo is booked. Information required is as follows:

(1) Name of carrier, vessel and voyage number
(2) Port of export and sailing date
(3) ETA at foreign discharge port
(4) Name of exhibitor (shipper)
(5) Number of pieces
(6) Weight (in pounds)
(7) Cubic feet
(8) B/L number
(9) If cargo is containerized or palletized, identify the number of each container or pallet and information regarding its contents (items (4), (5), (6), and (7) above).

10. *Air Shipments.* Details regarding each shipment are to be telephoned and confirmed by telex to Exhibits Transportation not later than the day of departure of the aircraft on which the cargo is booked. Information required is as follows:

(1) Name of carrier and flight number
(2) Port and date of departure
(3) ETA at foreign discharge port
(4) Name of exhibitor (shipper)
(5) Number of pieces
(6) Weight (in pounds)
(7) Value (in U.S. dollars)
(8) AWB/HB number
(9) If cargo is containerized or palletized, identify the number of each container or pallet and information regarding its contents (items (5), (6), and (7) above).

11. After cargo has been loaded on a vessel or aircraft, complete sets of documents are to be distributed promptly according to instructions issued by Exhibits Transportation.

12. Provide the Chief, Exhibits Transportation, within 30 days of the end of each calendar quarter, a summary of freight revenues on each carrier (sea or air) transporting goods from the United States to exhibitions overseas on behalf of the Department of Commerce. The format for submission of this information will be provided by Exhibits Transportation.

13. Disposition of equipment and display materials at the close of an exhibition is the responsibility of each exhibitor; however, the Department of Commerce provides assistance to each exhibitor in arranging for return transportation. This assistance consists of providing labor for repacking of exhibit materials and placement on a local carrier at the exhibit site for delivery to the designated port of export (sea or air) for return to the United States. These arrangements will be made by the local freight forwarder overseas that is under contract to the Department of Commerce for the Exhibition. Most cargo shipped to an exhibition does not return to the United States. Unless advised to the contrary by the exhibitor, Exhibits Transportation's instructions to the Exhibition Manager for any display materials being returned to the United States are to consign the shipment(s) to the exhibitor, in care of the freight forwarder who handled the shipment outbound. The freight forwarder must, therefore, have the ability to handle all the necessary customs clearances, documentation, and transportation arrangements to the ultimate destination in the United States on behalf of the exhibitor. The overseas freight forwarder will be instructed by the Exhibition Manager to telex complete shipping information to the forwarder/broker in the United States regarding return shipments with a copy to Exhibits Transportation for information only. The forwarder/broker will communicate with the overseas forwarder and with the exhibitor in the United States to the

extent necessary to assure delivery of the return shipment to the exhibitor's satisfaction.

14. Telexes for the Exhibits Transportation Unit should be addressed as follows: Exhibits Transportation (code 3330), Attn: Irvin Lloyd, X-0693, Telex: 892536 USDOC WASH.

15. Documents and information can be transmitted to Exhibits Transportation via FAX. They should be addressed as follows: Irvin Lloyd, Exhibits Transportation, Room H1848, Telephone: x0693. The FAX number is (202) 377-4515.

Irvin W. Lloyd,

Chief, Exhibits Transportation Unit, Export Promotion Services, U.S. and Foreign Commercial Service.

[FR Doc. 87-14381 Filed 6-24-87; 8:45 am]

BILLING CODE 3510-FP-M

COMMITTEE FOR THE IMPLEMENTATION OF TEXTILE AGREEMENTS

Import Restraint Limits for Certain Wool Textile Products Produced or Manufactured in Czechoslovakia

June 22, 1987.

The Chairman of the Committee for the Implementation of Textile Agreement (CITA), under the authority contained in E.O. 11651 of March 3, 1972, as amended, has issued the directive published below to the Commissioner of Customs to be effective on June 26, 1987. For further information contact Janet Heinzen, International Trade Specialist (202) 377-4212. For information on the quota status of these limits, please refer to the Quota Status Reports which are posted on the bulletin boards of each Customs port. For information on embargoes and quota re-openings, please call (202) 377-3715.

Background

The Bilateral Cotton, Wool and Man-Made Fiber Textile Agreement of June 25 and July 22, 1986 between the Governments of the United States and the Czechoslovak Socialist Republic establishes limits for wool textile products in Categories 435 and 443, produced or manufactured in Czechoslovakia and exported during the agreement year which began on June 1, 1987 and extends through May 31, 1988.

Accordingly, in the letter which follows this notice, the Chairman of CITA directs the Commissioner of Customs to prohibit entry into the United States for consumption, or withdrawal from warehouse for comsumption, of wool textile products in Categories 435 and 443, in excess of the designated restraint limits.

A description of the textile categories in terms of T.S.U.S.A. numbers was published in the **Federal Register** on December 13, 1982 (47 FR 55709), as amended on April 7, 1983 (48 FR 15175), May 3, 1983 (48 FR 19924), December 14, 1983, (48 FR 55607), December 30, 1983 (48 FR 57584), April 4, 1984 (49 FR 13397), June 28, 1984 (49 FR 26622), July 16, 1984 (49 FR 28754), November 9, 1984 (49 FR 44782), July 14, 1986 (51 FR 25386), July 29, 1986 (51 FR 20768) and in Statistical Headnote 5, Schedule 3 of the Tariff Schedules of the United States Annotated (1987).

Adoption by the United States of the Harmonized Commodity Code (HCC) may result in some changes in the categorization of textile products covered by this notice. Notice of any necessary adjustments to the limits affected by adoption of the HCC will be published in the **Federal Register.**

This letter and the actions taken pursuant to it are not designed to implement all of the provisions of the bilateral agreement, but are designed to assist only in the implementation of certain of its provisions.

Ronald I. Levin,

Acting Chairman, Committee for the Implementation of Textile Agreements.

June 22, 1987.

Committee for the Implementation of Textile Agreements

Commission of Customs,

Department of the Treasury, Washington, DC 20229

Dear Mr. Commissioner: Under the terms of Section 204 of the Agricultural Act of 1956, as amended (7 U.S.C. 1854), and the Arrangement Regarding International Trade in Textile done at Geneva on December 20, 1973, as further extended on July 31, 1986; pursuant to the Bilateral Cotton, Wool and Man-Made Fiber Textile Agreement of June 25 and July 22, 1986, between the Governments of the United States and the Czechoslovak Socialist Republic; and in accordance with the provisions of Executive Order 11651 of March 3, 1972, as amended, you are directed to prohibit, effective on June 26, 1972, as amended, you are directed to prohibit, effective on June 26, 1987, entry into the United States for consumption and withdrawal from warehouse for consumption of wool textile products in Categories 435 and 443, produced or manufactured in Czechoslovakia and exported during the twelve-month period which began on June 1, 1987 and extends through May 31, 1988, in excess of the following levels of restraint:

Category	12-month restraint limit [1]
435	7,070 dozen.
443	6,060 dozen.

[1] These limits have not been objected to account for any imports exported after May 31, 1987.

In carrying out this directive, entries of textile products in Categories 435 and 443, produced or manufactured in Czechoslovakia and exported to the United States on and after June 1, 1986 and extending through May 31, 1987, shall, to the extent of any unfilled balances, be charged against the levels of restraint established for such goods during that twelve-month period. In the event the levels of restraint established for the period have been exhausted by previous entries, such goods shall be subject to the levels set forth in this letter.

The limits set forth above are subject to adjustment pursuant to the provisions of the bilateral agreement of June 25 and July 22, 1986 between the Governments of the United States and the Czechoslovakia Socialist Republic, which provide, in part, that: (1) the restraint limits may be exceeded by not more than 5 percent, provided that a corresponding reduction in equivalent square yards is made in another specific limit during the same agreement year; (2) the restraint limits may be increased by carryover and carryforward up to 11 percent of the applicable category limit except that no carryforward shall be available in the final agreement year; and (3) administrative arrangements or adjustments may be made to resolve minor problems arising in the implementation of the bilateral agreement. Any appropriate future adjustments under the foregoing provisions of the bilateral agreement will be made to you by letter.

In carrying out the above directions, the Commissioner of Customs should construe entry into the United States for consumption to include entry for consumption into the Commonwealth of Puerto Rico.

The Committee for the Implementation of Textile Agreements has determined that these actions fall within the foreign affairs exception to the rulemaking provisions of 5 U.S.C. 533(a)(1).

Ronald I. Levin,

Acting Chairman, Committee for the Implementation of Textile Agreement.

[FR Doc. 87-14453 Filed 6-24-87; 8:45 am]

BILLING CODE 3510-DR-M

Import Restraint Limits for Certain Cotton and Man-Made Fiber Textile Products Produced or Manufactured in Turkey

June 22, 1987.

The Chairman of the Committee for the Implementation of Textile Agreements (CITA), under the authority contained in E.O. 11651 of March 3, 1972, as amended, has issued the directive published below to the Commissioner of Customs to be effective on July 1, 1987. For further information contact Ross Arnold, International Trade Specialist, Office of Textiles and Apparel, U.S. Department of Commerce, (202) 377-4212. For information on the quota status of these limits, please refer to the Quota Status Reports which are posted on the bulletin boards of each Customs port. For information on embargoes and quota re-openings, please call (202) 377-3715.

Background

The Bilateral Cotton and Man-Made Fiber Textile Agreement of October 18, 1985, as amended and extended, establishes import restraint limits for cotton and man-made fiber textiles and textile products in Categories 300/301, 317, 319, 335, 339, 340/640, 341, 348, 350, 361, 369-S, 604-O and 605-H, produced or manufactured in Turkey and exported during the twelve-month period which begins on July 1, 1987 and extends through June 30, 1988. The limit for Category 339 has been adjusted to account for carryforward used in the 1986-1987 agreement year.

The limit for 604-O has been adjusted to account for overshipments totalling 791,486 pounds from the July 1, 1986-June 30, 1987 period.

Accordingly, in the following letter the Chairman of CITA directs the Commissioner of Customs to prohibit entry into the United States for consumption, or withdrawal from warehouse for consumption, of the aforementioned cotton and man-made fiber textile products in excess of the designated restraint limits. The category coverage and limits in that letter may be adjusted for the Harmonized System beginning January 1, 1988.

A description of the textile categories in terms of T.S.U.S.A. numbers was published in the **Federal Register** on December 13, 1982 (47 FR 55709), as amended on April 7, 1983 (48 FR 15175), May 3, 1983 (48 FR 19924), December 14, 1983 (48 FR 55607), December 30, 1983 (48 FR 57584), April 4, 1984 (49 FR 13397), June 28, 1984 (49 FR 26622), July 16, 1984 (49 FR 28754), November 9, 1984 (49 FR 44782), July 14, 1986 (51 FR 25386), July 29, 1986 (51 FR 27068) and in Statistical Headnote 5, Schedule 3 of the Tariff Schedules of the United States Annotated (1987).

Ronald I. Levin,

Acting Chairman, Committee for the Implementation of Textile Agreements.

June 22, 1987.

Committee for the Implementation of Textile Agreements

Commissioner of Customs,

Department of the Treasury, Washington, DC 20229

Dear. Mr. Commissioner: Under the terms of Section 204 of the Agricultural Act of 1956, as amended (7 U.S.C. 1854), and the Arrangement Regarding International Trade in Textiles done at Geneva on December 20, 1973, as further extended on July 31, 1986; pursuant to the Bilateral Cotton and Man-Made Fiber Textile Agreement of October 18, 1985, as amended and extended, between the Governments of the United States and the Republic of Turkey; and in accordance with the provisions of Executive Order 11651 of March 3, 1972, as amended, you are directed to prohibit, effective on July 1, 1987, entry into the United States for consumption and withdrawal from warehouse for consumption of cotton and man-made fiber textiles and textile products in Categories 300/301, 317, 319, 335, 339, 340/640, 341, 348, 350, 361, 396-S, 604-O and 605-H, produced or manufactured in Turkey and exported during the twelve-month period which begins on July 1, 1987 and extends through June 30, 1988, in excess of the following limits:

Category	12-Month restraint limit
300/301	5,500,000 pounds.
317	13,250,000 square yards of which not more than 2,120,000 square yards shall be in Category 317-S, which is TSUS items 320.—through 331.—with statistical suffixes 50, 87 and 93.
319	11,660,000 square yards.
335	77,910 dozen.
339	460,000 dozen.
340/640	468,000 dozen of which not more than 234,000 dozen shall be in Category 340-Y/640-Y, which is TSUSA numbers 381.0522, 381.3132, 381.3142, 381.3152, 381.5500, 381.5610, 381.5625, 381.5637, 381.5660, 381.9535, 381.9547 and 381.9550.
341	452,000 dozen of which 187,200 dozen shall be in Category 341-Y, which is TSUSA numbers 384.4608, 384.4610, 384.4612.
348	583,000 dozen of which not more than 291,500 dozen shall be in Category 348-T, which is TSUSA numbers 376.5440, 384.0015, 384.0262, 384.0263, 384.0265, 384.0266, 384.0267, 384.0269, 384.0608, 384.0612, 384.0614, 384.0618, 384.0711, 384.0712, 384.0722, 384.0724, 284.0726, 384.0729, 384.0731, 384.0733, 384.0734, 384.0736, 384.0965, 384.2706, 384.2751, 384.3026, 384.3027, 384.3029, 384.3035, 384.3038, 384.3042, 384.3044, 384.3466, 384.4520, 384.4647, 384.4648, 384.4651, 384.4652, 384.4735, 384.4740, 384.4746, 384.4747, 384.4750, 384.4755, 384.4763, 384.4764, 384.4765, 384.4770, 384.4774, 384.4776, 384.5275, 384.5422, 384.5526, 384.7716, 384.7815, 384.9527 and 791.7420.
350	87,980 dozen.
361	402,800 numbers.
369-S [1]	1,537,000 pounds.
604-O [2]	58,514 pounds.
605-H [3]	1,038,800 pounds.

[1] In Category 369, only TSUSA number 366.2840.

[2] In Category 604, all TSUSA numbers except 310.5049.

[3] In Category 605, only TSUSA numbers 301.9310 and 310.9320.

The restraint limits set forth above are subject to adjustment pursuant to the provisions of the bilateral agreement of October 18, 1985, as amended and extended, which provide, in part, that: (1) specific limits may be increased by 7 percent swing during an agreement period and (2) specific limits may be increased by carryover and carryforward up to 11 percent of the applicable category limit. Any appropriate adjustments under the provisions of the bilateral agreement referred to in this paragraph will be made to you by letter.

In carrying out this directive, entries of textile products in the foregoing categories, produced or manufactured in Turkey, which have been exported to the United States, in the case of Categories 300/301, 317, 319, 335, 319, 340/640, 341, 348, 361, 369-S and 604-O, on or after July 1, 1986; and, in the case of Categories 350 and 605-H, on or after November 1, 1986; and extending through June 30, 1987, shall to the extent of any unfilled balances, be charged against the limits established for such goods during those restraint periods. In the event the limits established for those periods have been

exhausted by previous entries, such goods shall be subject to the limits set forth in this letter.

In carrying out the above directions, the Commissioner of Customs should construe entry into the United States for consumption to include entry for consumption into the Commonwealth of Puerto Rico.

The Committee for the Implementation of Textile Agreements has determined that these actions fall within the foreign affairs exception to the rulemaking provisions of 5 U.S.C. 553.

Sincerely,

Ronald I. Levin,

Acting Chairman, Committee for the Implementation of Textile Agreements.

[FR Doc. 87-14454 Filed 6-24-87; 8:45 am]

BILLING CODE 3510-DR-M

Announcement of an Import Limit for Certain Wool Textile Products Produced or Manufactured in Uruguay

June 22, 1987.

The Chairman of the Committee for the Implementation of Textile Agreements (CITA), under the authority contained in E.O. 11651 of March 3, 1972, as amended, has issued the directive published below to the Commissioner of Customs to be effective on July 1, 1987. For further information contact Janet Heinzen, International Trade Specialist (202) 377-4212. For information on the quota status of this limit, please refer to the Quota Status Reports which are posted on the bulletin boards of each Customs port. For information on enbargoes and quote re-openings, please call (202) 377-3715.

Background

The Bilateral Wool Textile Agreement, effected by exchange of notes dated January 23, 1984, as amended, between the Governments of the United States and Uruguay establishes a specific restraint limit for wool skirts in Category 442, produced or manufactured in Uruguay and exported during the agreement year which begins on July 1, 1987 and extends through June 30, 1988. The letter which follows this notice directs the Commissioner of Customs to prohibit entry for consumption of wool textile products in Category 442, produced or manufactured in Uruguay and exported during the agreement year which begins on July 1, 1987 and extends through June 30, 1988, in excess of the designated limit.

A description of the textile categories in terms of T.S.U.S.A. numbers was published in the **Federal Register** on December 13, 1982 (47 FR 55709), as amended on April 7, 1983 (48 FR 15175), May 3, 1983 (48 FR 19924), December 14, 1983 (48 FR 55607), December 30, 1983 (48 FR 57584), April 4, 1984 (49 FR 13397), June 28, 1984 (49 FR 26622), July 16, 1984 (49 FR 28754), November 9, 1984 (49 FR 44782), July 14, 1986 (51 FR 25386), July 29, 1986 (51 FR 27068) and in Statistical Headnote 5, Schedule 3 of the Tariff Schedules of the United States Annotated (1987).

Adoption by the United States of the Harmonized Commodity Code (HCC) may result in some changes in the categorization of textile products covered by this notice. Notice of any necessary adjustments to the limits affected by adoption of the HCC will be published in the **Federal Register.**

Ronald I. Levin,

Acting Chairman, Committee for the Implementation of Textile Agreements.

Committee for the Implementation of Textile Agreements

June 22, 1987.

Commissioner of Customs,

Department of the Treasury, Washington, D.C. 20229

Dear Mr. Commissioner: Under the terms of Section 204 of the Agricultural Act of 1956, as amended (7 U.S.C. 1854), and the Arrangement Regarding International Trade in Textiles done at Geneva on December 20, 1973, as further extended on July 31, 1986; pursuant to the Bilateral Wool Textile Agreement, effected by exchange of notes dated January 23, 1984, as amended, between the Governments of the United States and Uruguay; and in accordance with the provisions of Executive Order 11651 of March 3, 1972, as amended, you are directed to prohibit, effective on July 1, 1987, entry into the United States for consumption and withdrawal from warehouse for consumption of wool textile products in Category 442, produced or manufactured in Uruguay and exported during the twelve-month period which begins July 1, 1987 and extends through June 30, 1988, in excess of 27,543 dozen.

In carrying out this directive, wool textile products in Category 442, produced or manufactured in Uruguay and exported to the United States during the twelve-month period which began on July 1, 1986 and extends through June 30, 1987, shall, to the extent of any unfilled balance, be charged against the restraint limit established for such goods during that period. In the event the limit established for that period has been exhausted by previous entries, such goods shall be charged to the limit established in this directive.

This limit is subject to adjustment in the future according to the provisions of the bilateral agreement, as amended, which provide, in part, that: (1) the specific limits may be adjusted for carryover and carryforward and (2) administrative arrangements or adjustments may be made to resolve minor problems arising from the implementation of the agreement.

In carrying out the above directions, the Commissioner of Customs should construe entry into the United States for consumption to include entry for consumption into the Commonwealth of Puerto Rico.

The Committee for the Implementation of Textile Agreements has determined that this action falls within the foreign affairs exception to the rulemaking provisions of 5 U.S.C. 553.

Sincerely,

Ronald I. Levin,

Acting Chairman, Committee for the Implementation of Textile Agreements.

[FR Doc. 87-14455 Filed 6-24-87; 8:45 am]

BILLING CODE 3510-DR-M

DEPARTMENT OF DEFENSE

Department of the Army

Lawyers: Professional Conduct

AGENCY: Army Department, DOD.

ACTION: Notice.

SUMMARY: Notice is hereby given that The Judge Advocate General of the Army intends to adopt Rules of Professional Conduct for lawyers over who The Judge Advocate General of the Army has disciplinary authority pursuant to Rule for Court-Martial 109.

DATES: The Rules of Professional Conduct will be effective on October 1, 1987.

ADDRESSES: Copies of the Rules of Professional Conduct are available for public inspection upon request at the following location: Department of the Army, Office of The Judge Advocate General, Criminal Law Division, Room 2D434, Pentagon, Washington, DC 20310-2200.

FOR FURTHER INFORMATION CONTACT: Lieutenant Colonel Alexander Walczak at the address given above; telephone 202/695/5468, (AUTOVON) 225-5468.

SUPPLEMENTARY INFORMATION: The Rules of Professional Conduct to be adopted by The Judge Advocate General of the Army are based on the Model Rules of Professional Conduct adopted by the American Bar Association House of Delegates on August 2, 1983.

John O. Roach, II,

Army Liaison Officer with the Federal Register.

[FR Doc. 87-14384 Filed 6-24-87; 8:45 am]

BILLING CODE 3710-08-M

Army Science Board; Closed Meeting

In accordance with section 10(a)(2) of the Federal Advisory Committee Act (Pub. L. 92-463), announcement is made of the following Committee Meeting:

Name of the Committee: Army Science Board (ASB)

Date of Meeting: 13 July 1987
Time of Meeting: 0900–1700 hours
Place: HQ, Army Materiel Command, Alexandria, VA.

Agenda: The Army Science Board Ad Hoc Subgroup for Army Analysis will meet to review the reorganization as it affects the acquisition process, and review the analytical support to the acquisition process. This meeting will be closed to the public in accordance with section 552b(c) of Title 5, U.S.C., specifically subparagraph (1) thereof, and Title 5, U.S.C., Appendix 1, subsection 10(d). The classified and unclassified matters and proprietary information to be discussed are so inextricably intertwined so as to preclude opening any portion of the meeting. Contact the Army Science Board Administrative Officer, Sally Warner, for further information at (202) 695–3039 or 695–7046.

Sally A. Warner,
Administrative Officer, Army Science Board.
[FR Doc. 87–14432 Filed 6–24–87; 8:45 am]
BILLING CODE 3710–08–M

Army Science Board; Closed Meeting

In accordance with section 10(a)(2) of the Federal Advisory Committee Act (Pub. L. 92–463), announcement is made of the following Committee Meeting:

Name of the Committee: Army Science Board (ASB).

Dates of Meeting: 16–17 July 1987.

Times of Meeting:

0930–1700 hours, 16 July 1987.

0800–1530 hours, 17 July 1987.

Place: Pentagon, Washington, DC.

Agenda: The Army Science Board's Ad Hoc Committee on Implementing Competitive Strategies will meet to review near term systems and technologies and determine which must be applied to Competitive Strategies Initiatives. Briefings will be presented by SARD, AMC and LABCOM. Representatives from industry will attend and present proprietary information regarding promising technologies to support these initiatives.

This meeting will be closed to the public in accordance with section 552b(c) of Title 5, U.S.C., specifically subparagraph (1) thereof, and Title 5, U.S.C., Appendix 1, subsection 10(d).

The classified and nonclassified matters to be discussed are so inextricably intertwined so as to preclude opening any portion of the meeting. The ASB Administrative Officer, Sally Warner, may be contacted for further information at (202) 695–3039 or 695–7046.

Sally A. Warner,
Administrative Officer, Army Science Board.
[FR Doc. 87–14383 Filed 6–24–87; 8:45 am]
BILLING CODE 3710–08–M

Military/Industry Mobile Homes Symposium; Open Meeting

Announcement is made of meeting of the Military/Industry Mobile Homes Symposium. This meeting will be held on 25 June 1987 at Headquarters Miltary Traffic Management Command, 5611 Columbia Pike, Falls Church, Virginia, and will convene at 0930 hours and adjourn at approximately 1500 hours.

Proposed Agenda: The purpose of the symposium is to provide an open discussion and free exchange of ideas with the public on procedural changes to Personal Property Traffic Management Regulation (DOD 4500.34R), and the handling of other matters of mutual interest concerning the Department of Defense Personal Property Shipment and Storage Program.

All interested persons desiring to submit topics to be discussed should contact the Commander, Military Traffic Management Command, ATTN: MT-PPM, at telephone number 756–1600, between 0800–1530 hours. Topics to be discussed should be recevied on or before 12 June 1987.

Dated: June 3, 1987.

Joseph R. Marotta,
Colonel, GS Director of Personal Property,
[FR Doc. 87–14382 Filed 6–24–87; 8:45 am]
BILLING CODE 3710–08–M

DEPARTMENT OF ENERGY

Federal Energy Regulatory Commission

[Docket Nos. ER87–486–000 et al.]

Electric Rate and Corporate Regulation Filings; Detroit Edison Co. et al.

June 18, 1987.

Take notice that the following filings have been made with the Commission:

1. Detroit Edison Company

[Docket No. ER87–486–000]

Take notice that Detroit Edison Company (Detroit Edison) on June 12, 1987, tendered for filing a Letter Agreement dated April 30, 1987 between Detroit Edison and Commonwealth Edison Company (Commonwealth) which redetermines the fixed charge factor applicable to transactions under the "Agreement for Sale of Portion of Generating Capability of Ludington Pumped Storage Plant by the Detroit Edison Company to Commonwealth Edison Company," dated June 1, 1971, as amended through Amendment No. 3 dated July 1, 1985 (Agreement), denoted The Detroit Edison Company Rate Schedule FPC (now FERC) No. 28. Detroit Edison states that the fixed charge factor was redetermined pursuant to the terms of the Agreement and does not amend the Agreement.

Detroit Edison states that the Letter Agreement reduces the fixed charge factor from 14.582% to 13.527% on and after January 1, 1987 and further reduces the fixed charge factor from 13.537% to 12.492% on and after January 1, 1988. Detroit Edison states that the Tax Reform Act of 1986, effective January 1, 1987 reduces the effective corporate income tax rate from 46% to 40%; the effect of this was a reduction of 1.045% in the fixed charge factor. Detroit Edison states the fixed charge factor is subject to further redetermination during the term of the Agreement in accordance with section 4.2 thereof.

Detroit Edison states that copies of the filing were served on Commonwealth, Consumers Power Company and on the Michigan Public Service Commission.

Detroit Edison requests waiver of the notice requirements to permit a retroactive effective date of January 1, 1987 for the 13.537% fixed charge rate.

Comment date: July 6, 1987, in accordance with Standard Paragraph E at the end of this notice.

2. Montana Power Company

[Docket No. ER87–485–000]

Take notice that on June 12, 1987, Montana Power Company (MPC) tendered for filing pursuant to section 205 of the Federal Power Act and agreement dated April 8, 1987 for the sale of firm energy to the Washington Water Power Company during the period from June 15, 1987 through November 30, 1987.

MPC has requested waiver of the notice provisions of § 35.3 of the Commission's regulations in order to permit the agreement to become effective as of June 15, 1987 in accordance with its terms.

Comment date: July 6, 1987, in accordance with Standard Paragraph E at the end of this notice.

3. Montaup Electric Company

[Docket No. ER87–440–000]

Take notice that by letter of June 11, 1987 in the captioned docket Montaup Electric Company (1) requests waiver of

the 60 day notice requirement to permit the decrease in charges for radial transmission service to Middleborough, Massachusetts, filed in this docket to become effective on January 1, 1987 and (2) states that in the next annual update of those charges to be filed in federal income tax rate.

Comment date: July 6, 1987, in accordance with Standard Paragraph E at the end of this notice.

4. Southern California Edison Company

[Docket No. ER87-483-000]

Take notice that Southern California Edison Company, on June 11, 1987, tendered for filing proposed changes in its FERC Electric Service Tariff, Time-of-Use Resale Service, Schedule No. R-4.1. The proposed change incorporated in proposed Schedule No. R-5.0 would decrease revenues for the 12-month period ending December 31, 1987, from jurisdictional sales and service by $6.7 million from revenues at present rates, Schedule No. R-4.1. The proposed changes in Schedule No. R-5.0 would also result in decreased revenues for the 12-month period ending December 31, 1987, from jurisdictional sales and service of $3.7 million from revenues at proposed rates, Schedule No. R-4.2 which have been filed in Docket No. ER87-365-000 to reflect the impact of the Tax Reform Act of 1986 on the resale revenue requirement.

Southern California Edison Company requests an effective date for proposed rates, Schedule No. R-5.0, on June 11, 1987, the date of filing.

As a part of this same filing, Southern California Edison company tendered for filing additional proposed changes in its FERC Electric Service Tariff, Time-of-Use Resale Service, Schedule No. R-4.1. The proposed changes incorporated in proposed Schedule No. R-6.0 would further decrease revenues for the 12-month period ending December 31, 1987, from jurisdictional sales and service by $4.6 million from revenues at proposed rates, Schedule No. R-5.0.

This further decrease is the result of a settlement which Edison has reached with all except one of its resale customers. This decrease in resale revenues is subject to various adjustments under terms of the settlement.

Southern California Edison Company requests an effective date for proposed rates, Schedule No. R-6.0, on June 1, 1987, to be applicable to those resale customers who are parties to the settlement agreement.

The reasons for the proposed change are to reflect in rates decreased costs of providing service and to modify the Fuel Cost Adjustment provisions of Edison's tariffs.

Copies of the filing were served upon the public utility's jurisdictional customers, the California Public Utilities Commission, and the Arizona Corporation Commission.

Comment date: July 6, 1987, in accordance with Standard Paragraph E at the end of this notice.

5. Tampa Electric Company

[Docket No. ER87-484-000]

Take notice that on June 12, 1987, Tampa Electric Company (Tampa Electric) tendered for filing cost support schedules showing changes in the Committed Capacity and Short-Term Power Transmission Service rates under Tampa Electric's agreement to provide qualifying facility transmission service for Royster Company (Royster), designated as Tampa Electric's Rate Schedule FERC No. 28. Tampa Electric states that the revised transmission service rates are based on 1986 Form No. 1 data, and are developed by the same method that was utilized in the cost support schedules accompanying the initial filing of the transmission service agreement.

Tampa Electic proposes that the revised transmission service rates be made effective as of May 1, 1987, and therefore requests waiver of the Commission's notice requirements.

Copies of the filing have been served upon Royster and the Florida Public Service Commission.

Comment date: July 6, 1987, in accordance with Standard Paragraph E at the end of this notice.

6. UtiliCorp United Inc.

[Docket No. ES87-32-000]

Take notice that on June 5, 1987, UtiliCorp United Inc., pursuant to section 204 of the Federal Power Act, filed an application for authorization to issue up to and including 300,000 shares of common stock, par value $1.00 per share, the United Missouri Bank of Kansas City, NA, as Trustee of the UtiliCorp United Inc. Employee Benefit Plans Master Trust and to issue up to and including 175,000 shares of common stock, par value $1.00 per share, in connection with its 1986 Stock Incentive Plan.

Comment date: July 6, 1987, in accordance with Standard Paragraph E at the end of this notice.

6. Texas Utilities Electric

[Docket No. ER82-545-003]

Take notice that Texas Utilities Electric Company (TU Electric) on June 11, 1987 tendered for filing pursuant to the Commission's letter approving and adopting the settlement in *Public Service Company of Oklahoma, et. al.*, Docket Nos. ER82-245-000, *et. al.*, issued on January 27, 1987, a compliance refund report in the above-referenced proceeding. TU Electric states that it has made no refunds and no refunds are required. Under the settlement approved by the Commission, the Refund period extends from January 27, 1987 through February 26, 1987. TU Electric has not billed its customers under its originally filed tariff rates for service during the refund period, but instead is seeking to collect from them amounts as would be due under the settlement rates approved by the Commission.

Copies of this compliance refund report have been furnished to affected customers and to the state commissions within whose jurisdiction the customers operate.

Comment date: July 6, 1987, in accordance with Standard Paragraph E at the end of this document.

Standard Paragraph

E. Any person desiring to be heard or to protest said filing should file a motion to intervene or protest with the Federal Energy Regulatory Commission, 825 North Capitol Street, NE., Washington, DC 20426, in accordance with Rules 211 and 214 of the Commission's Rules of Practice and Procedure (18 CFR 385.211 and 385.214). All such motions or protests should be filed on or before the comment date. Protests will be considered by the Commission in determining the appropriate action to be taken, but will not serve to make protestants parties to the proceeding. Any person wishing to become a party must file a motion to intervene. Copies of this filing are on file with the Commission and are available for public inspection.

Kenneth F. Plumb,

Secretary.

[FR Doc. 87-14420 Filed 6-24-87; 8:45 am]

BILLING CODE 6717-01-M

[Docket No. G-5999-001]

Application; Anadarko Petroleum Corp.

June 18, 1987.

Take notice that on June 9, 1987, Anadarko Petroleum Corporation (Anadarko), P. O. Box 1330, Houston, Texas 77251, filed in Docket No. G-5999-001 application pursuant to section 7(b) of the Natural Gas Act and § 157.30 of the Federal Energy Regulatory Commission (Commission) for

permission and approval for partial abandonment of sales to their Rate Schedule No. 207 as certified under Docket No. G-5999, all as more fully set forth in the application which is on file with the Commission and open to public inspection.

Anadarko proposes to abandon a portion of the sales to Northern Natural Gas Company (Northern) from the Renfro No. 1 well located in Section 7-33S-37W, Stevens County, Kansas described in the agreement dated December 1, 1951, as amended, to release 7,500 MCF of gas per year to Jimmy J. Moss, a tenant farmer, for irrigation pumping fuel. Applicant and Northern desire to honor such request, upon and subject to Commission approval.

Any person desiring to be heard or to make any protest with reference to said application should on or before July 2, 1987, file with the Federal Energy Regulatory Commission, Washington, DC 20426, a motion to intervene or a protest in accordance with the requirements of the Commission's Rules of Practice and Procedure (18 CFR 385.214 or 385.211) and the Regulations under the Natural Gas Act (18 CFR 157.10). All protests filed with the Commission will be considered by it in determining the appropriate action to be taken but will not serve to make the protestants parties to the proceeding. Any person wishing to become a party to a proceeding or to participate as a party in any hearing therein must file a motion to intervene in accordance with the Commission's Rules.

Take further notice that, pursuant to the authority contained in and subject to the jurisdiction conferred upon the Federal Energy Regulatory Commission by sections 7 and 15 of the Natural Gas Act and the Commission's Rules of Practice and Procedure, a hearing will be held without further notice before the Commission or its designee on this application if no motion to intervene is filed within the time required herein, if the Commission on its own review of the matter finds that permission and approval for the proposed abandonment are required by the public convenience and necessity. If a motion for leave to intervene is timely filed, or if the Commission on its own motion believes that formal hearing is required, further notice of such hearing will be duly given.

Under the procedure herein provided for, unless otherwise advised, it will be unnecessary for Anadarko to appear or be represented at the hearing.

Kenneth F. Plumb,

Secretary.

[FR Doc. 87-14421 Filed 6-24-87; 8:45 am]

BILLING CODE 6717-01-M

[Docket No. RP87-72-000]

Complaint; Interstate Power Company v. Natural Gas Pipeline Company of America

June 18, 1987.

Take notice that on October 27, 1986, Interstate Power Company (Interstate) filed a request for rehearing of a Commission order granting to Natural Gas Pipeline Company of America (Natural) a limited term waiver of § 284.10(a)(1) of the Commission's regulations. Interstate also filed for rehearing of orders extending Natural's waiver on January 7, 1987 and May 18, 1987. By order issued June 17, 1987, the Commission construed Interstate's rehearing requests as a complaint, pursuant to Rule 206, 18 CFR 385.206 (1986). (39 FERC ¶ 61,307 (1987))

Interstate contends that because Natural performed new section 311 transportation from September 4, 1986 through September 25, 1986, without benefit of a waiver of § 284.10(a)(1), Interstate's right to reduce its contract demand vested. Interstate asserts that it had a full forty-five day period, under the Commission's regulations, in which to nominate contract demand reductions, not just the period in which Natural transported without a waiver.

Interstate states that its request includes a copy of a letter dated October 9, 1987 in which Natural declined to honor Interstate's October 3, 1986 request for contract demand reduction, stating that the opportunity to request a contract demand reduction was foreclosed as of September 26, 1986, when Natural was granted a waiver. Interstate also states that it has included a copy of a letter to Natural dated October 16, 1986, in which Interstate renewed its request for a 15 percent reduction in its contract demand.

Interstate requests that the Commission issue an order allowing the full contract demand reductions nominated by Natural's customers between September 5, 1986 and October 20, 1986, to become effective pursuant to the Commission's regulations.

Any person desiring to be heard or to protest said complaint should file a motion to intervene or a protest with the Federal Energy Regulatory Commission, 825 North Capitol Street, NE., Washington, DC 20426, in accordance with Rules 214 and 211 of the Commission's Rules of Practice and Procedure. All such motions or protests should be filed on or before July 20, 1987. Protests will be considered by the Commission in determining the appropriate action to be taken, but will not serve to make protestants parties to the proceeding. Any person wishing to become a party mut file a motion to intervene. Copies of this filing are on file with the Commission and are available for public inspection. Answers to this complaint shall be due on or before July 20, 1987.

Kenneth F. Plumb,

Secretary.

[FR Doc. 87-14422 Filed 6-24-87; 8:45 am]

BILLING CODE 6717-01-M

[Docket No. RP87-47-002]

Compliance Filing; Phillips Gas Pipeline Co.

June 18, 1987.

Take notice that on June 11, 1987, Phillips Gas Pipeline Company (PGPL) tendered for filing Revised Substitute Original Sheet No. 6, Revised Substitute Original Sheet No. 8, and Revised Substitute Original Sheet No. 15 to its FERC Gas Tariff, Original Volume No. 1, in compliance with the Commission's April 1, 1987 order and the OPPR letter order that issued May 27, 1987.

PGPL states that Revised Substitute Original Sheet Nos. 8 and 15 reflect the deletion of the phrase "from operating its system at its maximum throughput". PGPL further states that Revised Substitue Original Sheet No. 6 is being filed to reflect the change in the amount of the Reservation Charge which was incorrectly calculated on the Substitute Original Sheet.

Any person desiring to be heard or to protest said filing should file a motion to intervene or a protest with the Federal Energy Regulatory Commission, 825 North Capitol Street, NE., Washington, DC 20426, in accordance with Rules 214 and 211 of the Commission's Rules of Practice and Procedure. All such motions or protests should be filed on or before June 25, 1987. Protests will be considered by the Commission in determining the appropriate action to be taken, but will not serve to make protestants parties to the proceeding. Any person wishing to become a party must file a motion to intervene. Copies of this filing are on file with the

Commission and are available for public inspection.

Kenneth F. Plumb,

Secretary.

[FR Doc. 87-14423 Filed 6-24-87; 8:45 am]

BILLING CODE 6717-01-M

[Docket No. GP87-54-000]

Transcontinental Gas Pipeline Corp.; Emergency Petition for Immediate Performance of Statutory Mandates

June 18, 1987.

On May 26, 1987, and as supplemented on June 5, 1987, Transcontinental Gas Pipeline Corporation (Transco) filed with the Commission pursuant to § 385.207 of the Commission's rules of practice and procedure an "Emergency Petition For Immediate Performance of the Federal Energy Regulatory Commission's Statutory Mandates." In its petition, Transco urges the Commission to rule that take-or-pay payments for gas which is or has been price regulated will violate the maximum lawful prices established under Title I of the NGPA if such payments will be forfeited. (This problem will be referred to hereafter as the Title I issue.) Transco alleges that pipeline take-or-pay liability is greatly increased when producers are able to receive payment more than once for the same molecules of gas. Transco urges immediate Commission action to address the Title I issue.

According to Transco, the take-or-pay problem has reached critical proportion which cannot be solved by simple pipeline-producer renegotiations as set out in the Commission's proposed policy statement because a large number of producers have refused to renegotiate on reasonable terms. Transco claims the policy statement is directed only at the allocation of cost responsibility and thereby overlooks the existence of the costs themselves.

Transco further states that a prompt decision by the Commission on the Title I issue will help stem alleged producer abuses. Specifically, Transco states that take-or-pay clauses are tied to the amount of gas the producer has available to deliver on a given day. If that quantity is not taken, it remains in the ground and can be repeatedly tendered on successive days. Transco argues the pipeline will eventually have made take-or-pay payments for all the gas in the reservoir, but would continue to have to make take-or-pay payments as long as the gas is not taken. In this manner these payments create what Transco describes as a windfall to producers which bears no relationship to costs incurred from not having gas taken. Transco also argues that enforcement of Title I of the NGPA will significantly reduce settlement costs. Transco claims adverse court decisions and lower sales by pipelines limit a pipeline's flexibility in settlement negotiations with producers. Transco states that this will ultimately cause settlement costs to rise, unless the Commission enforces Title I as requested, in which case settlement costs will be kept to a reasonable level.

Any person desiring to be heard or to protest this petition should file a motion to intervene or protest in accordance with Rules 211 and 214 of the Commission's rules of practice and procedure. All motions to intervene or protests should be submitted to the Federal Energy Regulatory Commission, 825 North Capitol Street, NE., Washington, DC 20426, not later than 30 days after publication of this notice in the **Federal Register**. All protests will be considered by the Commission but will not serve to make protestants parties to the proceeding. Any person wishing to become a party must file a motion to intervene in accordance with Rule 214. Copies of the petition filed in this proceeding are on file with the Commission and available for public inspection. Answers to the complaint are due within the same time period.

Kenneth F. Plumb,

Secretary.

[FR Doc. 87-14424 Filed 6-24-87; 8:45 am]

BILLING CODE 6717-01-M

ENVIRONMENTAL PROTECTION AGENCY

[FRL-3223-2]

Approvals of PSD Permits and Extensions of PSD Permits; Region 6

Notice is hereby given that the Environmental Protection Agency (EPA), Region 6, has issued Prevention of Significant Deterioration (PSD) permits to the following:

1. PSD-TX-675M-1—Sid Richardson Carbon and Gasoline Company: Bass North Word Edwards natural gas sweetening and dyhydration facility located on Highway 318, approximately four miles southwest of Halletsville, Lavaca County, Texas. PSD-TX-675M-1 modifies PSD-TX-675 to authorize an additional 360 days for sampling for sulfur dioxide from the amine reboiler stack since the plant has been operated at much less than plant capacity. The modified permit was issued on January 14, 1987.

2. PSD-TX-720M-1—Power Resources, Incorporated: Gas turbine cogeneration unit constructed at the existing Fina Oil and Chemical Company refinery located on Interstate 20, approximately one mile east of Big Spring, Howard County, Texas. PSD-TX-720M-1 modifies PSD-TX-720 to authorize the installation of two General Electric model MS7001E gas turbines, site rated at 90 MW (maximum at 10°F ambient) electrical output each, rather than the currently permitted two Brown Boveri and Cie model GT-8 units rated at 50 MW (also maximum) each. In addition, Power Resources will increase the firing capacity of the heat recovery steam generators to 130 MMBtu/hr heat input each. The modified permit was issued on January 22, 1987.

3. PSD-TX-475M-1—Red River Army Depot: Replacement boiler facility at the existing Army Depot located approximately ¾ mile south of Hooks, Bowie County, Texas. PSD-TX-475M-1 modifies PSD-TX-475 to show that sulfur dioxide emission monitoring data will not be considered valid or required during periods of start-up, shutdown, or when the boiler is being fired at 10 percent or less of the rated design firing capacity. The modified permit was issued on January 22, 1987.

4. PSD-TX-324M-3—Valero Refining Company: Petroleum refinery located at 6560 Up River Road in Corpus Christi, Nueces County, Texas. PSD-TX-324M-3 modifies PSD-TX-324M-2 to authorize the use of caustic scrubbing in lieu of citrate scrubbing to control particulate matter and sulfur dioxide emissions. This modified permit was issued on January 30, 1987.

5. PSD-TX-711—Liquid Energy Corporation: This permit, issued on February 11, 1987, authorizes the increase of gas processing and an increase in the hours of operation of the TP-1 amine sweetening plant located on Ranch Road 687, approximately five miles southwest of Stinnett, Hutchinson County, Texas.

6. PSD-TX-696M-1—Warren Petroleum Company: Natural gas fractionation plant located on Highway 146 in Mont Belview, Chambers County, Texas. PSD-TX-696M-1 modifies PSD-TX-696 to authorize an increase of the allowable carbon monoxide emission rate from the 50.3 MMBtu/hr heat recovery steam generator from 74.0 to 74.8 pounds per hour. The modified permit was issued on February 11, 1987.

7. PSD-TX-702—Mobil Producing Texas and New Mexico, Incorporated: This permit, issued on February 17, 1987, authorizes the increase of the hydrogen sulfide level from approximately 100 ppm to 1200 ppm in the inlet gas at the Salt Creek Gas Plant located

approximately seven miles northwest of Clairemont, Kent County, Texas.

8. PSD-TX-715—Valley View Energy Corporation: This permit, issued on February 18, 1987, authorizes the construction of a cow manure fired electrical generating station to be located on State Highway 136, approximately 2.5 miles north Gruver, Hansford County, Texas.

9. PSD-TX-209M-1—Houston Lighting and Power Company: South Texas Nuclear Generating Station located approximately 12 miles southwest of Bay City, Matagorda County, Texas. PSD-TX-209M-1 modifies PSD-TX-209 to authorize the removal of the requirement to establish oxygen set points for the control of nitrogen oxides and carbon monoxide. The modified permit was issued on March 11, 1987.

These permits have been issued under EPA's Prevention of Significant Deterioration of Air Quality Regulations at 40 CFR 52.21, as amended August 7, 1980. The time period established by the Consolidated Permit Regulations at 40 CFR 124.19 for petitioning the Administrator to review any condition of the permit decisions has expired. Such a petition to the Administrator is, under 5 U.S.C. 704, a prerequisite to the seeking of judicial review of the final agency action. No petitions for review of these permits have been filed with the Administrator.

Notice is hereby given that the Environmental Protection Agency (EPA), Region 6, has extended the expiration date of the following Prevention of Significant Deterioration (PSD) permits:

1. PSD-TX-480—Central Power and Light Company: This permit, effective on September 2, 1983, authorized the modification of the J. L. Bates Power Station located approximately three miles east of Penitas, Hidalgo County, Texas. The company has postponed the start of construction due to changes in the load growth projections and financial considerations. This additional extension was granted on January 9, 1987, to a new expiration date of March 2, 1988.

2. PSD-TX-481—Central Power and Light Company: This permit, effective on October 12, 1983, authorized the modification of the Laredo Power Station located approximately 3.3 miles north of Laredo, Webb County, Texas. The company has postponed the start of construction due to changes in the load growth projections and financial considerations. This additional extension was granted on January 9, 1987, to a new expiration date of April 12, 1988.

The PSD regulation at 40 CFR 52.21(r)(2) states that the Administrator may extend the 18-month period in which construction must commence if the company shows that an extension is justified.

A notice of EPA's proposed action to extend these PSD permits was published in a newspaper in the affected area of each facility.

Documents relevant to the above actions are available for public inspection during normal business hours at the Air, Pesticides and Toxics Division, U.S. Environmental Protection Agency, Region 6, 1445 Ross Avenue Dallas, Texas 75202.

Under section 307(b)(1) of the Clean Air Act, judicial review of the approval of these actions is available, if at all, only by the filing of a petition for a review in the United States Fifth Circuit Court of Appeals, for sources located in Texas, on or before August 24, 1987. Under section 307(b)(2) of the Clean Air Act, the requirements which are the subject of today's notice may not be challenged later in civil or criminal proceedings brought by EPA to enforce these requirements.

This notice will have no effect on the National Ambient Air Quality Standards.

The office of Management and Budget has exempted this information notice from the requirements of section 3 of Executive Order 12291.

Dated: June 6, 1987.

Robert E. Layton Jr.,

Regional Administrator, Region 6.

[FR Doc. 87-14459 Filed 6-24-87; 8:45 am]

BILLING CODE 6560-50-M

[OW-FRL-3222-9]

Wellhead Protection Program; Guidance Availability

AGENCY: Environmental Protection Agency.

ACTION: Notice.

SUMMARY: This notice announces the availability of new guidance documents for the State Wellhead Protection Program. These are: "Guidance for Applicants for State Wellhead Protection Program Assistance Funds, under the Safe Drinking Water Act" and "Guidelines for the Delineation of Wellhead Protection Areas."

DATE: Copies of these guidance documents will be available from the Regional Offices beginning June 26, 1987.

ADDRESSES: Copies of these documents can be obtained from:

Region I

Robert Mendoza, Office of Ground Water Protection, U.S. EPA, JFK Federal Building, Room WGP-2113, Boston, MA 02203, (617) 565-3600

Region II

John Malleck, Office of Ground Water Management (3WM42), U.S. EPA, 26 Federal Plaza, New York, NY 20178, (212) 264-5635

Region III

Stuart Kerzner, Ground Water Protection Section, U.S. EPA, 841 Chestnut Street, Philadelphia, PA 19107, (215) 597-2786

Region IV

James S. Kutzman, Ground Water Protection Branch, U.S. EPA, 345 Courtland Street, Atlanta, GA 30365, (404) 347-3866

Region V

Jerri-Anne Garl, Office of Ground Water (5WG-TUB9), U.S. EPA, 230 S. Dearborn Street, Chicago, IL 60604, (312) 886-1490

Region VI

Don Draper, Office of Ground Water, U.S. EPA, 4145 Ross Avenue, Dallas, TX 75222-2733, (214) 655-6446

Region VII

Timothy Amsden, Office of Ground Water Protection, U.S. EPA, 726 Minnesota Avenue, Kansas City, KS 66101, (913) 236-2815

Region VIII

Richard Long, Ground-Water Branch, U.S. EPA, 999 18th Street, Suite 500, Denver, CO 80202-2405, (303) 293-1543

Region IX

Patricia Eklund, Office of Ground Water (W-1-G), U.S. EPA, 215 Fremont Street, San Francisco, CA 94105, (415) 974-0831

Region X

William Mullen, Office of Ground Water (WD-139), U.S. EPA, 1200 6th Avenue, Seattle, WA 98101, (206) 422-1086.

In addition, copies can be obtained from: Office of Ground-Water Protection, U.S. Environmental Protection Agency, 401 M Street, SW., Washington, DC 20460, (202) 382-7077.

FOR FURTHER INFORMATION CONTACT: The Regional Offices, or the Office of Ground-Water Protection in EPA Headquarters as listed above.

SUPPLEMENTARY INFORMATION: In accordance with section 1428 of the Safe Drinking Water Act, the Wellhead Protection Program has been established to encourage and assist States to develop systematic and comprehensive

programs within their jurisdictions to protect public water supply wells and wellfields from contamination from all potential anthropogenic sources. The Program's primary goal is to prevent contamination of ground-water sources of drinking water.

The "Guidance for Applicants for State Wellhead Protection Program Assistance Funds under the Safe Drinking Water Act" contains the procedural and technical information that states can use to apply for grant funds to develop Wellhead Protection Programs. It also provides information to States on the content of a Wellhead Protection Program and on the procedures for submitting a program to EPA for approval.

The "Guidelines for the Delineation of Wellhead Protection Areas under the Safe Drinking Water Act" provide technical information which states may use in determining the boundaries of Wellhead Protection Areas (WHPAs) within their jurisdiction. It provides such information as: Hydrogeologic and contaminant factors relevant to delineation; the advantages and disadvantages of various delineation criteria such as distance and time-of-travel; the advantages and disadvantages of various delineation methods such as fixed radius, analytical procedures, and numerical methods; examples of criteria and method selection; and other background on the topic of WHPA delineation.

Dated: June 19, 1987.

Lawrence J. Jensen,

Assistant Administrator for Water.

[FR Doc. 87-14461 Filed 6-24-87; 8:45 am]

BILLING CODE 6560-50-M

[FRL-3223-3]

Science Advisory Board Long-Range Ecological Research Needs Subcommittee; Open Meeting

Under the Federal Advisory Committee Act, Pub. L. 92-463, notice is hereby given that a two-day meeting of the Long-Range Ecological Research Needs Subcommittee of the Science Advisory Board will be held on July 9 and 10, 1987. The meeting will begin at 9:00 a.m. on July 9, and will be held in the Administrator's Conference Room 1103 at the U.S. Environmental Protection Agency, 401 M Street SW., Washington, DC. Adjournment on July 10 will take place no later than 5:00 p.m.

The main purpose of the meeting is to continue an assessment of EPA's ecological research needs, specifically those research needs that address ecological problems that may be encountered or may persist in the future. The Subcommittee will begin receiving information on ecological research conducted by other agencies. Speakers from several agencies, and some private concerns will provide briefings based on their activities related to these issues.

The meeting will be open to the public. Anyone who wishes to attend, present information to the subcommittee, or obtain information concerning the meeting, should contact Ms. Janis Kurtz, Executive Secretary, or Mrs. Lutithia Barbee, Staff Secretary, (A101-F), Environmental Effects, Transport and Fate Committee, Science Advisory Board, U.S. Environmental Protection Agency, 401 M Street SW., Washington, DC 20460, Telephone (202) 382-2552 or FTS 8-382-2552. Written comments will be accepted, and can be sent to Ms. Kurtz at the address above. Persons interested in making statements before the Subcommittee must contact Ms. Kurtz no later than July 6, 1987 in order to be assured of space on the agenda.

Dated: June 19, 1987

Terry F. Yosie,

Director, Science Advisory Board.

[FR Doc. 87-14460 Filed 6-24-87; 8:45 am]

BILLING CODE 6560-50-M

FEDERAL COMMUNICATIONS COMMISSION

Public Information Collection Requirement Submitted to Office of Management and Budget for Review

The Federal Communications Commission has submitted the following information collection requirement to the Office of Management and Budget for review and clearance under the Paperwork Reduction Act (44 U.S.C. 3501 et seq.).

Copies of the submission may be purchased from the Commission's copy contractor, International Transcription Service, (202) 857-3800, 2100 M Street NW., Suite 140, Washington, DC 20037. For further information on this submission contact Jerry Cowden, Federal Communications Commission, (202) 632-7513. Persons wishing to comment on this information collection should contact J. Timothy Sprehe, Office of Management and Budget, Room 3235 NEOB, Washington, DC 20503, (202) 395-4814.

OMB Number: 3060-0233.

Title: Part 67, Separations.

Action: Revision.

Respondents: Telephone companies.

Frequency of Response: Recordkeeping requirements; Occasional, annual, and one-time reporting requirements.

Estimated Annual Burden: 1,540 Responses; 1,500 Recordkeepers; 1,287,100 Hours.

Needs and Uses: Prescribed separations methods are used by telephone companies to identify investments, expenses, and revenues attributable to interstate or intrastate services in order to enable the Commission and the state public utility commissions to regulate rates for services that are subject to the jurisdiction of a particualr commission. Also, the Commission requires each local telephone company to provide certain information annually to the National Exchange Carrier Association. This information is used in the jurisdictional allocations underlying the cost support data for access charge tariffs filed every October. A telephone company seeking the additional interstate expense adjustment in connection with the Lifeline Connection Assistance Program must file information with the Commission demonstrating its eligibility for the adjustment.

Federal Communications Commission,

William J. Tricarico,

Secretary.

[FR Doc. 87-14452 Filed 6-24-87; 8:45 am]

BILLING CODE 6712-01-M

FEDERAL MARITIME COMMISSION

Agreement(s) Filed

The Federal Maritime Commission hereby gives notice of the filing of the following agreement(s) pursuant to section 5 of the Shipping Act of 1984.

Interested parties may inspect and obtain a copy of each agreement at the Washington, DC Office of the Federal Maritime Commission, 1100 L Street NW., Room 10325. Interested parties may submit comments on each agreement to the Secretary, Federal Maritime Commission, Washington, DC 20573, within 10 days after the date of the **Federal Register** in which this notice appears. The requirements for comments are found in § 572.603 of Title 46 of the Code of Federal Regulations. Interested persons should consult this section before communicating with the Commission regarding a pending agreement.

Agreement No.: 202-006400-025.

Title: Inter-American Freight Conference Pacific Coast Area.

Parties:

Companhia de Navegacao Lloyd Brasileiro

Empresa Lineas Maritimas Argentinas Sociedad Anonima (ELMA S/A)

Nedlloyd Lijnen B.B.

Synopsis:The proposed amendment would provide for independent action on freight forwarder compensation payable to licensed customs brokers in connection with export shipments.

Dated: June 22, 1987.

By Order of the Federal Maritime Commission.

Joseph C. Polking,

Secretary.

[FR Doc. 87-14444 Filed 6-24-87; 8:45 am]

BILLING CODE 6730-01-M

Practices of Ocean Common Carriers Regarding Payment of Inland Divisions; Filing of Petition

June 22, 1987.

Notice is given that a petition has been filed by Bi-State Harbor Carriers Conference of New Jersey Motor Truck Association (Petitioner) requesting the Federal Maritime Commission to institute an investigation and rulemaking proceeding under the Shipping Act of 1916 and the Shipping Act of 1984.

Specifically, Petitioner requests the Commission to investigate the practices and procedures of ocean common carriers serving the Port of New York with respect to the payment of inland divisions to motor carriers participating in intermodal service. Petitioner also requests that the Commission prescribe maximum reasonable time periods within which divisions to the inland motor carrier must be paid by the ocean carrier, and penalty or interest provisions that may be imposed by such motor carrier for nonpayment within the prescribed period.

In order for the Commission to make a thorough evaluation of the petition, interested persons are requested to submit responses to the petition on or before August 10, 1987. Responses shall be directed to the Secretary, Federal Maritime Commission, 1100 L Street, NW., Washington, DC 20573-0001, in an original and 15 copies. Responses shall also be served on counsel for Petitioner, Morton E. Kiel, 475 South Main Street, P.O. Box 489, New City, NY 10956, and shall include an indication that service has been made.

Copies of the petition are available at the Washington, DC, office of the Commission, 1100 L Street, NW., Room 11101.

Joseph C. Polking,

Secretary.

[FR Doc. 87-14427 Filed 6-24-87; 8:45 am]

BILLING CODE 6730-01-M

FEDERAL RESERVE SYSTEM

Formations of, Acquisitions by, and Mergers of Bankholding Companies, Bellbrook Bancorp Inc.; Correction

This notice corrects a previous Federal Register notice (FR Doc. 87-12802) published at page 21374 of the issue for Friday, June 5, 1987.

Under the Federal Reserve Bank of Cleveland, the entry for Bellbrook Bancshares, Inc. is revised to read as follows:

A. Federal Reserve Bank of Cleveland (John J. Wixted, Jr., Vice President) 1455 East Sixth Street, Cleveland, Ohio 44101:

1. *Bellbrook Bancorp, Inc.*, Bellbrook, Ohio; to become a bank holding company by acquiring 100 percent of the voting shares of The Bellbrook Community Bank, Bellbrook, Ohio.

Comments on this application must be received by June 29, 1987.

Board of Governors of the Federal Reserve System, June 19, 1987.

James McAfee,

Associate Secretary of the Board.

[FR Doc. 87-14370 Filed 6-24-87; 8:45 am]

BILLING CODE 6210-01-M

Change in Bank Control Notice; Acquisition of Shares of Banks or Bank Holding Companies

The notificant listed below has applied under the Change in Bank Control Act (12 U.S.C. 1817(j)) and section 225.41 of the Board's Regulation Y (12 CFR 225.41) to acquire a bank or bank holding company. The factors that are considered in acting on notices are set forth in paragraph 7 of the Act (12 U.S.C. 1817(j)(7)).

The notices are available for immediate inspection at the Federal Reserve Bank indicated. Once the notices have been accepted for processing, they will also be available for inspection at the offices of the Board of Governors. Interested persons may express their views in writing to the Reserve Bank indicated for that notice or to the offices of the Board of Governors. Comments must be received not later than July 10, 1987.

A. Federal Reserve Bank of Atlanta (Robert E. Heck, Vice President), 104 Marietta Street NW., Atlanta, Georgia 30303:

1. *Alan E. Johnson*, Jacksonville, Florida; to acquire 39 percent of the voting shares of Bank of St. Petersburg, St. Petersburg, Florida.

Board of Governors of the Federal Reserve System, June 19, 1987.

William W. Wiles,

Secretary of the Board

[FR Doc. 87-14374 Filed 6-24-87; 8:45 am]

BILLING CODE 6210-01-M

Application To Engage de Novo in Permissible Nonbanking Activities; National City Corp. et al.

The company listed in this notice has filed an application under § 225.23(a)(1) of the Board's Regulation Y (12 CFR 225.23(a)(1)) for the Board's approval under section 4(c)(8) of the Bank Holding Company Act (12 U.S.C. 1843(c)(8)) and § 225.21(a) of Regulation Y (12 CFR 225.21(a)) to commence or to engage *de novo*, either directly or through a subsidiary, in a nonbanking activity that is listed in § 225.25 of Regulation Y as closely related to banking and permissible for bank holding companies. Unless otherwise noted, such activities will be conducted throughout the United States.

The application is available for immediate inspection at the Federal Reserve Bank indicated. Once the application has been accepted for processing, it will also be available for inspection at the offices of the Board of Governors. Interested persons may express their views in writing on the question whether consummation of the proposal can "reasonable be expected to produce benefits to the public, such as greater convenience, increased competition, or gains in efficiency, that outweigh possible adverse effects, such as undue concentration of resources, decreased or unfair competition, conflicts of interests, or unsound banking practices." Any request for a hearing on this question must be accompanied by a statement of the reasons a written presentation would not suffice in lieu of a hearing, identifying specifically any questions of fact that are in dispute, summarizing the evidence that would be presented at a hearing, and indicating how the party commenting would be aggrieved by approval of the proposal.

Unless otherwise noted, comments regarding the application must be received at the Reserve Bank indicated or the offices of the Board of Governors not later than July 16, 1987.

A. **Federal Reserve Bank of Cleveland** (John J. Wixted, Jr., Vice President) 1455 East Sixth Street, Cleveland, Ohio 44101:

1. *National City Corporation*, Cleveland, Ohio; to engage *de novo* through its subsidiary, NCC Investment Company, Columbus, Ohio, in securities brokerage activities pursuant to § 225.25(b)(15) of the Board's Regulation Y. These activities will be conducted in the states of Ohio, Michigan, Indiana, West Virginia, Kentucky, Pennsylvania, and Florida.

Board of Governors of the Federal Reserve System, June 19, 1987.

William W. Wiles,

Secretary of the Board.

[FR Doc. 87-14371 Filed 6-24-87; 8:45 am]

BILLING CODE 6210-01-M

Formations of, Acquisitions by, and Mergers of Bank Holding Companies, Newmil Bancorp, Inc., et al.

The companies listed in this notice have applied for the Board's approval under section 3 of the Bank Holding Company Act (12 U.S.C. 1842) and § 225.14 of the Board's Regulation Y (12 CFR 225.14) to become a bank holding company or to acquire a bank or bank holding company. The factors that are considered in acting on the applications are set forth in section 3(c) of the Act (12 U.S.C. 1842(c)).

Each application is available for immediate inspection at the Federal Reserve Bank indicated. Once the application has been accepted for processing, it will also be available for inspection at the offices of the Board of Governors. Interested persons may express their views in writing to the Reserve Bank or to the offices of the Board of Governors. Any comment on an application that requests a hearing must include a statement of why a written presentation would not suffice in lieu of a hearing, identifying specifically any questions of fact that are in dispute and summarizing the evidence that would be presented at a hearing.

Unless otherwise noted, comments regarding each of these applications must be received not later than July 16, 1987.

A. **Federal Reserve Bank of Boston** (Robert M. Brady, Vice President) 600 Atlantic Avenue, Boston, Massachusetts 02106:

1. *NewMil Bancorp, Inc.*, New Milford, Connecticut; to become a bank holding company by acquiring 100 percent of the voting shares of New Milford Savings Bank, New Milford, Connecticut, which engages in Connecticut Savings Bank Life Insurance activities, and thereby indirectly acquire 9.86 percent of the voting shares of Branford Savings Bank, Branford, Connecticut; 6.93 percent of Brooklyn Saving, Bank, Danielson, Connecticut; 5.29 percent of Central Bank for Savings, Meriden, Connecticut; 9.9 percent of City Savings Bank, Meriden, Connecticut; 6.3 percent of Derby Savings Bank, Derby, Connecticut; 9.38 percent of Great Country Bank, Ansonia, Connecticut; 9.99 percent of Peoples Savings Bank of New Britain, New Britain, Connecticut; 9.52 percent of West Newton Savings Bank, West Newton, Massachusetts; 9.99 percent of MidConn Bank, Kensington, Connecticut; and 7.2 percent of West Mass Bankshares, Greenfield, Massachusetts.

B. **Federal Reserve Bank of Chicago** (David S. Epstein, Assistant Vice President) 230 South LaSalle Street, Chicago, Illinois 60690:

1. *Continental Illinois Bancorp, Inc.*, Chicago, Illinois; to acquire 100 percent of the voting shares of Norris Bancorp, Inc., St. Charles, Illinois, and thereby indirectly acquire State Bank of St. Charles, Saint Charles, Illinois, and The First National Bank of Batavia, Batavia, Illinois.

C. **Federal Reserve Bank of Dallas** (W. Arthur Tribble, Vice President) 400 South Akard Street, Dallas, Texas 75222:

1. *Texas Gulf Coast Bancorp, Inc.*, Houston, Texas; to acquire 100 percent of the voting shares of Dickinson State Bank, Dickinson, Texas.

Board of Governors of the Federal Reserve System, June 19, 1987.

William W. Wiles,

Secretary of the Board.

[FR Doc. 87-14372 Filed 6-24-87; 8:45 am]

BILLING CODE 6210-01-M

Formation of, Acquisition by, or Merger of Bank Holding Companies and Acquisition of Nonbanking Company; People's Mutual Holdings

The company listed in this notice has applied under § 225.14 of the Board's Regulation Y (12 CFR 225.14) for the Board's approval under section 3 of the Bank Holding Company Act (12 U.S.C. 1842) to become a bank holding company or to acquire voting securities of a bank or bank holding company. The listed company has also applied under §225.23 of Regulation Y (12 CFR 225.23) for the Board's approval under section 4(c)(8) of the Bank Holding Company Act (12 U.S.C. 1843(c)(8) and § 225.21(a) of Regulation Y (12 CFR 225.21(a)) to acquire or control voting securities or assets of a company engaged in a nonbanking activity that is listed in §225.25 of Regulation Y as closely related to banking and permissible for bank holding companies, or to engage in such an activity. Unless otherwise noted, these activities will be conducted throughout the United States.

The application is available for immediate inspection at the Federal Reserve Bank indicated. Once the application has been accepted for processing, it will also be available for inspection at the offices of the Board of Governors. Interested persons may express their views in writing on the question whether consummation of the proposal can "reasonably be expected to produce benefits to the public, such as greater convenience, increased competition, or gains in efficiency, that outweigh possible adverse effects, such as undue concentration of resources, decreased or unfair competition, conflicts of interests, or unsound banking practices." Any request for a hearing on this question must be accompanied by a statement of the reasons a written presentation would not suffice in lieu of a hearing, identifying specifically any questions of fact that are in dispute, summarizing the evidence that would be presented at a hearing, and indicating how the party commenting would be aggrieved by approval of the proposal.

Comments regarding the application must be received at the Reserve Bank indicated or the offices of the Board of Governors not later than July 17, 1987.

A. **Board of Governors of the Federal Reserve System** (William W. Wiles, Secretary), Washington, D.C. 20551:

1. *People's Mutual Holdings*, Bridgeport, Connecticut to become a bank holding company by acquiring a stock savings bank, People's Bank, Bridgeport, Connecticut, the successor to a mutual savings bank of the same name. Applicant will be operated as a mutual bank holding company.

In connection with this application, Applicant proposes to acquire 33.3% of Cadre, Inc., Avon, Connecticut, and thereby engage in providing data processing services pursuant to §225.25(b)(7) of the Board's Regulation Y; retain ownership of Guardian Federal Savings and Loan Association, Bridgeport, Connecticut, an institution that had been the subject of a supervisory acquisition; to acquire 21.5% of Realtron Corporation, Redford, Michigan and thereby engage in providing on-line computer software and hardware and publishing services to real estate listing boards and agencies; to acquire 7.58% of Prime Capital, L.P., Stamford, Connecticut, a venture capital

limited partnership. Applicant proposes to continue to engage in real estate activities and savings bank life insurance activities solely within People's Bank. This application may be inspected at the Federal Reserve Bank of New York.

Board of Governors of the Federal Reserve System, June 17, 1987.

William W. Wiles,

Secretary of the Board.

[FR Doc. 87-14373 Filed 6-24-87; 8:45 am]

BILLING CODE 6210-01-M

Formation of, Acquisition by, or Merger of Bank Holding Companies; Mountain Bank System, Inc.

The company listed in this notice has applied for the Board's approval under section 3 of the Bank Holding Company Act (12 U.S.C. 1842) and § 225.14 of the Board's Regulation Y (12 CFR 225.24) to become a bank holding company or to acquire a bank or bank holding company. The factors that are considered in acting on the applications are set forth in section 3(c) of the Act (12 U.S.C. 1842(c)).

The application is available for immediate inspection at the Federal Reserve Bank indicated. Once the application has been accepted for processing, it will also be available for inspection at the offices of the Board of Governors. Interested persons may express their views in writing to the Reserve Bank indicated for that application or to the offices of the Board of Governors. Any comment on an application that requests a hearing must include a statement of why a written presentation would not suffice in lieu of a hearing, identifying specifically any questions of fact that are in dispute and summarizing the evidence that would be presented at a hearing.

Comments regarding this application must be received not later than July 2, 1987.

A. **Federal Reserve Bank of Minneapolis** (James M. Lyon, Vice President) 250 Marquette Avenue, Minneapolis, Minnesota 55480:

1. *Mountain Bank System, Inc.*, Whitefish, Montana; to acquire 100 percent of the voting shares of Valley Bank of Belgrade, Belgrade, Montana.

Board of Governors of the Federal Reserve System, June 23, 1987.

James McAfee,

Associate Secretary of the Board.

[FR Doc. 87-14589 Filed 6-24-87; 8:45 am]

BILLING CODE 6210-01-M

DEPARTMENT OF HEALTH AND HUMAN SERVICES

Food and Drug Administration

[Docket No. 87N-0215]

Drug Export; Leucovorin Calcium for Injection 350 mg/vial

AGENCY: Food and Drug Administration.

ACTION: Notice.

SUMMARY: The Food and Drug Administration (FDA) is announcing that Lederle Laboratories has filed an application requesting approval for the export of the human drug Leucovorin Calcium for Injection, 350 mg/vial to Canada.

ADDRESS: Relevant information on this application may be directed to the Dockets Management Branch (HFA-305), Food and Drug Administration, Rm. 4-62, 5600 Fishers Lane, Rockville, MD 20857, and to the contact person identified below. Any future inquiries concerning the export of human drugs under the Drug Export Amendments Act of 1986 should also be directed to the contact person.

FOR FURTHER INFORMATION CONTACT: Rudolf Apodaca, Center for Drugs and Biologics (HFN-310), Food and Drug Administration, 5600 Fishers Lane, Rockville, MD 20857, 301-295-8063.

SUPPLEMENTARY INFORMATION: The Drug Export Amendments Act of 1986 (Pub. L. 99-660) (section 802 of the Federal Food, Drug, and Cosmetic Act (the act) (21 U.S.C. 382)) provides that FDA may approve applications for the export of drugs that are not currently approved in the United States. The approval process is governed by section 802(b) of the act. Section 802(b)(3)(B) of the act sets forth the requirements that must be met in an application for approval. Section 802(b)(3)(C) of the act requires that the agency review the application within 30 days of its filing to determine whether the requirements of section 802(b)(3)(B) have been satisfied. Section 802(b)(3)(A) of the act requires that the agency publish a notice in the **Federal Register** within 10 days of the filing of an application for export to facilitate public participation in its review of the application. To meet this requirement, the agency is providing notice that Lederle Laboratories, a Division of American Cyanamid Company, Pearl River, New York 10965, has filed an application requesting approval for the export of the drug Leucovorian Calcium for Injection, 350 mg/vial to Canada. The drug would be combined with 5-Fw in the treatment of metastatic colorectal cancer. The application was received and filed in the Center for Drugs and Biologics on June 4, 1987, which shall be considered the filing date for purposes of the act.

The agency encourages any person who submits relevant information on the application to do so by July 6, 1987, and to provide an additional copy of the submission directly to the contact person identified above, to facilitate consideration of the information during the 30-day review period.

This notice is issued under the Federal Food, Drug, and Cosmetic Act (sec. 802, Pub. L. 99-660 (21 U.S.C. 382)) and under authority delegated to the Commissioner of Food and Drugs (21 CFR 5.10) and redelegated to the Center for Drugs and Biologics (21 CFR 5.44).

Dated: June 10, 1987.

Daniel L. Michels,

Director, Office of Compliance, Center for Drug and Biologics.

[FR Doc. 87-14387 Filed 6-24-87; 8:45 am]

BILLING CODE 4160-01-M

DEPARTMENT OF HOUSING AND URBAN DEVELOPMENT

[Docket No. N-87-1708]

Submission of Proposed Information Collection to OMB

AGENCY: Office of Administration, HUD.

ACTION: Notice.

SUMMARY: The proposed information collection requirement described below has been submitted to the Office of Management and Budget (OMB) for review, as required by the Paperwork Reduction Act. The Department is soliciting public comments on the subject proposal.

ACTION: Interested persons are invited to submit comments regarding this proposal. Comments should refer to the proposal by name and should be sent to: John Allison, OMB Desk Officer, Office of Management and Budget, New Executive Office Building, Washington, DC 20503.

FOR FURTHER INFORMATION CONTACT: David S. Cristy, Reports Management Officer, Department of Housing and Urban Development, 451 7th Street, SW, Washington, DC 20410, telephone (202) 755-6050. This is not a toll-free number.

SUPPLEMENTARY INFORMATION: The Department has submitted the proposal described below for the collection of information to OMB for review, as required by the Paperwork Reduction Act (44 U.S.C. Chapter 35).

The Notice lists the following information: (1) The title of the

information collection proposal; (2) the office of the agency to collect the information; (3) the description of the need for the information and its proposed use; (4) the agency form number, if applicable; (5) what members of the public will be affected by the proposal; (6) how frequently information submissions will be required; (7) an estimate of the total number of hours needed to prepare the information submission; (8) whether the proposal is new, an extension, reinstatement, or revision of an information collection requirement; and (9) the names and telephone numbers of an agency official familiar with the proposal and of the OMB Desk Officer for the Department.

Copies of the proposed forms and other available documents submitted to OMB may be obtained from David S. Cristy, Reports Management Officer for the Department. His address and telephone number are listed above. Comments regarding the proposal should be sent to the OMB Desk Officer at the address listed above.

The proposed information collection requirement is described as follows:

Notice of Submission of Proposed Information Collection to OMB

Proposal: Description of Materials.

Office: Housing.

Description of the Need for the Information and its Proposed Use: The form is needed so that builders and sponsors can describe the materials and products to be incorporated into construction of the dwelling or other improvements to the property. This form and the attachments define the scope and limits of the construction and are needed by HUD to estimate value for FHA mortgage insurance.

Form Number: HUD-92005.

Respondents: Business or Other For-Profit, Federal Agencies or Employees, and Small Businesses or Organizations.

Frequency of Response: On Occasion.

Estimated Burden Hours: 50,000.

Status: Extension.

Contact: Kenneth L. Crandall, HUD, (202) 755-6700; John Allison, OMB, (202) 395-6880.

Authority: Sec. 3507 of the Paperwork Reduction Act, 44 U.S.C. 3507; Sec. 7(d) of the Department of Housing and Urban Development Act 42 U.S.C. 3535(d).

Dated: June 12, 1987.

John T. Murphy,

Director, Information Policy and Management Division.

[FR Doc. 87-14446 Filed 6-24-87; 8:45 am]

BILLING CODE 4210-01-M

DEPARTMENT OF THE INTERIOR

Bureau of Land Management

[CO-050-4322-02]

Canon City Grazing Advisory Board Meeting

AGENCY: Bureau of Land Management, Interior.

ACTION: Notice of Meeting.

SUMMARY: Notice is hereby given in accordance with the Federal Advisory Committee Act (Pub. L. 463), that the Canon City District Grazing Advisory Board meeting will be held at 10 a.m. Thursday, July 30, 1987, at the office of the Bureau of Land Management, San Luis Resource Area, 1921 State Street, Alamosa, Colorado. There will be a short business meeting the morning of July 30. The purpose of this will be to initiate, conduct, and settle business pertaining to the expenditure of Range Betterment Funds. This meeting will be open to the public. However, facilities and space to accommodate members of the public are extremely limited and persons will be accommodated on a first come, first served basis. Any member of the public may file with the Board a written statement concerning matters to be discussed. Field trips are planned by the Board the afternoon of July 30 and the morning of July 31. Due to lack of transportation facilities members of the public will not be able to accompany the Board on these field trips. Further information concerning the meeting may be obtained from Donnie R. Sparks, District Manager, Bureau of Land Management, 3170 East Main Street, Canon City, Colorado 81212 or telephone at (303) 275-0631. Minutes of the meeting will be made available for public inspection 30 days after the meeting.

Stuart L. Freer,

Assoc. District Manager.

[FR Doc. 87-14394 Filed 6-24-87; 8:45 am]

BILLING CODE 4310-JB-M

[CO-940-87-4111-15; C-33316]

Oil and Gas Leases: Proposed Reinstatement; Colorado

Notice is hereby given that a petition for reinstatement of oil and gas lease C-33316 for lands in Rio Blanco county, Colorado, was timely filed and was accompanied by all the required rentals and royalties accruing from November 1, 1986, the date of termination.

The lessee has agreed to new lease terms for rentals and royalties at rates of $10.00 and 16⅔ percent, respectively.

The lessee has paid the required $500 administrative fee for the lease and has reimbursed the Bureau of Land Management for the estimated cost of this **Federal Register** notice.

Having met all the requirements for reinstatement of the lease as set our in section 31 (d) and (e) of the Mineral Lands Leasing Act of 1920, as amended, (30 U.S.C. 188), the Bureau of Land Management is proposing to reinstate the lease, effective November 1, 1986, subject to the original terms and conditions of the lease and the increased rental and royalty rates cited above.

Questions concerning this notice may be directed to Karen Purvis of the Colorado State Office at (303) 236-1772.

Richard E. Richards,

Supervisor, Oil & Gas/Geothermal Leasing Unit.

[FR Doc 87-14395 Filed 6-24-87; 8:45 am]

BILLING CODE 4310-JB-M

[AZ-020-07-4212-13; A-22796]

Realty Action: Public Land Exchange; Coconino, La Paz, Mohave, Maricopa, Pinal, and Yavapai Counties, AZ

AGENCY: Bureau of Land Management, Interior.

ACTION: Notice of Realty Action.

SUMMARY: The following described lands and interests therein have been determined to be suitable for disposal by exchange under section 206 of the Federal Land Policy and Management Act of 1976, 43 U.S.C. 1716:

Gila and Salt River Meridian

T.30 N., R. 2 W.,
Sec. 33, W½NE¼, SE¼NE¼, NW¼, NE¼SW¼, E½SE¼.
T.29 N., R. 2 W.,
Sec. 3, lot 3, SW¼NE¼;
Sec. 11, SE¼SE¼.
T.27 N., R. 9E.,
Sec.6, lot 11.
T. 23 N., R. 14 W.,
Sec. 36, SW¼NW¼.
T. 21 N., R. 2 W.,
Sec. 6, lots 4-7.
T. 18 N., R. 13 W.,
Sec. 35, E½NE¼.
T. 15 N., R. 9 W.,
Sec. 16, N½N½, SE¼NE¼, SW¼NW¼;
Sec. 19, lots 3 & 4, E½SW¼, SE¼;
Sec. 20, lots 1-4, NE¼, E½W½, SW¼SW¼;
Sec. 21, lots 1, 7-13, E½;
Sec. 27, NE¼, E½NW¼, N½NW¼NW¼, N½S½NW¼NW¼, N½NE¼SW¼, N½N½SE¼;
Sec. 30, lots 1, 5 & 6, N½NE¼, NE¼NW¼.
T. 15 N., R. 8 W.,
Sec. 12, lots 4 & 5;
Sec. 3, lots 5-7, NE¼NW¼, S½NW¼, S½;

Sec. 14, lot 2;
Sec. 22, NE¼NW¼, SW¼NW¼, W½SW¼;
Sec. 27, NE¼NW¼;
Sec. 33, SW¼NW¼.
T. 15 N., R. 7 W.,
Sec. 7, lots 18–22;
Sec. 18, lot 14.
T. 14½ N., R. 8 W.,
Sec. 31, NE¼.
T. 14 N., R. 9 W.,
Sec. 14, SW¼
T. 13 N., R. 9 W.,
Sec. 10, S½;
Sec. 11, W½;
Sec. 12, N½NE¼;
Sec. 14, W½, SE¼;
Sec. 15, all;
Sec. 20, W½NW¼, N½SW¼;
Sec. 22, all;
Sec, 23, all;
Sec. 26, N½NE¼, W½;
Sec. 27, all;
Sec. 35, N½.
T. 13 N., R. 8 W.,
Sec. 7, lot 1, NE¼NW¼, N½NE¼;
Sec. 8, NW¼NW¼;
Sec. 11, NE¼NE¼;
Sec. 12, NE¼NW¼, E½SW¼;
Sec. 27, S½;
Sec. 28, S½;
Sec. 33, all;
Sec. 34, all.
T. 12 N., R. 5 W.,
Sec. 22, lots 1 & 2, SE¼NE¼.
T. 8N., R. 7 W.,
Sec. 1, lots 1–4, S½;
Sec. 3, lots 1–4, S½;
Sec. 10, N½,N½SE¼,SW¼;
Sec. 11, N½,N½S½,SE¼SE¼;
Sec. 12, all;
Sec. 13, all;
Sec. 14, NE¼NE¼, S½NE¼, SE¼,S½SW¼;
Sec. 15, W½SE¼,W½;
Sec. 22, all;
Sec. 23, all;
Sec. 24, all;
Sec. 25, all;
Sec. 26, all;
Sec. 27, all;
Sec. 34, all;
Sec. 35, all;
T. 7 N., R. 6 W.,
Sec. 26, SW¼SW¼;
Sec. 27, SE¼SE¼;
Sec. 34, NE¼, S½, S½NW¼;
Sec. 35, all;
T. 7 N., R. 5 W.,
Sec. 35, NE¼, S½.
T. 6 N., R. 13 W.,
Sec. 27, E½;
Sec. 28, NE¼SE¼, S½SE¼;
Sec. 32, all.
T. 6 N., R. 12 W.,
Sec. 16, NW¼;
Sec. 21, W½SW¼.
T. 6 N., R. 11 W.,
Sec. 8, all;
Sec. 9, SW¼NE¼;
Sec. 10, all;
Sec. 17, all;
T. 5 N., R. 13 W.,
Sec. 5, lots 2–4, SW¼NE¼, S½NW¼;
Sec. 24, N½NW¼, NE¼, N½SE¼, SE¼SE¼, (except patented mining claim);
Sec. 25, E½NE¼NE¼, SW¼NE¼NE¼, W½NW¼NE¼NE¼.
T. 5 N., R. 12 W.,
Sec. 6, lot 2.
T. 5 S., R. 14 E.,
Sec. 25, SE¼SW¼.
T. 6 S., R. 14 E.,
Sec. 4, lot 4;
Sec. 5, lots 1–4, N½S½.
T. 7 S., R. 13 E.,
Sec. 3, S½;
Sec. 4, lots 1–4, S½N½, S½;
Sec. 5, lots 1–4, S½N½, S½;
Sec. 8, W½;
Sec. 17, all;
Sec. 33, all;
T. 7 S., R. 12 E.,
Sec. 14, all.
T. 8 S., R. 12 E.,
Sec. 32, SE¼.
T. 9 S., R. 11 E.,
Sec. 1, S½.

Containing 30,892.02 acres, more or less.

In exchange for these lands, the United States will acquire the following described lands from the State of Arizona:

Gila and Salt River Meridian

T. 14., R. 10W.,
Sec. 5, lots 1–4, S½N½, NW¼SW¼;
Sec. 6, lots 1–7, S½NE¼, SE¼NW¼, E½SW¼, SE¼;
Sec. 7, lots 1–3, N½NE¼, NE¼NW¼, SE¼NE¼, SE¼;
Sec. 23, all;
Sec. 24, S½;
Sec. 31, lots 1–4, E½, E½W½;
Sec. 32, all;
Sec. 33, all;
Sec. 34, all;
Sec. 36, all;
T. 14 N., R. 9 W.,
Sec. 30, lots 1–4, E½, E½W½;
Sec. 31, lots 1–4, E½, E½W½;
Sec. 32, W½, W½SE¼.
T. 13 N., R. 9 W.,
Sec. 5, lots 1–4, S½N½, S½;
Sec. 6, lots 1–7, S½NE¼, SE¼NW¼, E½SW¼, SE¼;
Sec. 7, lots 1–4, E½, E½W½;
Sec. 8, all;
Sec. 31, that portion SWly of Hwy 93.
T. 13 N., R. 10 W.,
Sec. 2, lots 1–5, 7, S½N½, E½SE¼,
Sec. 16, all;
Sec. 32, all;
Sec. 33, all;
Sec. 34, all;
Sec. 35, all.
T. 12 N., R. 10 W.,
Sec. 3, lots 1–4, S½;
Sec. 4, lots 1–4, S½;
Sec. 5, lots 1–4, S½;
Sec. 6, lots 1 & 2, SE¼;
Sec. 10, E½;
Sec. 11, all;
Sec. 12, all;
Sec. 13, all;
Sec. 24, E½;
Sec. 25, E½;
Sec. 34, N½, N½S½, S½SW½, SW¼SE¼;
Sec. 35, all;
Sec. 36, NE¼, S½NW¼, S½.
T. 12 N., R. 9 W.,
Sec. 5, that portion of SW¼ SWly of Hwy 93;
Sec. 6, that portion SWly of Hwy 93;
Sec. 7, lots 1–4, E½, E½W½;
Sec. 8, that portion SWly of Hwy 93;
Sec. 17, all;
Sec. 18, lots 1–4, E½, E½W½;
Sec. 19, lots 1–4, E½,E½W½;
Sec. 20, all;
Sec. 26, that portion SWly of Hwy 93, except patent;
Sec. 29, lots 1–6, NE¼NE¼, W½W½, SE¼SW¼, NE¼SE¼, S½SE¼;
Sec. 30, lots 1–4, E½, E½W½;
Sec. 31, lots 1–4, E½, E½W½;
Sec. 35, that portion SWly of Hwy 93;
Sec. 36, that portion SWly of Hwy 93.
T. 11 N., R. 10 W.,
Sec. 3, lots 1 & 2, S½NE¼.
T. 11 N., R. 9 W.,
Sec. 1, that portion SWly of Hwy 93;
Sec. 11, all;
Sec. 12, all;
Sec. 13, NE¼, NE¼NW¼, S½NW¼, S½;
Sec. 14, all;
Sec. 23, NE¼;
Sec. 24, N½.
T. 11 N., R. 8 W.,
Sec. 6, that portion SWly of Hwy 93;
Sec. 7, that portion of SWly of Hwy 93;
Sec. 8, that portion of SWly of Hwy 93;
Sec. 16, that portion of SW¼ SWly of Hwy 93;
Sec. 17, that portion SWly of Hwy 93;
Sec. 18, lots 1–8;
Sec. 19, lots 1–4;
Sec. 20, N½;
Sec. 21, that portion of NW¼ SWly of Hwy 93.

Containing 32,529.03 acres, more or less.

The public land to be transferred will be subject to the following terms and conditions:

1. Reservations to the United States: (a) Right-of-way for ditches and canals pursuant to the Act of August 30, 1890; and (b) right-of-way for the Department of Energy, Western Area Power Administration (AR–035584).

2. Subject to: (a) Right-of-way to Pinal County Highway Department (A–21400); (b) rights-of-way to El Paso Natural Gas (PHX–078163, PHX–086056); (c) rights-of-way to the Arizona Public Service Company (A–605, A–11565, AR–01112, AR–032475); (d) right-of-way to Francis and Velores Dobmeir (A–16660); (e) right-of-way to American Telephone and Telegraph Company (PHX–083392); (f) right-of-way to Southwest Gas Corporation (AR–022179); (g) rights-of-way to the Arizona State Highway Department (PHX–086484, PHX–086485, AR–013452, A–7332); (h) rights-of-way to the Mountain States Telephone and Telegraph Company (A–16395, A–18558, AR–034625); (i) rights-of-way to the Santa Fe Pacific Railroad Company (PHX–078172, PHX–086792); (j) rights-of-way to the Cyprus Mines Corporation (A–5338, A–3540, A–9006); (k) right-of-way to the Arizona State Department of

Public Safety (A-7332); (l) restrictions that may be imposed by the Coconino, La Paz, Mohave, Maricopa, Pinal, and Yavapai County Boards of Supervisors for floodplain purposes; and (m) other valid existing right.

State lands to be acquired by the United States will be subject to valid existing rights.

The purpose of the exchange includes: (1) Consolidation of both Federal and state lands into more manageable units; (2) acquisition of lands by the Federal agency with important resource values to facilitate management in the wildlife, recreation, cultural, and range programs; (3) transfer of lands with development potential to the state; and (4) disposal of isolated and/or difficult to manage tracts of land.

Publication of this Notice will segregate the subject lands from all apropriations under the public land laws, including the mining laws, but not mineral leasing laws. This segregation will terminate upon the issuance of a deed or patent or 2 years from the date of publication of this Notice in the **Federal Register** or upon publication of a Notice of Termination.

Detailed information concerning this exchange can be obtained from the Kingman Resource Area Office, 2475 Beverly Avenue, Kingman, Arizona 86401. For a period of forty-five (45) days from the date of publication of this Notice in the **Federal Register**, interested parties may submit comments to the District Manager, Phoenix District Office, 2015 West Deer Valley Road, Phoenix, Arizona 85027. Any adverse comments will be evaluated by the State Director who may sustain, vacate, or modify this realty action. In the absence of any objections, this realty action will become the final determination fo the Department of the Interior.

Dated: June 18, 1987.

Henri R. Bisson,

District Manager.

[FR Doc. 87-14397 Filed 6-24-87; 8:45 am]

BILLING CODE 4310-32-M

[AZ-020-07-4212-13; A-22792]

Realty Action: Exchange of Public Lands, Maricopa and Pinal Counties, AZ

The following described federal lands are being considered for disposal by exchange pursuant to section 206 of the Federal Land Policy and Management Act of 1976, 43 U.S.C. 1716:

Gila and Salt River Meridian, Arizona

T. 5 S., R. 4 E.,
Sec. 13, NW¼.
T. 6 S., R. 4 E.,
Sec. 4, lot 15, 16.
T. 5 S., R. 5 E.,
Sec. 13, lot 1-7, SW¼NE¼, S½NW¼, SW¼, W½SE¼;
Sec. 14, lot 1-4, S½N½, S½;
Sec. 15, lot 1-4, S½N½, S½;
Sec. 16, lot 1-4, S½NE¼, N½SE¼, S½NW¼;
Sec. 17, NE¼;
Sec. 21, NE¼, S½;
Sec. 22, lot 1-4, NW¼;
Sec. 23, lot 1-4, S½N½;
Sec. 24, lot 1-5, S½NE¼, SE¼NW¼, SW¼.
T. 5 S., R. 6 E.,
Sec. 17, W½;
Sec. 18, lot 1-5, SE¼NW¼, E½SW¼, SE¼;
Sec. 23, NW¼.
T. 5 N., R. 1 E.,
Sec. 27, W½W½NW¼, S½NE¼NE¼SW¼, W½NE¼SW¼, SE¼NE¼SW¼, W½SW¼, SE¼SW¼;
Sec. 33, N½NE¼;
Sec. 34, E½NE¼NE¼NE¼, E½NW¼NE¼NE¼NE¼, SW¼NW¼NE¼NE¼, SW¼NE¼NE¼NE¼, NW¼NE¼NW¼NE¼NE¼, S½NE¼NW¼NE¼NE¼, W½NW¼NE¼NE¼, SE¼NW¼NE¼NE¼, S½NE¼NE¼, W½NE¼, SE¼NE¼, W½, SE¼.
T. 4 N., R. 1E.,
Sec. 3, lot 1-4, 11-15, 19, 20 S½NE¼, NE¼SE¼.
Comprising 6,602.37 acres.

Final determination on disposal will await completion of an environmental analysis.

In accordance with the regulations of 43 CFR 2201.1 (b), publication of this Notice will segregate the affected public lands from appropriation under the public land laws, including the mining laws, but not the mineral leasing laws or from exchange pursuant to Federal Land Policy and Management Act of 1976.

The segregation of the above-described lands shall terminate upon issuance of a document conveying such lands or upon publication in the **Federal Register** of a notice of termination of the segregation; or the expiration of two years from the date of publication, whichever occurs first.

This Notice shall also serve to terminate, in part, classifications A-20346 M and A-20346 H as to that part of the subject classifications which affect the above listed lands herein being classified.

For a period of forty-five (45 days, interested parties may submit comments to the District Manager, Phoenix District Office, 2015 West Deer Valley Road, Phoenix, Arizona 85027.

Dated: June 18, 1987.

Henri R. Bisson,

District Manager.

[FR Doc. 87-14398 Filed 6-24-87; 8:45 am]

BILLING CODE 4310-32-M

[AZ-050-07-4212-13: A-22308]

Realty Action: Land Exchange with Private Party; Mohave County, AZ.

AGENCY: Bureau of Land Management Interior.

ACTION: Notice of realty action—Land exchange with private party, Mohave County, Arizona.

SUMMARY: The following described lands and interests therein have been determined to be suitable for disposal for exchange under section 206 of the Federal Land Policy and Management Act of 1976, 43 U.S.C. 1716:

Gila and Salt River Meridian, Arizona

T. 14N., R. 10 W.,
Sec. 4, lots 5, 8, and 9
Sec. 9, lots 2, 3, 6, and 7, SW¼NW¼, W½SW¼.
Containing 270 acres, more or less.

In exchange for these lands, the United States will acquire the following described lands from Lake Sections, Incorporated, an Arizona Corporation:

Gila and Salt River Meridian, Arizona

T. 24 N., R. 22 W.,
Sec. 12, all
Sec. 13, all.
Containing 1,280 acres, more or less.

The public land to be transferred will be subject to the following terms and conditions:

1. Reservations to the United States: (a)Right-of-way for ditches and canals pursuant to the Act of August 30, 1890; (b) all the oil and gas in sec. 4 and with it the right to prospect for, mine, and remove same.

2. Subject to: (a) Restrictions that may be imposed by Mohave County Board of Supervisors in accordance with county floodplain regulations established under Resolution No. 84-10 adopted on December 3, 1984; (b) those rights for a telephone line granted to Citizens Utilities Company, by right-of-way No. A-1626; (c) those rights for a telephone line granted to Citizens Utilities Rural Company, Incorporated, by right-of-way No. A-7475; (d) all minerals owned by private party in sec. 4; (e) those rights for transmission lines granted to Citizens Utilities Company, by rights-of-way Nos. A-20874 and PHX-034352; (f) those rights for a road right-of-way granted to the Mohave County Board of Supervisors, No. A-17951; (g) those rights for public highways under R.S. 2477, and to Arizona State Highway Department by right-of-way No. A-4315; (h) the lands in sec. 9 are subject to a reservation of all minerals to Santa Fe Railroad, and (i) those grazing rights conveyed to Havasu Heights Range and

Development Corp. for 2 years from date of this notification.

Private lands to be acquired by the United States will be subject to the following reservations:

A 200-foot public access and scenic easement.

The value of the lands to be exchanged is approximately equal. The acreages will be adjusted or money will be used to equalize the values after the final appraisal is received.

Publication of this Notice will segregate the subject lands from all appropriations under the public land laws, including the mining laws, but not mineral leasing laws. This segregation will terminate upon the issuance of a document conveying such lands, 2 years from the date of this publication, or upon publication of a Notice of Termination.

DATES: For a period of forty-five (45) days from the date of this publication of this Notice in the **Federal Register**, interested parties may submit comments to the District Manager, Yuma District Office, P.O. Box 5680, Yuma, Arizona 85364. Any adverse comments will be evaluated by the State Director who may sustain, vacate, or modify this realty action. In the absence of any objects, this realty action will become the final determination of the Department of the Interior.

FOR FURTHER INFORMATION CONTACT: Mike Ford, Area Manager, Havasu Resource Area, Bureau of Land Management, 3189 Sweetwater Avenue, Lake Havasu City, Arizona 86403, 602-855-8017.

Dated: June 16, 1987.

Robert V. Abbey,

Acting District Manager.

[FR Doc. 87-14399 Filed 6-24-87; 8:45 am]

BILLING CODE 4310-32-M

[AZ-020-07-4212-12; A-22698]

Realty Actions: Exchange of Public Lands, Pinal County, AZ

AGENCY: Bureau of Land Management (BLM), Interior.

Public lands managed by the Phoenix District have been determined to be suitable for disposal by exchange with the state of Arizona as authorized by section 206 of the Federal Land Policy and Management Act of 1976, 43 U.S.C. 1716.

The following described 5,437.62 acres of public land will be exchanged for 11,757.60 acres of state of Arizona land. The exchange will be on an equal value basis as determined by appraisal.

Gila and Salt River Meridian, Arizona

T. 4 S., R. 10 E.,
Sec. 33, SE¼SW¼, SW¼SE¼, E½SE¼.
T. 5 S., R. 10 E.,
Sec 3, lots 1-4, S½N½, S½;
Sec. 4, lots 1-4, S½N½, S½;
Sec. 8, NE¼;
Sec. 9, N½, SE¼;
Sec. 10, W½NE¼, NW¼, S½;
Sec. 14,
Sec. 23, E½, SW¼;
Sec. 26, N½NE¼, SW¼NE¼, NW¼.
T. 9 S., R. 11 E.,
Sec. 1, S½.
T. 7 S., R. 12 E.,
Sec. 14.
T. 5 S., R. 14 E.,
Sec. 25, SE¼SW¼.
T. 6 S., R. 14 E.,
Sec. 5, lots 1-4, N½S½.

Some of the lands involve base floodplains. Excluding lands within the base floodplain from the exchange is not a practicable alternative.

The state lands to be acquired are in Mohave County and legally described as follows.

Gila and Salt River Meridian, Arizona

T. 19 N., R. 14 W.,
Sec. 2, lots 1-4, S½N½, and S½;
Sec. 4, lots 1-4, S½N½, and S½;
Sec. 8;
Sec. 10;
Sec. 12;
Sec. 14;
Sec. 16;
Sec. 20, N½NE¼, SE¼NE¼, NW¼, and NE¼SE¼.
T. 20 N., R. 14 W.,
Sec. 20;
Sec. 22;
Sec. 24;
Sec. 26; NW¼NW¼, S½NW¼, SW¼, NW¼SE¼, and S½SE¼;
Sec. 28;
Sec. 32;
Sec. 34;
Sec. 36;
T. 19 N., R. 15 W.,
Sec. 16.
T. 20 N., R. 15 W.,
Sec. 2, SE¼;
Sec. 12.
T. 21 N., R. 15 W.,
Sec. 36.

The public land will be conveyed subject to the following terms and conditions:

1. A reservation to the United States for rights-of-way for ditches and canals under the Act of August 30, 1890;

2. Subject to: (a) Road rights-of-way A 21386, A 21387, A 21394, A 21395, A 12074 and A 22111; (b) telephone line right-of-way A 7683; (c) transmission line rights-of-way A 8634 and AR 035685; and (d) Pinal County floodplain regulations.

In accordance with the regulations of 43 CFR 2201.1(b), publications of this Notice will segregate the affected public lands from appropriation under the public land laws, including the mining laws, but not the mineral leasing laws or Geothermal Steam Act.

The segregation of the above-described lands shall terminate upon issuance of a document conveying such lands or upon publication in the **Federal Register** of a notice of termination of the segregation; or the expiration of two years from the date of publication, whichever occurs first.

Detailed information concerning this exchange can be obtained from Phoenix District Office. For a period of forty-five (45) days from the date of publication of this Notice in the **Federal Register**, interested parties may submit comments to the District Manager, Phoenix District Office, 2015 W. Deer Valley Road, Phoenix, Arizona 85027. Any adverse comments will be evaluated by the State Director who may sustain, vacate, or modify this realty action. In the absence of any objections, this realty action will become the final determination of the Department of the Interior.

Dated: June 19, 1987.

Henri R. Bisson,

District Manager.

[FR Doc. 87-14396 Filed 6-24-87; 8:45 am]

BILLING CODE 4310-32-M

[ID-040-4212-14-24-10]

Realty Action: I-22491 and I-23768 Noncompetitive Sale of Public Lands in Lemhi County, ID

AGENCY: Bureau of Land Management, Interior.

ACTION: Notice of Realty Action, I-22491 and I-23768 Noncompetitive Sale of Public Lands in Lemhi County, Idaho.

DATE AND ADDRESS: The sale offering wil be held on August 31, 1987, at 10:00 a.m. at the Salmon District Office, Highway 93 South, Box 430, Salmon, Idaho 83467 .

SUMMARY: Based on public supported land use plans the following described land has been examined and identified as suitable for disposal by public sale under section 203 of the Federal Land Policy and Management Act (FLPMA) of 1976 (90 stat. 2750, U.S.C. 1713), at no less than the appraised fair market value.

The below described lands are hereby segregated from appropriation under the public land laws, including the mining laws, as provided by 43 CFR 2711.1-2(d).

Parcel	Legal description	Acres	Sale type
I-22491	T. 19N., R. 21E., B.M., section 27: Lot 9...	.93	Direct
I-23768	T. 17N.,R. 21E., B.M., section 20: Lot 9....	.17	Direct

When patented the lands will be subject to the following reservations:

1. Ditches and Canals (43 U.S.C. 945).

2. Oil and gas on both parcels and geothermal resources on parcel I-23768.

3. All valid and existing rights and reservations of record, including:

a. I-22491 only: Powerline right-of-way I-010865.

b. Both sales will be made subject to the provisions of section 24 of the Federal Power Act, as amended; and parcel I-22491 will also be subject to the condition that in the event the land is required for power purposes, any improvements or structures placed thereon which shall be found to interfere with such development shall be removed or relocated as may be necessary to eliminate interference with power development at no cost to the United States, its permittees, or licensees.

c. Patent to both parcels will contain a restriction which constitutes a covenant running with the land, that the parcel may not be used for placement of hazardous wastes, leach fields, lagoons, dumps, landfills, etc., which could contaminate the Salmon River or other water source.

Sale Procedures

These parcels will be offered by *Direct Sale* to William H. Bishop (I-22491), and Donald G. Peck (I-23768) at the appraised fair market value. These lands have been improved and used by these parties and they are the owners of the adjoining private lands. Disposal by direct sale will legalize their use and protect their investments. The designated bidders will be notified of the final appraised fair market value prior to the date of sale. No other bids or bidders will be considered.

The designated bidders will be required to submit payment of at least thirty (30) percent of the appraised fair market value by cash, certified or cashier's check, bank draft or money order at the above address on August 31, 1987. The balance will be due within 180 days, payable in the same form, and at the same location. Failure to submit the remainder of the payment within 180 days will result in cancellation of the sale offering and forfeiture of the deposit. A bid will also constitute an application for conveyance of the mineral interests of no known value. A $50.00 non-returnable filing fee for processing the mineral conveyance must accompany each bid. If no bid is received from the designated bidders on the sale date, the parcels will then be offered for sale by competitive bidding procedures beginning on September 14, 1987, and continuing until December 14, 1987.

SUPPLEMENTARY INFORMATION: Detailed information concerning these parcels, terms and conditions of the sale, and bidding instructions may be obtained by contacting Stephanie Snook at (208) 756-5400. For a period of 45 days from the date of this notice, interested parties may submit comments regarding the sale to the Salmon District Manager at the above address. Objections will be reviewed by the State Director who may sustain, vacate or modify this realty action. In the absence of any objections, this realty action will become the final determination of the Department of the Interior.

Dated: June 19, 1987.

Jerry W. Goodman,

District Manager.

[FR Doc. 87-14400 Filed 6-24-87; 8:45 am]

BILLING CODE 4310-GG-M

[AZ-050-07-4212-13]

Arizona; Yuma District Resource Management Planning; Resource Management Amendment/Decision Record, Arizona Availability and Public Comment

AGENCY: Bureau of Land Management, Interiors.

ACTION: Notice of availability of the Yuma District Resource Management Plan Amendment, Decision Record and Public Comment Period.

SUMMARY: Pursuant to section 102(2)(c) of the National Environmental Policy Act of 1969, a draft Resource Management Plan (RMP) Amendment/Environmental Assessment (EA) has been prepared for the Yuma District. The proposed amendment modifies the Land Ownership Adjustment section of the Yuma District RMP by adding the statement: This decision is modified to allow approximately 270 acres on the west side of Highway 95 in T. 14 N., R. 20 W., secs. 4 and 9, Gila and Salt River Meridian, to be available for disposal through exchange. This will increase the acreage designated for disposal to 55,760 acres.

Copies of the amendment are available upon request from the Yuma District Office, 3150 Winsor Avenue, Yuma, Arizona 85364, 602-726-6300. The amendment will be available for 30 days from the date of publication in the **Federal Register** for public review. Written comments should be sent by that date to the District Manager at the above address.

FOR FURTHER INFORMATION CONTACT: Mike Ford, Area Manager, Havasu Resource Area, Bureau of Land Management, 3189 Sweetwater Avenue, Lake Havasu City, Arizona 86403, 602-855-8017.

Dated: June 16, 1987.

Robert V. Abbey,

Acting District Manager.

[FR Doc. 87-14393 Filed 6-24-87; 8:45 am]

BILLING CODE 4310-32-M

[CO-940-07-4220-10; C-0123957]

Cancellation of Withdrawal Application; Colorado

June 17, 1987.

AGENCY: Bureau of Land Management, Interior.

ACTION: Notice.

SUMMARY: The Bureau of Reclamation has cancelled their withdrawal application for 320 acres of public land in its entirety. This notice will terminate the segregation imposed by this application and will open the lands to operation of the public land laws, including the U.S. mining laws. The land has been and will remain open to mineral leasing.

EFFECTIVE DATE: June 25, 1987.

FOR FURTHER INFORMATION CONTACT: Doris E. Chelius, BLM Colorado State Office, 2850 Youngfield Street, Lakewood, CO 80215, 303-236-1768.

Withdrawal application C-0123957 is hereby cancelled in its entirety and the segregation imposed on the following described lands by Notice of Proposed Withdrawal published October 8, 1964, 29 FR 13909, 13910 (1964) (FR Doc. 64-10234), as amended, is terminated:

Ute Principal Meridian

T. 2 S., R. 1 E.,

Sec. 4, S½NE¼, SE¼NW¼, E½SW¼NW¼, N½SE¼, SW¼SE¼, NE¼SW¼ and E½NW¼SW¼.

The area described aggregates 320 acres in Mesa County.

Richard D. Tate,

Acting Chief, Branch of Lands and Minerals Operations.

[FR Doc. 87-14401 Filed 6-24-87; 8:45 am]

BILLING CODE 4310-JB-M

[NM-940-07-4220-11; NM NM 52334]

Proposed Continuation of Withdrawals; New Mexico

AGENCY: Bureau of Land Management, Interior.

ACTION: Notice.

SUMMARY: The Department of the Army, Corps of Engineers, proposes that a 2,081.28-acre withdrawal for the National Guard Training Site and Rifle Range, continue for an additional 20 years. The land would remain closed to the public land laws generally including location and entry under the mining laws and would remain open to leasing under the mineral leasing laws.

DATE: Comments should be received by September 23, 1987.

ADDRESS: Comments should be sent to: New Mexico State Director, P.O. Box 1449, Santa Fe, NM 87504-1449.

FOR FURTHER INFORMATION CONTACT: Kay Thomas, BLM, New Mexico State Office, 505-988-6589.

The Department of the Army, Corps of Engineers, proposes that the existing land withdrawal made by Executive Order No. 5255 of December 31, 1929, and Executive Order 7442 of August 31, 1936, be continued for a period of 20 years pursuant to section 204 of the Federal Land Policy and Management Act of 1976, 90 Stat. 2751, 43 U.S.C. 1714. The land is described as follows:

New Mexico Principal Meridian

T. 23 S., R. 10 W.,
Sec. 3, lots 3, 4, S½NW¼, N½SW¼, SE¼SW¼;
Sec. 4, lots 1-4, S½N½, S½;
Sec. 5, lots 1, 2, S½NE¼, SE¼;
Sec. 8, NE¼;
Sec. 9, N½, N½S½;
Sec. 10, E½W½, SW¼NW¼.

The area described contains 2,081.28 acres in Luna County.

The withdrawals are considered essential for protecting the area for tactical and combat training and for weapons qualification. The withdrawals closed the described lands to the public land laws generally, including the mining laws, but not the mineral leasing laws. No change in the segregative effect or use of the land is proposed by this action.

For a period of 90 days from the date of publication of this notice, all persons who wish to submit comments in connection with the proposed withdrawal continuation may present their views in writing to the New Mexico State Director at the address indicated above.

The authorized officer of the Bureau of Land Management will undertake such investigations as are necessary to determine the existing and potential demand for the land and its resources. A report will also be prepared for consideration by the Secretary of the Interior, the President, and Congress, who will determine whether or not the withdrawals will be continued, and if so, for how long. The final determination on the continuation of the withdrawals will be published in the **Federal Register.** The existing withdrawals will continue until such final determination is made.

Dated: June 12, 1987.

Larry L. Woodard,

State Director.

[FR Doc. 87-14402 Filed 6-24-87; 8:45 am]

BILLING CODE 4310-FB-M

[OR-030-7-4322-10-66P7-220]

Vale District Grazing Advisory Board; Field Tour; Oregon

AGENCY: Bureau of Land Management, Interior.

ACTION: Notice of field tour.

SUMMARY: The Vale District Grazing Advisory Board will meet on July 20 and 21, 1987 for a field tour of the Trout Creek Mountain area within the Southern Malheur Resource Area. The purpose of the tour will be to familiarize the Board members with the resource conditions and management problems of this highly visible area. Other discussion items will include the current status of BLM's efforts to develop an allotment management plan for a portion of the Trout Creek area and the Bureau's proposal to divide the 15-Mile Community allotment into smaller more manageable allotments.

DATES: The tour will be held on Monday and Tuesday, July 20 and 21, 1987 beginning at 9:00 A.M. at the Vale District Office.

ADDRESSES: The Vale District Office is located at 100 East Oregon Street, Vale, Oregon 97918.

FOR FURTHER INFORMATION CONTACT: Bill Weigand, Southern Malheur Resource Area Manager, Vale District Office (503) 473-3144.

David Lodzinski,

Acting District Manager.

[FR Doc. 87-14472 Filed 6-24-87; 8:45 am]

BILLING CODE 4310-33-M

[AZ-940-87-4220-10; A-22695]

Proposed Withdrawal and Reservation of Lands; Opportunity for Public Meeting; Arizona

June 17, 1987.

AGENCY: Bureau of Land Management, Interior.

ACTION: Notice.

SUMMARY: The U.S. Department of Agriculture (USDA), Forest Service, has filed application for withdrawal of 3,001.81 acres of land from location and entry under the United States mining laws to allow the establishment of a land exchange program within the Town of Payson. The areas proposed for withdrawal are within the boundaries of the Tonto National Forest.

ADDRESS: Comments should be sent to Chief, Branch of Lands and Minerals Operations, Bureau of Land Management, Arizona State Office, P.O. Box 16563, Phoenix, Arizona 85011.

FOR FURTHER INFORMATION CONTACT: Lisa Schaalman, Arizona State Office; (602) 241-5534.

SUPPLEMENTARY INFORMATION:

On May 26, 1987, the Forest Service filed an application to withdraw the following land from location and entry under the mining laws only, subject to valid existing rights, pursuant to the authority vested in the Secretary of the Interior by section 204 of the Federal Land Policy and Management Act of 1976, 90 Stat 2751; 43 U.S.C. 1714 (1982).

Tonto National Forest

Gila and Salt River Meridian, Arizona

T. 10 N., R. 10 E.,
Sec. 2, lot 1, SE¼NE¼, NE¼SE¼;
Sec. 4, SW¼NE¼SW¼, S½NW¼SW¼;
Sec. 5, lots 2, 3, 4, 7, NE½SW¼NE¼, S½NW¼, N½NW¼SW¼, SW¼NW¼SW¼;
Sec. 6, lots 1, 2, S½NE¼, N½SE¼, S½S½S½SE¼, N½SW¼SE¼SE¼, MW¼SE¼SE¼SE¼;
Sec. 7, NE¼;
Sec. 8, SW¼NE¼NW¼, NW¼NW¼NW¼, S½NW¼NW¼, SW¼NW¼, W½SE¼NW¼, N½SE¼;
Sec. 9, lots 4, 6, E½SW¼NW¼, S½NW¼SE¼NW¼, SW¼SE¼NW¼, W½E½SW¼, W½SW¼, SE¼SE¼SW¼;
Sec. 10, N½SW¼.
T. 11 N., R. 10 E.,
Sec. 26, E½SE¼SW¼, W½SW¼SE¼;
Sec. 27, N½SE¼;
Sec. 28, lots 1-4, incl., lots 6-9, incl., S½SW¼;
Sec. 31, lots 1, 5, 6, 11, 12, NW¼NE¼;
Sec. 32, lots 1-4, incl., lots 8-17, incl., NW¼NE¼;
Sec. 33, lots 7-13, incl.;

Sec. 35, NE¼, E½NW¼, E½NW¼NW¼, NE¼SW¼NW¼, S½NW¼SW¼NW¼, N½NE¼SW¼, N½SE¼;
Tracts 38, 39, 40.

The areas described aggregates 3,001.81 acres in Gila County.

All of the land is classified for conveyance under USDA Forest Service authorities in accord with a program agreed to and initiated in 1977 and in conformance with the Final Environmental Impact Statement for the approved Tonto Forest Plan. The purpose of the withdrawal is to close the land to location and entry under the General Mining Laws to protect the value of the land within the boundaries of the Town of Payson for eventual transfer into private or local government ownership for town-associated development.

For a period of 90 days, from the date of publication of this notice, all persons who wish to submit comments, suggestions, or objections in connection with the proposed withdrawal may present their views in writing to the undersigned office of the Bureau of Land Management.

Notice is hereby given that an opportunity for a public meeting is afforded in connection with the proposed withdrawal. All interested persons who desire a public meeting for the purpose of being heard on the proposed withdrawal must submit a written request to the undersigned office within 90 days from the date of publication of this notice. Upon a determination that a public meeting will be held, a notice of the time and place will be published in the **Federal Register** at least 30 days before the scheduled date of the meeting.

The application will be processed in accordance with the regulations set forth in Title 43 CFR Part 2300.

The publication of this notice in the **Federal Register** shall segregate the land described above to the extent that they shall not be subject to appropriation under the general mining laws for a period of two years from the date of publication in the **Federal Register.** The land remains open to mineral leasing and to those laws governing management and disposition of National Forest land by the USDA Forest Service, including exchange, sale, lease, easement, permit and management, utilization and disposal of mineral or vegetative resources, other than under the general mining laws.

John T. Mezes,

Chief, Branch of Lands and Minerals Operations.

[FR Doc. 87-14473 Filed 6-24-87; 8:45 am]

BILLING CODE 4310-32-M

Fish and Wildlife Service

Receipt of Application for Marine Mammal Permit; Application

The public is invited to comment on the following application for permits to conduct certain activities with marine mammals. The application was submitted to satisfy requirements of the Marine Mammal Protection Act of 1972, *as amended* (16 U.S.C. 1361 *et seq.*, the Endangered Species Act of 1973, *as amended* (16 U.S.C. 1531, *et seq.*) and the regulations governing marine mammals and endangered species (50 CFR Part 17 and 18).

File No. PRT-719453

Applicant Name: Director, California Department of Fish & Game, Sacramento, California.

Type of Permit: Scientific Research.

Name of Animals: Southern sea otter, (*Enhydra lutris nereis*).

Summary of Activity to be Authorized: The applicant proposes to take these animals to conduct research aiding the management efforts authorized by an Act to Improve Fish and Wildlife Management, Pub. L. 99-625. Research would improve understanding and technology of methods to influence sea otter movements and distribution with non-lethal means. First phase would require capture of 20 sea otters from the southern end of their range and from extralimital areas south of the present California range. Release would occur on the northern end of their range and be designed to determine factors influencing return to their point of capture. Second phase would involve capture and removal of all sea otters entering experimentally-established no otter zone bounded by Points Arguello and Conception. This phase is expected not to exceed 50 captures per year for 3 years with release location being the same as was used in the first phase. The third phase would involve non-lethal reduction in density in the experimental area to determine factors influencing movements and range expansion, to be amended based on results of the earlier phases of research. In the first phase only non-pregnant, independent otters without pups will be captured and relocated. Each captured, relocated animal would be Temple, Monel and transponder tagged and moved in standard cages and air conditioned vans.

Source of Marine Mammals for Research: Captures will occur from Point San Luis to Santa Maria River, California, during the first phase, as well as south of the existing range. Second phase captures will be between Point Arguello and Point Conception, California. Release site for both phases will be near Soquel Point, California.

Period of Activity: January 1, 1988 through December 31, 1988 (first phase) with second phase beginning after natural range expansion approximately 30 miles south to Point Arguello (expected to be January 1, 1989 through December 31, 1991). Third phase to be determined with amendment or renewal request.

Concurrent with the publication of this notice in the **Federal Register**, the Federal Wildlife Permit Office is forwarding copies of this application to the Marine Mammal Commission and the Committee of Scientific Advisors for their review.

Written data or comments, requests for copies of the complete application, or requests for a public hearing on this application should be submitted to the Director, U.S. Fish and Wildlife Service (FWPO), 1000 North Glebe Road, Room 611, Arlington, Virginia 22201, within 30 days of the publication of this notice. Anyone requesting a hearing should give specific reasons why a hearing would be appropriate. The holding of such hearing is at the discretion of the Director.

Documents submitted in connection with the above application(s) are available for review during normal business hours (7:45 am to 4:15 pm) in Room 601 N. Glebe Road, Arlington, Virginia.

Dated: June 22, 1987.

R.K. Robinson,

Chief, Branch of Permits, Federal Wildlife Permit Office.

[FR Doc. 87-14469 Filed 6-24-87; 8:45 am]

BILLING CODE 4310-55-M

Minerals Management Service

Outer Continental Shelf Advisory Board, Gulf of Mexico Regional Technical Working Group; Meeting

Notice of this meeting is issued in accordance with the Federal Advisory Committee Act (Pub. L. No. 92-463).

Name: Gulf of Mexico Regional Technical Working Group

Date: July 29-30, 1987

Place: Days Inn, I-65—Airport, 3650 Airport Boulevard, Mobile, Alabama

Time:

July 29, 1987—9:00 a.m. to 3:30 p.m.
July 30, 1987—9:00 a.m. to 5:00 p.m.

The Regional Technical Working Group (RTWG) membership consists of representatives from Federal Agencies, the coastal States of Alabama, Florida, Louisiana, Mississippi, and Texas, the

petroleum industry, and other private interests. The Gulf of Mexico RTWG is one of six such Committees that advises the Director of the Minerals Management Service on technical matters of regional concern regarding offshore prelease and postlease sale activities.

The agenda of the meeting is as follows:

Wednesday, July 29, 1987

9:00 a.m.—Welcome/Introductions, Gulf of Mexico Current Activities
10:00 a.m.—1989 Call for Information and Notice of Intent Status Report
10:30 a.m.—BREAK
10:45 a.m.—Legislative Update
11:00 a.m.—Status of Environmental Studies Program
11:20 a.m.—Lease Stipulations concerning Central Gulf of Mexico
11:40 a.m.—Lease Stipulations concerning Eastern Gulf of Mexico
12:00 noon—LUNCH
1:30 p.m.—Status of Studies on Explosives and Turtles
2:15 p.m.—Shrimper's Concern with Site Clean-up after removal
3:00 p.m.—Discussion of Agenda Topics for Next Meeting
3:15 p.m.—Public Comment
3:30 p.m.—Adjourn

Thursday, July 30, 1987

9:00 a.m.—Summer Ternary Studies Session
5:00 p.m.—Adjourn

This meeting is open to the public. Individuals wishing to make oral presentations to the Committee concerning agenda items should contact Eileen P. Angelico of the Gulf of Mexico OCS Regional Office at (504) 736-2959 by July 24, 1987. Written statements should be submitted by the same date to the Gulf of Mexico OCS Region, Minerals Management Service 1201 Elmwood Park Boulevard, New Orleans, Louisiana 70123. A taped cassette transcript and complete summary minutes of the Business Meeting will be available for public inspection in the Office of the Regional Director at the above address not later than 60 days after the meeting.

Dated: June 19, 1987.

J. Rogers Pearcy,

Regional Director, Gulf of Mexico OCS Region, Minerals Management Service.

[FR Doc. 87-14405 Filed 6-24-87; 8:45 am]

BILLING CODE 4310-MR-M

Development Operations Coordination Document; Diamond Shamrock Offshore Partners Ltd. Partnership

AGENCY: Minerals Management Service, Interior.

ACTION: Notice of the receipt of a proposed Development Operations Coordination Document (DOCD).

SUMMARY: Notice is hereby given that Diamond Shamrock Offshore Partners Limited Partnership has submitted a DOCD describing the activities it proposes to conduct on Lease OCS-G 5286, Block 178, West Cameron Area, offshore Louisiana. Proposed plans for the above area provide for the development and production of hydrocarbons with support activities to be conducted from onshore bases located at Cameron and Intracoastal City, Louisiana.

DATE: The subject DOCD was deemed submitted on June 17, 1987.

ADDRESS: A copy of the subject DOCD is available for public review at the Public Information Office, Gulf of Mexico OCS Region, Minerals Managment Service, 1201 Elmwood Park Boulevard, Room 114, New Orleans, Louisiana (Office Hours: 8 a.m. to 4:30 p.m., Monday through Friday).

FOR FURTHER INFORMATION CONTACT: Michael J. Tolbert; Minerals Management Service, Gulf of Mexico OSC Region, Field Operations, Plans, Platform and Pipeline Section, Exploration/Development Plans Unit; Telephone (504) 736-2867.

SUPPLEMENTARY INFORMATION: The purpose of this Notice is to inform the public, pursuant to section 25 of the OCS Lands Act Amendments of 1978, that the Minerals Management Service is considering approval of the DOCD and that it is available for public review.

Revised rules governing practices and procedures under which the Minerals Management Service makes information contained in DOCDs available to affected States, executives of affected local governments, and other interested parties became effective December 13, 1979 (44 FR 53685). Those practices and procedures are set out in revised § 250.34 of Title 30 of the CFR.

Dated: June 18, 1987.

J. Rogers Pearcy,

Regional Director, Gulf of Mexico OCS Region.

[FR Doc. 87-14406 Filed 6-24-87; 8:45 am]

BILLING CODE 4310-MR-M

Development Operations Coordination Document; Kerr-McGee Corp.

AGENCY: Minerals Management Service, Interior.

ACTION: Notice of the receipt of a proposed Development Operations Coordination Document (DOCD).

SUMMARY: Notice is hereby given that Kerr-McGee Corporation, Unit Operator of the Ship Shoal Block 32 Federal Unit Agreement No. 14-08-001-2891, has submitted a DOCD describing the activities it proposes to conduct on the Ship Shoal Block 32 Federal unit. Proposed plans for the above area provide for the development and production of hydrocarbons with support activities to be conducted from an onshore base located at Morgan City, Louisiana.

DATE: The subject DOCD was deemed submitted on June 12, 1987.

ADDRESS: A copy of the subject DOCD is available for public review at the Public Information Office, Gulf of Mexico OCS Region, Minerals Management Service, 1201 Elmwood Park Boulevard, Room 114, New Orleans, Louisiana (Office Hours: 8: a.m. to 4:30 p.m., Monday through Friday).

FOR FURTHER INFORMATION CONTACT: Mr. Stephen T. Dessauer; Minerals Management Service; Gulf of Mexico OCS Region; Production and Development; Development and Unitization Section; Unitization Unit; Telephone (504) 736-2660.

SUPPLEMENTARY INFORMATION: The purpose of this Notice is to inform the public pursuant to section 25 of the OCS Lands Act Amendments of 1978, that the Minerals Management Service is considering approval of the DOCD and that it is available for public view.

Revised rules governing practices and procedures under which the Minerals Management Service makes information contained in DOCDs available to affected States, executives of affected local governments, and other interested parties became effective December 13, 1979 (44 FR 53685). Those practices and procedures are set out in revised § 250.34 of Title 30 of the CFR.

Dated: June 16, 1987.

J. Rogers Pearcy,

Regional Director, Gulf of Mexico OCS Region.

[FR Doc. 87-14407 Filed 6-24-87; 8:45 am]

BILLING CODE 4310-MR-M

Development Operations Coordination Document; Minatome Corp.

AGENCY: Minerals Management Service, Interior.

ACTION: Notice of the receipt of a proposed development operations coordination document (DOCD).

SUMMARY: Notice is hereby given that Minatome Corporation has submitted a DOCD describing the activities it proposes to conduct on Lease OCS-G 1178, Block 7, South Marsh Area, offshore Louisiana. Proposed plans for the above area provide the development and production of hydrocarbons with support activities to be conducted from an onshore base located at Intracoastal City, Louisiana.

DATE: The subject DOCD was deemed submitted on June 18, 1987. Comments must be received within 15 days of the date of this Notice or 15 days after the Coastal Management Section receives a copy of the plan from the Minerals Management Service.

ADDRESSES: A copy of the subject DOCD is available for public review at the Public Information Office, Gulf of Mexico OCS Region, Minerals Management Service, 1201 Elmwood Park Boulevard, Room 114, New Orleans, Louisiana (Office Hours: 8 a.m. to 4:30 p.m., Monday through Friday). A copy of the DOCD and the accompanying Consistency Certification are also available for public review at the Coastal Management Section Office located on the 10th Floor of the State Lands and Natural Resources Building, 625 North 4th Street, Baton Rouge, Louisiana (Office Hours: 8 a.m. to 4:30 p.m., Monday through Friday). The public may submit comments to the Coastal Management Section, Attention OCS Plans, Post Office Box 44487, Baton Rouge, Louisiana 70805.

FOR FURTHER INFORMATION CONTACT: Michael J. Tolbert; Minerals Management Service, Gulf of Mexico OCS Region, Field Operations, Plans, Platform and Pipeline Section, Exploration/Development Plans Unit; Telephone (504) 736-2867.

SUPPLEMENTARY INFORMATION: The purpose of this Notice is to inform the public, pursuant to section 25 of the OCS Lands Act Amendments of 1978, that the Minerals Management Service is considering approval of the DOCD and that it is available for public review. Additionally, this Notice is to inform the public, pursuant to § 930.61 of Title 15 of the CFR, that the Coastal Management Section/Louisiana Department of Natural Resources is reviewing the DOCD for consistency with the Louisiana Coastal Resources Program.

Revised rules governing practices and procedures under which the Minerals Management Service makes information contained in DOCDs available to affected States, executives of affected local governments, and other interested parties became effective December 13, 1979 (44 FR 53685).

Those practices and procedures are set out in revised § 250.34 of Title 30 of the CFR.

Dated: June 19, 1987.

J. Rogers Pearcy,

Regional Director, Gulf of Mexico OCS Region.

[FR Doc. 87-14474 Filed 6-24-87; 8:45 am]

BILLING CODE 4310-MR-M

INTERNATIONAL DEVELOPMENT COOPERATION AGENCY

Agency for International Development

Housing Guaranty Program; Investment Opportunities; Honduras

The Agency for International Development (A.I.D.) has authorized the guaranty of a loan to Honduras as part of A.I.D.'s overall development assistance program. The proceeds of this loan will be used to finance shelter projects for low income families in Honduras. The name and address of the representative of the Borrower to be contacted by interested U.S. lenders or investment bankers, the amount of the loan and project number are indicated below:

Honduras

Project: 522-HG-008—$25,000,000, Attention: J. Efrain Bu Giron, Ministro de Hacienda y Credito Publico, Tegucigalpa D.C., Honduras, Central America, Telephone: 22-1278, 22-8701, Telex: 1308 Hacienda HO

Interested investors should telegram their bids to the Borrower's representative on July 8, 1987, but no later than 5:30 p.m. Eastern Daylight Savings Time. Bids should be open at least 24 hours. Copies of all bids should be simultaneously sent to the following addresses:

Mrs. Blanca Lizzeth Rivera de Paz, Vice Minister de Credito Publico y Administracion, Tegucigalpa D.C., Honduras, Central America, Telephone: 22-7265, Telex: 1308 Hacienda HO

Mrs. Cristiana de Figueroa, Asesoria Tecnica, Ministerio de Hacienda y Credito Publico, Tegucigalpa D.C., Honduras, Central America, Telephone: 22-6433 or 22-8004, Telex: 1308 Hacienda HO

Mr. Mario Galeano Burgos, Economic Counselor, Embassy of Honduras, 4301 Connecticut Avenue, NW., Washington, DC 20008, Telephone: 202/966-7700, Telex: 197689 EHWC UT

Mrs. Lee D. Roussel, Assistant Director/ Central America, RHUDO/ Tegucigalpa, USAID/Tegucigalpa, APO Miami 34022, Telephone: (504) 32-3120, Telex: 1593 USAID HO

Agency for International Development, Michael G. Kitay, Herbert T. McDevitt, PRE/H, Room 3208 N.S., Washington, DC 20523, Telex No.: 892703 AID WSA, Telefax No. 202/ 647-1805 (preferred communication)

For the $25,000,000 loan the Borrower is requesting and will consider the following requirements for responsive bids:

1. *Interest rate:* Fixed with prepayment at borrower's option after twenty years or after ten years if pricing is not materially affected.

2. *Term:* The loan shall be for up to a thirty (30) year period.

3. *Grace Period:* There will be a ten (10) year grace period on the repayment of principal which will amortize gradually over remaining life of loan.

4. *Disbursement:* Full amount of loan will be disbursed at same time of closing of loan period.

5. *Loan Costs:* All investment expenses, fees and costs will be paid at closing from the proceeds of the loan.

Selection of investment bankers and/ or lenders and the terms of the loan are initially subject to the individual discretion of the Borrower and thereafter subject to approval by A.I.D. The lender and A.I.D. shall enter into a Contract of Guaranty, covering the loan. Disbursements under the loan will be subject to certain conditions required of the Borrower by A.I.D. as set forth in agreements between A.I.D. and the Borrower.

The full repayment of the loan will be guaranteed by A.I.D. The A.I.D. guaranty will be backed by the full faith and credit of the United States of America and will be issued pursuant to authority in section 222 of the Foreign Assistance Act of 1961, as amended (the "Act").

Lenders eligible to receive an A.I.D. guaranty are those specified in Section 238(c) of the Act. They are: (a) U.S. citizens; (2) domestic U.S. corporations, partnerships, or associations substantially beneficially owned by U.S. citizens; (3) foreign corporations whose share capital is at least 95 percent owned by U.S. citizens; and, (4) foreign

partnerships or associations wholly owned by U.S. citizens.

To be eligible for an A.I.D. guaranty, the loan must be repayable in full no later than the thirtieth anniversary of the disbursement of the principal amount thereof. The maximum rate of interest shall be a rate which in A.I.D.'s opinion is similar to current borrowing rates for Housing and Urban Development housing mortgage loans.

Information as to the eligibility of investors and other aspects of the A.I.D. housing guaranty program can be obtained from:

Peter M. Kimm, Director, Office of Housing and Urban Programs, Agency for International Development, Room 6212 N.S., Washington, DC 20523, Telephone: 202/647-9082

Dated: June 22, 1987.

Paul G. Vitale,

Acting Deputy Director, Office of Housing and Urban Programs.

[FR Doc. 87-14479 Filed 6-24-87; 8:45 am]

BILLING CODE 6116-01-M

INTERSTATE COMMERCE COMMISSION

Forms Under Review by Office of Management and Budget

The following proposal for collection of information under the provisions of the Paperwork Reduction Act (44 U.S.C. Chapter 35) is being submitted to the Office of Management and Budget for review and approval. Copies of the forms and supporting documents may be obtained from the Agency Clearance Officer, Ray Houser (202) 275-6723. Comments regarding this information collection should be addressed to Ray Houser, Interstate Commerce Commission, Room 1325, 12th and Constitution Ave., NW., Washington, DC 20423 and to Gary Waxman, Office of Management and Budget, Room 3228 NEOB, Washington, DC 20503, (202) 395-7340.

Type of Clearance: Extension.

Bureau/Office: Office of Proceedings.

Title of Form: Application for approval under 49 U.S.C. 11349, of the temporary authority of motor carrier properties sought to be acquired under separately filed applications and petitions for exemption under 49 U.S.C. 11343, 11344 or of transfers of motor carrier certificates and permits under 49 U.S.C. 10926.

OMB Form No.: 3120-0079.

Agency Form No.: OP-F-46.

Frequency: Non-reoccurring.

Respondents: Motor carriers proposing transactions under 49 U.S.C. 11349.

No. of Respondents: 300.

Total Burden Hrs.: 7,500.

Brief Description of the need and proposed use: This form is used by applicants seeking approval for the temporary lease, operation or management control of motor carrier properties sought to be acquired. The information is used to evaluate whether there is urgency in the transaction requiring immediate action by the Commission without public notice and the opportunity for an adversarial proceeding.

Noreta R. McGee,

Secretary.

[FR Doc. 87-14388 Filed 6-24-87; 8:45 am]

BILLING CODE 7035-01-M

[Docket No. AB-55; Sub-No. 205X]

Railroad Services Abandonment; CSX Transportation, Inc.; Exemption, Abandonment in Gibson County, IN

Applicant has filed a notice of exemption under 49 CFR 12152 Subpart F—*Exempt Abandonments* to abandon its 5.6-mile line of railroad between milepost ZJ-265.4 at Mt. Vernon Junction and milepost ZJ-271.0 at Owensville, both located in Gibson County, IN. The Railway Labor Executives' Association and the United Transportation Union seek imposition of labor protective conditions.

Applicant has certified (1) that no local traffic has moved over the line for at least 2 years and that overhead traffic has been rerouted, and (2) that no formal complaint filed by a user of rail service on the line (or by a State or local governmental entity acting on behalf of such user) regarding cessation of service over the line either is pending with the Commission or any U.S. District Court, or has been decided in favor of the complainant within the 2-year period. The appropriate State agency has been notified in writing at least 10 days perior to the filing or this notice.

Applicant has filed an environmental report which shows that no significant environmental or energy impacts are likely to result from this abandonment.

As a condition to use of this exemption, any employee affected by the abandoment shall be protected pursuant to *Oregon Short Line R. Co.—Abandonment—Goshen*, 360 I.C.C. 91 (1979).[1]

[1] The Railway Labor Executives' Association and the United Transportation Union filed a request for labor protection. Since this transaction involves an exemption from 49 U.S.C. 10903, whereby the imposition of labor protective conditions is mandatory, those conditions have been routinely imposed.

The exemption will be effective 30 days from service of this decision (unless stayed pending reconsideration). Petitions to stay must be filed by [10 days after service], and petitions for reconsideration, including environmental, energy and public use concerns, must be filed by [20 days after service] with: Office of the Secretary, Case Control Branch, Interstate Commerce Commission, Washington, DC 20423.

A copy of any petition filed with the Commission should be sent to applicant's representative: Charles M. Rosenberger, 500 Water Street, Jacksonville, FL 32202.

If the notice of exemption contains false or misleading information, use of the exemption is void *ab initio*.

A notice to the parties will be issued if use of the exemption is conditioned upon environmental or public use conditions.

Decided: June 18, 1987.

By the Commission, Jane F. Mackall, Director Office of Proceedings.

Noreta R. McGee,

Secretary.

[FR Doc. 87-14390 Filed 6-24-87; 8:45 am]

BILLING CODE 7035-01-M

DEPARTMENT OF JUSTICE

Lodging of Consent Decree Pursuant to Clean Water Act; American Nickeloid Co.

In accordance with Department policy, 28 CFR 50.7, notice is hereby given that on June 11, 1987, a proposed consent decree in *United States v. American Nickeloid Company*, Civ. No. 85-C-08545, was lodged with the United States District Court for the Northern District of Illinois. This agreement resolves a judicial enforcement action brought by the United States against American Nickeloid Company for violations of the Clean Water Act at its manufacturing plant in Peru, Illinois.

The proposed consent decree requires American Nickeloid to properly operate its wastewater treatment and filtration system; to install a clarifier for treatment of non-cyanide bearing wastewaters; to install storage tanks, a chemical treatment tank, and a surge tank to handle additional wastewaters produced by the facility; and to develop a plan for the proper operation and maintenance of its pollution control equipment. American Nickeloid is also required to close the storage and drying lagoons at the facility in accordance with a plan approved by the State of Illinois. The Company must also comply

with all the discharge limitations of its NPDES permit. The Decree establishes monitoring and reporting requirements and imposes stipulated penalties of up to $15,000 per day for violations of its provisions. American Nickeloid must also pay a civil penalty of $137,500 for its violations of the Clean Water Act.

The Department of Justice will receive for a period of thirty (30) days from the date of this publication, comments relating to the proposed consent decree. Comments should be addressed to the Assistant Attorney General of the Land and Natural Resources Division, Department of Justice, Washington, DC 20530, and should refer to *United States v. American Nickeloid Company*, D.J. Ref. 90-5-1-1-2458.

The proposed consent decree may be examined at the office of the United States Attorney or the regional office of the Environmental Protection Agency as follows:

U.S. Attorney, Northern District of Illinois, Civil Division, 219 South Dearborn Street, Chicago, Illinois 60604

Office of Regional Counsel, U.S. Environmental Protection Agency, Region V, 230 South Dearborn Street, Chicago, Illinois 60604.

A copy of the consent decree may be examined at the Environmental Enforcement Section, Land and Natural Resources Division of the Department of Justice, Room 1515, Nineth Street and Pennsylvania Avenue, NE., Washington, DC 20530. A copy of the proposed consent decree may be obtained by mail from the Environmental Enforcement Section, Land and Natural Resources Division of the Department of Justice.

F. Henry Habicht II,

Assistant Attorney General, Land and Natural Resources Division.

[FR Doc. 87-14408 Filed 6-24-87; 8:45 am]

BILLING CODE 4410-01-M

Lodging of Consent Decree Pursuant to Clean Water Act and Toxic Substances Control Act; City of Gary, IN

In accordance with Deaprtment policy, 28 CFR 50.7, notice is hereby given that on June 10, 1987 a proposed consent decree and Stipulated Order in *United States v. City of Gary*, Civil Action Nos. H 78-29 and H-860540 was lodged with the United States District Court for the Northern District of Indiana. The proposed consent decree and stipulated order concern violations of the Clean Water Act as a result of defendants' operation of the municipal sewer system, and of the Toxic Substances Control Act as a result of the presence of polychlorinated biphenyls in the Ralston Street Lagoon. The proposed consent decree requires defendants to improve their processing and treatment of sludge. Defendants are also required to prepare, and implement a remedy to deal with PCB contamination of the Ralston Street Lagoon. The consent decree imposes a penalty of $1,000,000.00 which is suspended if defendants comply with the other terms of the decree.

The Department of Justice will receive for a period of thirty (30) days from the date of this publication comments relating to the proposed consent decree. Comments should be addressed to the Assistant Attorney General of the Land and Natural Resources Division, Department of Justice, Washington, DC 20530, and should refer to *United States v. City of Gary*, D.J. Ref. 90-5-1-1-860A.

The proposed consent decree may be examined at the office of the United States Attorney, Northern District of Indiana, Federal Building, 507 State Street, Hammond, Indiana 46320 and at the Region V Office of the Environmental Protection Agency, 230 South Dearborn Street, Chicago, Illinois 60604. Copies of the consent decree may be examined at the Environmental Enforcement Section, Land and Natural Resources Division of the Department of Justice, Room 1517, Ninth Street and Pennsylvania Avenue, NW., Washington, DC 20530. A copy of the proposed consent decree and stipulated order may be obtained in person or by mail from the Environmental Enforcement Section, Land and Natural Resources Division of the Department of Justice. In requesting a copy, please enclose a check in the amount of $3.20 (10 cents per page reproduction cost) payable to the Treasurer of the United States.

F. Henry Habicht II,

Assistant Attorney General, Land and Natural Resources Division.

[FR Doc. 87-14409 Filed 6-24-87; 8:45 am]

BILLING CODE 4410-01-M

Lodging of Consent Decree in Action To Enjoin Discharge of Water Pollutants; Thermo-National Industries, Inc.

In accordance with Departmental Policy, 28 CFR 50.7, 38 FR 19029, notice is hereby given that a consent decree in *United States v. Thermo-National Industries, Inc.*, Civil Action No. 86-0922 (DRD), was lodged with the United States District Court for the District of New Jersey on June 11, 1987. The consent decree establishes a compliance program for the New Jersey plant owned and operated by Thermo-National Industries, Inc. to bring the plant into compliance with the Clean Water Act, 33 U.S.C. 1251 *et seq.*, and the applicable pretreatment regulations relating to the discharge of pollutants and requires payment of a civil penalty of $155,000.

The Department of Justice will receive for thirty (30) days from the date of publication of this notice, written comments relating to the consent decree. Comments should be addressed to the Assistant Attorney General, Land and Natural Resources Division, Department of Justice, Washington, DC 20530 and should refer to *United States v. Thermo-National Industries, Inc.*, D.J. Ref. No. 90-5-1-1-2544.

The consent decree may be examined at the office of the United States Attorney, District of New Jersey, 502 Federal Bldg., 970 Broad St., Newark, N.J. 07102; at the Region II office of the Environmental Protection Agency, 27 Federal Plaza, New York, New York 10278; and the Environmental Enforcement Section, Land and Natural Resources Division of the Department of Justice. In requesting a copy, please enclose a check in the amount of $1.80 (10 cents per page reproduction charge) payable to the Treasurer of the United States.

F. Henry Habicht II,

Assistant Attorney General, Land and Natural Resources Division.

[FR Doc. 87-14410 Filed 6-24-87; 8:45 am]

BILLING CODE 4410-01-M

Antitrust Division

National Cooperative Research Act of 1984; Petroleum Environmental Research Forum

Notice is hereby given that, pursuant to section 6(a) of the National Cooperative Research Act of 1984, 15 U.S.C. 4301 *et seq.*, the members of Petroleum Environmental Research Forum ("PERF") who are participating in Project No. 86-09, titled "Microbiological Processing of Petroleum Oily Wastes: Assessment of Promising Approaches," have filed an additional written notification simultaneously with the Attorney General and the Federal Trade Commission disclosing changes in the membership of this project. The original notification disclosing (1) the identities of the parties to the project and (2) the nature and objectives of the project was published in the **Federal Register** on March 25, 1987. The notificaiton was filed for the purpose of invoking the Act's provisions limiting the recovery of

antitrust plaintiffs to actual damages under specified circumstances. Pursuant to section 6(b) of the Act, the identities of the current parties to this project and its general area of planned activity are given below.

The current parties to this project are: Amoco Oil Company; Atlantic Richfield Company; Chevron Research Company; Conoco, Inc., Exxon Research and Engineering Company; The Standard Oil Company; Texaco Refining and Marketing Inc.; and Union Oil Company of California. The objectives of this project and its members and the area of planned activity in this project are fourfold: (i) Identify existing process research and development as it relates to the question of microbiological degradation of petroleum oily sludges; (ii) once the existing technology is defined, evaluation and ranking of this technology as to its applicability to the degradation of petroleum oily sludges; (iii) comparisons of the three most promising approaches; and (iv) recommendations of the most promising area for further research and development.

Joseph H. Widmar,

Director of Operations, Antitrust Division.

[FR Doc. 87-14411 Filed 6-24-87; 8:45 am]

BILLING CODE 4410-01-M

National Cooperative Research Act of 1984; Petroleum Environmental Research Forum

Notice is hereby given that, pursuant to section 6(a) of the National Cooperative Research Act of 1984, 15 U.S.C. 4301 *et seq.*, the members of Petroleum Environmental Research Forum ("PERF") who are participating in Project No. 86-06, titled "Evaluation of Hazardous Waste solidification Processes", have filed an additional written notification simultaneously with the Attorney General and the Federal Trade Commission disclosing changes in the membership of this project. The original notification disclosing (1) the indentities of the parties to this project and (2) the nature and objectives of this project was published in the **Federal Register** on March 25, 1987. The notification was filed for the purpose of invoking the Act's provisions limiting the recovery of antitrust plaintiffs to actual damages under specified circumstances. Pursuant to section 6(b) of the Act, the identities of the current parties to this project and its general area of planned activity are given below.

The current parties to this project are: Amoco Oil Company; Arco Petroleum Company; Chevron Research Company; Conoco, Inc.; Mobil Research and Development Corporation; Murphy Oil U.S.A., Inc.; Sun Refining and Marketing Co.; Texaco Refining and Marketing Inc.; and Union Oil Company of California. The objectives of this project and its members and the area of planned activity in this project is to evaluate some existing commercial processes relating to envoironmentally acceptable stabilization of petroleum refinery hazardous wastes listed by regulatory agencies.

Joseph H. Widmar,

Director of Operations, Antitrust Division.

[FR Doc. 87-14412 Filed 6-24-87; 8:45 am]

BILLING CODE 4410-01-M

Office of Juvenile Justice and Delinquency Prevention

Solicitation of Application for Private Nonprofit Missing Children's Agencies; Cancellation

AGENCY: Office of Juvenile Justice and Delinquency Prevention, Justice.

ACTION: Notice of cancellation of the solicitation of applications for private nonprofit missing childrens' agencies.

SUMMARY: The Office of Juvenile Justice and Delinquency Prevention (OJJDP), pursuant to a program announcement published in the **Federal Register** on December 11, 1986 at 51 **Federal Register** 44697-44699, cancels the notice of solicitation for applications for a grant program to provide support for private nonprofit missing childrens' agencies service activities.

DATE: The solicitation of applications for private nonprofit missing childrens' agencies is cancelled effective June 25, 1987.

FOR FURTHER INFORMATION CONTACT: Sylvia Sutton, Program Specialist, Office of Juvenile Justice and Delinquency Prevention, 633 Indiana Avenue NW., Washington, DC 20531, (202) 724-7573.

SUPPLEMENTARY INFORMATION: The original deadline in the December 11, 1986, **Federal Register** program announcement was September 1, 1987, or to the date that funds remain available. The funds available to provide support for private nonprofit missing childrens' agencies service activities ($588,660) have now been fully obligated.

Dated: June 22, 1987.

Approved.

Verne L. Spears,

Acting Administrator, Office of Juvenile Justice and Delinquency Prevention.

[FR Doc. 87-14482 Filed 6-24-87; 8:45 am]

BILLING CODE 4410-18-M

DEPARTMENT OF LABOR

Employment and Training Administration

[Employment and Training Order No. 1-87]

Trade Adjustment Assistance Program; Designation of Certifying Officers

AGENCY: Employment and Training Administration, Labor.

ACTION: Notice of designation of certifying officers.

SUMMARY: The trade adjustment assistance program operates under the Trade Act of 1974 to furnish program benefits to domestic workers adversely affected in their employment by imports of articles which are like or are directly competitive with articles produced by the firm employing the workers. Workers become eligible for the program benefits only if they are certified under the Act as eligible to apply for adjustment assistance. From time to time the agency issues an Order designating the officials of the agency authorized to act as certifying officers. Employment and Training Order No. 1-87 was issued to revise the listing of officials designated as certifying officers, superseding the provious Order. ET Order 1-87 is published below.

Dated: June 22, 1987.

Roberts J. Jones,

Deputy Assistant Secretary for Employment and Training.

Dated: June 22, 1987.

Directive: Employment and Training Order No. 1-87.

To: National and Regional Offices.

From: Roger D. Semerad, Assistant Secretary of Labor.

Subject: Trade Adjustment Assistance Program (Trade Act of 1974), (Designation of certifying officers).

1. *Purpose.* to designate certifying officers to carry out functions required for the worker adjustment assistance program under the Trade Act of 1974 and the certification regulations in the Code of Federal Regulations at Title 29, Part 90.

2. *Directives affected.* Employment and Training Order No. 1-83, February 22, 1983 (48 F.R. 9711), is superseded.

3. *Background.* Persons designated as certifying officers are vested with certain authority and assigned responsibilities under the Trade Act of 1974 and 29 CFR Part 90. Such authority and responsibilities particularly include making determinations and issuing certifications with respect to the eligibility of groups of workers to apply

for adjustment assistance under the Act and the program benefit regulations at 20 CFR part 617. The Secretary of Labor's Order 3-81, June 1, 1981 (46 FR 31117) delegated authority and assigned responsibility to the Assistant Secretary for Employment and Training for coordinating, monitoring, and insuring that the functions of the Secretary of Labor under the Trade Act of 1974 are carried out, including but not limited to "* * * [d]eveloping and promulgating program performance standards relating to the conduct of certification investigations, public hearings, issuance of notice of certification decisions, delivery of program benefits, and other processes involved in the administration of the trade adjustment assistance program * * * [and] * * * [d]etermining eligibility of groups of workers to apply for adjustment assistance * * *."

4. *Designation of officials.* By virtue of the authority vested in me by Secretary's Order 3-81, the following officials of the Employment and Training Administration, United States Department of Labor, are hereby designated as certifying officers for the trade adjustment assistance program:

a. Assistant Secretary for Employment and Training

b. Administrator, Office of Employment Security (OES)

c. Director, Unemployment Insurance Service (UIS)

d. Director, Office of Program Management, UIS

e. Deputy Director, Office of Program Management, UIS

f. Director, Office of Legislation and Actuarial Servcies, UIS

g. Deputy Director, Office of Legislation and Acturial Services, UIS

h. Director, Office of Trade Adjustment Assistance. (OTAA)

The foregoing designated certifying officers are delegated authority and assigned reponsibility, subject to the general direction and control of the Assistant Secretary and Deputy Assistant Secretary of the Employment and Training Administration and the Director and Deputy Director of the Office of Trade Adjustment Assistance, to carry out the duties and functions of certifying officers under the Trade Act of 1974 and 29 CFR Part 90.

5. *Effective date.* This Order is effective on date of issuance.

[FR Doc. 87-14415 Filed 6-24-87 8:45 am]

BILLING CODE 4510-30-M

Mine Safety and Health Administration

[Docket No. M-87-134-C]

Petition for Modification of Application of Mandatory Safety Standard; Tug Huff Coal Corp.

Tug Huff Coal Corporation, P.O. Box 727, Iaegar, West Virginia 24844-0727 has filed a petition to modify the application of 30 CFR 75.305 (weekly examinations for hazardous conditions) to its Sewell No. 1 Mine (I.D. No. 46-06390) located in McDowell County, West Virginia. The petition is filed under section 101(c) of the Federal Mine Safety and Health Act of 1977.

A summary of the petitioner's statements follows:

1. The petition concerns the requirement that return aircourses be examined in their entirety on a weekly basis.

2. Petitioner states that due to deteriorating roof and roof falls, certain areas of the mine cannot be safely traveled. No escapeway will be affected since the Primary Escapeway is in the Intake Entry and the Secondary Escapeway is the belt entry. Adequate ventilation is still maintained over the fall which is approximately 25 feet high. This is a one section coal mine and the air reading at the fan is 80,000 plus C.F.M. To attempt to rehabilitate the roof fall and immediate area of the mine would be exposing miners to hazardous conditions.

3. As an alternate method, petitioner proposes to allow the weekly inspection of the return to end just inby the fall area. The examiner would then proceed through a mandoor to the beltline which is only two breaks inside the mine. The examiner will check the ventilation and water gauge at the fan daily to insure proper ventilation in the mine.

4. Petitioner states that the proposed alternate method will provide the same degree of safety for the miners affected as that afforded by the standard.

Request for Comments

Persons interested in this petition may furnish written comments. These comments must be filed with the Office of Standards, Regulations and Variances, Mine Safety and Health Administration, Room 627, 4015 Wilson Boulevard, Arlington, Virginia 22203. All comments must be postmarked or received in that office on or before July 27, 1987. Copies of the petition are available for inspection at that address.

Dated: June 18, 1987.

Patricia W. Silvey,

Associate Assistant Secretary for Mine Safety and Health.

[FR Doc. 87-14416 Filed 6-24-87; 8:45 am]

BILLING CODE 4510-43-M

NATIONAL SCIENCE FOUNDATION

Advisory Panel for Biological Facilities Centers, Meeting

The National Science Foundation announces the following meeting.

Name: Advisory Panel for Biological Facilities Centers.

Date and Time:

Thursday, July 16, 1987 from 8:30 a.m. to 5:00 p.m.

Friday, July 17, 1987 from 8:00 a.m. to 5:00 p.m.

Place: National Science Foundation, Washington, DC 20550.

Type of Meeting: Closed.

Contact Person: John C. Wooley, Program Director, Biological Instrumentation, Room 325E, Telephone: 202/357-7652.

Purpose of Advisory Panel: To provide advice and recommendations concerning support for research instrumentation.

Agenda: To review and evaluate research proposals as part of the selection process for awards.

Reason for Closing: The proposals being reviewed include information of a proprietary or confidential nature, including technical information: financial data, such as salaries; and personal information concerning individuals associated with the proposals. These matters are within exemptions (4) and (6) of 5 U.S.C. 552b(c), Government in the Sunshine Act.

Authority to Close Meeting: This determination was made by the Committee Management Officer pursuant to provisions of section 10(d) of Pub. L. 92-463. The Committee Management Officer was delegated the authority to make such determinations by the Director, NSF, on July 6, 1979.

Rebecca Winkler,

Committee Management.

[FR Doc. 87-14463 Filed 6-24-87; 8:45 am]

BILLING CODE 7555-01-M

Committee for the Division of Mechanics, Structures, and Materials Engineering; Meeting

The National Science Foundation announces the following meeting:

Name: Committee for the Division of Mechanics, Structures, and Materials Engineering.

Date and Time:

July 14, 1987, 8:30 a.m. to 5:00 p.m.
July 15, 1987 8:30 a.m. to 3:00 p.m.

Type of Meeting: Open.

Contact Person: Ms. Hope Duckett, National Science Foundation Room 1110, Washington, DC 20550, Telephone (202) 357-9542.

Summary Minutes: may be obtained from Contact Person.

Agenda:

Tuesday, July 14, 1987

8:30-8:45 a.m.—Introductions and Welcoming Remarks
8:45-9:45 a.m.—Report of Activities by Advisory Committee Members
9:45-10:30 a.m.—Reports and Discussion of Action Items from the December 15-16, 1986 Meeting by NSF Staff and Advisory Committee Members
10:30-Noon—Activities of the Engineering Directorate and the Division
Noon-1:00 p.m.—LUNCH
1:30-5:00 p.m.—Discussion of Division Plans and Programs

Wednesday, July 15, 1987

8:30-10:30 a.m.—Objectives of the Division and the Advisory Committee for FY 1988
10:30-Noon—Development of Tasks and Assignments for FY 1988
Noon-1:30 p.m.—LUNCH
1:30-3:00 p.m.—Preparation of Summaries of Action Items and Recommendations to the Assistant Director
3:00-p.m.—ADJOURN

M. Rebecca Winkler,

Committee Management Officer.

[FR Doc. 87-14464 Filed 6-24-8:45 am]

NBILLING CODE 75550-01-M

Advisory Committee for Polar Programs; Meeting

The National Science Foundation announces the following meeting:

Name:

Advisory Committee for Polar Programs

Date and Time:

July 15, 1987, 8:30 a.m.-5:30 p.m.
July 16, 1987, 8:30 a.m.-5:00 p.m.
July 17, 1987, 8:30 a.m.-12:00 noon

Place:

Room 543; National Science Foundation, 1800 G. Street, N.W., Washington, DC 20550

Type of Meeting:

Closed—
July 15, 1987, 1:00 p.m.-5:30 p.m.
Open—
July 15, 1987, 8:30 a.m.-12:00 noon
July 16, 1987, 8:30 a.m.-5:00 p.m.
July 17, 1987, 8:30 a.m.-12:00 noon

Contact Person:

Dr. Peter E. Wilkniss, Division Director, Division of Polar Programs, Room 620, National Science Foundation, Washingtion, DC 20550. Telephone: 202/357-7766

Purpose of Meeting:

Serves to provide expert advice to the U.S. Antarctic Program and the Artic Program, including advice on polar operations support, budgetary planning, polar coordination and information, and science programs.

Agenda:

July 15, 1987

—8:30a.m.-9:30 a.m.—Welcome and Introductions, Administrative Announcements, Review and Adopt Agenda
—9:45 a.m.-12:00 noon—DPP Response to DAC on the February 1987 Oversight Review
—1:00 p.m.-5:30 p.m.—Peer Oversight Review of Polar Ocean Sciences

July 16, 1987

—8:30 a.m.-9:15 a.m.—Peer Oversight Review of Palmer Station
—9:15 a.m.-10:00 p.m.—Peer Oversight Review Antarctic Journal of the U.S., Treaty and SCAR reports
—10:30 a.m.-12:00 noon—Discussion of NSB Report
—1:30 p.m.-4:00 p.m.—Polar Science Long Range Plans
—4:00 p.m.-5:00 p.m.—Division Director's Discussion of Developing Thrusts and Future Directions; Arctic Systems Science, etc.

July 17, 1987

—8:30 a.m.-12:00 noon—Discussion of DAC Tasking, Rotation of Members, Schedule of Meetings, and Work Plan

Reason for Closing:

The meeting will deal with a review of grants and declinations in which the Committee will review materials containing the names of applicant institutions and principal investigators and privileged information contained in declined proposals. This meeting will also include a review of peer review documentation pertaining to applicants. Any non-exempt materials that may be discussed at this meeting (proposals that have been awarded) will be inextricably intertwined with the discussion of exempt materials and no further separation is practical. These matters are within exemptions (4) and (6) of 5 U.S.C. 552b (c), the Government in the Sunshine act.

Authority to Close Meeting:

This determination was made by the Committee Management Officer pursuant to provisions of section 10 (d) of Pub. L. 92-463. The Committee Management Officer was delegated the authority to make such determinations by the Director, National Science Foundation, on July 6, 1979.

Summary Minutes:

May be obtained from Contact Person.

M. Rebecca Winkler,

Committee Management Coordinator.

June 22, 1987.

[FR Doc. 87-14465 Filed 6-24-87; 8:45 am]

BILLING CODE 7555-01-M

NUCLEAR REGULATORY COMMISSION

Service Hours at the NRC Public Document Room

Effective June 29, 1987, the service hours for the Reading Room of the NRC Public Document Room, located at 1717 H Street NW., Washington, DC, are 7:45 a.m. to 4:15 p.m. The hours for telephone reference assistance are 8:30 a.m. to 4:15 p.m.

Dated at Washington, DC, this 19th day of June 1987.

For the Nuclear Regulatory Commission.

Samuel J. Chill,

Secretary of the Commission.

[FR Doc. 87-14379 Filed 6-24-87; 8:45 am]

BILLING CODE 7590-01-M

[Docket No. 030-20402, License No. 04-23240-01, EA 87-52]

United States Testing Company, Inc., Unitech Services Group; Order Modifying License, Effective Immediately

I

United States Testing Company, Inc., Unitech Services Group, (licensee) 2506 Davis Street San Leandro, California 94577, is the holder of a byproduct materials license issued by the Nuclear Regulatory Commission (the Commission or NRC) pursuant to 10 CFR Part 30. License No. 04-23240-01 was issued on February 13, 1986, was most recently amended on May 1, 1987 and expires on February 28, 1991. The license authorizes the licensee to use

cobalt-60 and iridium-192 industrial radiographic sources that possess activities up to 200 curies per source for radiography at temporary job sites in the United States.

II

U.S. Testing Company, Inc. employs 200–300 radiographers, assistant radiographers and helper/trainees and, between January 1985 and February 1987 has conducted radiographic operations at 11 locations under NRC jurisdiction and 35 locations under Agreement State jurisdiction. On February 10, 1987, the NRC was briefed by Arizona officials on an overexposure incident and associated causes that occurred at a radiography jobsite in Page, Arizona on February 6, 1987. It was determined that an associated cause of the incident was a failure in the implementation of procedures established to assure that only personnel appropriately trained in radiation safety are assigned to radiographic duties. These same procedures are a part of the radiation safety program incorporated into the license issued to U.S. Testing for jobsites under NRC jurisdiction.

The NRC initiated an inspection of February 10, 1987 at the licensee's San Leandro, California office and on February 12, 1987 at the Hoboken, New Jersey office. These initial inspections, which concerned licensed activities conducted since January 1, 1985, revealed that there were significant deficiencies in the licensee's record keeping program as it related to the training and certification of radiographers and radiographer assistants. Consequently, NRC conducted an intensive review of the licensee's records related to several important radiation safety program elements and participated in numerous interviews of licensee personnel throughout the United States, the details of which are included in Inspection Report No. 030–20402/87–01. This data was further supplemented by similar data collected by inspectors in Agreement States.

The inspection effort revealed that more than 50% of the individuals noted on the source utilization logs as radiographers and assistant radiographers at NRC sites were not properly certified before using radiographic exposure devices. Certification problems included: (1) Allowing individuals to perform radiography after their failing one or more certification examinations, (2) allowing individuals to perform radiography before all training and examinations were completed, and (3) allowing individuals with expired certifications to perform radiography. In addition to these identified training/certification problems, the inspection findings demonstrated that the licensee's records of training/certification were often incompleted and, the numerous instances, were missing. Notably, the licensee, after much effort, was unable to produce any such records for nineteen individuals who were identified to have been involved in radiographic operations. In addition, field audits of twenty-six radiographers were not performed, contrary to a quarterly frequency requirements.

The training/certification area was not the only area where problems were found. Three unreported exposures in excess of regulatory limits were indentified. Associated with these findings were repeated failures to peform adequate evaluations of the causes and personnel dose evaluations related to the exposure incidents. In addition, there were numerous instances (several hundred) where the licensee failed to accurately or completely record on required utilization logs such information as: (1) The identification of individuals conducting radiographic operations, (2) pocket dosimeter data, (3) survey data, and (4) the type of radiography unit being used. Such information is extremely important because it often is the only record available to assure company management that field operations are being conducted in a manner consistent with established safety practices and NRC requirements. In addtion, the utilization logs allow reconstruction of the facts surrounding a radiation incident, if such were to occur.

Numerous other radiation safety violations which were identified included failures to: (1) Conduct adequate radiation surveys to establish boundaries of restricted areas for radiographic operations, (2) track personnel exposure histories, (3) maintain required surveillance over high radiation areas during the conduct of radiographic operations, (4) conduct required maintenance and equipment inspections, (5) control inoperable survey instruments, and (6) comply with procedural requirements during the transfer of a source.

III

In response to its preliminary findings made early in the inspection effort, Region V issued a Confirmatory Action Letter (CAL) to the licensee on February 13, 1987. The issuance of the CAL was based on findings which demonstrated significant deficiencies in the licensee's training/certification program and required the licensee to have a company official personally certify in writing to the NRC that named radiographers had received appropriate training under 10 CFR Part 34. Although the inspections have confirmed that the licensee's training/certification program was clearly unsatisfactory in the past, subsequent evaluations by the NRC have shown that the licensee appears to be complying with the CAL. However, the findings in this area indicated, prior to issuance of the CAL, a significant lack of management oversight and control which contributed to licensee personnel not fully appreciating the radiation safety hazards associated with their specific radiographic duties.

In addition, the NRC inspection effort uncovered numerous other violations associated with the licensee's radiation safety program. This is particularly significant because the licensee had submitted a revised radiation safety program as part of its application for the license issued on February 13, 1986 which provided for centralized management control of the radiation safety program. The inspection findings clearly demonstrate that the licensee significantly failed in the implementatiion of this program. These findings are consistent with the findings of the licensee's consultant, Clifford and Associates, which concluded that "there was a severe breakdown of the radiation safety program during the 2nd half of 1986." Furthermore, in addition to the breakdown in management oversight and control of the radiation safety program, the identified radiation safety violations demonstrate either an indifference to radiation safety or a lack of appreciation of the radiation hazards associated with radiographic operations performed by licensee personnel, which at the very least threatens the safety of personnel conducting radiographic operations.

Two Notices of Violation and Proposed Imposition of Civil Penalty have been issued in the past, the most recent having been issued on April 12, 1984. Both enforcement actions involved radiation safety violations. It is clear from such a history, and what has been developed by the ongoing inspection effort, that licensee management has failed to effectively control its radiation safety program.

In view of this information, it is apparent that the licensee has not taken adequate actions to conduct its licensed activities in compliance with Commission requirements. Specifically, the centralized management concept applied to the implementation of the

radiation safety program has not been adequate to control the dispersed and numerous activities of the licensee. Without significant improvement in the management control of the radiation safety program, the NRC lacks reasonable assurance that the licensee's current operations will comply with the Commission's requirements such that the health and safety of the public, including licensee employees, will be protected. Therefore, the public health, safety and interest requires immediate action to improve the control of licensed activities as a condition of future operation. Accordingly, the NRC concludes that continuation of licensed activities as currently performed by United States Testing Company, Inc., would constitute an unreasonable risk to public health and safety. For these reasons and pursuant to 10 CFR 2.201(c), no prior notice is required.

IV

Accordingly, pursuant to sections 81, 161b, c, i, and o, 182 and 186 of the Atomic Energy Act of 1954, as amended, and the Commission's regulations in 10 CFR 2.204, and 10 CFR Part 30, It is hereby ordered, effectively immediately, that license 04-23240-01 is modified as follows:

A. Radiographic operations may be conducted at any individual jobsite after the date of this Order only if a Radiation Safety Officer (RSO) has been appointed for (1) the jobsite or (2) if a temporary jobsite, a RSO appointed for the centralized facility controlling the licensed activities at the temporary jobsite. Prior to any operation after the date of this Order, the Regional Administrator, Region V, shall receive written certification under oath of affirmation from the President of the licensee's Unitech Services Group that an RSO is assigned onsite, and that the requirements of sections IV C, D, and E (as described below) of this Order have been met. The name, qualifications, and site location of the assigned RSO shall be included in the NRC notification.

B. All licensed sources shall be placed in their shielded position and maintained in storage in accordance with the requirements of 10 CFR Part 20 until the RSO for the jobsite, or centralized facility has been appointed. In addition, if an RSO has not been appointed, the licensee may not utilize the general license for an agreement state licensee under 10 CFR Part 150 to allow operation at a site under NRC jurisdiction.

C. Each RSO shall:

(1) Meet all requirements as specified in paragraph 3.3.5 of Section VIII of the Radiation Safety Program Manual without the "equivalent experience and education" option set forth in Section 3.3.5(b).

(2) Receive at least 16 hours additional training from the Corporate Radiation Safety Director (RSD) specifically related to applicable NRC requirements and implementation of the Radiation Safety Program Manual.

(3) Be certified by the RSD and the President of the licensee, in writing, as having attained sufficient knowledge and management capability to administer and control the radiation safety program at the assigned site and that the requirements of paragraphs (1) and (2) have been met.

D. The license and all documentation required by NRC regulations and the licensee's Radiation Safety Program Manual shall be maintained by the site RSO with copies sent to the RSD.

E. The RSO shall have authority for and be responsible to the licensee to administer the onsite radiation safety program under direct supervision of the RSD. The RSO shall have the authority and be directed in writing by the President to suspend any activity which is not in compliance with the NRC regulations or the license and maintain such suspensions until all corrective action is complete. The RSD shall maintain records of all such suspensions.

F. The Corporate Radiation Safety Director shall continue to have overall responsibility for assuring the implementation of the radiation safety program at licensed job sites. This responsibility shall include, but not be limited to:

(1) A review of all required records as received and prior to filing.

(2) A quarterly onsite audit, at each site, of the radiation safety program implementation.

(3) Submittal of a quarterly radiation safety program status report to the President and Regional Administrator, Region V, that specifically identifies deficiencies and corrective actions.

(4) The Corporate Radiation Safety Director shall notify Region V prior to initiating radiographic operations at a site which NRC has not been previously informed of radiographic operations pursuant to this condition.

G. As a condition for continuing licensed activities, assuming activities have been restarted under the above conditions, the licensee shall obtain the services of one or more independent consultant(s) to perform, an assessment of the licensee to include at a minimum, the actions indicated below. The consultant(s) shall have in-depth knowledge of radiation protection theory and good practice, management of radiation protection programs and radiation protection programmatic quality assurance obtained through a combination of academic training and practical experience of its staff assigned to the task. Within 30 days of the date of this Order, the licensee shall submit to the Regional Administrator, Region V, for approval, the name(s) of the proposed organization(s), the qualifications of the individuals who will perform the assessment, statements from these individuals and organization(s) regarding the extent to which they have been previously employed by the licensee and a description of the plan to accomplish the actions set forth below. The consultant(s) shall complete the assessment within 120 days of NRC approval. The consultant(s) shall prepare a Radiation Safety Program Evaluation Report (RSPER) that assesses:

(1) The qualifications, training and commitment of U.S. Testing Company, Inc. employees to perform assigned radiation protection functions at all job sites under NRC jurisdiction including San Leandro, California and Hoboken, New Jersey.

(2) Appropriateness of all U.S. Testing Company, Inc. employee radiation protection assignments; i.e., the proper match of persons and responsibilities. This assessment shall include but not necessarily be limited to the President, Vice President, Executive Safety Committee Members, Radiation Safety Director, Radiation Safety Officers, Project Managers, Supervisors and Monitors.

(3) Adequacy of the number of U.S. Testing Company, Inc. staff assigned to perform radiation safety management and supervision activities under NRC jurisdiction.

(4) Implementation of the U.S. Testing Company, Inc. Radiation Safety Program Manual related to assigned radiation protection functions at all jobsites under NRC jurisdiction. This assessment shall include at a minimum an on-site audit at each jobsite.

(5) Adequacy of all U.S. Testing Company, Inc. records necessary to demonstrate that the radiation protection program is conducted as required by the license referenced Radiation Safety Program Manual and NRC regulations.

(6) Implementation of the U.S. Testing Company, Inc. radiation protection quality assurance program by which management at corporate, regional and jobsite levels assures itself, through an independent system of checks and balances, that the radiation protection

program is adequate and being conducted as assigned.

(7) Appropriateness of the management structure and organizations of the licensee to control licensed activities to assure compliance with all Commission requirements at dispersed locations throughout NRC jurisdictions.

Based on its findings in Items (1) through (7) above, the consultant(s) shall, in its report, identify programmatic weaknesses which might lead to further violations of NRC requirements and provide recommendations for improvements necessary to assure compliance with NRC requirements. The licensee shall direct the consultant(s) to submit to the Regional Administrator, Region V, a copy of any report and any drafts thereof, at the same time they are sent to the licensee or any of its employees.

Within 30 days after receipt of the consultant(s) report, U.S. Testing Company, Inc. shall submit a written response to the conclusions in the report to the Regional Administrator, NRC Region V, and to the Deputy Executive Director for Regional Operations. U.S. Testing Company, Inc. shall describe how it will incorporate and implement recommendations of the consultant's together with a schedule for implementation. If any recommendations are not adopted, U.S. Testing Company, Inc. shall provide in its report justification for any recommendation not accepted.

H. The Regional Administrator, Region V, may relax or terminate any of these conditions for good cause shown.

V

The licensee or any other person adversely affected by this Order may request a hearing within 20 days of its issuance. Any answer to this Order or request for hearing shall be submitted to the Director, Office of Enforcement, U.S. Nuclear Regulatory Commission, Washington, DC 20555. Copies shall also be sent to the Assistant General Counsel for Enforcement, Office of General Counsel at the same address and to the Regional Administrator, NRC Region V, 1450 Maria Lane, Suite 210, Walnut Creek, California 94596. If a person other than the licensee requests a hearing, that person shall set forth with particularity the manner in which the petitioner's interest is adversely affected by this Order and should address the criteria set forth in 10 CFR 2.714(d). Upon the failure of the licensee to answer or request a hearing within the specified time, this Order shall be final without further proceedings. An answer to this order or a request for hearing shall not stay the immediate effectiveness of this order.

If a hearing is requested by the licensee, the Commission will issue an order designating the time and place of any hearing. If a hearing is held, the issue to be considered at such hearing shall be whether this order should be sustained.

Dated at Bethesda, Maryland, this 17th day of June 1987.

For the Nuclear Regulatory Commission.

James M. Taylor,

Deputy Executive Director for Regional Operations.

[FR Doc. 87-14483 Filed 6-24-87; 8:45 am]

BILLING CODE 7590-01-M

SECURITIES AND EXCHANGE COMMISSION

Agency Information Collection Activities Under OMB Review

Agency Clearance Officer: Kenneth Fogash (202) 272-2142.

Upon written request, copy available from: Securities and Exchange Commission, Office of Consumer Affairs and Information Services, Washington, DC 20549.

Revision

Form 8-K, Form N-SAR, Regulation S-K

[SEC File No. 270-3]

Notice is hereby given that pursuant to the Paperwork Reduction Act of 1980 (44 U.S.C. 3501 *et seq.*), the Securities and Exchange Commission has submitted for approval a proposed amendment to clarify the meaning of the term "disagreements" as used in Forms 8-K and N-SAR, to provide for more complete disclosure of potential opinion shopping situations, to conform the disclosures required by each form, to move the substantive disclosure requirements related to a change in accountants from Form 8-K to Regulation S-K, and to make the time frame for disclosure concerning a change in accountants in Schedule 14A parallel the time frame for such disclosure in Regulation S-K.

Information collected and records prepared pursuant to the proposed rules would focus on documenting circumstances surrounding a change in a registrant's certifying accountants. This information will be used by the public and/or the Commission to review the circumstances under which the registrant changed auditors and to determine whether the newly engaged and former accountants (along with other accountants consulted by the registrant) have different views on accounting issues that may materially impact the registrant's financial statements.

There will generally be a response to the information and record collection request whenever a registrant changes its certifying accountant.

The potential respondents include all entities that file registration statements or reports (and auditors of financial statements in such registration statements and reports) pursuant to the Securities Act of 1933, the Securities Exchange Act of 1934, the Public Utility Holding Company Act of 1935, or the Investment Company Act of 1940.

It is estimated that the increase in compliance burden resulting from the proposed rules would be approximately one hour for each public company changing certifying accountants and two hours for each investment company changing certifying accountants. The additional hours assigned to investment companies are a result of increased disclosures resulting from conforming Form N-SAR to Form 8-K.

Submit comments to OMB Desk Officer: Robert Neal (202) 395-7430, Office of Information and Regulatory Affairs, Room 3228, NEOB, Washington, DC 20503.

Jonathan G. Katz,

Secretary.

June 19, 1987.

[FR Doc. 87-14438 Filed 6-24-87; 8:45 am]

BILLING CODE 8010-01-M

[Release No. 34-24616; File No. SR-Amex-87-14]

Self-Regulatory Organizations; Proposed Rule Change by American Stock Exchange, Inc. Relating to a Proposed Change in Exchange Policy To Permit Specialists To Accept Market-on-Close Orders

Pursuant to section 19(b)(1) of the Securities Exchange Act of 1934, 15 U.S.C. 78s(b)(1), notice is hereby given that on June 2, 1987, the American Stock Exchange, Inc. filed with the Securities and Exchange Commission the proposed rule change as described in Items, I, II, and III below, which Items have been prepared by the self-regulatory organization. The Commission is publishing this notice to solicit comments on the proposed rule change from interested persons.

I. Self-Regulatory Organization's Statement of the Terms of Substance of the Proposed Rule Change

The American Stock Exchange, Inc. ("Amex" or "Exchange") proposes a

change in Exchange policy to permit specialists to handle market-on-close orders, and to allow specialists to pair-off buy and sell market-on-close orders and report the paired-off trades to the consolidated reporting system as "stopped stock" transactions on the last business day prior to options and futures contracts expiration/settlement dates ("Expiration Friday").[1]

The text of the proposed rule change is available at the Office of the Secretary, Annex, and at the Commission.

II. Self-Regulatory Organization's Statement of the Purpose of, and Statutory Basis for, the Proposed Rule Change

In its filing with the Commission, the self-regulatory organization included statements concerning the purpose of and basis for the proposed rule change and discussed any comments it received on the proposed rule change. The text of these statements may be examined at the places specified in Item IV below. The self-regulatory organization has prepared summaries, set forth in sections (A), (B), and (C) below, of the most significant aspects of such statements.

A. Self-Regulatory Organization's Statement of the Purpose of, and the Statutory Basis for, the Proposed Rule Change

(1) Purpose

Exchange Rule 131 defines a market-on-close order, also known as an at-the-close order, as a market order which is to be executed at or as near to the close as practicable. Under current exchange policy, floor brokers are permitted to accept market-on-close orders. Amex specialists, however, have been prohibited from accepting such orders from floor brokers, thereby requiring any broker handling such an order to remain in the tradng crowd for the specific security at or near the close. In view of the significant trading volume increase in recent years, including the especially acute volume surges occurring on triple-expiration Fridays when stock index options and futures and individual stock options expire simultaneously, existing policy may serve to impose an undue burden on floor brokers desiring the efficient execution of such orders. Permitting Exchange specialists to accept market-on-close orders will contribute to the more efficient execution of such orders, especially during periods of high volume; floor brokers thereby would no longer be required to remain in the trading crowd during one of the busier times of the day to represent such orders.

Consistent with this proposed change, the Amex proposes to allow specialists to execute "stopped stock" transactions on market-on-close orders in certain situations on the last business day prior to options and futures contracts expiration and settlement dates.[2] Specifically, the specialist will be allowed to stop market-on-close orders when holding simultaneously both buy and sell market-on-close orders in the same stock. The rule provides that when the aggregate size of the buy and sell orders is equal, they may be stopped against each other and executed at the last sale price just prior to the close of trading. Further, market-on-close order imbalances will be executed at the prevailing bid or offer just prior to the close. By reporting paired-off trades as "stopped stock" transactions, the specialist will be able to alert limit order customers that stopped market orders holding priority over their limit orders have been executed in the market.

(2) Basis

The proposed rule change is consistent with section 6(b) of the Act in general and furthers the objectives of section 6(b)(5) in particular in that the proposed change in Exchange policy will foster cooperation and coordination with persons engaged in regulating and facilitating transactions in securities.

B. Self-Regulatory Organization's Statement on Burden on Competition

The proposed rule change will impose no burden on competition.

C. Self-Regulatory Organization's Statement on Comments on the Proposed Rule Change Received from Members, Participants or Others

No written comments were solicited or received with respect to the proposed rule change.

III. Date of Effectiveness of the Proposed Rule Change and Timing for Commission Action

The American Stock Exchange, Inc. requests that the proposed rule change be given accelerated effectiveness pursuant to section 19(b)(2) of the Act.

The Commission finds that the proposed rule changes are consistent with the requirements of the Act and the rules and regulations thereunder applicable to a securities exchange, and in particular, the requirements of section 6 and the rules and regulations thereunder. Currently, persons unwinding index arbitrage positions on Expiration Friday can submit market-on-close orders to the specialist on the New York Stock Exchange, but not the Amex. As several stocks listed on the Amex are components of stock index options and futures settling at the close on Expiration Friday, it is important for persons unwinding these index products on Expiration Friday to receive the closing price in these Amex stocks. It is appropriate to afford persons the same means to capture the last sale price on both Amex and New York Stock Exchange listed stocks. In addition, the proposed changes should improve the efficiency of the market in the affected Amex stocks at the close on Expiration Friday by obviating the need for floor brokers to remain in the trading crowd at the close, and by enabling specialists to receive orders to be executed at the close before 4:00 p.m.

There is good cause for the Commission to accelerate the effective date of the proposed rule changes changes because such action will permit the Exchange to have its new procedures in place to accommodate trading on the next triple expiration Friday occurring on June 19, when stock index options and futures and stock options expire simultaneously. However, the Commission limits approval of the proposed rule changes for a six-month pilot period in order to evaluate the effect of the proposed procedure on the transactions in index related Amex stocks at the close on Expiration Friday.

IV. Solicitation of Comments

Interested persons are invited to submit written data, views and arguments concerning the foregoing. Persons making written submissions should file six copies thereof with the Secretary, Securities and Exchange Commission, 450 Fifth Street, NW., Washington, DC 20549. Copies of the submission, all subsequent amendments, all written statements with respect to the proposed rule change that are filed with the Commission, and all written communications relating to the proposed rule change between the Commission and any person, other than those that may be withheld from the public in accordance with the provisions of 5 U.S.C. 552, will be available for

[1] The Amex submitted an amendment to its filing, adding a section concerning " 'stopping' stock on market-on-close orders on the last business day prior to options and futures contracts expiration/settlement dates." *See* letter from Simon Krauthamer, Amex, to Sharon Lawson, Branch Chief, SEC, dated June 18, 1987 ("Amendment No. 1").

[2] *See* Amex proposed Rule 109(d).

inspection and copying in the Commission's Public Reference Section, 450 Fifth Street, NW., Washington, DC 20549. Copies of such filing will also be available for inspection and copying at the principal office of the above-mentioned self-regulatory organization. All submissions should refer to File No. SR-Amex-87-14 and should be submitted by July 16, 1987.

It is therefore ordered, pursuant to section 19(b)(2) of the Act, that proposed rule change SR-Amex-87-14 be, and hereby is, approved for a period of six months.

For the Commission by the Division of Market Regulation, pursuant to delegated authority.

Dated: June 19, 1987.

Jonathan G. Katz,

Secretary.

[FR Doc. 87-14441 Filed 6-24-87; 8:45 am]

BILLING CODE 8010-01-M

[Release No. 34-24604; File No. SR-NYSE-87-12]

Self-Regulatory Organizations; New York Stock Exchange, Inc.; Order Approving Proposed Rule Change

On April 10, 1987, the New York Stock Exchange, Inc., submitted to the Securities and Exchange Commission ("Commission"), pursuant to section 19(b)(1) under the Securities Exchange Act of 1934 ("Act") [1] and Rule 19b-4 thereunder,[2] a proposed rule change to implement, on a permanent basis, 2½ point strike price intervals in the Exchange's Composite Index ("NYA").

The proposed rule change was noticed in Securities Exchange Act Release No. 34-24465 (May 15, 1987), 52 FR 19947 (May 28, 1987). No comments were received on the proposed rule change.

The Exchange is proposing to make permanent an amendment to Rule 703.30, which permits the Exchange to list options on the NYSE Composite Index at 2½ point strike price intervals (*e.g.*, at 167½ and 172½, as well as 165, 170, and 175). The Exchange's experience with 2½ point strike price intervals has been very positive. With respect to trading activity, the Exchange is unable to differentiate index options contracts with 2½ point strike prices from those with strike prices that are a multiple of five: the relative level of activity is, as expected, solely a function of the index value at any particular time. In addition, the Exchange is unable to discern any negative impact on liquidity. The Exchange also believes that the availability of series at 2½ point intervals eased the impact of the delisting of its options on the NYSE Double Index. In short, the Exchange is unaware of any problems created by its use of 2½ point strike prices.

The Commission finds that the proposed rule change is consistent with the requirements of the Act and the rules and regulations thereunder applicable to a national securities exchange, and, in particular, the requirements of section 6,[3] and the rules and regulations thereunder. The proposal should act to facilitate the mechanism of a free and open market by affording investors more precise strike price intervals in NYA options while maintaining sufficient liquidity in the various strike prices.

It is therefore ordered, pursuant to section 19(b)(2) of the Act,[4] that the proposed rule change is approved.

For the Commission, by the Division of Market Regulation, pursuant to delegated authority.[5]

Dated: June 17, 1987.

Jonathan G. Katz,

Secretary.

[FR Doc. 87-14484 Filed 6-24-87; 8:45 am]

BILLING CODE 8010-01-M

[1] 15 U.S.C. 78s(b)(1) (1982).

[2] 17 CFR 240.19b-4 (1985).

[3] 15 U.S.C. 78f (1982).

[4] 15 U.S.C. 78s(b)(2) (1982).

[5] 17 CFR 200.30-3(a)(12) (1985).

[Release No. 34-24617; File No. SR-OCC-82-14]

Self-Regulatory Organizations; the Options Clearing Corp.; Withdrawal of Proposed Rule Change

On June 30, 1982, the Options Clearing Corporation ("OCC") filed with the Commission, pursuant to section 19(b)(1) of the Securities Exchange Act of 1934 (the "Act"), a proposed rule change that would provide for the issuance of options covering groups of underlying stocks ("stock group options") and the clearance and settlement of such options. Notice of this proposed rule change was published in the **Federal Register** on October 12, 1982.[1] By a letter dated May 8, 1987, OCC requested that this proposed rule change be withdrawn.

It is therefore ordered, pursuant to section 19(b)(2) of the Act, that the proposed rule change be, and hereby is, withdrawn.

For the Commission, by the Division of Market Regulation pursuant to delegated authority.

Dated: June 19, 1987.

Jonathan G. Katz,

Secretary.

[FR Doc. 87-14485 Filed 6-24-87; 8:45 am]

BILLING CODE 8010-01-M

[1] *See* Securities Exchange Act Release No. 19046 (September 13, 1982), 47 FR 44901 (File No. SR-OCC-82-14)

[File No. 1-8810]

Application To Withdraw From Listing and Registration; Landmark Bancshares Corp. (Common Stock, No Par Value)

June 19, 1987.

Landmark Bancshares Corporation ("Company"), has filed an application with the Securities and Exchange Commission pursuant to section 12(d) of the Securities Exchange Act of 1934 ("Act") and Rule 12d2-2(d) promulgated thereunder, to withdraw the above specified security from listing and registration on the American Stock Exchange, Inc. ("Amex"). The Company's common stock recently began trading on the New York Stock Exchange ("NYSE").

The reasons alleged in the application for withdrawing this security from listing and registration on the Amex include the following:

The Company considered the direct and indirect costs and expenses attendant in maintaining the dual listing of its common stock on the NYSE and the Amex. The Company does not see any particular advantage in the dual trading of its stock and believes that dual listing would fragment the market for it common stock.

Any interested person may, on or before July 13, 1987 submit by letter to the Secretary of the Securities and Exchange Commission, Washington, DC 20549, facts bearing upon whether the application has been made in accordance with the rules of the Exchange and what terms, if any, should be imposed by the Commission for the protection of investors. The Commission, based on the information submitted to it, will issue an order granting the application after the date mentioned above, unless the Commission determines to order a hearing on the matter.

For the Commission, by the Division of Market Regulation, pursuant to delegated authority.

Jonathan G. Katz,

Secretary.

[FR Doc. 87-14440 Filed 6-24-87; 8:45 am]

BILLING CODE 8010-01-M

OFFICE OF THE UNITED STATES TRADE REPRESENTATIVE

Services Policy Advisory Committee, Advisory Committee for Trade Negotiations; Meetings and Determinations of Closing of Meetings

The meetings of the Services Policy Advisory Committee to be held Wednesday, July 15, 1987, from 9:30 a.m. to 12:00 noon; the Advisory Committee for Trade Negotiations to be held Thursday July 30, 1987, from 1:30 p.m. to 4:00 p.m. in Washington, DC, will include the development, review and discussion of current issues which influence the trade policy of the United States. Pursuant to section 2155(f)(2) of Title 19 of the United States Code, I have determined that these meetings will be concerned with matters the disclosure of which would seriously compromise the Government's negotiating objectives or bargaining positions.

Inquiries may be directed to Barbara W. North, Director, Office of Private Sector Liaison, Office of the United States Trade Representative, Executive Office of the President, Washington, DC 20506.

Clayton Yeutter,

United States Trade Representative.

[FR Doc. 87-14419 Filed 6-24-87; 8:45 am]

BILLING CODE 3190-01-M

DEPARTMENT OF TRANSPORTATION

Federal Highway Administration

Environmental Impact Statement; Tulsa County, OK

AGENCY: Federal Highway Administration (FHWA), DOT.

ACTION: Notice of intent.

SUMMARY: The FHWA is issuing this notice to advise the public that an environmental impact statement will be prepared for a proposed highway project in Tulsa County, Oklahoma.

FOR FURTHER INFORMATION CONTACT: Frank N. Cunningham, Assistant Division Administrator, Federal Highway Administration, 200 NW. Fifth Street, Room 454, Oklahoma City, Oklahoma 73102, Telephone: (405) 231-4725.

SUPPLEMENTARY INFORMATION: The FHWA, in cooperation with the Oklahoma Department of Transportation (ODOT) and the City of Tulsa, will prepare an environmental impact statement (EIS) on a proposal to construct a new facility (Creek Expressway) from the Mingo Valley Expressway westward approximately 8.0 miles to U.S.-75 in south Tulsa. The proposed route corridor under study is bounded on the north by South 81st Street, on the south by South 131st Street, on the east by Garnett Road, and on the west by U.S.-75. If constructed, the improvement would be designated as SH-117 and consist of a multi-lane, controlled access facility with appropriate grade separations. Improvements to the corridor are considered necessary to provide for the existing and projected traffic demand. The proposed Creek Expressway is included in the long range transportation plan for the Tulsa metropolitan area.

The alternates to be considered include the no-build, improvement of existing city streets, and/or construction of an expressway. A mass transit alternate will be considered, either separately or in conjunction with other alternates.

Letters describing the proposed action and soliciting comments have been sent to appropriate Federal, State and local agencies and to provide organizations and citizens who have previously expressed interest in this proposal. In addition, in order to further facilitate early coordination and scoping, a minimum of four meetings will be held with a Study Advisory Committee composed of representatives of various interest groups and with a Technical Advisory Committee composed of elected and appointed officials. Also, a minimum of two public meetings will be conducted to provide an opportunity for any member of the general public to raise issues which should be considered. A public hearing will also be held. Public notice will be given of the time and place of the meetings and hearing. The draft EIS will be available for public and agency review and comment.

To ensure that the full range of issues related to this proposed action are addressed and all significant issues identified, comments and suggestions are invited from all interested parties. Comments or questions concerning this proposed action and the EIS should be directed to the FHWA at the address provided above.

(Catalog of Federal Domestic Assistance Program Number 20.205, Highway Research, Planning Construction. The regulations implementing Executive Order 12372 regarding intergovernmental consultation on Federal programs and activities apply to this program.)

Issued on June 19, 1987.

Gordon E. Penney,

Division Administrator, Oklahoma City, Oklahoma.

[FR Doc. 87-14414 Filed 6-24-87; 8:45 am]

BILLING CODE 4910-22-M

DEPARTMENT OF THE TREASURY

Public Information Collection Requirements Submitted to OMB for Review

Dated: June 19, 1987.

The Department of Treasury has submitted the following public information collection requirement(s) to OMB for review and clearance under the Paperwork Reduction Act of 1980, Pub. L. 96-511. Copies of the submission(s) may be obtained by calling the Treasury Bureau Clearance Officer listed. Comments to the OMB reviewer listed and to the Treasury Department Clearance Officer, Department of the Treasury, Room 2224, 15th and Pennsylvania Avenue, NW., Washington, DC 20220.

Comptroller of the Currency

OMB Number: New.

Form Number: ATF F 5300.3.

Type of Review: Existing Collection.

Title: Letterhead Request for Information in Regard to Federal Firearms Dealers Records (Dealers Records of Acquisition, Disposition and Supporting Data).

Description: This letter gives the user a simplified format in which to list the required information which this Bureau needs to perform its function in regard to the Federal Firearms Laws. It saves time for the respondent in that all the questions are simple, a return address is supplied and the Bureau uses the information to maintain a current status of firearms dealer information.

Respondents: Individual or households, Businesses.

Estimated Burden: 697 hours.

OMB Number: 1512-0457.

Form Number: ATF REC 5000/5.

Type of Review: Revision.

Title: Letterhead Notice-Implementation of Electronic Fund Transfer.

Description: Section 27(c) of Pub. L. 98-369 requires that the payment of alcohol and tobacco excise taxes of $5 million or more be paid by electronic funds transfer (EFT). This notice is used by ATF to identify taxpayers who are required to remit taxes using EFT. The information is available only from the taxpayer.

Respondents: Businesses.

Estimated Burden: 200 hours.

Clearance Officer: Robert Masarsky (202) 566-7077, Bureau of Alcohol, Tobacco and Firearms, Room 7011, 1200 Pennsylvania Avenue, NW., Washington, DC 20226.

OMB Reviewer: Milo Sunderhauf (202 395-6880, Office of Management and

Budget, Room 3208, New Executive Office Building, Washington, DC 20503.

Internal Revenue Service

OMB Number: 1545-0458.
Form Number: 4852.
Type of Review: Reinstatement.
Title: Substitute for Form W-2, Wage and Tax Statement or Form W-2P, Statement for Recipients of Annuities, Pensions, Retired Pay, or IRA Payments.
Description: In the absence of a Form W-2, W-2C or W-2P from the employer or payor, From 4852 is used by the taxpayer to estimate gross wages, annuities, pensions, retired pay or IRA payments received as well as income or FICA tax withheld during the year. It is attached to the return for processing as would a Form W-2, W-2C or W-2P.
Respondents: Individuals or households.
Estimated Burden: 390,000 hours.
Clearance Officer: Garrick Shear (202) 566-6150, Internal Revenue Service, Room 5571, 1111 Constitution Avenue, NW, Washington, DC 20224.
OMB Reviewer: Milo Sunderhauf (202) 395-6880, Office of Management and Budget, Room 3208, New Executive Office Building, Washington, DC 20503.

Dale A. Morgan,
Departmental Reports, Management Officer.
[FR Doc. 87-14418 Filed 6-24-87; 8:45 am]
BILLING CODE 4810-25-M

UNITED STATES INFORMATION AGENCY

Culturally Significant Objects Imported for Exhibition

Notice is hereby given of the following determination: Pursuant to the authority vested in me by the act of October 19, 1965 (79 Stat. 985, 22 U.S.C. 2459), Executive Order 12047 of March 27, 1978 (43 FR 13359), March 29, 1978), and Delegation Order No. 85-5 of June 27, 1985 (50 FR 27393, July 2, 1985), I hereby determine that the objects to be included in the exhibit, "Judaica from Vatican Libraries" (see list [1]) imported from abroad for the temporary exhibition without profit within the United States are of cultural significance. These objects are imported pursuant to loan agreements with the foreign lenders. I also determine that the temporary exhibition or display of the listed exhibit objects at the Center for the Fine Arts in Miami, Florida, beginning on or about July 15, 1986, to on or about September 17, 1987, and at other venues in the United States until approximately June 15, 1989, is in the national interest.

Public notice of this determination is ordered to be published in the **Federal Register.**

Dated: June 22, 1987.

John A. Lindburg,
Acting General Counsel.
[FR Doc. 87-14442 Filed 6-24-87; 8:45 am]
BILLING CODE 8230-01-M

[1] A copy of this list may be obtained by contacting Mr. John Lindburg of the Office of the General Counsel of USIA. The telephone number is 202-485-7976, and the address is Room 700, U.S. Information Agency, 301 4th Street SW., Washington, DC 20547.

Grants Program for Private Not-For-Profit Organizations in Support of International Educational and Cultural Activities

The United States Information Agency (USIA) announces a program of selective assistance and limited grant support to non-profit activities of United States institutions and organizations in the Private Sector. The primary purpose of the program is to enhance the achievement of the Agency's international public diplomacy goals and objectives by stimulating and encouraging increased private sector commitment, activity, and resources. The information collection involved in this solicitation is covered by OMB Clearance Number 3116-0175, entitled "A Grants Program for Private, Non-Profit Organizations in Support of International Educational and Cultural Activities," announced in the **Federal Register** June 3, 1987.

Private sector organizations interested in working cooperatively with USIA on the following concept are encouraged to so indicate:

Congress-to-Congress: An Inter-American Exchange

The Office of Private Sector Programs will assist in supporting an intensive 17-day "Congress-to-Congress" workshop that will bring ten young Latin American legislative leaders from newly emergent democracies to the U.S. to gain a better understanding of the U.S. Congress and its role in the U.S. political process. The Latin American participants will be selected by USIA representatives abroad. The project, slated for fall 1987, should be conducted primarily in Washington, DC, although a stay at a second locale would also be encouraged. The project will be conceived and executed by a U.S. not-for-profit institution with expertise in the field of American political and legislative processes. The program design should include substantive meetings with elected representatives, committee leaders and staff members as well as in-depth examination of the legislative issues most relevant to the interests of the visiting Latin American legislators.

USIA is most interested in working with organizations that show promise for innovative and cost-effective programming; and with organizations that have potential for obtaining third-party private-sector funding in addition to USIA support. Organizations must have the substantive expertise and logistical capability needed to successfully develop and conduct the above project and should also demonstrate a potential for designing programs which will have a lasting impact on their participants.

Your submission of a letter indicating interest in the above project concept begins the consultative process. To be eligible for consideration, organizations *must* postmark their general letter of interest within 15 days of the date of this notice.

This is not a solicitation for grant proposals. After consultation, selected organizations will be invited to prepare proposals for the financial assistance available.

Office of Private Sector Programs, Bureau of Educational and Cultural Affairs, (ATTN: Initiative Programs), United States Inforamtion Agency, 301 4th Street SW., Washington, DC 20547.

Dated: June 12, 1987.

Robert Francis Smith,
Director, Office of Private Sector Programs.
[FR Doc. 87-14417 Filed 6-24-87; 8:45 am]
BILLING CODE 8230-01-M

VETERANS ADMINISTRATION

Station Committee on Educational Allowances; Meeting

Notice is hereby given pursuant to Section V. Review Procedure and Hearing Rules, Station Committee on Educational Allowances, that a hearing is scheduled for June 24, 1987 at 1:00 pm. at the Denver Regional Office for Station Committee on Educational Allowances, in the Adjudication Hearing room, Room 504, of the Denver Veterans Administration Regional Office, 44 Union Boulevard, Denver, Colorado, to determine whether Veterans Administration benefits for all eligible persons enrolled in the Tractor Trailer Driver, Cutting and Boning Supervisor, Light Truck Driver, Warehouse Supervisor, Credit and Collections Manager, Coin Machine Service Repairs. Computer Operators, Food Products Sales Representative, Diesel Mechanic and Shipping and Receiving Clerk Training Program,

should be discontinued as provided in 38 CFR 21.4134, because a requirement of the law is not being met or a provision of the law has been violated. All interested persons shall be permitted to attend, appear before, or file statements with the committee at that time and place.

Dated: June 17, 1987.

Donald M. Twitty,

Director, VA Regional Office, 44 Union Boulevard, Box 25126, Denver, CO 80225.

[FR Doc. 87-14425 Filed 6-24-87; 8:45 am]

BILLING CODE 8320-01-M

Sunshine Act Meetings

Federal Register
Vol. 52, No. 122
Thursday, June 25, 1987

This section of the FEDERAL REGISTER contains notices of meetings published under the "Government in the Sunshine Act" (Pub. L. 94-409) 5 U.S.C. 552b(e)(3).

NATIONAL MEDIATION BOARD

TIME AND DATE: 2:00 p.m., Wednesday, July 8, 1987.

PLACE: Board Hearing Room, 8th Floor, 1425 K Street, NW., Washington, DC.

STATUS: Open.

MATTERS TO BE CONSIDERED:

1. Ratification of the Board actions taken by notation voting during the month of June, 1987.
2. Other priority matters which may come before the Board for which notice will be given at the earliest practicable time.

SUPPLEMENTARY INFORMATION: Copies of the monthly report of the Board's notation voting actions will be available from the Executive Director's office following the meeting.

CONTACT PERSON FOR MORE INFORMATION: Mr. Charles R. Barnes, Executive Director, Tel: (202) 523-5920.

Date of Notice: June 19, 1987.

Charles R. Barnes,

Executive Director, National Mediation Board.

[FR Doc. 87-14487 Filed 6-23-87; 9:19 am]

BILLING CODE 7550-01-M

PACIFIC NORTHWEST ELECTRIC POWER AND CONSERVATION PLANNING COUNCIL

ACTION: Notice of meeting to be held pursuant to the Government in the Sunshine Act (5 U.S.C. 552b).

STATUS: Open.

TIME AND DATE: June 29, 1987, 1:30 p.m.

PLACE: Council's Central Office, 850 SW. Broadway, Suite 1100, Portland, Oregon.

MATTERS TO BE CONSIDERED: The Northwest Power Planning Council hereby announces a forthcoming consultation to discuss the system planning draft work plan.

FOR FURTHER INFORMATION CONTACT: Mr. John Marsh at (503) 222-5161.

Edward Sheets,

Executive Director.

[FR Doc. 87-14530 Filed 6-23-87; 12:09 pm]

BILLING CODE 0000-00-M

POSTAL RATE COMMISSION

TIME AND DATE: 10:30 a.m. on Tuesday, June 30, 1987.

PLACE: Conference Room, 1333 H Street, NW., Suite 300, Washington, DC.

STATUS: Open.

MATTERS TO BE CONSIDERED: For the election of a Vice Chairman.

CONTACT PERSON FOR MORE INFORMATION: Charles L. Clapp, Secretary, Postal Rate Commission Room 300, 1333 H Street, NW., Washington, DC 20268-0001, Telephone (202) 789-6840.

Charles L. Clapp,

Secretary.

[FR Doc. 87-14488 Filed 6-23-87; 9:33 am]

BILLING CODE 7715-01-M

POSTAL SERVICE MEETING

The Board of Governors of the United States Postal Service, pursuant to its Bylaws (39 CFR 7.5) and the Government in the Sunshine Act (5 U.S.C. 552b), hereby gives notice that it intends to hold a meeting at 8:30 a.m. on Tuesday, July 7, 1987, in the Benjamin Franklin Room, U.S. Postal Service Headquarters, 475 L'Enfant Plaza, SW., Washington, DC. The meeting is open to the public. The Board expects to discuss the matters stated in the agenda which is set forth below. Requests for information about the meeting should be addressed to the Secretary of the Board, David F. Harris, at (202) 268-4800.

There will also be a session of the Board on Monday, July 6, 1987, but it will consist entirely of briefings and is not open to the public.

Agenda

Tuesday Session

July 7, 1987—8:30 a.m. (Open)

1. Minutes of the Previous Meeting, June 1-2, 1987.
2. Remarks of the Postmaster General.
3. Status of CSRS/FERS Retirement Programs.
4. Briefing on ODIS.
5. Report by Audit Committee.
6. Capital Investment: Window Automation.
7. Consideration of Code of Ethical Conduct for Postal Service Governors.
8. Consideration of Postal Rate Commission Recommended Decision on "Extension of Collect-on-Delivery Services, 1987."
9. Report on Operations Support Group Programs.
10. Tentative Agenda for August 3-4, 1987, Meeting in Denver, Colorado.

David F. Harris,

Secretary.

[FR Doc. 87-14523 Filed 6-23-87; 12:15 pm]

BILLING CODE 7710-12-M

RAILROAD RETIREMENT BOARD

Public Meeting

Notice is hereby given that the Railroad Retirement Board will hold a meeting on July 1, 1987, 9:30 a.m., at the Board's meeting room on the 8th floor of its headquarters building, 844 North Rush Street, Chicago, Illinois 60611. The agenda for this meeting follows:

(1) Final Rule Regulation on Primary Insurance Amount Determinations
(2) Proposed Amendments to Parts 320 and 340 of the Board's Regulations
(3) Amendment of Consolidated Board Order 75-5
(4) Proposed Changes in the RUIA Regulations
(5) Appeal of Alexander Zelinsky of the Service and Compensation Credited Under the Railroad Retirement and Railroad Unemployment Insurance Acts
(6) Recommendation to Close the Gallup Base Point
(7) Contract To Drop File Backlogged Correspondence at Ford City
(8) Proposed Regulations Implementing the Program Fraud Civil Remedies Act of 1986 (PFCRA)
(9) Board Orders 75-1 and 75-3

The entire meeting will be open to the public. The person to contact for more information is Beatrice Ezerski, Secretary to the Board, COM No. 312-751-4920, FTS No. 386-4920.

Dated: June 22, 1987.

Beatrice Ezerski,

Secretary to the Board.

[FR Doc. 87-14557 Filed 6-23-87; 3:08 pm]

BILLING CODE 7905-01-M

Corrections

Federal Register
Vol. 52, No. 122
Thursday, June 25, 1987

This section of the FEDERAL REGISTER contains editorial corrections of previously published Presidential, Rule, Proposed Rule, and Notice documents and volumes of the Code of Federal Regulations. These corrections are prepared by the Office of the Federal Register. Agency prepared corrections are issued as signed documents and appear in the appropriate document categories elsewhere in the issue.

ENVIRONMENTAL PROTECTION AGENCY

21 CFR Parts 193 and 561

[FAP 7H5518/R889; FRL 3200-9]

Pesticides Tolerances in Foods; Avermectin B_1

Correction

In the issue of Wednesday, June 17, 1987, on page 23137, in the first column, in the correction of rule document 87-11032, a portion of the text that appeared is inaccurate and is corrected as follows:

In paragraph 1, in the sixth line, "≥" should read "≤".

BILLING CODE 1505-01-D

ENVIRONMENTAL PROTECTION AGENCY

40 CFR Part 180

[OPP-300163; FRL-3196-3]

Raw Agricultural Commodities; Definitions and Interpretations

Correction

In proposed rule document 87-10266 beginning on page 16880 in the issue of Wednesday, May 6, 1987, make the following correction:

§ 180.275 [Corrected]

On page 16882, in the third column, in the heading for § 180.275 and in § 180.275(b), in the fourth line, "Chlorothalonil" was misspelled.

BILLING CODE 1505-01-D

ENVIRONMENTAL PROTECTION AGENCY

[OPP-240074; FRL-3195-2]

State Registration of Pesticides

Correction

In notice document 87-10135 beginning on page 16903 in the issue of Wednesday, May 6, 1987, make the following corrections:

1. On page 16903, in the first column, under **FOR FURTHER INFORMATION CONTACT**, the contact person's name should read "Owen F. Beeder".
2. On page 16904, in the first column, in the entry for Michigan, in the fifth line, "armworms" should read "armyworms"; at the end of the same entry, insert "December 26, 1986.".

BILLING CODE 1505-01-D

federal register

Thursday
June 25, 1987

Part II

Office of Management and Budget

Proposed Revisions to Circular A-120 "Guidelines for the Use of Consulting Services"; Notice

OFFICE OF MANAGEMENT AND BUDGET

Proposed Revisions to Circular A-120 "Guidelines for the Use of Consulting Services"

AGENCY: Office of Management and Budget.

SUMMARY: This notice offers interested parties an opportunity to comment on proposed revisions to Circular A-120 "Guidelines for the Use of Consulting Services."

The revisions implement certain recommendations made by the Cabinet Council on Administration in 1984 after a study initiated in response to reports of abuses of consulting services by Federal departments and agencies.

The study found that in several major categories of such services, "at least 40 percent of the contracts are awarded on a cost or non-competitive basis or are extensions of existing contracts (also without competitive bidding). In the largest category, R&D Engineering and Operational Systems Development, 72 percent of the contracts were awarded on a non-competitive basis, 68 percent were modifications, and 52 percent were cost basis contracts." The study also found that while all agencies had some control system in place, all but two fell short of optimum known systems.

The revisions were prepared by an ad hoc committee of the President's Council on Management Improvement. The committee was chaired by the Office of Management and Budget and comprised of Assistant Secretaries for Management, or equivalent, of the Departments of Defense, Health and Human Services, Commerce, and Energy as well as the General Services Administration.

The major changes would: (1) Broaden the coverage of the Circular, principally by adding direct assistance services and defense-oriented engineering and technical services; (2) require the designation of a single official by each agency to be responsible and accountable for assuring that the provisions of the circular are met; (3) require each agency to maintain or establish—if such a system does not already exist—an accounting or information system to effectively monitor and report these activities; and (4) eliminate any confusion between Circulars A-120 and A-76 by exempting A-76 transactions from the control system.

The revisions would not require any agency to: (1) Create or maintain a duplicative control/monitoring/reporting system; or (2) adopt any additional controls if presently in compliance with the Federal Acquisition Regulations.

The revisions would permit agencies to expand the required coverage and/or adopt additional controls if they felt their particular circumstances required additional efforts.

Comments should be submitted in duplicate to: Government Operations Division, Office of Management and Budget, Room 10208, New Executive Office Building, Washington, DC 20503.

All comments should be received within 30 days of the publication of this notice.

FOR FURTHER INFORMATION CONTACT: Oliver Taylor, Government Operations Division, Office of Management and Budget, (202) 395-6911.

Executive Office of the President—Circular A-120 Guidelines for the Use of Advisory and Assistance Services

1. *Purpose.* This Circular establishes policy, assigns responsibilities, and sets guidelines to be followed by executive branch agencies in determining and controlling the appropriate use of advisory and assistance services obtained from individuals and organizations. This Circular revises OMB Circular No. A-120 "Guidelines for the Use of Consulting Services," dated April 14, 1980.

2. *Background.* OMB Bulletin No. 78-11, issued May 5, 1978, first required agencies to apply extra controls to the procurement of consultant services. Circular A-120, dated April 14, 1980, provided permanent guidance in lieu of the interim guidance provided by the Bulletin. A Model Control System for consulting services was issued on January 15, 1982, to provide further guidance, which was non-mandatory.

In 1984, the Cabinet Council on Management and Administration (CCMA) completed a study of consulting services to estimate expenditures, review definitions and existing controls, and propose reforms. The study resulted from continuing reports, by GAO and other agencies, of problems in the way the Government manages and uses consulting services.

This revision of Circular A-120 is being issued (1) to expand the coverage of the Circular; (2) to mandate controls for the management and reporting of advisory and assistance services; and (3) to clarify the relationship between Circular A-120 and OMB Circular No. A-76 (Revised) "Performance of Commercial Activities," issued August 4, 1983.

3. *Relationship to OMB Circular A-76.* Contracts entered into as a result of A-76 processes are exempt from the provisions of this Circular. When such contracts are renewed, if the functions performed by the contractor meet the definition of advisory and assistance services contained in this Circular, the provisions of this Circular shall apply.

4. *Coverage.* The provisions of this Circular apply to advisory and assistance services obtained by the following arrangements:

A. Personnel appointment;

B. Procurement contract; and

C. Advisory committee membership.

5. *Definition.* Advisory and Assistance Services are those services acquired from non-governmental sources by contract or by personnel appointment to support or improve agency policy development, decision-making, management, and administration, or to support or improve the operation of hardware and related software systems. Such services may take the form of information, advice, opinions, alternatives, conclusions, recommendations, training, and direct assistance. Advisory and assistance services include consultant services provided by individuals, as defined in the Federal Personnel Manual, Chapter 304.

A. Advisory and assistance services include activities having any of the following characteristics:

(1) *Individual Experts and Consultants.* Individual experts and consultants are persons possessing special, current knowledge or skill which may be combined with extensive operational experience. This enables them to provide information, opinions, advice, or recommendations to enhance understanding of complex issues or to improve the quality and timeliness of policy development or decision-making. These named individuals may either work independently or be assembled into panels, commissions, or committees.

(2) *Studies, Analyses, and Evaluations.* Studies, analyses, and evaluations are organized, analytic assessments needed to provide the insights necessary for understanding complex issues or improving policy development or decision-making. These analytic efforts result in formal, structured documents containing data or leading to conclusions and/or recommendations. This summary description is operationally defined by the following criteria:

a. *Objective:* To enhance understanding of complex issues or to improve the quality and timeliness of agency policy development or decision-making by providing new insights into, understanding of, alternative solutions

to, or recommendations on agency policy and program issues, through the application of fact finding, analysis, and evaluation.

b. *Areas of application:* All subjects, issues, or problems involving policy development or decision-making in the agency. These may involve concepts, organizations, programs and other systems, and the application of such systems.

c. *Outputs:* Outputs are formal, structured documents containing or leading to conclusions and/or recommendations. Data bases, models, methodologies, and related software created in support of a study, analysis, or evaluation are to be considered part of the overall study effort.

d. *Exclusions and exemptions:* A complete list of exclusions and exemptions from the provisions of this Circular is attached.

(3) *Management and Professional Support Services.* Management and professional support services take the form of advice, training or direct assistance for organizations to ensure more efficient or effective operations of managerial, administrative, or related systems. This summary description is operationally defined in terms of the following criteria:

a. *Objective:* To ensure more efficient or effective operation of management support or related systems by providing advice, training, or direct assistance associated with the design or operation of such systems.

b. *Areas of application:* Management support or related systems such as program management, project monitoring and reporting, data collection, logistics management, budgeting, accounting, auditing, personnel management, paperwork management, records management, space management, and public relations.

c. *Outputs:* Services in the form of information, opinions, advice, training, or direct assistance that lead to the improved design or operation of managerial, administrative, or related systems. Written reports are normally incidental to the performance of the service.

d. *Exclusions and exemptions:* A complete list of exclusions and exemptions from the provisions of this Circular is attached.

(4) *Engineering and Technical Services.* Engineering and technical services (technical representatives) take the form of advice, training, or under unusual circumstances, direct assistance to ensure more efficient or effective operation or maintenance of existing platforms, weapon systems, related systems, and associated software. All engineering and technical services provided prior to final Government acceptance of a complete "hardware system" are part of the normal development, production, and procurement processes and do not fall within the meaning of this category. Engineering and technical services provided after final Government acceptance of a complete hardware system are within the meaning of this category except where they are procured to increase the original design performance capabilities of existing or new systems or where they are integral to the operational support of a deployed system and have been formally reviewed and approved in the acquisition planning process.

6. *Exclusions.* The attachment lists the Government programs and activities that are excluded from the provisions of this Circular unless agencies decide to include them (see section 8A below).

7. *Policy.*

A. When essential to the mission of the agency, the proper use of advisory and assistance services is a legitimate way to:

(1) Obtain outside points of view to avoid too limited judgement on significant issues;

(2) Obtain advice regarding developments in industry, university or foundation research;

(3) Obtain the opinions, special knowledge, or skills of noted experts whose national or international prestige can contribute to the success of important projects;

(4) Enhance the understanding of, and develop alternative solutions to, complex issues;

(5) Support and improve the operation of organizations;

(6) Ensure the more efficient or effective operation of managerial or hardware systems; and

(7) Secure citizen advisory participation in developing or implementing Government programs that, by their nature or by statutory provision, call for such participation.

B. Advisory and assistance services shall not be:

(1) Used in performing work of a policy, decision-making, or managerial nature which is the direct responsibility of agency officials;

(2) Used to bypass or undermine personnel ceilings, pay limitations, or competitive employment procedures;

(3) Awarded on a preferential basis to former Government employees;

(4) Used under any circumstances specifically to aid in influencing or enacting legislation;

(5) Procured through grants and cooperative agreements; and

(6) Obtained for professional or technical advice which is readily available within the agency or another Federal agency, except when the contract is entered into pursuant to the procedures and provisions of Circular A-76.

C. No contracts for advisory and assistance services may be continued longer than five years without recompetition.

8. *Management Controls.* A. Each agency will assure that it maintains an accounting or information system which effectively monitors and reports advisory and assistance service activities.

B. Each agency's management control system for advisory and assistance services shall at a minimum comply with the Federal Acquisition Regulations. Agencies are encouraged to apply the same control system to other procurements which in their judgment require similar management attention, notwithstanding the exclusion of those functions or programs from the provisions of this Circular.

C. Each agency will assure that for all advisory and assistance service arrangements:

(1) The elements of the management control system required by this Circular have been observed, and all procurements under this Circular are administered in accordance with the requirements of the Federal Acquisition Regulations;

(2) As prescribed by the Federal Acquisition Regulations, written approval of all advisory and assistance services arrangements will be required at a level above the organization sponsoring the activity. Additionally, written approval for all advisory and assistance service arrangements during the fourth fiscal quarter will be required at the second level or higher above the organization sponsoring the activity;

(3) Every requirement is appropriate and fully justified in writing. Such justification will provide a statement of need and will certify that such services do not unnecessarily duplicate any previously performed work or services;

(4) Work statements are specific, complete, and specify a fixed period of performance for the service to be provided;

(5) Contracts for advisory and assistance services are competitively awarded and conform to the Competition in Contracting Act of 1984;

(6) Appropriate disclosure is required of, and warning provisions are given to, the performer(s) to avoid conflict of interest;

(7) Advisory and assistance service arrangements are properly administered and monitored to ensure that performance is satisfactory;

(8) The service is properly evaluated at the conclusion of the arrangement to assess its utility to the agency and the performance of the contractor; and

(9) To the extent practicable, contracts for these services require a written report. Such reports typically would document the services delivered and may, in part, take the form of software packages.

D. Delegations of Authority.

(1) Each agency head shall designate a single official reporting directly to him or her who shall be responsible and accountable for assuring that the acquisition of advisory and assistance services meets the provisions contained in this Circular. The single official shall have minimum responsibility for the procurement of such services.

(2) Each agency will establish specific levels of delegation of authority to approve the need for advisory and assistance services based on the policy and guidelines contained in this Circular. The senior official shall review each advisory and assistance services request which exceeds an amount to be determined by the agency.

E. OMB Circular No. A-63 "Advisory Committee Management," governs policy and procedures regarding advisory committees and their membership, and inlcudes provisions for the procurement of advisory and assistance services.

F. The Federal Personnel Manual, Chapter 304, governs policy and procedures regarding personnel appointments.

G. The Federal Acquisition Regulation governs policy and procedures regarding contracts.

9. *Data Requirements.* A. Advisory and assistance services, as defined in this Circular, shall be reported to the Federal Procurement Data System (FPDS) using the "Yes/No" indicator in item 14, "Advisory and Assistance Services Award" on the Individual Contract Action Report (SF 279).

B. Contract actions of $25,000 or less reported on the Summary Contract Action Report ($25,000 or less) (SF 281) are not covered by this reporting requirement.

C. The following data systems will continue to provide information on advisory and assistance service arrangements within the executive branch:

(1) Central Personnel Data File (CPDF), operated by the Office of Personnel Management, provides data on personnel appointments, segregating advisors, experts, and advisory committee members (as defined in OMB Circular A-63).

(2) The Federal Procurement Data System (FPDS) provides data on contract arrangements that are monitored by the management control system required by Section 8 of this Circular.

(3) Advisory committee data is provided in accordance with OMB Circular A-63.

10. *Effective Date.* This Circular is effective immediately.

11. *Implementation.* All agencies shall submit their implementing directives to OMB within ninety (90) days.

12. *Inquiries.* All questions or inquiries should be submitted to the Office of Management and Budget. Telephone number (202) 395-6903.

James C. Miller III,

Director.

Attachment—Exclusions

I. The following activities are excluded from the purview of Circular A-120.

1. Contracts entered into as a result of A-76 processes. (When such contracts are renewed, if the functions performed by the contractor meet the definition of advisory and assistance services contained in this Circular, the provisions of this Circular apply.)

2. Architectural and engineering services of construction and construction management services.

3. ADP/Telecommunications and related services controlled in accordance with 41 CFR 201, the Federal Information Resource Management Regulations.

4. Research on theoretical mathematics and basic medical, biological, physical, social, psychological or other phenomena.

5. Engineering studies related to specific physical or performance characteristics of existing or proposed systems.

6. The day-to-day operation facilities, (e.g., the Johnson Space Center, and related facilities.)

7. Government-owned, contractor operated facilities (GOCOs) (e.g., Oakridge National Laboratory, the Holstan Army Ammunition Plant in Kingsport, Tennessee). Any contract for a GOCO shall come under the provisions of this Circular.

8. Clinical medicine.

9. Those support services of a managerial or administrative nature performed as a simultaneous part of, and non-separable from, specific development, production, or operational support activities. In this context, non-separable means that the managerial or administrative systems in question (e.g., subcontractor monitoring or configuration control) cannot reasonably be operated by anyone other than the designer or producer of the end-item hardware.

10. Contracts entered into in furtherance of statutorily mandated advisory committees.

11. Initial training, training aids, and technical documentation acquired as an integral part of the lease or purchase of equipment.

12. Routine maintenance of equipment, routine administrative services (e.g., mail, reproduction, telephone), printing services, and direct advertising (media) costs.

13. Auctioneers, realty-brokers, appraisers, and surveyors.

II. The following programs are excluded from the purview of Circular A-120.

1. The National Foreign Intelligence Program (NFIP).

2. The General Defense Intelligence Program (GDIP).

3. Tactical Intelligence and Related Activities (TIARA).

4. Federally Funded Research and Development Centers, (FFRDCs) except for any services provided to agencies other than the sponsoring agency.

5. Foreign Military Sales.

[FR Doc. 87-14413 Filed 6-24-87; 8:45 am]

BILLING CODE 3110-01-M

federal register

Thursday
June 25, 1987

Part III

Environmental Protection Agency

Monthly Status Report for January 1987; Premanufacture Notices

ENVIRONMENTAL PROTECTION AGENCY

[OPTS-53093; FRL 3216-8]

Premanufacture Notices Monthly Status Report for January 1987

AGENCY: Environmental Protection Agency (EPA).

ACTION: Notice.

SUMMARY: Section 5(d)(3) of the Toxic Substances Control Act (TSCA) requires EPA to issue a list in the **Federal Register** each month reporting the premanufacture notices (PMNs) and exemption requests pending before the Agency and the PMNs and exemption requests for which the review period has expired since publication of the last monthly summary. This is the report for January 1987.

Nonconfidential portions of the PMNs and exemption requests may be seen in the Public Reading Room NE-G004 at the address below between 8:00 a.m. and 4:00 p.m., Monday thru Friday, excluding legal holidays.

ADDRESS: Written comments, identified with the document control number "[OPTS-53093]" and the specific PMN and exemption request number should be sent to: Document Processing Center (TS-790), Office of Toxic Substances, Environmental Protection Agency, Rm. L-100, 401 M Street, SW., Washington, DC 20460, (202) 554-1305.

FOR FURTHER INFORMATION CONTACT: Stephanie Roan, Premanufacture Notice Management Branch, Chemical Control Division (TS-794), Office of Toxic Substances, Environmental Protection Agency, Rm. E-613, 401 M Street, SW., Washington, DC 20460, (202) 382-3725.

SUPPLEMENTARY INFORMATION: The monthly status report published in the **Federal Register** as required under section 5(d)(3) of TSCA (90 Stat. 2012 (15 U.S.C. 2504)), will identify: (a) PMNs received during January (b) PMNs receive previously and still under review at the end of January (c) PMNs for which the notice review period has ended during January (d) chemical substances for which EPA has received a notice of commencement to manufacture during January and (e) PMNs for which the review period has been suspended. Therefore, the January 1987 PMN Status Report is being published.

Dated: April 27, 1987.

Linda K. Smith,

Acting Director, Information Management Division.

Premanufacture Notices Monthly Status Report, January 1987

I. 135 Premanufacture Notices and Exemption Requests Received During the Month

PMN No.	
P 87-414	P 87-482
P 87-415	P 87-483
P 87-416	P 87-484
P 87-417	P 87-485
P 87-418	P 87-486
P 87-419	P 87-487
P 87-420	P 87-488
P 87-421	P 87-489
P 87-422	P 87-490
P 87-423	P 87-491
P 87-424	P 87-492
P 87-425	P 87-493
P 87-426	P 87-494
P 87-427	P 87-495
P 87-428	P 87-496
P 87-429	P 87-497
P 87-430	P 87-498
P 87-431	P 87-499
P 87-432	P 87-500
P 87-433	P 87-501
P 87-434	P 87-502
P 87-435	P 87-503
P 87-436	P 87-504
P 87-437	P 87-505
P 87-438	P 87-506
P 87-439	P 87-507
P 87-440	P 87-508
P 87-441	P 87-509
P 87-442	P 87-510
P 87-443	P 87-511
P 87-444	P 87-512
P 87-445	P 87-513
P 87-446	P 87-514
P 87-447	P 87-515
P 87-448	P 87-516
P 87-449	P 87-517
P 87-450	P 87-518
P 87-451	P 87-519
P 87-452	P 87-520
P 87-453	P 87-521
P 87-454	P 87-522
P 87-455	P 87-523
P 87-456	P 87-524
P 87-457	P 87-525
P 87-458	P 87-526
P 87-459	P 87-527
P 87-460	P 87-528
P 87-461	P 87-529
P 87-462	P 87-530
P 87-463	P 87-531
P 87-464	P 87-706
P 87-465	Y 87-84
P 87-466	Y 87-85
P 87-467	Y 87-86
P 87-468	Y 87-87
P 87-469	Y 87-88
P 87-470	Y 87-89
P 87-471	Y 87-90
P 87-472	Y 87-91
P 87-473	Y 87-92
P 87-474	Y 87-93
P 87-475	Y 87-94
P 87-476	Y 87-95
P 87-477	Y 87-96
P 87-478	Y 87-97
P 87-479	Y 87-98
P 87-480	Y 87-99
P 87-481	

II. 122 Premanufacture Notices Received Previously and Still Under Review at the End of the Month

PMN NO.	
P 87-285	P 87-346
P 87-286	P 87-347
P 87-287	P 87-348
P 87-288	P 87-349
P 87-289	P 87-350
P 87-290	P 87-351
P 87-291	P 87-352
P 87-292	P 87-353
P 87-293	P 87-354
P 87-294	P 87-355
P 87-295	P 87-356
P 87-296	P 87-357
P 87-297	P 87-358
P 87-298	P 87-359
P 87-299	P 87-360
P 87-300	P 87-361
P 87-301	P 87-362
P 87-302	P 87-363
P 87-303	P 87-364
P 87-304	P 87-365
P 87-305	P 87-366
P 87-306	P 87-367
P 87-307	P 87-368
P 87-308	P 87-369
P 87-309	P 87-370
P 87-310	P 87-371
P 87-311	P 87-372
P 87-312	P 87-373
P 87-313	P 87-374
P 87-314	P 87-375
P 87-315	P 87-376
P 87-316	P 87-377
P 87-317	P 87-378
P 87-318	P 87-379
P 87-319	P 87-380
P 87-320	P 87-381
P 87-321	P 87-382
P 87-322	P 87-383
P 87-323	P 87-384
P 87-324	P 87-385
P 87-325	P 87-386
P 87-326	P 87-387
P 87-327	P 87-388
P 87-328	P 87-389
P 87-329	P 87-390
P 87-330	P 87-391
P 87-331	P 87-392
P 87-332	P 87-393
P 87-333	P 87-394
P 87-334	P 87-395
P 87-335	P 87-396
P 87-336	P 87-397
P 87-337	P 87-398
P 87-338	P 87-399
P 87-339	P 87-400
P 87-340	P 87-401
P 87-341	P 87-402
P 87-342	P 87-403
P 87-343	P 87-404
P 87-344	P 87-405
P 87-345	P 87-406

III. 153 Premanufacture Notices and Exemption Requests for Which the Notice Review Period has Ended During the Month. (Expiration of the Notice Review Period Does not Signify That the Chemical had Been Added to the Inventory).

PMN NO.

P 87-20
P 87-21
P 87-22
P 87-23
P 87-24
P 87-25
P 87-26
P 87-27
P 87-28
P 87-29
P 87-30
P 87-31
P 87-32
P 87-33
P 87-34
P 87-35
P 87-36
P 87-37
P 87-38
P 87-39
P 87-40
P 87-41
P 87-42
P 87-44
P 87-45
P 87-46
P 87-47
P 87-48
P 87-49
P 87-50
P 87-51
P 87-52
P 87-53
P 87-54
P 87-55
P 87-56
P 87-57
P 87-58
P 87-59
P 87-60
P 87-61
P 87-62
P 87-63
P 87-64
P 87-65
P 87-66
P 87-67
P 87-68
P 87-69
P 87-70
P 87-71
P 87-72
P 87-73
P 87-74
P 87-75
P 87-76
P 87-77
P 87-78
P 87-79
P 87-80
P 87-81
P 87-82
P 87-83
P 87-84
P 87-85
P 87-86
P 87-87
P 87-88
P 87-89
P 87-90
P 87-91
P 87-92
P 87-93
P 87-94
P 87-95
P 87-96
P 87-97
P 87-98
P 87-99
P 87-100
P 87-101
P 87-102
P 87-103
P 87-104
P 87-105
P 87-106
P 87-107
P 87-108
P 87-109
P 87-110
P 87-111
P 87-112
P 87-113
P 87-114
P 87-115
P 87-116
P 87-117
P 87-118
P 87-119
P 87-120
P 87-121
P 87-122
P 87-123
P 87-124
P 87-125
P 87-126
P 87-127
P 87-128
P 87-129
P 87-130
P 87-131
P 87-132
P 87-133
P 87-134
P 87-135
P 87-136
P 87-137
P 87-138
P 87-139
P 87-140
P 87-141
P 87-142
P 87-143
P 87-144
P 87-145
P 87-146
P 87-147
Y 87-58
Y 87-59
Y 87-60
Y 87-61
Y 87-62
Y 87-63
Y 87-64
Y 87-65
Y 87-66
Y 87-67
Y 87-68
Y 87-69
Y 87-70
Y 87-71
Y 87-72
Y 87-73
Y 87-74
Y 87-75
Y 87-76
Y 87-77
Y 87-78
Y 87-79
Y 87-80
Y 87-81
Y 87-82
Y 87-83

IV. 36 Chemical Substances for Which EPA has Received Notices of Commencement to Manufacture

PMN No.	Identity/generic name	Date of commencement
P 80-42	Generic name: Alpha alkene copolymer with alpha alkene	Nov. 19, 1986.
P 84-14	Generic name: Polyurethane prepolymer resin	Dec. 12, 1986.
P 85-534	Generic name: Alkyl sulfonate	Dec. 29, 1986.
P 85-680	Generic name: 1,1-Dimethylpropyl peroxyester	Mar. 18, 1986.
P 85-906	Generic name: Polymer reacted by a poly(aliphatic) iso cyanate	Dec. 15, 1986.
P 86-61	Generic name: Hydrocarbon resin	Nov. 10, 1986.
P 86-81	Generic name: Disubstituted sulfamoylcarbomonocycle azo substituted naphthalene sulfonic acid, substituted alkylamine salt.	Nov. 26, 1986.
P 86-82	Generic name: Disubstituted sulfamoylcarbomonocycle azo substituted naphthalene sulfonic acid, salt	Do.
P 86-310	Generic name: Organophilic ester-humic acid derivative	Dec. 22, 1986.
P 86-537	Generic name: Substituted phenylpyrazolone	Dec. 18, 1986.
P 86-542	N-nitrosophenylhydroxylamine, ethanolamine salt	Dec. 5, 1986.
P 86-628	Unsaturated dimer acids, polyester, epoxidized	Nov. 23, 1986.
P 86-842	Generic name: Styrene-2-ethylhexylacrylate copolymer	Nov. 28, 1986.
P 86-1032	Generic name: Functionalized acrylic-vinylaromatic copolymer	Nov. 19, 1986.
P 86-1115	Generic name: Alkyl aryl sulfonic acid	Dec. 16, 1986.
P 86-1174	Generic name: Amino functional paintable silicone fluid	Nov. 21, 1986.
P 86-1263	Generic name: Sodium pyridine water	Dec. 16, 1986.
P 86-1310	Generic name: Phenolic modified rosin ester	Nov. 20, 1986.
P 86-1442	Generic name: Polyether aromatic urethane	Nov. 18, 1986.
P 86-1472	Generic name: Reaction product of an aromatic acid and an amine	Nov. 11, 1986.
P 86-1490	Generic name: Polyester of carbomonocyclic anhydrides, alkanediol acid neopentyl glycol and an alkyl diol	Nov. 25, 1986.
P 86-1494	Generic name: Acrylic solid grade polymer	Dec. 9, 1986.
P 86-1540	Generic name: Poly-(-caprolactonediol derivative of an alkyl diol, polymer with methylene bis(isocyanatobenzene) aromatic initiated (alkylene ether) glycol and alkanol.	Nov. 24, 1986.
P 86-1564	Generic name: Functional styrenated methacrylate acrylate	Dec. 5, 1986.
P 86-1579	Generic name: Alkylalkoxysilane	Do.

IV. 36 CHEMICAL SUBSTANCES FOR WHICH EPA HAS RECEIVED NOTICES OF COMMENCEMENT TO MANUFACTURE.—Continued

PMN No.	Identity/generic name	Date of commencement
P 86-1600	Alkyl naphthalene sulfonic acid, compound with amine	Dec. 9, 1986.
P 86-1642	Generic name: Hydroxy functional polyurethane	Dec. 22, 1986.
P 86-1678	Carahanaenone iso-carahanaeone methane triol	Dec. 16, 1986.
P 86-1679	Generic name: Hydroxy substituted p-methane ether	Do.
P 86-1681	Benzene, 1-(1-ethoxyethoxy)-2-methoxy-4-(1-propenyl)	Dec. 17, 1986.
Y 86-183	Generic name: Acrylic resin	Dec. 10, 1986.
Y 86-228	Generic name: Hydroxy functional styrenated acrylate methacrylate	Nov. 29, 1986.
Y 86-251	Generic name: Solvent-thinned alkyd resin	Oct. 9, 1986.
Y 87-14	Generic name: Polyester resin	Dec. 17, 1986.
Y 87-15	Generic name: Polyester resin	Do.
Y 87-39	Generic name: Tall oil alkyd resin	Dec. 8, 1986.

V. 14 PREMANUFACTURE NOTICES FOR WHICH THE PERIOD HAS BEEN SUSPENDED.

PMN NO.	
P 86-1189	P 87-200
P 87-10	P 87-201
P 87-50	P 87-353
P 87-68	P 87-354
P 87-105	P 87-355
P 87-133	P 87-356
P 87-147	P 87-534

[FR Doc. 87-13340 Filed 6-24-87; 8:45 a.m.]

BILLING CODE 6560-50-M

federal register

Thursday
June 25, 1987

Part IV

Environmental Protection Agency

Monthly Status Report for February 1987; Premanufacture Notices

ENVIRONMENTAL PROTECTION AGENCY

[OPTS-53094; FRL-3216]

Premanufacture Notices; Monthly Status Report for February 1987

AGENCY: Environmental Protection Agency (EPA).

ACTION: Notice.

SUMMARY: Section 5(d)(3) of the Toxic Substances Control Act (TSCA) requires EPA to issue a list in the **Federal Register** each month reporting the premanufacture notices (PMNs) and exemption requests pending before the Agency and the PMNs and exemption requests for which the review period has expired since publication of the last monthly summary. This is the report for February 1987.

Nonconfidential portions of the PMNs and exemption requests may be seen in the Public Reading Room NE-G004 at the address below between 8:00 a.m. and 4:00 p.m., Monday thru Friday, excluding legal holidays.

ADDRESS: Written comments, identified with the document control number "[OPTS-53094]" and the specific PMN and exemption request number should be sent to: Document Processing Center (TS-790), Office of Toxic Substances, Environmental Protection Agency, Room L-100, 401 M Street, SW., Washington, DC 20460, (202) 554-1305.

FOR FURTHER INFORMATION CONTACT: Stephanie Roan, Premanufacture Notice Management Branch, Chemical Control Division (TS-794), Office of Toxic Substances, Environmental Protection Agency, Room E-613, 401 M Street, SW., Washington, DC 20460, (202) 382-3725.

SUPPLEMENTARY INFORMATION: The monthly status report published in the **Federal Register**, as required under section 5(d)(3) of TSCA (90 Stat. 2012 (15 U.S.C. 2504)), will identify: (a) PMNs received during February; (b) PMNs receive previously and still under review at the end of February; (c) PMNs for which the notice review period has ended during February; (d) chemical substances for which EPA has received a notice of commencement to manufacture during February; and (e) PMNs for which the review period has been suspended. Therefore, the February 1987 PMN Status Report is being published.

Dated: May 21, 1987.

Denise Devoe,

Acting Director, Information Management Division.

Premanufacture Notices Monthly Status Report, February 1987

I. 207 Premanufacture Notices and Exemption Requests Received During the Month

PMM NO.	
P 87-532	P 87-595
P 87-533	P 87-596
P 87-534	P 87-597
P 87-535	P 87-598
P 87-536	P 87-599
P 87-537	P 87-600
P 87-538	P 87-601
P 87-539	P 87-602
P 87-540	P 87-603
P 87-541	P 87-604
P 87-542	P 87-605
P 87-543	P 87-606
P 87-544	P 87-607
P 87-545	P 87-608
P 87-546	P 87-609
P 87-547	P 87-610
P 87-548	P 87-611
P 87-549	P 87-612
P 87-550	P 87-613
P 87-551	P 87-614
P 87-552	P 87-615
P 87-553	P 87-616
P 87-554	P 87-617
P 87-555	P 87-618
P 87-556	P 87-619
P 87-557	P 87-620
P 87-558	P 87-621
P 87-559	P 87-622
P 87-560	P 87-623
P 87-561	P 87-624
P 87-562	P 87-625
P 87-563	P 87-626
P 87-564	P 87-627
P 87-565	P 87-628
P 87-566	P 87-629
P 87-567	P 87-630
P 87-568	P 87-631
P 87-569	P 87-632
P 87-570	P 87-633
P 87-571	P 87-634
P 87-572	P 87-635
P 87-573	P 87-636
P 87-574	P 87-637
P 87-575	P 87-638
P 87-576	P 87-639
P 87-577	P 87-640
P 87-578	P 87-641
P 87-579	P 87-642
P 87-580	P 87-643
P 87-581	P 87-644
P 87-582	P 87-645
P 87-583	P 87-646
P 87-584	P 87-647
P 87-585	P 87-648
P 87-586	P 87-649
P 87-587	P 87-650
P 87-588	P 87-651
P 87-589	P 87-652
P 87-590	P 87-653
P 87-591	P 87-654
P 87-592	P 87-655
P 87-593	P 87-656
P 87-594	P 87-657
P 87-658	P 87-699
P 87-659	P 87-700
P 87-660	P 87-701
P 87-661	P 87-702
P 87-662	P 87-703
P 87-663	P 87-704
P 87-664	P 87-705
P 87-665	P 87-706
P 87-666	P 87-707
P 87-667	P 87-708
P 87-668	P 87-709
P 87-669	P 87-710
P 87-670	P 87-711
P 87-671	P 87-712
P 87-672	P 87-713
P 87-673	P 87-714
P 87-674	P 87-715
P 87-675	P 87-716
P 87-676	P 87-717
P 87-677	P 87-718
P 87-678	P 87-719
P 87-679	Y 87-100
P 87-680	Y 87-101
P 87-681	Y 87-102
P 87-682	Y 87-103
P 87-683	Y 87-104
P 87-684	Y 87-105
P 87-685	Y 87-106
P 87-686	Y 87-107
P 87-687	Y 87-108
P 87-688	Y 87-109
P 87-689	Y 87-110
P 87-690	Y 87-111
P 87-691	Y 87-112
P 87-692	Y 87-113
P 87-693	Y 87-114
P 87-694	Y 87-115
P 87-695	Y 87-116
P 87-696	Y 87-117
P 87-697	Y 87-118
P 87-698	

II. 127 Premanufacture Notices Received Previously and Still Under Review at the End of the Month

PMN No.	
P 87-414	P 87-444
P 87-415	P 87-445
P 87-416	P 87-446
P 87-417	P 87-447
P 87-418	P 87-448
P 87-419	P 87-449
P 87-420	P 87-450
P 87-421	P 87-451
P 87-422	P 87-452
P 87-423	P 87-453
P 87-424	P 87-454
P 87-425	P 87-455
P 87-426	P 87-456
P 87-427	P 87-457
P 87-428	P 87-458
P 87-429	P 87-459
P 87-430	P 87-460
P 87-431	P 87-461
P 87-432	P 87-462
P 87-433	P 87-463
P 87-434	P 87-464
P 87-435	P 87-465
P 87-436	P 87-466
P 87-437	P 87-467
P 87-438	P 87-468
P 87-439	P 87-469
P 87-440	P 87-470
P 87-441	P 87-471
P 87-442	P 87-472
P 87-443	P 87-473

P 87-474
P 87-475
P 87-476
P 87-477
P 87-478
P 87-479
P 87-480
P 87-481
P 87-482
P 87-483
P 87-484
P 87-485
P 87-486
P 87-487
P 87-488
P 87-489
P 87-490
P 87-491
P 87-492
P 87-493
P 87-494
P 87-495
P 87-496
P 87-497
P 87-498
P 87-499
P 87-500
P 87-501
P 87-502
P 87-503
P 87-504
P 87-505
P 87-506
P 87-507
P 87-508
P 87-509
P 87-510
P 87-511
P 87-512
P 87-513
P 87-514
P 87-515
P 87-516
P 87-517
P 87-518
P 87-519
P 87-520
P 87-521
P 87-522
P 87-523
P 87-524
P 87-525
P 87-526
P 87-527
P 87-528
P 87-529
P 87-530
P 87-531

III. 169 Premanufacture Notices and Exemption Requests for Which the Notice Review Period Has Ended During the Month. (Expiration of the Notice Review Period Does Not Signify That the Chemical Had Been Added to the Inventory.)

P 86-649
P 86-1021
P 86-1098
P 86-1215
P 86-1252
P 86-1293

PMN No.

P 86-1619
P 86-1657
P 87-43
P 87-148
P 87-149
P 87-150
P 87-151
P 87-152
P 87-153
P 87-154
P 87-155
P 87-156
P 87-157
P 87-158
P 87-159
P 87-160
P 87-161
P 87-162
P 87-163
P 87-164
P 87-165
P 87-166
P 87-167
P 87-168
P 87-169
P 87-170
P 87-171
P 87-172
P 87-173
P 87-174
P 87-175
P 87-176
P 87-177
P 87-178
P 87-179
P 87-180
P 87-181
P 87-182
P 87-183
P 87-184
P 87-185
P 87-186
P 87-187
P 87-188
P 87-189
P 87-190
P 87-191
P 87-192
P 87-193
P 87-194
P 87-195
P 87-196
P 87-197
P 87-198
P 87-199
P 87-200
P 87-201
P 87-202
P 87-203
P 87-204
P 87-205
P 87-206
P 87-207
P 87-208
P 87-209
P 87-210
P 87-211
P 87-212
P 87-213
P 87-214
P 87-215
P 87-216
P 87-217
P 87-218
P 87-219
P 87-220
P 87-221
P 87-222
P 87-223
P 87-224
P 87-225
P 87-226
P 87-227
P 87-228
P 87-229
P 87-230
P 87-231
P 87-232
P 87-233
P 87-234
P 87-235
P 87-236
P 87-237
P 87-238
P 87-239
P 87-240
P 87-241
P 87-242
P 87-243
P 87-244
P 87-245
P 87-246
P 87-247
P 87-248
P 87-249
P 87-250
P 87-251
P 87-252
P 87-253
P 87-254
P 87-255
P 87-256
P 87-257
P 87-258
P 87-259
P 87-260
P 87-261
P 87-262
P 87-263
P 87-264
P 87-265
P 87-266
P 87-267
P 87-268
P 87-269
P 87-270
P 87-271
P 87-272
P 87-273
P 87-274
P 87-275
P 87-276
P 87-277
P 87-278
P 87-279
P 87-280
P 87-281
P 87-282
P 87-283
P 87-284
P 87-285
Y 87-84
Y 87-85
Y 87-86
Y 87-87
Y 87-88
Y 87-89
Y 87-90
Y 87-91
Y 87-92
Y 87-93
Y 87-94
Y 87-95
Y 87-96
Y 87-97
Y 87-98
Y 87-99
Y 87-100
Y 87-101
Y 87-102
Y 87-103
Y 87-104
Y 87-105

IV. 198 Chemical Substances for Which EPA Has Received Notices of Commencement To Manufacture

PMN No.	Identity/generic name	Date of commencement
P 81-50	Tall oil fatty acids, neopentyl glycol, trimethylolethane, isophthalic acid, benzoic acid	Mar. 18, 1983.
P 82-682	Generic name: Polyester from an alkanedioic acid, carbo-monocyclic anhydride and substituted alkane diols.	Jan. 14, 1983.
P 83-129	Syncrude (full range, dewaxed dearsinited shale oil)	Dec. 16, 1986.
P 83-130	Light straight run naphtha	Feb. 1, 1987.
P 83-131	Heavy straight run naphtha	Do.
P 83-132	Straight run middle distillate	Do.
P 83-133	Straight run gas oil	Do.
P 83-134	Atmospheric tower residuum	Do.
P 83-135	Vacuum tower condensate	Do.
P 83-136	Light vacuum gas oil	Do.
P 83-137	Heavy vacuum gas oil	Do.
P 83-138	Vacuum residuum	Do.
P 83-139	Full range catalytic cracked naphtha	Do.
P 83-140	Light catalytic cracked distillate	Do.
P 83-141	Catalytic cracked clarified oil	Do.
P 83-142	Catalytic cracked light olefins	Do.
P 83-143	Full range catalytic reformed naphtha	Do.
P 83-144	Full range alkylate naphtha	Do.
P 83-145	Light hydrocracked naphtha	Do.
P 83-146	Heavy hydrocracked naphtha	Do.
P 83-148	Light thermal cracked naphtha	Do.
P 83-149	Heavy thermal cracked naphtha	Do.
P 83-150	Light thermal cracked distillate	Do.
P 83-151	Heavy thermal cracked distillate	Do.

IV. 198 CHEMICAL SUBSTANCES FOR WHICH EPA HAS RECEIVED NOTICES OF COMMENCEMENT TO MANUFACTURE—Continued

PMN No.	Identity/generic name	Date of commencement
P 83-152	Coke	Do.
P 83-153	Sweetened naphtha	Do.
P 83-154	Hydrodesulfurized heavy naphtha	Do.
P 83-155	Hydrodesulfurized middle distillate	Do.
P 83-156	Full range straight run naphtha	Do.
P 83-157	Straight run kerosine	Do.
P 83-158	Light paraffinic distillate	Do.
P 83-159	Heavy paraffinic distillate	Do.
P 83-160	Light catalytic cracked naphtha	Do.
P 83-161	Heavy catalytic cracked naphtha	Do.
P 83-162	Intermediate catalytic cracked distillate	Do.
P 83-163	Heavy catalytic cracked distillate	Do.
P 83-164	Full range catalytic reformed naphtha	Do.
P 83-165	Light catalytic reformed naphtha	Do.
P 83-166	Heavy catalytic reformed naphtha	Do.
P 83-167	Catalytic reformer fractionator residue	Do.
P 83-168	Light alkylate naphtha	Do.
P 83-169	Heavy alkylate naphtha	Do.
P 83-170	Alkylate distillate	Do.
P 83-171	Polymerization naphtha	Do.
P 83-172	Viscous polymer	Do.
P 83-173	Isomerization naphtha	Do.
P 83-174	Heavy hydrocracked distillate	Do.
P 83-175	Hydrocracked residuum	Do.
P 83-176	Sweetened middle distillate	Do.
P 83-177	Normal paraffins	Do.
P 83-178	Sorption process raffinate	Do.
P 83-179	Solvent refined light naphtha	Do.
P 83-180	Solvent refined heavy naphtha	Do.
P 83-181	Solvent refined middle distillate	Do.
P 83-182	Solvent refined gas oil	Do.
P 83-183	Solvent refined light paraffinic distillate	Do.
P 83-184	Solvent refined heavy paraffinic distillate	Do.
P 83-185	Solvent deasphalted residual oil	Do.
P 83-186	Solvent decarbonized heavy paraffinic distillate	Do.
P 83-187	Solvent refined residual oil	Do.
P 83-188	Solvent refined spent lube oil	Do.
P 83-189	Light naphtha solvent extract	Do.
P 83-190	Heavy naphtha solvent extract	Do.
P 83-191	Middle distillate solvent extract	Do.
P 83-192	Gas oil solvent extract	Do.
P 83-193	Light paraffinic distillate solvent extract	Do.
P 83-194	Heavy paraffinic distillate solvent extract	Do.
P 83-195	Residual oil solvent extract	Do.
P 83-196	Heavy paraffinic distillate	Do.
P 83-197	Clay treated light paraffinic distillate	Do.
P 83-198	Clay treated heavy paraffinic distillate	Do.
P 83-199	Clay treated paraffin wax	Do.
P 83-200	Chemically neutralized spent lube oil	Do.
P 83-201	Hydrotreated light naphtha	Do.
P 83-202	Hydrotreated heavy naphtha	Do.
P 83-203	Hydrotreated light distillate	Do.
P 83-204	Hydrotreated middle distillate	Do.
P 83-205	Hydrotreated light paraffinic distillate	Do.
P 83-206	Hydrotreated heavy paraffinic distillate	Do.
P 83-207	Hydrotreated paraffin wax	Do.
P 83-208	Hydrotreated microcrystalline wax	Do.
P 83-209	Hydrotreated vacuum gas oil	Do.
P 83-210	Hydrotreated residual oil	Do.
P 83-211	Solvent dewaxed heavy light paraffinic distillate	Do.
P 83-212	Solvent dewaxed heavy paraffinic distillate	Do.
P 83-213	Solvent dewaxed residual oil	Do.
P 83-214	Slack wax	Do.
P 83-215	Petrolatum	Do.
P 83-216	Foots oil	Do.
P 83-218	Microcrystalline wax	Do.
P 83-219	Catalytic dewaxed naphtha	Do.
P 83-220	Catalytic dewaxed middle distillate	Do.
P 83-221	Catalytic dewaxed light paraffinic oil	Do.
P 83-222	Catalytic dewaxed heavy paraffinic oil	Do.

IV. 198 CHEMICAL SUBSTANCES FOR WHICH EPA HAS RECEIVED NOTICES OF COMMENCEMENT TO MANUFACTURE—Continued

PMN No.	Identity/generic name	Date of commencement
P 83-223	Hydrodesulfurized light naphtha	Do.
P 83-224	Hydrodesulfurized kerosine	Do.
P 83-225	Hydrodesulfurized gas oil	Do.
P 83-226	Hydrodesulfurized atmospheric tower residuum	Do.
P 83-227	Hydrodesulfurized light vacuum gas oil	Do.
P 83-228	Hydrodesulfurized heavy vacuum gas oil	Do.
P 83-229	Steam cracked residuum	Do.
P 83-230	Light aliphatic solvent naphtha	Do.
P 83-231	Medium aliphatic solvent naphtha	Do.
P 83-232	Heavy aliphatic solvent naphtha	Do.
P 83-233	Light aromatic solvent naphtha	Do.
P 83-234	Heavy aromatic solvent naphtha	Do.
P 83-235	Calcined coke	Do.
P 83-677	Generic name: Chromium complex of substituted alkylamino formimidphenol with sulfonaphtholazosulfophenylpyrazolone.	Dec. 17, 1986.
P 83-1023	Generic name: Alkyl aryl phosphine	Mar. 30, 1984.
P 84-42	Generic name: Substituted benzene	Dec. 1, 1987.
P 84-567	Generic name: 2-Propenenitrile, polymer with disubstituted 1,3-butadiene	Jan. 28, 1987.
P 84-913	Generic name: N,N'-bis(2-(2-(3-alkyl)thiazoline)vinyl)-1,4-phenylene diamine double salt	Aug. 16, 1985.
P 84-958	Generic name: Modified polymer of styrene with alkyl acrylate and alkyl methacrylates	Dec. 23, 1986.
P 84-959	Generic name: Substituted polyamine	Nov. 19, 1986.
P 84-1021	Generic name: Modified styrene-divinylbenzene polymer	Oct. 25, 1985.
P 84-1022	Generic name: Modified styrene-divinylbenzene polymer	Feb. 2, 1986.
P 85-53	Generic name: Crosslinked acrylic copolymer	Oct. 25, 1986.
P 85-1062	Generic name: Acrylic modified alkyd resin	Oct. 16, 1986.
P 85-1459	Generic name: Acrylic polymer containing aromatic carboxyesters	Dec. 22, 1986.
P 86-164	Generic name: Caprolactone modified by hydroxyethly methacrylate	June 17, 1986.
P 86-200	Generic name: Alkylamine polyglycol ether	Mar. 1, 1986.
P 86-329	Generic name: Polymer of heteromonocyclic diazine, carbomonocyclic alkyl halide and heteromonocyclic methyl chloride.	Nov. 26, 1986.
P 86-380	2-Naphthalenediazonium, 1-sulfo-6-(2-(sulfooxyethyl)sulfonyl)-, hydrogen sulfate	Dec. 17, 1986.
P 86-479	Generic name: Polymer of alkyl propenoates, substituted alkyl propenoates, ethenyl benzene and ethylenecarboxylic acid.	Jan. 13, 1987.
P 86-480	Generic name: Polymer of alkyl propenoates and ethenylbenzene	Jan. 14, 1987.
P 86-522	Generic name: Fatty alkyl dithiocarbamate	Jan 8, 1987.
P 86-659	Generic name: 2-4-2-Hydroxy-1-sulfate carbopolycyle carbamoyl -1-enylazo phenyl-substituted heterocycle-sulfonic acid, mixed salts.	Jan. 11, 1987.
P 86-845	Generic name: Substituted propionamide	Dec. 14, 1986.
P 86-846	Generic name: Substituted propionamide	Do.
P 86-859	Generic name: Aliphatic hydrocarbon resin	Jan. 24, 1987.
P 86-945	Generic name: Ester of long chain fatty acids	May 8, 1986.
P 86-946	Generic name: Perfluoroalkyl propoxy polyalkylethers	Dec. 17, 1986.
P 86-948	Generic name: Perfluoroalkyl propoxy polyalkylethers	Do.
P 86-965	Generic name: Ethylene interpolymer	Feb. 2, 1987.
P 86-1066	Generic name: Vinyl heterocycle alkyl methacrylate copolymer	Jan. 6, 1986.
P 86-1100	Generic name: Hydroxylated amine resin	Jan. 13, 1987.
P 86-1159	Generic name: Substituted imidazole	Jan. 6, 1987.
P 86-1182	Generic name: Substituted glycol, derivative	Do.
P 86-1190	Generic name: 3,5,5-trimethyl-3-cyclohexane-1-carboxaldehyde	Dec. 24, 1986.
P 86-1191	Generic name: 5-Acetyl-1,2,3,4,-tetrahydronaphthalene	Do.
P 86-1213	Generic name: Acrylate copolymer; sulfonated acrylate copolymer; sulfonated acrylate telomer	Nov. 10, 1986.
P 86-1220	Generic name: Triazine substituted naphthalene sulfonic acid	Jan. 6, 1987.
P 86-1226	Chlorinated aromatic azo anthraquinone pigment	Dec. 1, 1986.
P 86-1228	Generic name: Chlorinated aromatic azo anthraquinone pigment	Do.
P 86-1233	Generic name: Alkyl naphthalene sulfonic acid, reaction product with low molecular weight exoxide resin	Nov. 25, 1986.
P 86-1243	Tall oil fatty acid modified alkyl resin	Jan 12, 1987.
P 86-1300	Generic name: Cross linked acrylic resin	Dec. 8, 1986.
P 86-1312	Polymer of epsilon-caprolactone and polyethylene glycol; 1,3-benzenedicarboxylic acid, polymer with 1,6-hexanediol and nonanedioic acid; and 1,1' biphenyl, 4,4'-diisocyanato-3,3'dimethyl.	Jan. 1, 1987.
P 86-1364	Generic name: 1,1' biphenyl, substituted	Dec. 16, 1986.
P 86-1441	Generic name: Pyrrolopyrrol	Jan. 14, 1987
P 86-1443	Generic name: Siliconized epoxy resin	Dec. 10, 1986.
P 86-1448	Generic name: Thioxotropic alkyd resin	Dec. 16, 1986.
P 86-1449	Generic name: Alkyd resin	Do.
P 86-1454	Generic name: Thioxotropic alkyl resin	Dec. 15, 1986.
P 86-1455	Generic name: Alkyd resin	Do.
P 86-1511	Generic name: Oil modified polyurethane	Do.
P 86-1512	Generic name: Oil modified polyurethane	Do.
P 86-1543	Generic name: Polysilicate, dimethylvinyl-siloxy, trimethyl siloxy-	Jan. 9, 1987.
P 86-1544	Generic name: Disubstituted-disubstituted disubstituted-heterocycle, inorganic salt	Do.

IV. 198 CHEMICAL SUBSTANCES FOR WHICH EPA HAS RECEIVED NOTICES OF COMMENCEMENT TO MANUFACTURE—Continued

PMN No.	Identity/generic name	Date of commencement
P 86-1547	Generic name: Thermoplastic polyurethane polymer	Nov. 18, 1986.
P 86-1570	Toluene	Jan. 9, 1987.
P 86-1575	Generic name: Thioxotropic alkyd resin	Dec. 11, 1986.
P 86-1576	Generic name: Alkyd resins	Dec. 16, 1986.
P 86-1580	Generic name: Alkyd resin	Dec. 15, 1986.
P 86-1581	Generic name: Alkyd resin	Do.
P 86-1582	Generic name: Alkyd resin	Dec. 11, 1986.
P 86-1587	Generic name: Dodecamine, n-dodecyl dodecamine,n,n-dimethyl	Dec. 29, 1986.
P 86-1597	Generic name: Alkyl cycloalkyl trimellitate	Dec. 2, 1986.
P 86-1612	Generic name: 9,10 anthracenedione, substituted	Dec. 16, 1986.
P 86-1677	Generic name: Hydroxyl containing acrylic copolymer	Do.
P 86-1722	Generic name: Phenolic polyurethane resin	Jan. 5, 1987.
P 86-1733	Generic name: Alkyl benezene sulfonic acid compound with amine	Dec. 29, 1986.
P 87-27	Generic name: Alkenyl succinate, metal salt	Jan. 28, 1987.
P 87-45	Generic name: Polypropoxylated silicone	Jan. 12, 1987.
P 87-48	Generic name: Aluminum diisopropoxy alkoxide	Jan. 30, 1987.
P 87-80	Generic name: Cumene derivative	Feb. 25, 1987.
P 87-124	Series isomers of undetermined structure	Jan. 25, 1987.
P 87-125	Series isomers of undetermined structure	Jan. 26, 1987.
P 87-179	Generic name: Addition product of a primary amine and aliphatic isocyanate	Feb. 3, 1987.
Y 86-163	Generic name: Copolymer of polyamide with modified acrylic elastomer	Dec. 29, 1986.
Y 86-205	Generic name: Water reducible alkyd resin	Aug. 14, 1986.
Y 86-206	Generic name: Sulfonated polyacrylate, sodium salt	Sept. 16, 1986.
Y 86-208	Generic name: Acrylic polymer	Sept. 4, 1986.
Y 86-209	Generic name: Fatty oil polyester	Aug. 21, 1986.
Y 86-210	Generic name: Unsaturated polyester polymer	Aug. 20, 1986.
Y 86-211	4,4 isopropylidene epichlorohydrin dicyclohexanol phenol a linseed fatty acids conjugated tall oil fatty acids glacial acrylic acid methyl methacrylate styrene.	Oct. 24, 1986.
Y 86-218	Generic name: Ketone resin	Jan. 14, 1987.
Y 86-244	Generic name: Polyurethane	Nov. 5, 1986.
Y 87-1	Generic name: Polyurethane	Do.
Y 87-3	Generic name: Polyurethane	Do.
Y 87-4	Generic name: Solvent-thinned long oil alkyd resin	Oct. 31, 1986.
Y 87-7	Generic name: Acrylic polymer	Nov. 10, 1986.
Y 87-19	Generic name: Acrylic polymer	Dec. 19, 1986.
Y 87-31	Generic name: Unsaturated polyester	Jan. 20, 1987.
Y 87-33	Generic name: Copolymer of butadiene and methacrylic monomers	Jan. 9, 1987.
Y 87-35	Generic name: Polyester resin	Dec. 9, 1986.
Y 87-38	Generic name: Silicone modified alkyd resin	Jan. 28, 1987.
Y 87-50	Generic name: Adipic acid polyester	Dec. 14, 1986.

V. 31 PREMANUFACTURE NOTICES FOR WHICH THE PERIOD HAS BEEN SUSPENDED

PMN No.	
P 85-609	P 86-1634
P 85-620	P 87-90
P 85-676	P 87-178
P 85-710	P 87-180
P 85-719	P 87-235
P 85-725	P 87-252
P 85-949	P 87-255
P 85-976	P 87-262
P 86-635	P 87-304
P 86-660	P 87-534
P 86-662	P 87-546
P 86-814	P 87-551
P 86-1011	P 87-677
P 86-1162	P 87-678
P 86-1165	P 87-679
P 86-1530	

[FR Doc. 87-13341 Filed 6-24-87; 8:45 am]

BILLING CODE 6560-50-M

Reader Aids

Federal Register

Vol. 52, No. 122

Thursday, June 25, 1987

INFORMATION AND ASSISTANCE

SUBSCRIPTIONS AND ORDERS

Subscriptions (public)	202-783-3238
Problems with subscriptions	275-3054
Subscriptions (Federal agencies)	523-5240
Single copies, back copies of FR	783-3238
Magnetic tapes of FR, CFR volumes	275-1184
Public laws (Slip laws)	275-3030

PUBLICATIONS AND SERVICES

Daily Federal Register

General information, index, and finding aids	523-5227
Public inspection desk	523-5215
Corrections	523-5237
Document drafting information	523-5237
Legal staff	523-4534
Machine readable documents, specifications	523-3408

Code of Federal Regulations

General information, index, and finding aids	523-5227
Printing schedules and pricing information	523-3419

Laws	523-5230

Presidential Documents

Executive orders and proclamations	523-5230
Public Papers of the President	523-5230
Weekly Compilation of Presidential Documents	523-5230

United States Government Manual	523-5230

Other Services

Library	523-5240
Privacy Act Compilation	523-4534
TDD for the deaf	523-5229

FEDERAL REGISTER PAGES AND DATES, JUNE

20371-20590 1
20591-20694 2
20695-21000 3
21001-21238 4
21239-21492 5
21493-21650 8
21651-21930 9
21931-22286 10
22287-22430 11
22431-22628 12
22629-22752 15
22753-23006 16
23007-23164 17
23165-23264 18
23265-23420 19
23421-23536 22
23537-23628 23
23629-23778 24
23779-23930 25

CFR PARTS AFFECTED DURING JUNE

At the end of each month, the Office of the Federal Register publishes separately a List of CFR Sections Affected (LSA), which lists parts and sections affected by documents published since the revision date of each title.

1 CFR

304 ..... 22753, 23627
305 23629
310 23629

3 CFR

Proclamations:
5631 (*See* U.S. Trade Representative Notice) 22693
5663 20695
5664 21239
5665 23007
5666 23009
5667 23011
5668 23165
5669 23537
5670 23539
5671 23541

Executive Orders:
12576 (Superseded by EO 12598) 23421
12598 23421
12599 23779
12600 23781

Administrative Orders:
Presidential Determinations:
No. 87-14 of June 2, 1987 22431
No. 87-15 of June 23, 1987 23785

5 CFR

831 22433
842 22435
843 23013
845 23014
1600 20591
1640 20371

Proposed Rules:
213 23040
890 22475

7 CFR

1d 20372
2 ..... 21493, 21494, 21931
4 21651
51 22436
246 21232
272 ..... 20376, 22888
273 ..... 20376, 22888
330 22892
340 22892
418 23423
419 23423
422 23424
427 23423
429 23423
724 22287
725 22287
726 22287
900 20591
910 ..... 20380, 21241, 22437, 23265
912 21241
918 ..... 21494, 23014
923 20381
925 20382
948 23014
953 23014
1106 20383
1736 22288
1922 23543
1930 20697
1944 23543
1945 20384
1951 23543
1980 22290

Proposed Rules:
46 23842
220 23041
226 22030
250 22660
251 21545
401 22476
656 20606
907 21546
908 21546
925 ..... 20402, 21960
928 ..... 21065, 22888
959 21068
1011 23453
1033 23306
1046 23306
1065 21560
1068 23843
1944 21069
3016 ..... 21820, 23627

8 CFR

100 22629
103 22629
214 20554

Proposed Rules:
207 23307
214 22661

9 CFR

51 22290
78 ..... 22290, 22292, 23015
92 21496
381 23016

Proposed Rules:
91 21688
309 21561
310 21561
314 21561
327 23041
362 21563
381 23041

10 CFR

Ch. I 20592

70 ... 21651, 22416, 23257
72 ... 21651, 23257
73 ... 21651, 23257
74 ... 21651, 23257
Proposed Rules:
600 ... 21820, 23627
625 ... 22960
1004 ... 23156
1013 ... 20403

11 CFR
4 ... 23636
5 ... 23636
106 ... 20864
9001 ... 20864
9002 ... 20864
9003 ... 20864
9004 ... 20864
9005 ... 20864
9006 ... 20864
9007 ... 20864
9012 ... 20864
9031 ... 20864
9032 ... 20864
9033 ... 20864
9034 ... 20864
9035 ... 20864
9036 ... 20864
9037 ... 20864
9038 ... 20864
9039 ... 20864

12 CFR
225 ... 23021
309 ... 23425
337 ... 23543
563 ... 23640, 23787
Proposed Rules:
3 ... 23045
18 ... 23456
211 ... 21564
225 ... 21564
262 ... 21564
350 ... 23554
404 ... 21569
563 ... 23845
571 ... 23181
588 ... 23181
614 ... 21073

13 CFR
121 ... 21497
309 ... 21932
Proposed Rules:
143 ... 21820, 23627

14 CFR
21 ... 23024
25 ... 23024
39 ... 20698-20701, 21242-21244, 21497, 21659, 22630, 23427, 23428, 23641-23645
71 ... 20702, 20703, 21246-21248, 21498-1499, 22630, 23138, 23429, 23430
73 ... 21246-21250, 21499
75 ... 21247-21251
91 ... 22734
97 ... 21500, 23430
121 ... 20950, 21472
135 ... 22734
159 ... 21502, 21908, 23762
171 ... 20703
300 ... 21150
1207 ... 22755
Proposed Rules:
Ch. I ... 22329
27 ... 20938
29 ... 20938
36 ... 23144
39 ... 20721, 20722, 21312, 21314, 21572-21575, 22329, 22331, 22786, 23461-23466, 23661-23663
61 ... 22918
71 ... 20412, 20825, 21316, 22031, 22332, 22918, 23468-23470
91 ... 22918, 23144
121 ... 20560, 20982
135 ... 20560
234 ... 22046
255 ... 22046

15 CFR
371 ... 23026, 23027, 23167
373 ... 22631, 23167
374 ... 23027, 23167
379 ... 21504
385 ... 23167, 23544
399 ... 22631, 23167, 23169, 23544
Proposed Rules:
24 ... 21820, 23627

16 CFR
3 ... 22292
4 ... 22292
305 ... 22633
Proposed Rules:
13 ... 20723, 22789

17 CFR
Ch. IV ... 23138
5 ... 22634
31 ... 22634
140 ... 20592, 22415
210 ... 23170
211 ... 21933
229 ... 21252, 21934
230 ... 21252
239 ... 21252, 21934
240 ... 21252, 21934, 22295, 23646
Proposed Rules:
33 ... 22333
240 ... 22334, 22493, 23665, 23849, 23855
250 ... 23679
270 ... 22334, 22496

18 CFR
2 ... 21410
154 ... 21263, 21660, 23030, 23650
270 ... 21669
271 ... 21660, 23030
284 ... 21669
300 ... 20704
375 ... 21263, 23650
382 ... 21263, 23650
Proposed Rules:
2 ... 23183
4 ... 21576, 23557
12 ... 23557
154 ... 20828
161 ... 21578
250 ... 21578
282 ... 20828
375 ... 20828
380 ... 23183
381 ... 20828

19 CFR
4 ... 20593
24 ... 20593
101 ... 22299
146 ... 20593
178 ... 20593
Proposed Rules:
201 ... 21317

20 CFR
404 ... 21410
416 ... 21939
654 ... 20496
655 ... 20496
656 ... 20593
Proposed Rules:
61 ... 20536
62 ... 20536
626 ... 23681
627 ... 23681
628 ... 23681
629 ... 23681
630 ... 23681
631 ... 23681

21 CFR
74 ... 21302, 21505
81 ... 21302, 21505
82 ... 21505
177 ... 23804
178 ... 22300
193 ... 23137, 23916
201 ... 21505
312 ... 23031, 23628
442 ... 20709
510 ... 20385, 20597, 23397
520 ... 20597, 29598
522 ... 23031
544 ... 22438
561 ... 23137, 23916
573 ... 21001
866 ... 22577
868 ... 22577
870 ... 23137
876 ... 22577
890 ... 22577
1301 ... 20598
Proposed Rules:
310 ... 23184
1240 ... 22340

22 CFR
224 ... 20385
Proposed Rules:
41 ... 20725, 22628
135 ... 21820, 23627
224 ... 20413
526 ... 22791

23 CFR
668 ... 21945
Proposed Rules:
650 ... 20726

24 CFR
Proposed Rules:
85 ... 21820, 23627
111 ... 21820, 23627
200 ... 21596, 21961
203 ... 21961
221 ... 21961
222 ... 21961
226 ... 21961
234 ... 21961
235 ... 21961
247 ... 23761
511 ... 21820, 23627
570 ... 21820, 23627
571 ... 21820, 23627
575 ... 21820, 23627
850 ... 21820, 23627
886 ... 23761
905 ... 21820, 23627
941 ... 21820, 23627
968 ... 21820, 23627
990 ... 21820, 23627

25 CFR
244 ... 23805
700 ... 21950
Proposed Rules:
76 ... 20727
151 ... 23560

26 CFR
1 ... 22301, 22764, 23398, 23432
31 ... 21509
602 ... 21509, 22764, 23432
Proposed Rules:
1 ... 22345, 22716, 22795, 23308, 23471
602 ... 23308, 23471

27 CFR
9 ... 21513, 22302, 23650, 23651
Proposed Rules
4 ... 23685
5 ... 23685

28 CFR
2 ... 22777
541 ... 20678
602 ... 22438, 22439
Proposed Rules:
2 ... 22499
16 ... 22795
32 ... 23561
66 ... 21820, 23627

29 CFR
90 ... 23400
860 ... 23812
1625 ... 23811
1952 ... 21952
2619 ... 22635
2676 ... 22636
Proposed Rules:
7 ... 22662
22 ... 20606
97 ... 21820, 23627
501 ... 20524
511 ... 20386
1470 ... 21820, 23627
1926 ... 20616, 22799
2201 ... 23185
2640 ... 21319
2646 ... 21319

30 CFR
218 ... 23812
250 ... 22305, 23815
251 ... 23440
700 ... 21228
870 ... 21228
935 ... 23265
938 ... 23172
Proposed Rules:
700 ... 20546

701 ... 21598
702 ... 20546
750 ... 20546, 21328
764 ... 21904
769 ... 21904
842 ... 21598
843 ... 21598
870 ... 20546
910 ... 20546
912 ... 20546
914 ... 22346
921 ... 20546
922 ... 20546
925 ... 22499, 22500
933 ... 20546
937 ... 20546
939 ... 20546
941 ... 20546
942 ... 20546
947 ... 20546

31 CFR

Proposed Rules:
16 ... 21689
103 ... 21699

32 CFR

40 ... 23267
40a ... 23298
166 ... 23298
706 ... 21001, 21002, 21679-21681, 23173, 23545, 23546

Proposed Rules:
68 ... 22662
199 ... 20731
278 ... 21820, 23627

33 CFR

4 ... 23653
100 ... 20386, 21002, 21515, 22307, 22308, 22439, 23174
117 ... 21953, 23441
135 ... 23175
165 ... 23442
207 ... 22309
222 ... 23816

Proposed Rules:
100 ... 21603, 21604, 22347
117 ... 21605, 23187, 23472
240 ... 23687

34 CFR

649 ... 22284
760 ... 22441

Proposed Rules:
74 ... 21820, 23627
80 ... 21820, 23627
99 ... 22250
222 ... 22501, 23137
607 ... 22264
608 ... 22274
609 ... 22274
629 ... 23774
631 ... 22948
632 ... 22948
633 ... 22948
634 ... 22948
635 ... 22948
692 ... 23260
763 ... 21920
785 ... 22062
786 ... 22062
787 ... 22062
788 ... 22062
789 ... 22062

36 CFR

7 ... 20387, 23304
59 ... 22747
211 ... 23175
1253 ... 23820
1254 ... 22415
1280 ... 23820

Proposed Rules:
7 ... 22031, 22662
211 ... 22348
223 ... 22348, 23188
254 ... 23473
1207 ... 21820, 23627

37 CFR

202 ... 23443
307 ... 22637, 23546

Proposed Rules:
202 ... 23476, 23691

38 CFR

1 ... 23823
17 ... 23824

Proposed Rules:
1 ... 21700
3 ... 23188
8 ... 22350
17 ... 22351
21 ... 21709
36 ... 20617
43 ... 21820, 23627

39 CFR

111 ... 20388
265 ... 22778
963 ... 20599

Proposed Rules:
111 ... 23308, 23477, 23561

40 CFR

52 ... 22638, 22778, 23032, 23446, 23829
60 ... 20391, 21003, 22779, 22888, 23178
61 ... 20397, 23178
81 ... 22442
141 ... 20672
142 ... 20672
144 ... 20672
180 ... 21953, 23039, 23653, 23654
260 ... 21010
261 ... 21010, 21306
262 ... 21010
264 ... 21010
265 ... 21010
266 ... 21306
268 ... 21010
270 ... 21010, 23447
271 ... 21010
272 ... 22443
704 ... 21018
707 ... 21412
716 ... 22444
761 ... 23397
766 ... 21412
795 ... 21018
799 ... 20710, 21018, 21516, 23547, 23761

Proposed Rules:
Ch. I ... 22244, 23477
30 ... 21820, 23627
33 ... 21820, 23627
52 ... 20422, 21974, 22501, 22503, 23485, 23692
61 ... 23486
81 ... 21074
86 ... 21075
123 ... 23487
180 ... 20751, 20753, 21794, 21974, 23694, 23916
228 ... 20429, 21082, 22352
260 ... 20914
264 ... 20754, 23695
265 ... 20754, 20914, 23695
268 ... 22356
270 ... 20754, 20914
372 ... 21152
700 ... 20494
712 ... 23627, 23628
750 ... 23054
799 ... 23862

41 CFR

101-26 ... 23656
101-40 ... 21031, 23137
101-41 ... 21682, 21683
101-45 ... 23830
105-53 ... 23656

Proposed Rules
105-60 ... 23697

42 CFR

2 ... 21796
34 ... 21532
57 ... 20986
58 ... 23179
110 ... 22311
405 ... 22444, 22638, 23628
409 ... 22638, 23628
412 ... 23832
413 ... 21225, 23397
416 ... 22444
417 ... 22311
420 ... 22444
431 ... 22444
434 ... 22311
442 ... 22638, 23628
485 ... 22444
489 ... 22444
498 ... 22444
1001 ... 22444
1004 ... 22444

Proposed Rules:
34 ... 21607
57 ... 20989, 21486, 21490, 22415
405 ... 22080, 23055, 23514
412 ... 22080, 22359, 23514
413 ... 20623, 21330, 22080, 23514
466 ... 22080, 23514

43 CFR

4 ... 21307
11 ... 22454
3100 ... 22646

Public Land Orders:
6566 (Corrected by PLO 6648) ... 21035
6648 ... 21035
6649 ... 23549
6650 ... 23549

Proposed Rules:
2 ... 20494
4 ... 20755
12 ... 21820, 23627
1820 ... 22592
3000 ... 22592
3040 ... 22592
3100 ... 22592
3110 ... 22592
3120 ... 22592
3130 ... 22592
3150 ... 22592
3160 ... 22592
3180 ... 22592
3200 ... 22592
3210 ... 22592
3220 ... 22592
3240 ... 22592
3250 ... 22592
3260 ... 22592

44 CFR

64 ... 21794, 22780
65 ... 22323, 22324
67 ... 22325
81 ... 21035

Proposed Rules:
13 ... 21820, 23627
65 ... 22360
67 ... 22800, 23310

45 CFR

1204 ... 20714
2001 ... 22646, 22648

Proposed Rules:
13 ... 23311
92 ... 21820, 23627
1157 ... 21820, 23627
1174 ... 21820, 23627
1179 ... 20628
1183 ... 21820, 23627
1234 ... 21820, 23627
2015 ... 21820, 23627

46 CFR

32 ... 22751, 23515
77 ... 22751
92 ... 22751
96 ... 22751
150 ... 21036
190 ... 22751
195 ... 22751
276 ... 23522
310 ... 21533
386 ... 21534

Proposed Rules:
558 ... 20430
559 ... 20430
560 ... 20430
561 ... 20430
562 ... 20430
564 ... 20430
566 ... 20430
569 ... 20430
586 ... 20430

47 CFR

0 ... 21684
1 ... 21051, 22654
2 ... 21686
15 ... 21686, 22459
21 ... 23549
22 ... 22461
31 ... 20599
32 ... 20599
64 ... 20714, 21954, 23658
67 ... 21537
69 ... 21537
73 ... 21056, 21308, 21684, 21955-21958, 22472, 22473, 22781-22785, 23305, 23551 23659
76 ... 22459
94 ... 23549

Proposed Rules:
1 ... 21333

2 21333
21 21333
22 20630
73 ..... 20430-20432, 21086, 21976, 22504-22507, 22816-22818, 23314, 23563-23569 23704, 23873, 23875
74 ..... 21333, 21710
80 ..... 21334, 22508
87 21334
90 21335
94 21333

48 CFR

5 21884
6 21884
13 21884
15 21884
19 21884
52 21884
217 23835
248 23835
252 ..... 22415, 23835
505 22654
509 22655
542 21056
552 21056
553 21056
701 21057
705 21057
709 21057
715 21057
719 21057
731 21057
736 21057
752 21057

Proposed Rules:

225 22663
242 21711

49 CFR

310 22473
383 20574
391 20574
571 20601
1039 23660
1090 23660
1206 20399
1249 20399

Proposed Rules:

Ch. X 23704
18 ..... 21820, 23627
171 20631
172 20631
173 20631
174 20631
175 20631
176 20631
177 20631
178 20631
179 20631
192 21087
571 ..... 22818, 23314
1150 20632
1201 23316
1241 23316

50 CFR

17 ..... 20715, 20994, 21059, 21478, 21481, 22418, 22580, 22585, 22930-22939, 23148
285 20719
604 ..... 21544, 23836
640 ..... 22656, 23450
642 23836
651 22327
658 21544
672 ..... 20720, 22327, 23552
674 23450
675 21958

Proposed Rules:

17 ..... 21088, 22944, 23152, 23317
20 20757
23 20433
25 21976
642 21977
650 21712
651 23570
653 22822
672 22829
675 22829

LIST OF PUBLIC LAWS

Note: No public bills which have become law were received by the Office of the Federal Register for inclusion in today's **List of Public Laws.**

Last List June 24, 1987.