4-6-88
Vol. 53 No. 66
Pages 11239-11486

federal register

Wednesday
April 6, 1988

Briefings on How To Use the Federal Register—
For information on briefings in Washington, DC, and Boston, MA, see announcement on the inside cover of this issue.

FEDERAL REGISTER Published daily, Monday through Friday, (not published on Saturdays, Sundays, or on official holidays), by the Office of the Federal Register, National Archives and Records Administration, Washington, DC 20408, under the Federal Register Act (49 Stat. 500, as amended; 44 U.S.C. Ch. 15) and the regulations of the Administrative Committee of the Federal Register (1 CFR Ch. I). Distribution is made only by the Superintendent of Documents, U.S. Government Printing Office, Washington, DC 20402.

The **Federal Register** provides a uniform system for making available to the public regulations and legal notices issued by Federal agencies. These include Presidential proclamations and Executive orders and Federal agency documents having general applicability and legal effect, documents required to be published by act of Congress and other Federal agency documents of public interest. Documents are on file for public inspection in the Office of the Federal Register the day before they are published, unless earlier filing is requested by the issuing agency.

The **Federal Register** will be furnished by mail to subscribers for $340.00 per year, or $170.00 for 6 months in paper form, or $188.00 per year, or $94.00 for six months in microfiche form, payable in advance. The charge for individual copies is $1.50 for each issue, or $1.50 for each group of pages as actually bound. Remit check or money order, made payable to the Superintendent of Documents, U.S. Government Printing Office, Washington, DC 20402, or charge to your GPO Deposit Account or VISA or Mastercard.

There are no restrictions on the republication of material appearing in the **Federal Register**.

How To Cite This Publication: Use the volume number and the page number. Example: 52 FR 12345.

SUBSCRIPTIONS AND COPIES

PUBLIC

Subscriptions:

Paper or fiche	202-783-3238
Magnetic tapes	275-3328
Problems with public subscriptions	275-3054

Single copies/back copies:

Paper or fiche	783-3238
Magnetic tapes	275-3328
Problems with public single copies	275-3050

FEDERAL AGENCIES

Subscriptions:

Paper or fiche	523-5240
Magnetic tapes	275-3328
Problems with Federal agency subscriptions	523-5240

For other telephone numbers, see the Reader Aids section at the end of this issue.

THE FEDERAL REGISTER
WHAT IT IS AND HOW TO USE IT

FOR: Any person who uses the Federal Register and Code of Federal Regulations.

WHO: The Office of the Federal Register.

WHAT: Free public briefings (approximately 3 hours) to present:
1. The regulatory process, with a focus on the Federal Register system and the public's role in the development of regulations.
2. The relationship between the Federal Register and Code of Federal Regulations.
3. The important elements of typical Federal Register documents.
4. An introduction to the finding aids of the FR/CFR system.

WHY: To provide the public with access to information necessary to research Federal agency regulations which directly affect them. There will be no discussion of specific agency regulations.

WASHINGTON, DC

WHEN: April 15; at 9:00 a.m.
WHERE: Office of the Federal Register, First Floor Conference Room, 1100 L Street NW., Washington, DC
RESERVATIONS: Carolyn Payne, 202-523-3187

BOSTON, MA

WHEN: April 19; at 9 a.m.
WHERE: Thomas P. O'Neill, Jr. Federal Building, Auditorium, 10 Causeway Street, Boston, MA.
RESERVATIONS: Call the Boston Federal Information Center, 617-565-8123

Contents

Federal Register
Vol. 53, No. 66
Wednesday, April 6, 1988

Agricultural Stabilization and Conservation Service
PROPOSED RULES
Payment limitation, and determination of eligibility of foreign individuals or entities to receive program benefits [**Editorial Note:** For a document on this subject, see entry under Commodity Credit Corporation.]

Agriculture Department
See also Agricultural Stabilization and Conservation Service; Commodity Credit Corporation; Federal Crop Insurance Corporation; Foreign Agricultural Service
NOTICES
Import quotas and fees:
Meat import limitations; quarterly estimates, 11323

Antitrust Division
NOTICES
National cooperative research notifications:
Bell Communications Research, Inc., et al., 11352

Arts and Humanities, National Foundation
See National Foundation on the Arts and the Humanities

Coast Guard
RULES
Anchorage regulations:
New Jersey; correction, 11395
PROPOSED RULES
Dry cargo ship subdivision and damage stability, 11440

Commerce Department
See International Trade Administration; National Oceanic and Atmospheric Administration

Committee for the Implementation of Textile Agreements
NOTICES
Cotton, wool, and man-made textiles:
Indonesia, 11327

Commodity Credit Corporation
RULES
Loan and purchase programs:
Grains and similarly handled commodities, 11239
PROPOSED RULES
Payment limitation, and determination of eligibility of foreign individuals or entities to receive program benefits, 11474
NOTICES
Contract fees, annual:
Grain and rice storage agreement, uniform, 11323

Commodity Futures Trading Commission
NOTICES
Committees; establishment, renewal, termination, etc.:
CFTC-State Cooperation Advisory Committee, 11328

Defense Department
See Navy Department; Uniformed Services University of the Health Sciences

Drug Enforcement Administration
NOTICES
Applications, hearings, determinations, etc.:
Agustin, Norberto T., M.D., 11352
Hoffman-La Roche Inc., 11353
Holme Drug Store, 11353
Knoll Pharmaceuticals, 11353
Lopez, Leonardo V., M.D., 11353
McNeilab, Inc., 11353
Nagalla, Ratnam B., M.D., 11354
Pate, James E., D.D.S., 11354
Roberts Cape Coral Pharmacy, 11354

Economic Regulatory Administration
NOTICES
Natural gas exportation and importation:
TXG Gas Marketing Co., 11331
Woodward Marketing, Inc., 11331

Education Department
NOTICES
Agency information collection activities under OMB review, 11329
Grants; availability, etc.:
Indian Education program—
Formula grants, 11330
National Institute on Disability and Rehabilitation Research—
Research and demonstration projects, etc., 11330

Energy Department
See also Economic Regulatory Administration; Federal Energy Regulatory Commission
RULES
Conflict of interests:
Financial reporting requirement exemptions, 11240
PROPOSED RULES
Acquisition regulations:
Contractor travel costs; cost principles, 11318
NOTICES
Nuclear waste management:
Spent nuclear fuel storage and disposal; nonnuclear weapon states; technical assistance update, 11398

Environmental Protection Agency
RULES
Air quality implementation plans; approval and promulgation; various States:
North Carolina, 11273
Pesticides; tolerances in food, animal feeds, and raw agricultural commodities:
3-(3,5-dichlorophenyl)-5-ethenyl-5-methyl-2, 4-oxazolidinedione, 11274
PROPOSED RULES
Air quality implementation plans; approval and promulgation; various States:
California, 11314
Pesticides; tolerances in food, animal feeds, and raw agricultural commodities:
Triflumizole, 11313

NOTICES
Environmental statements; availability, etc.:
New Bedford, MA; municipal wastewater treatment facilities, 11336
Pesticides; emergency exemptions, etc.:
Avermectin B1, 11337
Clofentezine, 11337
Clofentezine and hexythiazox, 11338
Pesticides; experimental use permits, etc.:
Ciba-Geigy Corp. et al., 11339
Pesticides; receipts of State registrations, 11339
Pesticides; temporary tolerances:
Avermectin, 11341
Toxic and hazardous substance control:
Testing consent agreement development—
Octamethylcyclotetrasiloxane (OMCTS), 11341

Export Administration
See International Trade Administration

Federal Aviation Administration
RULES
Airworthiness directives:
Hercules, 11246

Federal Communications Commission
NOTICES
Agency information collection activities under OMB review, 11342
Rulemaking proceedings; petitions filed, granted, denied, etc., 11343

Federal Crop Insurance Corporation
PROPOSED RULES
Crop insurance; various commodities:
Fresh market sweet corn, 11299

Federal Emergency Management Agency
RULES
Federal crime insurance program:
Residential and commercial rates, commercial burgulary and robbery policy premium discounts, and protective device requirements, 11275

Federal Energy Regulatory Commission
NOTICES
Electric rate, small power production, and interlocking directorate filings, etc.:
Niagara Mohawk Power Corp. et al., 11332
Natural gas certificate filings:
Southern Natural Gas Co. et al., 11332
Applications, hearings, determinations, etc.:
ANR Pipeline Co., 11334
National Fuel Gas Supply Corp., 11334
Pacific Offshore Pipeline Co., 11334
Ringwood Gathering Co., 11334
Williams Natural Gas Co., 11335
Wyoming-California Pipeline Co. et al., 11335

Federal Highway Administration
RULES
Highway safety programs; effectiveness determination, 11255
NOTICES
Environmental statements; availability, etc.:
Worcester/Milbury, MA, 11392

Federal Home Loan Bank Board
RULES
Federal Savings and Loan Insurance Corporation:
Money laundering crimes; reporting requirements, etc., 11242
Regulatory capital—
Insured institutions requirements, 11243
NOTICES
Applications, hearings, determinations, etc.:
Bankers Federal Savings, F.S.B., 11343
Safey Federal Savings & Loan Association of Kansas City et al., 11343

Federal Reserve System
NOTICES
Applications, hearings, determinations, etc.:
Compagnie Financiere de Suez et al., 11343
Lifton, Bruce G., et al., 11344
NewMil Bancorp, Inc., et al., 11344
Norwest Corp., 11345

Federal Trade Commission
RULES
Prohibited trade practices:
Great Earth International, Inc., 11247
Supermarket Development Corp. et al., 11247

Fish and Wildlife Service
NOTICES
Agency information collection activities under OMB review, 11350

Food and Drug Administration
RULES
Animal drugs, feeds, and related products:
Oxytetracycline; correction, 11251
GRAS or prior-sanctioned ingredients:
Nisin, 11247
Medical devices and radiological health regulations; editorial amendments, 11251
PROPOSED RULES
Food additives:
Polymers—
Colorants, 11402
Food for human consumption:
Pasteurized process cheese spread; identity standards, 11312
NOTICES
Medical devices; premarket approval:
Weck Model BL-12 Nd:YAG Ophthalmic Laser; correction, 11395

Foreign Agricultural Service
NOTICES
Agricultural Advisory Committees for Trade; FY 1987 topics, 11324

Health and Human Services Department
See also Food and Drug Administration; Health Resources and Services Administration; Public Health Service
RULES
Employee indemnification, 11279

Health Resources and Services Administration
See also Public Health Service
NOTICES
Grants and cooperative agreements:
Community and migrant health centers activities, 11345
Geriatric education centers, 11347

Housing and Urban Development Department
RULES
Minimum property standards:
Lead standards in water piping, 11270

Immigration and Naturalization Service
PROPOSED RULES
Aliens:
Asylum and withholding of deportation procedures, 11300

Indian Affairs Bureau
RULES
Tribal government:
Cow Creek Band of Umpqua Indians; enrollment, 11271
NOTICES
Meetings:
Child Protection National Oversight Committee, 11349

Interior Department
See Fish and Wildlife Service; Indian Affairs Bureau; Land Management Bureau

International Trade Administration
NOTICES
Export trade certificates of review, 11325
Applications, hearings, determinations, etc.:
University of California, et al., 11326
University of Pittsburgh, 11326

International Trade Commission
NOTICES
Agency information collection activities under OMB review, 11350
Import investigations:
All terrain vehicles from Japan, 11351
High geometric surface area catalysts and components, 11351
Programmable digital clock thermostats, 11351

Interstate Commerce Commission
NOTICES
Railroad operation, acquisition, construction, etc.:
Tennessee Southern Railroad Co., Inc., 11352

Justice Department
See Antitrust Division; Drug Enforcement Administration; Immigration and Naturalization Service

Labor Department
See Mine Safety and Health Administration; Occupational Safety and Health Administration; Pension and Welfare Benefits Administration

Land Management Bureau
PROPOSED RULES
Minerals management:
Onshore oil and gas operations; Federal and Indian oil and gas leases, Order Nos. 4 and 5, 11318
NOTICES
Meetings:
Yuma District Advisory Council, 11350
Realty actions; sales, leases, etc.:
New Mexico; correction, 11349
Resource management plans, etc.:
San Juan Resource Area, UT, 11349

Legal Services Corporation
NOTICES
Meetings; Sunshine Act, 11394

Mine Safety and Health Administration
RULES
Coal mine safety and health:
Underground coal mining—
Roof, face, and rib support; correction, 11395

National Foundation on the Arts and the Humanities
NOTICES
Meetings:
Music Advisory Panel, 11360

National Highway Traffic Safety Administration
RULES
Highway safety programs; effectiveness determination, 11255
Motor vehicle safety standards:
Motorcycle helmets, 11280

National Oceanic and Atmospheric Administration
RULES
Fishery conservation and management:
Gulf of Alaska groundfish, 11297
PROPOSED RULES
Fishery conservation and management:
Atlantic billfish, 11321
NOTICES
Meetings:
Gulf of Mexico and South Atlantic Fishery Management Councils, 11326
Gulf of Mexico Fishery Management Council, 11326
Pacific Fishery Mangement Council, 11327

National Transportation Safety Board
NOTICES
Meetings; Sunshine Act, 11394

Navy Department
NOTICES
Meetings:
Naval Academy; Academic Advisory Board to Superintendent, 11329
Naval Postgraduate School, Board of Advisors to Superintendent, 11329
Naval Research Advisory Committee, 11329

Nuclear Regulatory Commission
PROPOSED RULES
Practice rules:
Domestic licensing proceedings—
Gelogic repository for high-level radioactive waste; negotiated rulemaking advisory committee, 11310
Production and utilization facilities; domestic licensing:
Leak-before-break technology, 11311
NOTICES
Environmental statements; availability, etc.:
Dairyland Power Cooperative, 11361
Nuclear Waste Policy Act:
Spent nuclear fuel storage and disposal; nonnuclear weapon states; technical assistance update, 11398
Operating licenses, amendments; no significant hazards considerations
Biweekly notices, 11361
Applications, hearings, determinations, etc.:
Finlay Testing Laboratories, Inc., 11385
Union Electric Co., 11386

Occupational Safety and Health Administration
RULES
Safety and health standards:
Ethylene oxide; occupational exposure, 11414

Pension and Welfare Benefits Administration
NOTICES
Employee benefit plans; prohibited transaction exemptions:
Modern Display Service, Inc., et al., 11354
Tupelo Anesthesia Group, P.A., et al., 11359

Public Health Service
See also Food and Drug Administration; Health Resources and Services Administration
NOTICES
Organization, functions, and authority delegations:
Resource Management Office, etc., 11348

Research and Special Programs Administration
PROPOSED RULES
Hazardous materials:
Uranium hexafluoride, 11320

Securities and Exchange Commission
NOTICES
Agency information collection activities under OMB review, 11386
Self-regulatory organizations; proposed rule changes:
American Stock Exchange, Inc., 11386, 11387 (2 documents)
Philadelphia Stock Exchange, Inc., 11388–11390 (3 documents)
Applications, hearings, determinations, etc.:
Public utility holding company filings, 11391 (2 documents)

Textile Agreements Implementation Committee
See Committee for the Implementation of Textile Agreements

Transportation Department
See also Coast Guard; Federal Aviation Administration; Federal Highway Administration; National Highway Traffic Safety Administration; Research and Special Programs Administration
NOTICES
Aviation proceedings:
Hearings, etc.—
Laredo Air, Inc., 11392
Tri Freight, Inc., 11392
Westates Airlines, Inc., 11392

Uniformed Services University of the Health Sciences
NOTICES
Meetings; Sunshine Act, 11394 (2 documents)

United States Information Agency
NOTICES
Grants; availability, etc.:
Private non-profit organizations in support of international educational and cultural activities, 11393

Separate Parts In This Issue

Part II
Department of Energy and Nuclear Regulatory Commission, 11398

Part III
Department of Health and Human Services, Food and Drug Administration, 11402

Part IV
Department of Labor, Occupational and Safety and Health Administration, 11414

Part V
Department of Transportation, Coast Guard, 11440

Part VI
Department of Agriculture, Commodity Credit Corporation, 11474

Reader Aids
Additional information, including a list of public laws, telephone numbers, and finding aids, appears in the Reader Aids section at the end of this issue.

CFR PARTS AFFECTED IN THIS ISSUE

A cumulative list of the parts affected this month can be found in the Reader Aids section at the end of this issue.

7 CFR
1421 11239
Proposed Rules:
449 11299
1497 11474
1498 11474

8 CFR
Proposed Rules:
3 11300
208 11300
236 11300
242 11300
253 11300

10 CFR
1010 11240
Proposed Rules:
2 11310
50 11310

12 CFR
563 (2 documents) 11242, 11243

14 CFR
39 11246

16 CFR
13 (2 documents) 11247

21 CFR
184 11247
558 11251
800 11251
803 11251
807 11251
808 11251
809 11251
812 11251
813 11251
820 11251
860 11251
861 11251
864 11251
866 11251
876 11251
895 11251
1002 11251
1005 11251
1010 11251
1020 11251
1030 11251
1040 11251
1050 11251
Proposed Rules:
133 11312
175 11402
176 11402
177 11402
178 11402
561 11313

23 CFR
1204 11255
1205 11255

24 CFR
200 11270

25 CFR
61 11271

29 CFR
1910 11414

30 CFR
75 11395

33 CFR
Proposed Rules:
110 11395

40 CFR
52 11273
180 11274
Proposed Rules:
52 11314

43 CFR
Proposed Rules:
3160 11318

44 CFR
80 11275
82 11275
83 11275

45 CFR
36 11279

46 CFR
Proposed Rules:
Ch. I 11440

48 CFR
Proposed Rules:
916 11318
931 11318
952 11318

49 CFR
571 11280
Proposed Rules:
171 11320
173 11320

50 CFR
672 11297
Proposed Rules:
644 11321

Rules and Regulations

Federal Register
Vol. 53, No. 66
Wednesday, April 6, 1988

This section of the FEDERAL REGISTER contains regulatory documents having general applicability and legal effect, most of which are keyed to and codified in the Code of Federal Regulations, which is published under 50 titles pursuant to 44 U.S.C. 1510.
The Code of Federal Regulations is sold by the Superintendent of Documents. Prices of new books are listed in the first FEDERAL REGISTER issue of each week.

DEPARTMENT OF AGRICULTURE

Commodity Credit Corporation

7 CFR Part 1421

Grains and Similarly Handled Commodities

AGENCY: Commodity Credit Corporation (CCC), USDA.

ACTION: Interim rule.

SUMMARY: The Food Security Act of 1985 (the "1985 Act") and the Omnibus Budget Reconciliation Act of 1987 (the "1987 Act"), amended the Agricultural Act of 1949 with respect to the quantities of wheat and feed grains which must be maintained in the Farmer Owned Reserve ("FOR"). This interim rule amends 7 CFR Part 1421 to implement provisions of the 1985 and 1987 Acts. In order to provide CCC greater flexibility in maintaining these quantities, this interim rule also amends 7 CFR Part 1421 to provide that the term of the FOR agreements will be as determined and announced by CCC.

DATES: Effective Date: This interim rule shall become effective April 6, 1988. Comments must be received on or before May 6, 1988, in order to be assured of consideration.

ADDRESS: Interested persons are invited to submit written comments to the Director, Cotton, Grain and Rice Price Support Division, Agricultural Stabilization and Conservation Service (ASCS), USDA, P.O. Box 2415, Washington, DC 20013.

FOR FURTHER INFORMATION CONTACT: Lynda Flament, Program Specialist, Cotton, Grain and Rice Price Support Division, ASCS, USDA, P.O. Box 2415, Washington, DC 20013; Phone: (202) 447-4229.

SUPPLEMENTARY INFORMATION: This interim rule has been reviewed under USDA procedures established in accordance with the provisions of Departmental Regulation 1512-1 and Executive Order 12291 and has been classified as "non-major". It has been determined that the provisions of this interim rule will not result in: (1) Annual effects on the economy of $100 million or more; (2) major increases in costs or prices for consumers, individual industries, Federal, State, or local government agencies or geographic regions; or (3) significant adverse effects on competition, employment, investment, productivity, innovation, or ability of U.S.-based enterprises to compete with foreign-based enterprises in domestic or export markets.

It has been determined by an environmental evaluation that this action will have no significant impact on the quality of the human environment. Therefore, neither an environmental assessment nor an environmental impact statement is needed.

The title and number of the Federal Domestic Program to which this interim rule applies are: Title—Grain Reserve Program Number-10.067, as found in the catalog of Federal Domestic Assistance.

It has been determined that the Regulatory Flexibility Act is not applicable to this rule since CCC is not required by 5 U.S.C. 553 or any other provision of law to publish a notice of proposed rulemaking with respect to the subject matter of this rule.

This activity is not subject to the provisions of Executive Order 12372 which requires intergovernmental consultation with State and local officials. See the Notice related to 7 CFR Part 3015, Subpart V, published at 48 FR 29115 (June 24, 1983).

Section 110 of the Agricultural Act of 1949, as amended (the "1949 Act"), provides that the Secretary of Agriculture shall implement a program under which producers of wheat and feed grains would be able to store these commodities during periods of abundant supply; to extend the time for their orderly marketing; and to provide for a reliable supply of wheat and feed grains. This program is referred to as the Farmer-Owned Reserve ("FOR") Program. Section 110 was amended by the 1985 and 1987 Acts with respect to the quantities of wheat and feed grains which must be maintained in the FOR. Accordingly, section 110(e)(2) provides that the maximum quantities of wheat and feed grains which may be maintained in the FOR are 30 and 15 percent of the estimated total domestic and export use of wheat and feed grains, respectively, during the current marketing year unless the Secretary determines that an increased quantity, not to exceed 110 percent of these respective quantities, is necessary to achieve the purposes of section 110. The minimum FOR quantities set forth in section 110 are 300 million bushels of wheat and 450 million bushels of feed grains.

The maximum quantities to be maintained in the FOR are determined and announced annually. For example, the proposed determination for these quantities which would be in effect for the 1988 crop years for wheat and feed grains are set forth at 52 FR 15358 and 26707, respectively. Accordingly, since section 110 specifically sets forth the manner in which these quantities are to be determined and such determinations are announced annually in the **Federal Register**, 7 CFR 1421.742 is revised to provide that maximum FOR quantities shall be determined and announced annually by the Executive Vice President, CCC.

Prior to its amendment by the 1985 Act, section 110 of the 1949 Act provided that FOR agreements could not be for a term of less than three years or more than five year. The 1985 Act amended section 110 to provide that such agreements could not be for a term of less than three years but that these agreements could be extended as warranted by market conditions.

Accordingly, 7 CFR 1421.741 is amended by providing that: (1) FOR agreements shall be for a term based upon market conditions existing at the time the FOR agreement is executed, as determined and announced by CCC; and (2) such agreements may be extended by CCC as warranted by market conditions.

The 1985 Act also amended section 110 of the 1949 Act to provide that FOR agreements may be repaid prior to maturity when certain market prices (i.e., "trigger release levels") are attained. Generally, trigger release levels are the higher of 140 percent of the nonrecourse loan rate which has been established for the commodity or the established price (i.e., the "target price") of the commodity. Accordingly, 7 CFR 1421.753 is amended by deleting references to the manner in which the

Secretary previously determined and announced such levels.

Due to the increase in the use of wheat and feed grains and the constant change in market conditions, it has been determined that this interim rule shall become effective upon publication in the **Federal Register.** Comments, however, are requested and will be taken into consideration in the review of this rule.

List of Subjects in 7 CFR Part 1421

Grains, Loan programs/agriculture, Price support programs, Warehouses.

Interim Rule

Accordingly, 7 CFR Part 1421 is amended to read as follows:

PART 1421—GRAINS AND SIMILARLY HANDLED COMMODITIES

1. The authority citation for 7 CFR Part 1421 is revised to read as follows:

Authority: Secs. 4 and 5 of the Commodity Credit Corporation Charter Act, as amended, 62 Stat. 1070, as amended, 1072 (15 U.S.C. 714b and 714c); Secs. 101, 101A, 105C, 107D, 110, 201, 301, 401, 403, and 405 of the Agricultural Act of 1949, as amended, 63 Stat. 1051, as amended, 99 Stat. 1419, as amended, 1395, as amended, 1383, as amended, 91 Stat. 951, as amended, 63 Stat. 1052, as amended, 1053, as amended, 1054, as amended, (7 U.S.C. 1441, 1441-1, 1444e, 1445b-3, 1445c, 1446, 1447, 1421, 1423, and 1425).

2. 7 CFR 1421.741 is revised to read as follows:

§ 1421.741 Length of reserve agreements.

The length of reserve agreements shall be as determined and announced by the Executive Vice President, CCC, based upon market conditions which exist at the time such agreements are executed by CCC. Such agreements may be extended by CCC, at the producers option, upon maturity if CCC determines that an extension is warranted based upon existing market conditions.

3. 7 CFR 1421.742 is revised to read as follows:

§ 1421.742 Reserve Quantity.

The maximum quantity of wheat and feed grains stored under the program shall be determined and announced annually by the Executive Vice President, CCC.

§ 1421.753 [Amended]

4. 7 CFR 1421.753(a) is amended by removing the third, fourth, and fifth sentences.

Signed at Washington, DC, on April 1, 1988.

Vern Neppl,

Acting Executive Vice President, Commodity Credit Corporation.

[FR Doc. 88-7566 Filed 4-5-88; 8:45 am]

BILLING CODE 3410-05-M

DEPARTMENT OF ENERGY

Office of General Counsel

10 CFR Part 1010

Conduct of Employees; Statements of Employment and Financial Interest, and Interests in Energy Concerns

AGENCY: Department of Energy.

ACTION: Final rule.

SUMMARY: The Department of Energy is amending the Department's Conduct of Employees regulations (10 CFR Part 1010) by revising the provisions on exemption of Department of Energy employees at or below GS-12 from the financial reporting requirements of section 603 of the Department of Energy Organization Act (Pub L. 95-91).

EFFECTIVE DATE: April 6, 1988.

FOR FURTHER INFORMATION CONTACT: Thomas C. Buchanan, Attorney-Advisor, Office of Assistant General Counsel for General Law, GC-43, Department of Energy, 1000 Independence Avenue SW., Washington, DC 20585, (202) 586-1522.

SUPPLEMENTARY INFORMATION:

I. Background

Section 603(a) of the Department of Energy Organization Act (Pub. L. 95-91) requires all employees of the Department of Energy to file a report disclosing their energy concern interests with the Secretary of Energy not later than May 15 of each year. Such reports are also required to be filed within 30 days of commencement and termination of employment with the Department. Section 603(c) of the Act requires the Secretary to identify, by rule, specific positions, or classes thereof, which are of a nonregulatory or nonpolicymaking nature at or below grade GS-12, and to exempt such positions and the individuals occupying those positions from the filing requirements.

The requirement for identification of exemption positions is implemented by § 1010.403 of the Department of Energy Conduct of Employees regulations (10 CFR Part 1010), which provides for a listing of exempt positions in Appendix I of the regulations. Currently, such exempt positions are listed in Appendix I by position title, series, and grade, and there is a different listing for each Departmental element. This has proved to be an inefficient method of identification.

This rule amends § 1010.403 and Appendix I to provide for identification of exempt positions on a Department-wide basis, rather than by Departmental element, and by series and grade only, rather than by individual position titles. In addition, the rule permits the Counselor (defined in § 1010.103(f) of the Conduct of Employees regulations to mean the General Counsel of the Department or the General Counsel of the Federal Energy Regulatory Commission, as appropriate, or their delegates) to identify, from time to time, specific positions with duties and responsibilities substantially similar to those already covered by Apendix I, and to exempt such specific positions from the filing requirements. A list of such exempt positions will be maintained by the Conselor. The list of specific positions will be published at intervals established by the Counselor.

II. Opportunity for Public Comment

A proposed rulemaking was published on pages 17765-17767 of the **Federal Register** of May 12, 1987. A 30-day period was provided for comments. (A correction was published on page 18647 of the **Federal Register** of May 18, 1987, addressing several typographical errors in the May 12 notice.)

Only one individual responded. The Manager of a DOE field office suggested that all positions in the Engineering Series (GS-800) should be exempted at GS-12 or below. However, review of the duties and responsibilities of individuals in GS-800 series positions indicated that, on a Department-wide basis, it is not appropriate to exempt *all* GS-800 series positions that are above GS-9 and below GS-13. (Where appropriate, GS-800 series positions have been exempted at GS-12 and below, but some GS-800 series positions have been exempted only at GS-9 and below.) Therefore, the grade level of exempt positions in the GS-800 series remains as published in the notice of proposed rulemaking. (The affected field office may, of course, apply to the Counselor for ad hoc exemptions for specific positions, in accordance with the terms of the new rule.)

The same individual also suggested that the grade level of exempt positions in the Security Administration Series (GS-080), shown as GS-12 or below in the proposed regulations, be changed to GS-9 or below. However, review of the duties and responsibilities of employees occupying positions at GS-12 or below in the GS-080 series indicated that they are not of a "policymaking" or "regulatory" nature, the criteria established by the statute. Therefore, the grade level of exempt positions in the GS-080 series remain at GS-12 or below.

No other comments were received. However, a new paragraph (f)(3) has been added to the final rule to clarify

the periods covered by the new exemptions. In the case of employees occupying positions listed in Appendix I, the amendment has been made applicable to statements of financial interests required to be filed for any period beginning on or after January 1, 1987. In the case of employees occupying positions receiving ad hoc exemptions by the Counselor, the amendment has been made applicable to reports due on or after the date the position is exempted.

III. Review Under Executive Order 12291

It has been determined that this regulation is not a "major rule" within the meaning of Executive Order 12291 (February 17, 1981) because the amendment will not result in (1) an annual effect on the economy of $100 million or more; (2) a major increase in costs or prices for consumers, individual industries, Federal, State, or local government agencies, or geographic regions; or (3) significant adverse effects on competition, employment, investment, productivity, or innovation, or on the ability of United States-based enterprises to compete in domestic or export markets. Accordingly, a regulatory impact analysis is not required.

IV. Review Under the Regulatory Flexibility Act

Pursuant to section 605 of the Regulatory Flexibility Act (Pub. L. 96-354), it is hereby certified that this regulation will not have a significant economic impact on a substantial number of small entities within the meaning of the Act. It is related solely to internal agency organization, management, or personnel.

V. Review Under the National Environmental Policy Act

DOE has determined that this rule does not constitute a major Federal action significantly affecting the quality of the human environment.

VI. Review Under the Paperwork Reduction Act

This rule does not impose a "collection of information" requirement, as defined in 44 U.S.C. 3502(4).

List of Subjects in 10 CFR Part 1010

Conflict of interest, conduct of employees.

In consideration of the foregoing, Part 1010 of Title 10 of the Code of Federal Regulations is amended, as set forth below:

Issued in Washington, DC, on March 25, 1988.

John S. Herrington,
Secretary of Energy.

PART 1010—CONDUCT OF EMPLOYEES

1. The authority citation for Part 1010 is revised to read as follows:

Authority: Sec. 601-608, 644, Pub. L. 95-91, 91 Stat. 591-596, 599 (42 U.S.C. 7211-7218, 7254); sec. 522, Pub. L. 94-163, 89 Stat. 961 (42 U.S.C. 6392); sec. 308, Pub. L. 95-39, 91 Stat. 189 (42 U.S.C. 5816a); 5 U.S.C. app. 207(a); 18 U.S.C. 201-209; E.O. 11222, as amended by E.O. 12565.

2. Section 1010.403 is amended by revising paragraph (a) and adding paragraph (f) to read as follows:

§ 1010.403 Statements of employment and financial interests, and interests in energy concerns.

(a) (Applicable to FERC) The filing requirements of this section are applicable to all DOE employees, except those whose positions are exempt pursuant to paragragh (f) of this section.

* * * * *

(f) (Applicable to FERC) (1) Section 603(c) of Pub. L. 95-91 (42 U.S.C. 7213(c)) requires the Secretary to identify specific positions, or classes thereof, within the Department which are of a nonregulatory or nonpolicymaking nature at or below GS-12 of the General Schedule, and to exempt such positions or classes and the individuals occupying those positions from the reporting requirements of section 603 of the Act. Pursuant to section 603(c), the following positions are exempt from the filing requirements of this section commencing with the dates provided in paragraph (f)(3) of this section:

(i) All positions in the classes, identified by series and grades, listed in Appendix I, except those occupied by individuals described in paragraph (f)(2) of this section; and

(ii) Any specific position at or below GS-12 of the General Schedule, or the equivalent, the duties and responsibilities of which are found by the Counselor to be substantially similar to those included in the classes listed in Appendix I to this part. A list of specific positions that have been exempted from the filing requirements of this section pursuant to this paragraph shall be maintained by the Counselor. The list shall be published at intervals established by the Counselor.

(2) Notwithstanding the provisions of paragraph (f)(1) of this section, an individual who is a supervisory employee (see § 1010.103(t) for definition of "supervisory employee"), a member of an award fee board, or a contracting officer's technical representative, is not exempt from the reporting requirements of section 603 of Pub. L. 95-91.

(3) An employee who occupies a position that has been exempted pursuant to paragraph (f)(1)(i) of this section shall not be required to file a report pursuant to this section for any period beginning on or after January 1, 1987. An employee who occupies a position that has been exempted pursuant to paragraph (f)(1)(ii) of this section shall not be required to file any report due under this section on or after the date the employee's position has been exempted. Reports for any period before January 1, 1987, in the case of an employee who occupies a position that has been exempted pursuant to paragraph (f)(1)(i) of this section, and reports due before a position has been exempted, in the case of an employee who occupies a position that has been exempted pursuant to paragraph (f)(1)(ii), shall continue to be subject to the rules regarding exemption that were in effect before April 6, 1988.

3. Appendix I to Part 1010 is revised to read as follows:

Note.—Appendix I, as originally published at 44 FR 24709 *et seq.* (April 26, 1979), did not appear in the Code of Federal Regulations. The revised Appendix I will appear in the Code of Federal Regulations.

Appendix I—List of Classes of Positions Exempt from the Disclosure Requirements of Section 603 of the DOE Organization Act

The following is a list of classes of DOE positions (identified by series and grade) within the Department of Energy that are of a nonregulatory or nonpolicymaking nature at or below GS-12 of the General Schedule or the equivalent. The individuals who occupy positions that are within these classes (except individuals described in § 1010.403(f)(2)) have been exempted for the financial disclosure requirements of section 603 of the Department of Energy Organization Act (Pub. L. 95-91). (Individuals in certain confidential positions in the excepted service who fall within these classes may, nevertheless, be required to file a financial disclosure report under the Ethics in Government Act of 1978 (Pub. L. 95-521, as amended).)

All positions at GS-12 or below in the following occupational series:

018	084	132
019	085	134
020	090	140
023	099	150
028	110	160
080	130	170
081	131	180

199	486	1306
201	499	1310
203	501	1311
212	503	1320
221	525	1321
230	530	1340
233	540	1341
235	544	1350
246	560	1370
260	561	1371
301	590	1372
302	599	1373
303	602	1374
304	610	1399
305	690	1410
309	802	1411
312	806	1412
313	807	1421
318	808	1510
322	809	1515
332	817	1520
334	818	1521
335	856	1529
341	899	1530
342	904	1531
343	950	1550
344	963	1599
345	986	1601
346	1001	1640
350	1016	1654
351	1020	1670
356	1035	1701
361	1060	1712
385	1071	1910
388	1082	2001
390	1083	2003
391	1084	2005
392	1087	2010
393	[1] 1101	2030
394	1103	2050
401	1104	2101
403	1105	2102
404	1106	2130
408	1107	2131
430	1150	2132
460	1160	2134
462	1202	2151
482	1301	2181

[1] For Office of Hearings and Appeals, exemption for series 1101 positions is at GS-9 and below:

All positions at GS-11 or below in the following occupational series:

510

All positions at GS-9 or below in the following occupational series:

801	850	1102
803	855	1130
804	880	1170
810	881	1171
819	893	1220
830	896	1221
840	[2] 1101	1222

[2] For all other offices, exemption for series 1101 is at GS-12 and below.

[FR Doc. 88-7471 Filed 4-5-88; 8:45 am]

BILLING CODE 6450-01-M

FEDERAL HOME LOAN BANK BOARD

12 CFR Part 563

[No. 88-216]

Criminal Referrals; Money Laundering Crimes

Date: March 29, 1988.

AGENCY: Federal Home Loan Bank Board.

ACTION: Final rule.

SUMMARY: The Federal Home Loan Bank Board ("Board" or "FHLBB") is amending its Criminal Referral regulation (12 CFR 563.18(d)) by revising its description of bank bribery to conform to a legislative amendment and by adding a requirement to report money laundering related crimes also in accordance with recent statutory amendments. In addition, the Board is modifying the regulation to relax the filing requirement when no suspect can be identified and to eliminate overlap between the criminal referral requirement and the Board's regulation requiring that records be kept of certain external crimes (12 CFR 563a.5(b)).

EFFECTIVE DATE: April 6, 1988.

FOR FURTHER INFORMATION CONTACT: John Downing, Assistant Director, Office of Enforcement, (202) 653-2604, Federal Home Loan Bank Board, 1700 G Street, NW., Washington, DC 20552.

SUPPLEMENTARY INFORMATION: The Board is publishing this final rule in order to make amendments of a technical and minor nature to 12 CFR 563.18(d), its regulation requiring that referrals of known or suspected crimes involving insured institutions or service corporations be made to appropriate law enforcement authorities if they involve affiliated persons or actual or anticipated losses of more than $1,000. The amendments revise the regulation in accordance with changes made in the federal criminal code with respect to bank bribery and money laundering related offenses. The changes also relax and clarify the filing requirements. In addition, the Board is revising its criminal referral form, FHLBB Form 366, in accordance with these amendments. The existing form may still be used until the revised form is approved and made available.

The Board has determined to revise its regulation in four respects. First, the regulation is revised to include several money laundering related crimes that Congress recently enacted. 18 U.S.C. 1956 and 1957 and 31 U.S.C. 5324. Normally no loss to the institution will result from money laundering. Consequently the regulation is amended to require that such crimes be reported regardless of loss. In such cases only Part A of the Board's Form 366 need be used. Second, the Board has revised its description of the crime of bank bribery (18 U.S.C. 215) in accordance with the 1986 amendment to that statute, which makes corrupt intent an element of the crime.

Third, based on the experience of federal criminal investigators and prosecutors, as related to the Board's staff, and the Board's desire to lessen the burden on insured institutions and service corporations when this can be accomplished without seriously compromising the criminal justice system, insured institutions and service corporations are no longer required to make a referral when there is no substantial factual basis for identifying a suspect, unless the actual or anticipated loss totals $5,000 or more. Of course, a referral that does not meet this threshold is permitted and encouraged whenever loss is suffered.

Fourth, while all instances of robbery, burglary and non-employee larceny must still be reported to law enforcement agencies, it is no longer required that Form 366 be filed in these instances. Normally, these types of external crime are investigated by the FBI prior to the time a Form 366 would be filed. However, the recordkeeping requirements of 12 CFR 563a.5(b) will continue to apply and the crime must still be reported to law enforcement authorities, although Form 366 need not be used. As long as the requirements of § 563a.5(b) are satisfied and the crime is reported, filing Form 366 is no longer required for robbery, burglary or non-employee larceny.

In addition, in order to accommodate the varying structures of insured institutions the Board has substituted the term "the next ranking officer" for "a senior vice president" in describing who is responsible for reporting to the board of directors if the chief executive officer is suspected of criminal conduct.

Pursuant to 12 CFR 508.11 and 508.14, the Board finds that, because of the minor and technical nature of this corrective amendment, notice and public comment and the 30-day delay of the effective date are unnecessary.

List of Subjects in 12 CFR Part 563

Bank deposit insurance, Investments, Reporting and recordkeeping requirements, Savings and loan associations.

Accordingly, the Board hereby amends Part 563, Subchapter D, Chapter V, Title 12, Code of Federal Regulations, as set forth below:

SUBCHAPTER D—FEDERAL SAVINGS AND LOAN INSURANCE CORPORATION

PART 563—OPERATIONS

1. The authority citation for Part 563 continues to read as follows:

Authority: Sec. 1, 47 Stat. 725, as amended (12 U.S.C. 1421 *et seq.*); sec. 5A, 47 Stat. 727, as added by sec. 1, 64 Stat. 256, as amended (12 U.S.C. 1425a); sec. 5B, 47 Stat. 727, as added by sec. 4, 80 Stat. 824, as amended (12

U.S.C. 1425b); sec. 17, 47 Stat. 736, as amended (12 U.S.C. 1437); sec. 2, 48 Stat. 128, as amended (12 U.S.C. 1462); sec. 5, 48 Stat. 132, as amended (12 U.S.C. 1464); secs. 401–407, 48 Stat. 1255–1260, as amended (12 U.S.C. 1724–1730); sec. 408, 82 Stat. 5, as amended (12 U.S.C. 1730a); Reorg. Plan No. 3 of 1947, 12 FR 4981, 3 CFR, 1943–1948 Comp., p. 1071.

2. Amend § 563.18 by revising paragraph (d) to read as follows:

§ 563.18 Criminal referrals and other reports or statements.

* * * * *

(d) *Reports of crimes, suspected crimes, and unexplained losses.* (1) *Purpose and scope.* Insured institutions and service corporations are required promptly to notify the appropriate law enforcement authorities and the Corporation after discovery of known or suspected criminal acts:

(i) If those acts involve affiliated persons (as defined in § 561.29 of this subchapter);

(ii) If those acts involve actual or anticipated losses of more than $1,000 and the institution has a substantial factual basis for identifying a suspect or group of suspects;

(iii) If those acts result in a loss of $5,000 or more, regardless of whether a suspect is identified; or

(iv) If money laundering, engaging in monetary transactions known to have been derived from unlawful activities, or structuring a transaction to evade the reporting requirements of the Bank Secrecy Act (also known as the Currency and Foreign Transactions Act) is known or suspected.

This paragraph (d)(1) applies to known or suspected crimes involving insured institutions and service corporations committed either by their employees or others and to crimes or suspected crimes against another financial institution believed to be committed by a person associated with the reporting insured institution or a service corporation. As used in this paragraph (d)(1) the phrase "suspected crimes" refers to all matters, including unexplained losses, for which there is a known factual basis for a belief that a crime has been or may have been committed. In the case of a crime or suspected crime against a service corporation that is wholly owned by an insured institution, either the service corporation or the insured institution may make the report.

(2) *Filing of reports.* Other than under paragraph (d)(3) of this section and other than robberies, burglaries and non-employee larcenies for which a record must be kept under § 563a.5 of this subchapter, an insured institution or a service corporation shall notify the appropriate law enforcement authorities and the Corporation by filing FHLBB Form 366 within 14 business days after discovery of any crime, suspected crime, or unexplained loss that meets the criteria of paragraph (d)(1) of this section and is suffered by the insured institution or service corporation, including:

(i) Embezzlement, non-employee larceny, check-kiting operation, fraud or attempted fraud, unexplained loss, or other known or suspected misapplication of funds or other things of value belonging to an insured institution or entrusted to its care;

(ii) Bank bribery, the corrupt offering, solicitation, or acceptance of things of value in connection with any transaction or business of a financial institution;

(iii) False statements or reports of overvaluation of land, property or security, or omission to state or attempt to conceal information for the purpose of influencing the actions of an insured institution, the Corporation or the Board; or

(iv) Other violations of statutes as described in the instructions to Form 366.

(3) *Oral reports.* Required reports may be made orally in emergency cases, such as when it is likely that evidence or witnesses will become unavailable before a written report can be made; or where other circumstances dictate an immediate referral. In such cases, the report shall be documented by later completion and filing of the prescribed form(s), if required under paragraph (d)(2) of this section.

(4) *Notification of the Board of Directors.* The chief executive officer of the insured institution or his designee shall notify the board of directors concerning any report filed pursuant to this paragraph (d)(4) by the institution or a service corporation in which it has an ownership interest not later than its next regularly schedule meeting following the filing of the report. If the chief executive officer is suspected of being involved in the violation, the next ranking officer shall notify the institution's Board.

(5) *Maintenance of records.* Reports made under this section and related records of all crimes or suspected crimes shall be maintained at the insured institution's home office for three years.

By the Federal Home Loan Bank Board.

John F. Ghizzoni,

Assistant Secretary.

[FR Doc. 88-7515 Filed 4-5-88; 8:45 am]

BILLING CODE 6720-01-M

12 CFR Part 563

[No. 88-222]

Regulatory Capital Requirements of Insured Institutions

Date: March 30, 1988.

AGENCY: Federal Loan Bank Board.

ACTION: Final rule.

SUMMARY: The Federal Home Loan Bank Board ("Board"), as operating head of the Federal Savings and Loan Insurance Corporation ("FSLIC"), is amending its regulation setting the regulatory capital requirements for institutions insured by the FSLIC ("insured institutions"). Today's final rule changes the method of computing the April calculation of industry profits by basing it on the median return on assets of all insured institutions.

EFFECTIVE DATE: April 29, 1988.

FOR FURTHER INFORMATION CONTACT: Jerilyn Rogin, Staff Attorney, (202) 377-7018, Christina Gattuso, Regulatory Counsel, (202) 377-6649, Regulations and Legislation Division, Office of General Counsel; Donald G. Edwards, Director, Financial and Quantitative Analysis Division, (202) 377-6914, Donald Bisenius, Financial Economist, (202) 377-6759, Office of Policy and Economic Research, Federal Home Loan Bank Board, 1700 G Street, NW., Washington, DC 20552.

SUPPLEMENTARY INFORMATION: On August 15, 1986, the Board adopted its revised regulatory capital regulation establishing the levels of capital required for all insured institutions. *See* Board Res. No. 86-857, 51 FR 33565-88 (Sept. 22, 1986) ("capital regulation"). Among other things, § 563.13 of the capital regulation requires that insured institutions gradually increase their capital levels based, in part, on overall industry profitability. The reason for the gradual increase is that the Board recognizes that internal generation of capital from retained earnings and external generation of capital from conversion to stock form or issuance of securities takes time and depends, in part, on market conditions.

At the same time, however, the Board considers it essential that insured institutions raise their capital levels as rapidly as possible. The preamble to the capital regulation states that insured institutions have an immediate need for greater capital to support their asset base. 51 FR at 33571-73. The Board also set forth comprehensive policy reasons for requiring insured institutions to increase their capital levels, including

the recognition that the former required capital levels did not provide adequate protection for insured institutions, depositors, or the FSLIC. 51 FR at 33569–70.

As further explained in the preamble to the capital regulation, higher capital levels for insured institutions are not only necessary but feasible for the majority of the industry. An historical review of capital levels in the industry reveals that much higher levels have been sustained during certain periods in the past. The feasibility of attaining the capital levels required by the regulation over a relatively short time period was confirmed by the Board's Office of Policy and Economic Research. *See An Analysis of the Proposed Capital Requirements for Thrift Institutions: A Staff Economic Study* (August, 1986). The Board finds no reason to alter that conclusion and, accordingly, reaffirms its belief that most solvent institutions can realistically expect to achieve higher capital levels. *Id.*

Pursuant to § 563.13(b)(2)(iv) of the capital regulation, the increase in capital required on all insured institution's base liabilities is tied to the prior calendar year's aggregate average return on assets ("ROA") of all insured institutions. Insured institutions are required to increase the capital on their base liabilities by a percentage of the annual calculation of that average ROA.[1] That paragraph also provides that the Board will compute and publish the calculation in April of each year, based upon data for the prior calendar year.

On April 30, 1987, the Board released its computation of the industry's 1986 April calculation: the aggregate annual rate of return on the aggregate average level of assets of all insured institutions collectively was 0.09 percent. 52 FR 17470 (May 8, 1987). With an average ROA of 0.09 percent, it would take approximately forty years for the capital requirements to be fully phased-in.

Description of the Proposal

On June 10, 1987, the Board proposed a rule concerning regulatory capital requirements that would have altered the method by which the April calculation of industry profits is computed. 52 FR 23845 (June 25, 1987.)[2] The proposal would have amended § 563.13(b)(2)(iv) of the capital regulation concerning the method by which the figure representing annual industry profitability, used to calculate each insured institution's required level of regulatory capital, is computed.

Specifically, the Board proposed to amend § 563.13(b)(2)(iv) by using a median rather than a mean as the appropriate measure of the central tendency of insured institutions' ROAs. Second, the Board proposed to correct the deficiencies of the current measure of industry profitability by computing the April calculation to exclude all insured institutions that were insolvent pursuant to generally accepted accounting principles ("GAAP insolvent"), rather than including all insured institutions in the calculation. Third, the Board proposed to change the timing of its calculation and publication of the calculation for the prior year by computing this figure in the fourth quarter of each year based on the four quarters ending on the June 30th preceding the computation and having the required increases in insured institutions' liability factors become effective the following January 1 and July 1.

Comments were specifically requested concerning the proposed use of the median rather than the mean as the measure of central tendency for computation of the April calculation and concerning the proposed exclusion from the April calculation of GAAP insolvent institutions.

Discussion of Comments

The Board received 23 public comments in response to the proposal. Of those comments, the majority (17) were submitted by insured institutions; five were submitted by industry trade associations; and one was from an individual. The comment period ended on August 24, 1987, but the Board considered late-filed letters. After carefully considering the issues raised by the commenters, which are more fully discussed below, the Board has determined to adopt the proposal, with certain modifications, as a final rule.

With respect to the general concept of amending the method by which the calculation is computed in order to better reflect the ROA of all institutions, twelve commenters responded. Three commenters expressed their general support for the amendment. Several commenters, however, expressed concerns with respect to the amendment's potential effects. For example, one commenter feared that such an amendment would raise required levels and force insured institutions into making high risk investments just to comply with the resulting increase in required capital levels and thereby would discourage safe, long-term economic strategies. Another maintained that the amendment would place even more insured institutions into regulatory noncompliance, resulting in deterioration of public confidence in the industry.

With regard to the proposed change from the use of the mean to the median as the measurement of central tendency, eight commenters responded. Four of the commenters favored the change, noting, for example, that the use of the median will tend to eliminate the distortions in the calculation caused by extremely profitable and extremely unprofitable institutions. Another commenter asserted that use of the median will more effectively fulfill the Board's original goal of reaching higher capital levels as quickly as feasible. However, three commenters objected that the use of the median will distort the calculation by giving equal weight to all insured institutions, from small *de novo* institutions to $30 billion institutions.

The Board believes that the financial condition of the industry necessitates revision of the adjustment mechanism for increasing required capital levels. Specifically, after careful consideration of the public comments on this issue, the Board has determined to use the median rather than the mean as the measure of central tendency of insured institutions' ROAs. The fundamental reason for this decision is that the mean is too sensitive to extremely high or low ROAs. This sensitivity becomes especially critical in an environment in which the unhealthy segment of the industry operates at a severe loss.

Accordingly, the Board does not believe that the mean profitability figure accurately reflects the ability of the industry to raise capital. Rather, the Board believes that the median ROA should be used because it focuses on the profitability of the fiftieth percentile institution and on the ranking that generates that fiftieth percentile institution. This more accurately reflects the ability of the large majority of insured institutions to advance toward higher minimum required capital levels.

The use of the median ROA does not imply that half of the industry will be

[1] Pursuant to § 563.13(b)(2)(v), the appropriate percentage is determined by whether an insured institution falls within the standard group, with base ratios of three percent; or the lower group, with base ratios below three percent.

[2] As part of the same Board action, the Board proposed both to delete the provision in the regulatory capital regulation concerning the effect upon base liabilities of branch sales and to amend the earnings-based accounts regulation to conform its provisions establishing regulatory capital thresholds to current regulatory capital requirements. *Id.* At this time, the Board is not proceeding with final rules in these areas. The Board reserves the right to revisit these issues at a later time, however.

unable to meet higher capital requirements. Rather, as would be the case with adjusting the requirement based on any average measure of profitability, some portion of the industry will not be able to meet the increased requirements through retained earnings alone. As indicated in the preamble to the capital regulation, however, most of these institutions can meet their increased requirement through a number of alternative strategies including conversion to stock form, a secondary stock issuance, of subordinated debt, or because they already have capital in excess of the requirement on their books.

In response to the comment that the use of the median distorts the calculation by giving equal weight to all institutions, the Board believes that such equal weighting is not a distortion, but instead better reflects a representative institution's ability to raise capital. The former use of a weighted mean, where each institution's profitability was weighted by its assets, gave undue influence to the profitability of a few large institutions and did not reflect a representative institution's ability to raise capital. In the Board's view, the use of a median avoids this distortion.

Concerning the exclusion of GAAP insolvent insured institutions from those institutions whose ROAs are considered when determining the April calculation, seven commenters responded. Although one commenter agreed with the concept, most of the commenters suggested alternatives to the exclusion of GAAP insolvent institutions, including the exclusion only of institutions in the management consignment program and the exclusion only of those institutions that are insolvent under regulatory accounting practices. Two commenters urged that no insured institutions be excluded, reasoning that the annual figure, even if it is only .09 percent, is the only figure that accurately reflects the economic health and financial status of the whole industry. One commenter suggested that the Board simply remove from the calculation the 20 percent most profitable and the 20 percent least profitable of all institutions. Another commenter noted that, although the exclusion of either GAAP insolvent institutions or of other groups, such as FSLIC cases, would yield roughly equivalent results, the Board should not exclude any institution if does not intend to exclude such groups for all other purposes, including, for example, the calculation of aggregate operating results. Rather, the commenter asserted, the calculation should be based upon the median of all insured institutions.

After careful consideration of the comments received, the Board has determined not to exclude GAAP insolvent or any other group of institutions from the calculation. In light of the Board's determination to use the median ROA, the need to eliminate groups of institutions is significantly reduced. The Board concludes that the inclusion of the insolvent institutions will not seriously impede the goal of reaching a higher capital requirement and higher capital levels for thrift institutions.

Moreover, the Board has determined that the timing and release of the calculation as it currently appears in the capital regulation is the most practical and accurate way to proceed. The April calculation will be made based on the median ROA of all insured institutions for the calendar year preceding computation of the calculation. Thus, required capital levels will reflect this change for the quarter beginning on July 1 and ending on September 30, 1988.

Finally, because it is an accurate description and has become a term of art in the industry, the Board has determined to continue to use the phrase "April calculation" in lieu of the proposed "annual calculation".

Description of Final Rule

Today's amendment changes the method of computing the annual April calculation of industry profits by utilizing the median rather than the mean of all insured institutions' ROAs.

Final Regulatory Flexibility Analysis

Pursuant to section 3 of the Regulatory Flexibility Act, 5 U.S.C. 604, the Board is providing the following regulatory flexibility analysis.

1. *Need for and objectives of the rule.* These elements are incorporated above in **SUPPLEMENTARY INFORMATION.**

2. *Issues raised by comments and agency assessment and response.* These elements are incorporated above in **SUPPLEMENTARY INFORMATION.**

3. *Significant alternatives minimizing small-entity impact and agency response.* The Small Business Administration defines a small financial institution as "a commercial bank or savings and loan association, the assets of which, for the preceding fiscal year, do not exceed $100 million." 13 CFR 121.13(a) (1987). Therefore, the approximate number of small entities to which the rule would apply are the 1,651 insured institutions that had assets totaling $100 million or less as of December 31, 1986.

The rule would not impose any unnecessary financial, recordkeeping or administrative burdens on small insured institutions. The rule would authorize the Board and the FSLIC to compute the annual April calculation for determining industry profits and required capital levels by basing the computation on the median return on assets of all insured institutions. The rule would treat small institutions in a manner similar to large ones. Since that April calculation and the amount of capital required pursuant to the capital regulation is proportionate to an institution's level of liabilities and investments, there would be no disproportionate economic or regulatory impact on small institutions.

List of Subjects in 12 CFR Part 563

Bank deposit insurance, Investments, Reporting and recordkeeping requirements, Savings and loan associations.

Accordingly, the Board hereby amends Part 563, Subchapter D, Chapter V, Title 12, Code of Federal Regulations, as set forth below.

SUBCHAPTER D—FEDERAL SAVINGS AND LOAN INSURANCE CORPORATION

PART 563—OPERATIONS

1. The authority citation for Part 563 is revised to read as follows:

Authority: Sec. 1, 47 Stat. 725, as amended (12 U.S.C. 1421 *et seq.*); sec. 5A, 47 Stat. 727, as added by sec. 1, 64 Stat. 256, as amended (12 U.S.C. 1425a); sec. 5B, 47 Stat. 727, as added by sec. 4, 80 Stat. 824, as amended (12 U.S.C. 1425b); sec. 17, 47 Stat. 736, as amended (12 U.S.C. 1437); sec. 2, 48 Stat. 128, as amended (12 U.S.C. 1462); sec. 5, 48 Stat. 132, as amended (12 U.S.C. 1464); secs. 401–407, 48 Stat. 1255–1260, as amended (12 U.S.C. 1724–1730); sec. 408, 82 Stat. 5, as amended (12 U.S.C. 1730a); Reorg. Plan No. 3 of 1947, 12 FR 4981, 3 CFR, 1943–1948 Comp., p 1071.

2. Amend § 563.13 by revising paragraph (b)(2)(iv) to read as follows:

§ 563.13 Regulatory capital requirement.

* * * * *

(b) * * *

(2) *Calculation of base liabilities amount.* * * *

(iv) "April calculation" means the median return on assets of all insured institutions for the calendar year preceding computation of the April calculation multiplied by the appropriate percentage. The percentage to be used for insured institutions in the standard group is 75 percent. The percentage to be used for insured institutions in the lower group is 90 percent. The Board will compute and publish the calculation in April of each year.

* * * * *

By the Federal Home Loan Bank Board.

John F. Ghizzoni,

Assistant Secretary.

[FR Doc. 88-7516 Filed 4-5-88; 8:45 am]

BILLING CODE 6720-01-M

DEPARTMENT OF TRANSPORTATION

Federal Aviation Administration

14 CFR Part 39

[Docket No. 86-ASW-39; Amdt. 39-5887]

Airworthiness Directives; Hercules; Lenair Corporation; Smith Helicopters; and West Coast Fabrications; Model UH-1E, UH-1L, and TH-1L Helicopters

AGENCY: Federal Aviation Administration (FAA), DOT.

ACTION: Final rule.

SUMMARY: This amendment adopts a new airworthiness directive (AD) which requires repetitive inspections and imposes a maximum service life on certain rod end bearing assemblies in the flight control system on Model UH-1E, UH-1L, and TH-1L helicopters (certified by Hercules; Lenair Corporation; Smith Helicopters; and West Coast Fabrications). The AD is needed to preclude possible failure of the main rotor assembly which, in turn, could cause loss of the helcopter.

DATES: *Effective Date:* May 6, 1988.

Compliance: As indicated in body of the AD.

FOR FURTHER INFORMATION CONTACT: Mr. Tom Henry, Helicopter Certification Branch, ASW-170, Federal Aviation Administration, Fort Worth, Texas 76193-0170, telephone (817) 624-5168.

SUPPLEMENTARY INFORMATION: A proposal to amend Part 39 of the Federal Aviation Regulations (FAR) to include an airworthiness directive requiring repetitive inspections of the rod end bearing assembly to check for cracks and establish a 600-hour service life on newly added parts on certain model UH-1E, UH-1L, and TH-1L helicopters (modified by Hercules; Lenair Corporation; Smith Helicopters; and West Coast Fabrications) was published in the **Federal Register** on December 23, 1987 (52 FR 48542). The proposal was prompted by a U.S. Army Aviation command message which reported a rod end bearing assembly on an AH-1 helicopter failed at 790 hours' time in service due to a crack which originated near a staking mark on the bearing housing. Also, the FAA was informed by message from the Pensacola Naval Aviation Depot that the U.S. Navy would require a review of service life history on the P/N 204-076-428 rod end bearing assemblies for all Model UH-1E, UH-1L, TH-1L, and HH-1k helicopters. Bearings with 600 or more hours' time in service are to be replaced when serviceable parts become available. Failure of the rod end bearing assembly could result in possible failure of the main rotor assembly and loss of the helicopter.

Since this condition is likely to exist on FAA certificated UH-1E, UH-1L, and TH-1L helicopters of the same military design, an AD is being issued which requires repetitive inspections of the rod end bearing assembly to check for cracks and establishes a 600-hour service life on newly added parts.

Interested persons have been afforded an opportunity to participate in the making of this amendment. No comments were received. Accordingly, the proposal is adopted without change.

The FAA has determined that this regulation involves approximately 19 aircraft with an estimated cost of approximately $16,500 per aircraft. Costs would not exceed $26,000 for any one operator. Therefore, I certify that this action (1) is not a "major rule" under Executive Order 12291; (2) is not a "significant rule" under DOT Regulatory Policies and Procedures (44 FR 11034; February 26, 1979); and (3) will not have a significant impact, positive or negative, on a substantial number of small entities under the criteria of the Regulatory Flexibility Act. A copy of the final evaluation prepared for this action is contained in the regulatory docket. A copy of it may be obtained from the Regional Rules Docket.

List of Subjects in 14 CFR Part 39

Air transportation, Aircraft, Aviation safety, Safety.

Adoption of the Amendment

Accordingly, pursuant to the authority delegated to me by the Administrator, the Federal Aviation Administration amends § 39.13 of Part 39 of the FAR as follows:

PART 39—AIRWORTHINESS DIRECTIVES

1. The authority citation for Part 39 continues to read as follows:

Authority: 49 U.S.C. 1354(a), 1421, and 1423; 49 U.S.C. 106(g) (Revised Pub. L. 97-449, January 12, 1983); and 14 CFR 11.89.

§ 39.13 [Amended]

2. By adding the following new AD:

Hercules; Lenair Corporation; Smith Helicopters; and West Coast Fabrications; Applies to Models UH-1E, UH-1L, and TH-1L helicopters certified by Hercules; Lenair Corporation; Smith Helicopters, and West Coast Fabrications certified in any category that have P/N 204-076-428-1, -3, or -5 rod end bearing assemblies installed.

Compliance is required as indicated, unless already accomplished.

To detect possible cracks in the collective and cyclic rod end bearing assemblies, P/N 204-076-428-1, -3, or -5, installed on Models UH-1E, UH-1L, and TH-1L helicopters, accomplish the following:

(a) Prior to the next flight after the effective date of this AD and thereafter at intervals not to exceed 10 hours' time in service from the last inspection, visually inspect the rod end bearing assemblies for cracks. Perform the visual inspections by disconnecting the cyclic and collective control tube assemblies from the swashplate horns and the collective pitch control lever.

(b) Whenever the rod end bearing assemblies are removed for any reason, inspect for cracks using a fluorescent penetrant or equivalent method.

Note: Inspections specified by paragraphs (a) and (b) above are not required on rod end bearing assembly P/N 204-076-428-5 having documented time in service of less than 600 hours.

(c) If a crack is found during these inspections replace the rod end bearing with a serviceable part prior to further flight.

(d) Replace rod end bearing assemblies, P/N 204-076-428-1 or -3 within 11 calendar months from the effective date of this AD with rod end bearing assembly, P/N 204-076-428-5, having a documented known service life of less than 600 hours' time in service.

(e) Replace rod end bearing assembly P/N 204-076-428-5, not having a documented known service life, or those with greater than 600 hours' time in service, within 11 calendar months from the effective date of this AD with rod end bearing assembly P/N 204-076-428-5 having a documented service life of less than 600 hours' time in service.

(f) Retire from service rod end bearing assembly, P/N 204-076-428-5 at 600 hours' time in service or less after initial replacement described in paragraphs (d) and (e).

(g) An alternate method of compliance which provides an equivalent level of safety with this AD may be used when approved by the Manager, Helicopter Certification Branch, Federal Aviation Administration, Fort Worth, Texas, 76193-0170.

This amendment becomes effective May 6, 1988.

Issued in Fort Worth, Texas, on March 24, 1988.

L.B. Andriesen,

Acting Director, Southwest Region.

[FR Doc. 88-7497 Filed 4-5-88; 8:45 am]

BILLING CODE 4910-13-M

FEDERAL TRADE COMMISSION

16 CFR Part 13

[Dkt. C-3223]

Great Earth International, Inc.; Prohibited Trade Practices, and Affirmative Corrective Actions

AGENCY: Federal Trade Commission.

ACTION: Consent order.

SUMMARY: In settlement of alleged violations of federal law prohibiting unfair acts and practices and unfair methods of competition, this consent order prohibits, among other things, a Santa Ana, Calif.-based food supplements franchisor from making certain claims about the supplements' effectiveness. Respondent is also prohibited from using the name "Growth Hormone Releaser," "GHR," or any similar name unless it has substantiation that the product stimulates the body or pituitary gland to release significantly greater amounts of human growth hormone in users than in non-users.

DATE: Complaint and Order issued March 15, 1988.[1]

FOR FURTHER INFORMATION CONTACT: Janice Frankle, FTC/S-4631, Washington, DC 20580. (202) 326-3022.

SUPPLEMENTARY INFORMATION: On Tuesday, January 5, 1988, there was published in the **Federal Register**, 53 FR 141, a proposed consent agreement with analysis In the Matter of Great Earth International, Inc., a corporation, for the purpose of soliciting public comment. Interested parties were given sixty (60) days in which to submit comments, suggestions or objections regarding the proposed form of order.

No comments having been received, the Commission has ordered the issuance of the complaint in the form contemplated by the agreement, made its jurisdictional findings and entered its order to cease and desist, as set forth in the proposed consent agreement, in disposition of this proceeding.

The prohibited trade practices and/or corrective actions, as codified under 16 CFR Part 13, are as follows; Subpart—Advertising Falsely Or Misleadingly: § 13.10 Advertising falsely or misleadingly; § 13.170 Qualities or properties of product or service; § 13.170-52 Medicinal, therapeutic, healthful, etc.; § 13.170-70 Preventive or protective; § 13.170-74 Reducing, non-fattening, low-calorie, etc.; § 13.190 Results; § 13.205 Scientific or other relevant facts. Subpart—Corrective Actions And/Or Requirements: § 13.533 Corrective actions and/or requirements; § 13.533-10 Corrective advertising; § 13.533-45 Maintain records; § 13.533-45(a) Advertising substantiation; § 13.533-45(k) Records, in general; § 13.533-50 Maintain means of communication. Subpart—Misrepresenting Oneself And Goods—Goods: § 13.1590 Composition; § 13.1590-20 Federal Trade Commission Act; § 13.1710 Qualities or properties; § 13.1730 Results; § 13.1740 Scientific or other relevant facts.

List of Subjects in 16 CFR Part 13

Food Supplements, Trade practices.

(Sec. 6, 38 Stat. 721; 15 U.S.C. 46. Interprets or applies sec. 5, 38 Stat. 719, as amended; 15 U.S.C. 45, 52)

Benjamin I. Berman,

Acting Secretary.

[FR Doc. 88-7467 Filed 4-5-88; 8:45 am]

BILLING CODE 6750-01-M

[1] Copies of the Complaint and the Decision and Order are available from the Commission's Public Reference Branch, H-130, 6th Street & Pennsylvania Avenue NW., Washington, DC 20580.

16 CFR Part 13

[Dkt. C-3224]

Supermarket Development Corp., et al.; Prohibited Trade Practices, and Affirmative Corrective Actions

AGENCY: Federal Trade Commission.

ACTION: Consent order.

SUMMARY: In settlement of alleged violations of federal law prohibiting unfair acts and practices and unfair methods of competition, this consent order requires, among other things, Furr's, a wholly owned subsidiary of Supermarket Development Corporation, to divest supermarkets in 12 towns and cities in Texas and New Mexico, to obtain prior Commission approval for future acquisitions by Furr's of grocery store located in the El Paso division, and to hold separate the El Paso division until the required divestitures are completed.

DATE: Complaint and Order issued March 17, 1988.[1]

FOR FURTHER INFORMATION CONTACT: Joan Greenbaum, FTC/S-3302, Washington, DC 20580. (202) 326-2629.

SUPPLEMENTARY INFORMATION: On Thursday, August 20, 1987, there was published in the **Federal Register**, 52 FR 31412, a proposed consent agreement with analysis In the Matter of Supermarket Development Corporation and SSI Associates, L.P., for the purpose of soliciting public comment. Interested parties were given sixty (60) days in which to submit comments, suggestions or objections regarding the proposed form of order.

Comments were filed and considered by the Commission. The Commission has ordered the issuance of the complaint in the form contemplated by the agreement, made its jurisdictional findings and entered its order to cease and desist, as set forth in the proposed consent agreement, in disposition of this proceeding.

The prohibited trade practices and/or corrective actions, as codified under 16 CFR Part 13, are as follows: Subpart—Acquiring Corporate Stock Or Assets: § 13.5 Acquiring corporate stock or assets; § 13.5-20 Federal Trade Commission Act. Subpart—Corrective Actions And/Or Requirements: § 13.533 Corrective actions and/or requirements; § 13.533-45 Maintain records; § 13.533-45(k) Records, in general; § 13.533-50 Maintain means of communication.

List of Subjects in 16 CFR Part 13

Grocery Stores, Supermarkets, Trade practices.

(Sec. 6, 38 Stat. 721; 15 U.S.C. 46. Interpret or apply sec. 5, 38 Stat. 719, as amended; sec. 7, 38 Stat. 731, as amended; 15 U.S.C. 45, 18)

Benjamin I. Berman,

Acting Secretary.

[FR Doc. 88-7468 Filed 4-5-88; 8:45 am]

BILLING CODE 6750-01-M

[1] Copies of the Complaint and the Decision and Order are available from the Commission's Public Reference Branch, H-130, 6th Street & Pennsylvania Avenue NW., Washington, DC 20580.

DEPARTMENT OF HEALTH AND HUMAN SERVICES

Food and Drug Administration

21 CFR Part 184

[Docket No. 75G-0265]

Nisin Preparation; Affirmation of GRAS Status as a Direct Human Food Ingredient

AGENCY: Food and Drug Administration.

ACTION: Final rule.

SUMMARY: The Food and Drug Administration (FDA) is affirming that nisin preparation produced from *Streptococcus lactis* Lancefield Group N is generally recognized as safe (GRAS) for use as an optional antimicrobial agent to inhibit the outgrowth of *Clostridium botulinum* spores and toxin formation in certain pasterurized cheese spreads. This action responds to a petition filed by Aplin and Barrett Ltd., requesting that nisin be affirmed as

GRAS for use as an antimicrobial preservative in food.

DATES: Effective April 6, 1988. The Director of the Office of the Federal Register approves the incorportion by reference of certain publications at 21 CFR 184.1538 in the introductory text of paragraph (b) and in paragraph (d) effective April 6, 1988.

ADDRESS: Background information on the environmental and economic effects and the references are on display in the Dockets Management Branch (HFA-305), Food and Drug Administration, Rm. 4-62, 5600 Fishers Lane, Rockville, MD 20857.

FOR FURTHER INFORMATION CONTACT: John W. Gordon, Center for Food Safety and Applied Nutrition (HFF-334), Food and Drug Administration, 200 C St. SW., Washington, DC 20204, 202-426-5487.

SUPPLEMENTARY INFORMATION:

I. Introduction

Under the procedures described in § 170.35 (21 CFR 170.35), Aplin and Barrett Ltd., Trowbridge, Wilts., England BA14 8HS submitted a petition (GRASP 5G0049) proposing affirmation that nisin is generally recognized as safe (GRAS) for use in food as an antimicrobial preservative. FDA published a notice of the filing of this petition in the **Federal Register** of Sepetember 17, 1975 (40 FR 42912), and gave interested persons an opportunity to submit comments to the Hearing Clerk (since renamed Dockets Management Branch) (HFA-305), Food and Drug Administration, Rm. 4-62, 5600 Fishers Lane, Rockville, MD 20857. FDA did not receive any comments in response to the notice.

On April 17, 1980, the petitioner limited its request for GRAS affirmation to the use of the nisin as an antimicrobial agent in certain pasteurized process cheese covered by 21 CFR 133.169 and 133.170 and in certain pasteurized process cheese spreads covered by 21 CFR 133.179 and 133.180. The petition was amended by the petitioner further on September 30, 1984, to request GRAS affirmation of nisin for use as an antimicrobial agent to inhibit the outgrowth of *Clostridium botulinum* (*C. botulinum*) spores and toxin formation in certain standardized pasteurized cheese spreads. Concurrently, the petitioner requested that the appropriate standards of identity for these cheese spreads be amended to permit the use of nisin. The cheese spreads affected are covered by the standards of identity listed in 21 CFR 133.175 *Pasteurized cheese spread;* 21 CFR 133.176 *Pasteurized cheese spread with fruits, vegetables, or meats;* 21 CFR 133.179 *Pasteurized process cheese spread;* and 21 CFR 133.180 *Pasteurized process cheese spread with fruits, vegetables, or meats.*

Published elsewhere in this issue of the **Federal Register** is a proposal to amend the standards of identity for these foods to provide for the use of nisin preparation as an optional antimicrobial agent.

The petition for GRAS affirmation includes data that show that nisin has been used experimentally outside of the United States as an antimicrobial preservative in a variety of foods, including cheeses and cheese products, since 1953. However, nisin has been used commercially outside of the United States only since 1960 (Refs. 1 and 2). Nisin has no history of common use in food in the United States. Based on these facts, the agency has concluded that nisin is not GRAS based on history of common use in food before 1958. However, the agency has determined that the petition meets the requirements of 21 CFR 170.30(b) for consideration of nisin as GRAS based on scientific procedures.

In evaluating this petition, as amended, the agency considered the following issues: (1) Identity and production of the ingredient; (2) proposed food uses; and (3) safety of the proposed food uses.

II. Data Summary and Evaluation

A. Identify and Production of the Ingredient

As early as 1928, scientists were aware that milk may contain a substance that can inhibit microbial growth. In 1947, Shattock and Mattick (Ref. 3) identified the microbial growth inhibitory substance as a product of lactice streptococci. They found that it is a strain of *Streptococcus lactis* (*S. lactis*) belonging to Lancefield Group N. Shattock and Mattick gave the microbial growth inhibitory substance the name "nisin."

Various strains of the organism *S. lactis* occur naturally in milk and are referred to as "cheese starter organisms." Commercial grade nisin is prepared from a pure culture fermentation of nonpathogenic strains of *S. lactis* Lancefield Group N with penicillin free, heat-treated sterilized nonfat milk digest. The product is then concenterated by a foaming process, extracted by salt precipition under acid conditions, and dried by a spray process. The product, as described in the petition, is a mixture or preparation, rather than a discrete entity, of *S. lactis* Lancefield Group N. Thus, the agency concludes that the appropriate name for the product is "nisin preparation" rather than "nisin," and the product hereinafter is called "nisin preparation" (NP).

The antimicrobial material in NP is "nisin," which, as described in the petition, is a group of closely related peptides that occur naturally and have an average molecular weight of 3,510. These peptides consist of the amino acids alanine, glycine, serine, aspartic acid, valine, histidine, lysine, leucine, isoleucine, methionine, proline, lanthionine, and beta-methyllanthionine.

Section 184.1538(c) contains specifications for NP (See Joint FAO/WHO Expert Committee on Food Additives, "Specifications for Identity and Purity of Some Antibiotics," FAO Nutrition Meeting Report Series, No. 45A (1969) (Ref. 4)) to assure that the character of NP remains consistent with the product evaluated in the petition.

B. The Proposed Food Uses of Nisin Preparation

The subject petition, as amended, seeks GRAS status for the use of NP sufficient to deliver 250 parts per million (ppm) of nisin as an inhibitor of the outgrowth of *C. botulinum* spores and toxin formation in pasteurized cheese spreads and pasteurized process cheese spreads covered by the standards of identity in 21 CFR 133.175, 133.176, 133.179, and 133.180. Although not mentioned in the petition, NP has been used outside of the United States as an antimicrobial preservative in various foods including canned pears, canned mushrooms, and canned tomatoes, as well as in process cheese products.

The standards of identity for the cheese spreads affected by the NP petition provide for a product with a relatively high moisture content (more than 44 percent but not more than 60 percent) and in which salt is an optional ingredient. In general, cheese spreads manufactured under these standards contain 50 to 54 percent moisture and 2 percent salt. In addition, pasteurized process cheese spreads may contain emulsifiers at levels of not more than 3 percent by the weight of the spread. Most contain about 2.5 percent emulsifier.

Under these conditions, the outgrowth of *C. botulinum* spores and resultant toxin formation is unlikely. However, unpublished studies in the petition (Refs. 5 and 6) show that at the higher moisture levels, the possibility exists that *C. botulinum* spore growth and toxin formation could occur when salt or emulsifier concentrations are lowered. These studies report that the minimum effective concentration of nisin against *C. botulinum* is greater than 100 ppm, but that quantities of nisin of 150 ppm

and 250 ppm are fully effective. In these studies (Refs. 5 and 6), using experimental formulations of process cheese spreads, the salt content was lowered, and the moisture content was increased above 55 percent. In addition, the phosphate emulsifier content varied from 2.5 percent to 1.3 percent.

In these studies, nisin prevented the outgrowth of *C. botulinum* spores and toxin formation at the level of (1) 12.5 ppm, when the salt content was reduced below 2 percent, and the moisture content (50 to 54 percent) and phosphate emulsifier content (2.5 percent) were normal; (2) 250 ppm, when the moisture content was above 55 percent, and the phosphate emulsifier and salt content were reduced below 2.5 percent and 2 percent, respectively; and (3) 250 ppm, when the moisture content was normal (50 to 54 percent), no salt was added, and the phosphate emulsifier content was reduced to 1.7 percent or less. Thus, the data from these studies demonstrate that 250 ppm nisin is effective in inhibiting the growth of *C. botulinum* spores and toxin formation in cheese spreads that have a high moisture (55 percent), low salt (below 2 percent), or low emulsifier (below 2.5 percent) content. For this reason, the agency concludes that the current good manufacturing practice level of NP for the requested use in the cheese spreads covered by the food standards is the quantity of NP that delivers a maximum of 250 ppm of nisin in the finished product.

Based upon the proposed uses of NP to provide a final concentration of 250 ppm of nisin in pasteurized cheese spreads and pasteurized process cheese spreads, the agency has calculated the estimated daily intake (EDI) for nisin to be 1 milligram per person per day (mg/person/day) (Ref. 7). This EDI corresponds to an intake of approximately 50 mg/person/day of NP, based on the use of NP containing 1×10^6 international units of nisin per gram (g) or approximately 2.5 percent nisin by weight (Ref. 6).

C. Safety of Nisin Preparation

The petition includes published and unpublished safety studies to support the safety of NP. The material tested in these studies was NP. Because of the design of these studies, however, many of the results were expressed in terms of the active ingredient nisin. The petition includes the following studies:

1. Acute Toxicity Studies

The acute oral dose (i.e., LD_{50}) for NP was found to be 6,950 milligrams per kilogram body weight (mg/kg body weight) for the mouse (Ref. 8). This dose corresponds to 174 mg nisin/kg body weight.

2. Subchronic Toxicity Studies

The petition contains data from two short-term studies. In one of the studies, rats were fed cheese containing NP equivalent to 1,204,000, 1,806,000, and 2,408,000 units of nisin/kg body weight for 12 weeks (Ref. 9). These levels correspond to 30.1, 45.2, and 60.2 mg nisin/kg body weight/day. In the other study, rats were fed diets containing NP at a level equivalent to 10,000 units of nisin per g of feed for 12 weeks (Ref. 10). This level corresponds to approximately 15 to 25 mg nisin/kg body weight/day. Neither study reported any difference between control and test animals in any of the parameters tested (growth, fertility, and gross/microscopic pathology).

3. Chronic Toxicity Study

The petition included a published chronic feeding study with a one-generation reproduction phase (Ref. 9) in which Wistar male and female rats of the F_0 (parental) generation were fed diets containing NP at levels equivalent to 33,300 units and 3,330,000 units of nisin per kg of food in the diet for 2 years. These levels correspond to .049 mg and 4.9 mg of nisin/kg body weight/day. The F_1 generation (offspring) male and female rats were fed the same diet as their parents for 40 weeks. No differences were reported between control and experimental animals of the F_0 generation in survival or reproductive performance. Organ weights and gross pathological and histological findings were normal in F_0 and F_1 males and females. Tests for hepatic, renal, and gastrointestinal function were normal in F_1 rats.

4. Reproduction Study

In support of the safety of NP the petitioner also submitted an unpublished three-generation reproductive study (Ref. 11) in which NP was administered orally to rats. The animals were fed a standard diet containing 0, 0.2, 1.0, or 5 percent NP for 26 weeks. These levels of NP correspond to 0.005, .025, or 0.125 percent of nisin or 13, 15, or 75 mg nisin/kg body weight/day. In the study, no difference was found between the test animals and controls in any of the test parameters measured (survival, growth, reproductive performance, and gross/microscopic pathology).

5. Sensitization Studies

The petition also included a study that shows that guinea pigs (Ref. 9) could not be sensitized to NP when NP was administered orally. No evidence of NP sensitization could be found in a comprehensive search by the agency of the scientific literature since 1980, suggesting that there are no published reports of nisin causing allergic reactions.

6. In Vitro Studies

An in vitro study using NP (Ref. 12) showed that nisin is degraded by pancreatin (an intestinal enzyme preparation), whereas certain therapeutic antibiotics that were tested are not, suggesting that nisin would not affect the intestinal flora. The author of the study hypothesized that nisin is rapidly hydrolyzed and inactivated shortly after it leaves the stomach.

7. Cross-resistance Studies

There is no evidence of cross resistance in important pathogenic organisms as a result of the use of NP. For example, studies in *Staphylococcus aureus, Escherichia coli,* and *Micrococcus pyogenes* var. *aureus* (Refs. 13 and 14) showed that exposure to NP did not result in any cross resistance that might affect the therapeutic use of other antibiotics.

Based on the chronic feeding study in rats (Ref. 9), the agency calculated an acceptable daily intake (ADI) for nisin of 2.9 mg/person/day (Ref. 15). This ADI exceeds the EDI (1 mg/person/day) of nisin from the proposed use of NP in pasteurized cheese spread (Ref. 7).

III. Conclusion on Proposed Uses of Nisin Preparation

Based on its review of the data submitted in the GRAS affirmation petition on the use of nisin preparation and of other relevant information, the agency concludes:

(1) The appropriate name for the ingredient is "nisin preparation" (NP) rather than "nisin."

(2) NP is adequately identified by the method of manufacture and specifications contained in the petition.

(3) NP sufficient to deliver 250 ppm nisin exhibits a functional effect in those standardized cheese spreads that contain high moisture, low salt, or low emulsifier content.

(4) The proposed use of NP is safe, based on the safety studies on NP. The ADI for nisin was calculated as 2.9 mg/person/day based on a chronic feeding study of NP. This level is more than two and one-half times larger than the EDI of 1 mg/person/day for nisin.

(5) NP is not eligible for GRAS status based on common use in food prior to January 1, 1958, because it had no

history of common use in food before that date.

(6) NP is GRAS based on scientific procedures. This conclusion is based on published safety data (including a chronic feeding study) which have been supplemented with unpublished data.

Therefore, the agency is affirming that NP is GRAS for use as an optional antimicrobial agent at a level sufficient to deliver 250 ppm nisin to inhibit the outgrowth of *C. botulinum* spores and toxin formation in the following pasteurized cheese spreads: pasteurized cheese spread under 21 CFR 133.175; pasteurized process cheese spread under 21 CFR 133.179; pasteurized cheese spread with fruits, vegetables, or meats under 21 CFR 133.176; and pasteurized process cheese spread with fruits, vegetables, or meats under 21 CFR 133.180.

IV. Environmental Effects

The agency has carefully considered the potential environmental effects of this action and has concluded that the action will not have a significant impact on the human environment and that an environmental impact statement is not required. The agency's finding of no significant impact and the evidence supporting that finding may be seen in the Dockets Management Branch (address above) between 9 a.m. and 4 p.m., Monday through Friday. Under FDA's regulations implementing the National Environmental Policy Act (21 CFR Part 25), an action of this type would require an abbreviated environmental assessment under 21 CFR 25.31a(b)(5).

V. Economic Effects

FDA, in accordance with the Regulatory Flexibility Act, has considered the effect that this final rule would have on small entities including small businesses and has determined that the effect of this final rule is to provide for the use of NP as an optional antimicrobial ingredient to inhibit the outgrowth of *C. botulinum* spores and toxin formation in pasteurized cheese spreads. Therefore, FDA certifies in accordance with section 605(b) of the Regulatory Flexibility Act that no significant economic impact on a substantial number of small entities will derive from this action.

In accordance with Executive Order 12291, FDA examined the economic effects of this rule. The agency has determined that it is not a major rule as defined by the Order.

The agency's findings of no economic impact and no significant impact on a substantial number of small entities, and the evidence supporting these findings are contained in a threshold assessment which may be seen in the Dockets Management Branch (address above).

VI. References

The following references have been placed on display in the Dockets Management Branch (address above) and may be seen by interested persons between 9 a.m. and 4 p.m., Monday through Friday.

1. Hawley, H. B., "Nisin In Food Technology," *Food Manufacturer*, pp. 1–11, August and September 1957.
2. Hawley, H. B., "Antibiotics In Food," *Laboratory Practice* pp. 659–653, September 1960.
3. Shattock, P.M.F., and Mattick, A.T.R., "Further Observation on an Inhibitory Substance (Nisin) from *Lactic Streptococci*," *The Lancet*, pp. 5–12, 1947.
4. Joint FAO/WHO Expert Committee on Food Additives, "Specifications for Identity and Purity of Some Antibiotics," FAO Nutrition Meetings Report Series, No. 45A, 1969.
5. Taylor, S.L., Somers, E.B., and Krueger, L.A., "Antibotulinal Effectiveness of Nisaplin in Process Cheese Spreads," (Unpublished report, 1982).
6. Taylor, S.L., Sommers, E.B., and Krueger, L.A., "Antibotulinal Effectiveness of Nisaplin in Reduced Sodium Process Cheese Spreads," (Unpublished report, 1984).
7. Memorandum of October 26, 1984, from John P. Modderman to John W. Gordon.
8. Hara, S., Yakazu, K., Nakakawaji, K., Takenchi, T., Kobayashi, T., Sata, M., Imai, Z., and Shibuya, T., "An Investigation of Toxicity of Nisin," *Tokyo Medical University Journal, 20:175–207, 1962.*
9. Frazer, A.C., Sharratt, M., and Hickman, J.R., "The Biological Effect of Food Additives—Nisin," *Journal of Science of Food and Agriculture*, 13:32–42, 1962. (Review article covers several studies).
10. Pesquera, T.I., "Nisin—Its Use, Estimation and Toxicology in Sterilized Milk," *Revista Espanola de Lecheria*, 59:16, 1966.
11. "Effect of Nisaplin on Reproductive Function of Multiple Generations in Rats," (Unpublished report, Huntington Research Centre, Cambridgeshire, England, 1984.
12. Heinemann, B., and Williams, R., "Inactivation of Nisin by Pancreatin," *Journal of Dairy Science*, 49:312–314, 1966.
13. Carlson, S., and Bauer H.M., "Nisin, eine antibakterieller/Wirkstoff aus *Streptococcus lactis* unter berucksichtingung des Resistenzproblems" *Archin fur Hygiene und Bakteriologie*, 141:6ff, 1975.
14. Szybalski, W., "Cross resistance of *Micrococcus pyogenes* var. *aureus* to Thirty-four Antimicrobial Drugs," *Antibiotics and Chemotherapy*, 3:1095–1102, 1953.
15. Memorandum of November 9, 1984, from Alfred N. Milbert to John W. Gordon.

List of Subjects in 21 CFR Part 184

Food ingredients, Incorporation by reference.

Therefore, under the Federal Food, Drug, and Cosmetic Act and under authority delegated to the Commissioner of Food and Drugs and redelegated to the Director, Center for Food Safety and Applied Nutrition, Part 184 is amended as follows:

PART 184—DIRECT FOOD SUBSTANCES AFFIRMED AS GENERALLY RECOGNIZED AS SAFE

1. The authority citation for 21 CFR Part 184 continues to read as follows:

Authority: Secs. 201(s), 402, 409, 701, 52 Stat. 1046–1047 as amended, 1055–1056 as amended, 72 Stat. 1784–1788 as amended (21 U.S.C. 321(s), 342, 348, 371); 21 CFR 5.10, 5.61.

2. Part 184 is amended by adding new § 184.1538 to read as follows:

§ 184.1538 Nisin preparation.

(a) Nisin preparation is derived from pure culture fermentations of certain strains of *Streptococcus lactis* Lancefield Group N. Nisin preparation contains nisin (CAS Reg. No. 1414-45-5), a group of related peptides with antibiotic activity.

(b) The ingredient is a concentrate or dry material that meets the specifications that follow when it is tested as described in "Specifications for Identity and Purity of Some Antibiotics," World Health Organization, FAO Nutrition Meeting Report Series, No. 45A, 1969, which is incorporated by reference. Copies are available from the Dockets Management Branch (HFA-305), Food and Drug Administration, Rm. 4-62, 5600 Fishers Lane, Rockville, MD 20857, or available for inspection at the Office of the Federal Register, 1100 L St. NW., Washington, DC 20408

(1) Nisin content, not less than 900 international units per milligram.

(2) Arsenic, not more than 1 part per million.

(3) Lead, not more than 2 parts per million.

(4) Zinc, not more than 25 parts per million.

(5) Copper, zinc plus copper not more than 50 parts per million.

(6) Total plate count, not more than 10 per gram.

(7) *Escherichia coli*, absent in 10 grams.

(8) *Salmonella*, absent in 10 grams.

(9) Coagulase positive staphylococci, absent in 10 grams.

(c) The ingredient is used as an antimicrobial agent as defined in § 170.3(o)(2) of this chapter to inhibit the outgrowth of *Clostridium botulinum* spores and toxin formation in pasteurized cheese spreads and pasteurized process cheese spreads

listed in § 133.175; pasteurized cheese spread with fruits, vegetables, or meats as defined in § 133.176; pasteurized process cheese spread as defined in § 133.179; pasteurized process cheese spread with fruits, vegetables, or meats as defined in § 133.180 of this chapter.

(d) The ingredient is used at levels not to exceed good manufacturing practice in accordance with § 184.1(b)(1) of this chapter. The current good manufacturing practice level is the quantity of the ingredient that delivers a maximum of 250 parts per million of nisin in the finished product as determined by the British Standards Institution Methods, "Methods for the Estimation and Differentiation of Nisin in Processed Cheese," BS 4020 (1974), which is incorporated by reference. Copies are available from the Dockets Management Branch (HFA-305), Food and Drug Administration, RM. 4-62, 5600 Fishers Lane, Rockville, MD 20857, or available for inspection at the Office of the Federal Register, 1100 L Street NW., Washington, DC 20408.

Dated: March 25, 1988.

Richard J. Ronk,

Acting Director, Center for Food Safety and Applied Nutrition.

[FR Doc. 88-7459 Filed 4-5-88; 8:45 am]

BILLING CODE 4160-01-M

21 CFR PART 558

New Animal Drugs for Use in Animal Feeds; Lasalocid and Oxytetracycline; Correction

AGENCY: Food and Drug Administration.

ACTION: Final rule; correction.

SUMMARY: The Food and Drug Administration (FDA) is correcting the final rule that amended the animal drug regulations to reflect approval of a new animal drug application (NADA) filed by Hoffman-La Roche, Inc., providing for the safe and effective use of a Type C cattle feed manufactured from separately approved lasalocid sodium and oxytetracycline (monoalkyl trimethyl ammonium salt) Type A articles (52 FR 48095; December 18, 1987). The supplementary information in the final rule inadvertently omitted the approved level of 100-gram-per-pound oxytetracycline (monoalkyl trimethyl ammonium salt). This document corrects that error.

FOR FURTHER INFORMATION CONTACT: Jack C. Taylor, Center for Veterinary Medicine (HFV-126), Food and Drug Administration, 5600 Fishers Lane, Rockville, MD 20857, 301-443-5247.

SUPPLEMENTARY INFORMATION: In FR Doc 87-29036, appearing on page 48095 in the **Federal Register** of Friday, December 18, 1987 (52 FR 48095), in the second column under the heading "Supplementary Information" in the ninth line, the phrase "10- or 50-" should read "10-, 50-, or 100-".

Dated: March 31, 1988.

Richard A. Carnevale,

Deputy Director, Office of New Animal Drug Evaluation, Center for Veterinary Medicine.

[FR Doc. 88-7525 Filed 4-5-88; 8:45 am]

BILLING CODE 4160-01-M

21 CFR Parts 800, 803, 807, 808, 809, 812, 813, 820, 860, 861, 864, 866, 876, 895, 1002, 1005, 1010, 1020, 1030, 1040, and 1050

[Docket No. 87N-0373]

Medical Device and Radiological Health Regulations; Editorial Amendments

AGENCY: Food and Drug Administration.

ACTION: Final rule.

SUMMARY: The Food and Drug Administration (FDA) is amending certain of its regulations on medical device and radiological health to correct cross-references and typographical errors and to update the titles and mailing symbols of certain organizational units. This action will improve the accuracy and clarity of the regulations.

EFFECTIVE DATE: April 6, 1988.

FOR FURTHER INFORMATION CONTACT: T. Rada Proehl, Regulations Editorial Staff (HFC-222), Food and Drug Administration, 5600 Fishers Lane, Rockville, MD 20857, 301-443-2994.

SUPPLEMENTARY INFORMATION: FDA is revising certain of its regulations on medical devices and radiological health to correct cross-references and typographical errors, to update the titles and mailing symbols of certain organizational units, and to clarify the regulations. The affected regulations are 21 CFR 800.12(c) (the second time it appears), 803.33(b), 807.22(a), 807.35(b), 807.37 (a) and (b)(2), 807.90(a), 807.95(c)(1), 808.87(a), 809.5(a) (1), (2), (3), and (4) and (b), 812.2(e), 812.19, 812.20 (b)(9) and (d), 812.38(d), 813.20(a), 813.38 (b) and (c), 813.119(e)(2), 813.160, the introductory text of paragraph (a), 820.1(d), 820.3(f), 860.7(g)(4), 860.123(b)(1), 861.32 (b) and (c)(5), 864.9050(a), 864.9160(a), 866.5240(a), 866.5890(a), 876.5830(a), 895.21(d)(1), 1002.7, 1002.10, text of the introductory paragraph, 1002.20(a), the introductory text of paragraph (b), and (b)(5), 1002.31(c), 1002.41(a)(1), 1002.50, the introductory text of paragraph (a) and (b), 1002.51, 1005.11, 1005.25 (b) and (c), 1010.2 (c) and (d), 1010.3 (a)(1) and (2)(i), (b), and (c), 1010.4, the introductory text of paragraph (a), (b)(1)(viii), and (c) (1) and (3), 1010.5, the introductory text of paragraph (a), (b), (c)(12), and (e) (1) and (2), 1010.13, 1020.30 (c), (d), and (d)(3)(ii), 1020.32(a)(1), 1030.10(c) (4)(iv), (5)(iv), and (6)(iii), the introductory text of (c)(6)(iv), and (c)(6)(iv)(*d*), 1040.30(c)(1)(ii), and 1050.10(d)(5).

Because these amendments are nonsubstantive, notice and public procedure and delayed effective date are unnecessary (5 U.S.C. 553 (b)(B) and (d)).

List of Subjects

21 CFR Part 800

Administrative practice and procedure, Medical devices, Packaging and containers, Reporting and recordkeeping requirements.

21 CFR Part 803

Medical devices, Reporting and recordkeeping requirements.

21 CFR Part 807

Confidential business information, Medical devices, Reporting and recordkeeping requirements.

21 CFR Part 808

Intergovernmental relations, Medical devices.

21 CFR Part 809

Labeling, Medical devices.

21 CFR Part 812

Health records, Medical devices, Medical research, Reporting and recordkeeping requirements.

21 CFR Part 813

Medical devices, Medical research, Reporting and recordkeeping requirements.

21 CFR Part 820

Medical devices, Reporting and recordkeeping requirements.

21 CFR Part 860

Administrative practice and procedure, Medical devices.

21 CFR Part 861

Administrative practice and procedure, Medical devices, Reporting and recordkeeping requirements.

21 CFR Part 864

Blood, Biologics, Laboratories, Medical devices, Packaging and containers.

21 CFR Part 866

Blood, Biologics, Laboratories, Medical devices.

21 CFR Part 876

Medical devices.

21 CFR Part 895

Administrative practice and procedure, Labeling, Medical devices.

21 CFR Part 1002

Electronic products, Radiation protection, Reporting and recordkeeping requirements.

21 CFR Part 1005

Administrative practice and procedure, Electronics products, Imports, Radiation protection, Surety bonds.

21 CFR Part 1010

Administrative practice and procedure, Electronic products, Exports, Radiation protection.

21 CFR Part 1020

Electronic products, Medical devices, Radiation protection, Television, X-Rays.

21 CFR Part 1030

Electronic products, Microwave ovens, Radiation protection.

21 CFR Part 1040

Electronic products, Lasers, Medical devices, Radiation protection.

21 CFR Part 1050

Electronic products, Sonic, Infrasonic, and Ultrasonic products, Medical devices, Radiation protection.

Therefore, under the Federal Food, Drug, and Cosmetic Act, the Radiation Control for Health and Safety Act of 1968, and under authority delegated to the Commissioner of Food and Drugs, Parts 800, 803, 807, 808, 809, 812, 813, 820, 860, 861, 864, 866, 876, 895, 1002, 1005, 1010, 1020, 1030, 1040, and 1050 are amended as follows:

PART 800—GENERAL

1. The authority citation for 21 CFR Part 800 is revised to read as follows and the authority citations following all the sections in Part 800 are removed:

Authority: Secs. 201(n), 304, 501, 502, 505, 506, 507, 515, 519, 521, 601, 602, 701 (21 U.S.C. 321(n), 334, 351, 352, 355, 356, 357, 360e, 360i, 360k, 361, 362, 371).

§ 800.12 [Amended]

2. Section 800.12 *Contact lens solutions and tablets; tamper-resistant packaging* is amended by removing paragraph (c) the second time it appears.

PART 803—MEDICAL DEVICE REPORTING

3. The authority citation for 21 CFR Part 803 continues to read as follows:

Authority: Secs. 502(t), 510, 519, 701(a), 704 (a) and (e), 52 Stat. 1055, 76 Stat. 792–795 as amended, 90 Stat. 564–565, 578, 581 (21 U.S.C. 352(t), 360, 360i, 371(a), 374 (a) and (e)).

§ 803.33 [Amended]

4. Section 803.33 *Where to submit a report* is amended in paragraph (b) by revising "Device Monitoring Branch" to read "Product Monitoring Branch".

PART 807—ESTABLISHMENT REGISTRATION AND DEVICE LISTING FOR MANUFACTURERS OF DEVICES

5. The authority citation for 21 CFR Part 807 continues to read as follows:

Authority: Secs. 301(p), 501, 502, 510, 513, 701(a), 52 Stat. 1049–1051 as amended, 1055, 76 Stat. 794–795 as amended, 86 Stat. 462 as amended, 90 Stat. 540–546 (21 U.S.C. 331(p), 351, 352, 360, 360c, 371(a)); 21 CFR 5.10.

§ 807.22 [Amended]

6. Section 807.22 *How and where to register establishments and list devices* is amended in paragraph (a) by revising "Bureau of Medical Devices (HFK–124)" to read "Center for Devices and Radiological Health (HFZ–342)".

§ 807.35 [Amended]

7. Section 807.35 *Notification of registrant* is amended in paragraph (b) by revising "Bureau of Biologics" and "Bureau of Drugs" to read "Center for Biologics Evaluation and Research" and "Center for Drug Evaluation and Research", respectively, everywhere they appear.

§ 807.37 [Amended]

8. Section 807.37 *Inspection of establishment registration and device listings* is amended in paragraphs (a) and (b)(2) by revising "Bureau of Medical Devices (HFK–124)" to read "Center for Devices and Radiological Health (HFZ–342)".

§ 807.90 [Amended]

9. Section 807.90 *Format of a premarket notification submission* is amended in paragraph (a) by revising "Bureau of Medical Devices (HFK–20)" to read "Center for Devices and Radiological Health (HFZ–401)".

§ 807.95 [Amended]

10. Section 807.95 *Confidentiality of information* is amended in paragraph (c)(1) by revising "§ 807.87(g)" to read "§ 807.87(h)".

PART 808—EXEMPTIONS FROM FEDERAL PREEMPTION OF STATE AND LOCAL MEDICAL DEVICE REQUIREMENTS

11. The authority citation for 21 CFR Part 808 continues to read as follows:

Authority: Secs. 521, 701, 52 Stat. 1055–1056 as amended, 90 Stat. 574 (21 U.S.C. 360k, 371); 21 CFR 5.10.

§ 808.87 [Amended]

12. Section 808.87 *Oregon* is amended in paragraph (a) by revising "§ 801.420(a)(b)" to read "§ 801.420(a)(6)".

PART 809—IN VITRO DIAGNOSTIC PRODUCTS FOR HUMAN USE

13. The authority citation for 21 CFR Part 809 continues to read as follows:

Authority: Sec. 701, 52 Stat. 1055–1056 as amended (21 U.S.C. 371).

§ 809.5 [Amended]

14. Section 809.5 *Exemption from batch certification requirements for in vitro antibiotic susceptibility devices subject to section 507 of the act* is amended in paragraphs (a) (1), (2), (3), and (4) and (b) by removing "Form 5 or Form 6".

PART 812—INVESTIGATIONAL DEVICE EXEMPTIONS

15. The authority citation for 21 CFR Part 812 continues to read as follows:

Authority: Secs. 301, 501, 502, 520, 701(a), 702,704, 801, 52 Stat. 1042–1043 as amended, 1049–1051 as amended, 1055, 1056–1058 as amended, 67 Stat. 476–477 as amended, 90 Stat. 565–574 (21 U.S.C. 331, 351, 352, 360j, 371(a), 372, 374, 381); 21 CFR 5.10.

§ 812.2 [Amended]

16. Section 812.2 *Applicability* is amended in paragraph (e) by revising "investigational new drug exemption" to read "investigational new drug application".

§ 812.19 [Amended]

17. Section 812.19 *Address for IDE correspondence* is amended by revising "Bureau of Medical Devices, Document Control Center (HFK–20)" to read "Center for Devices and Radiological Health, Document Mail Center (HFZ–401)".

§ 812.20 [Amended]

18. Section 812.20 *Application* is amended in paragraph (b)(9) by

removing "of this chapter" each time it appears and amended in paragraph (d) be revising "Bureau of Medical Devices" to read "Center for Devices and Radiological Health".

§ 812.38 [Amended]

19. Section 812.38 *Confidentiality of data and information* is amended in paragraph (d) by revising "§ 314.14" to read "§ 814.9" and removing the remainder of the sentence.

PART 813—INVESTIGATIONAL EXEMPTIONS FOR INTRAOCULAR LENSES

20. The authority citation for 21 CFR Part 813 continues to read as follows:

Authority: Secs. 301, 501, 502, 520, 701, 704, 801, 52 Stat. 1042–1043 as amended, 1049–1051 as amended, 1055, 90 Stat. 567, 569–571, 576–578 (21 U.S.C. 331, 351, 352, 360j, 371, 374, 381).

§ 813.20 [Amended]

21. Section 813.20 *Application* is amended in paragraph (a) by revising "Bureau of Medical Devices, Document Control Center (HFK–20)" to read "Center for Devices and Radiological Health Document Mail Center (HFZ–401)".

§ 813.38 [Amended]

22. Section 813.38 *Confidentiality of data and information in an application* is amended in paragraph (b) by revising "§ 314.14" to read "§ 814.9" and removing the remainder of the sentence, and in paragraph (c) by revising "§ 314.14" to read "§ 814.9".

§ 813.119 [Amended]

23. Section 813.119 *Disqualification of a clinical investigator* is amended in paragraph (e)(2) by revising "paragraph (c)(1) of this section" to read "paragraph (d)(1) of this section".

§ 813.160 [Amended]

24. Section 813.160 *Conditions of exemption* is amended in the introductory text of paragraph (a) by revising "§ 813.1(c)" to read "§ 813.1(b)".

PART 820—GOOD MANUFACTURING PRACTICE FOR MEDICAL DEVICES: GENERAL

25. The authority citation for 21 CFR Part 820 continues to read as follows:

Authority: Secs. 501, 502, 518, 519, 520(f), 701(a), 52 Stat. 1049–1051 as amended, 1055, 90 Stat. 562–569 (21 U.S.C. 351, 352, 360h, 360i, 360j(f), 371(a)).

§ 820.1 [Amended]

26. Section 820.1 *Scope* is amended in paragraph (d) by revising "Bureau of Medical Devices, Division of Compliance Programs, Industry Programs Branch (HFK–132)" to read "Center for Devices and Radiological Health, Division of Compliance Programs, Manufacturing Quality Assurance Branch (HFZ–332)".

§ 820.3 [Amended]

27. Section 820.3 *Definitions* is amended in paragraph (f) by revising "Bureau of Medical Devices" to read "Center for Devices and Radiological Health".

PART 860—MEDICAL DEVICE CLASSIFICATION PROCEDURES

28. The authority citation for 21 CFR Part 860 continues to read as follows:

Authority: Secs. 513, 514, 515, 519, 520, and 701(a), 52 Stat. 1055, 90 Stat. 540–559, 564–574 (21 U.S.C. 360c, 360d, 360e, 360i, 360j, and 371(a)).

§ 860.7 [Amended]

29. Section 860.7 *Determination of safety and effectiveness* is amended in paragraph (g)(4) by revising "Bureau of Medical Devices" to read "Center for Devices and Radiological Health".

§ 860.123 [Amended]

30. Section 860.123 *Reclassification petition: Content and form* is amended in paragraph (b)(1) by revising "Bureau of Medical Devices, Document Control Center (HFK–20)" to read "Center for Devices and Radiological Health, Document Mail Center (HFZ–401)".

PART 861—PROCEDURES FOR PERFORMANCE STANDARDS DEVELOPMENT

31. The authority citation for 21 CFR Part 861 continues to read as follows:

Authority: Secs. 501, 502, 513, 514, 701, 52 Stat. 1049–1051 as amended, 1055–1056 as amended, 90 Stat. 540–552 (21 U.S.C. 351, 352, 360, 360d, 371).

§ 861.32 [Amended]

32. Section 861.32 *Contribution by the Food and Drug Administration to the cost of developing a proposed standard* is amended in paragraph (b) by revising "41 CFR Parts 1–15 of the Federal procurement regulations" to read "48 CFR Parts 1 through 51 of the Federal Acquisition Regulations System" and in paragraph (c)(5) by revising "or 41 CFR Parts 1–15 of the Federal procurement regulations" to read "of 48 CFR Parts 1 through 51 of the Federal Acquisition Regulations System".

PART 864—HEMATOLOGY AND PATHOLOGY DEVICES

33. The authority citation for 21 CFR Part 864 continues to read as follows:

Authority: Secs. 501(f), 510, 513, 515, 520, 701(a), 52 Stat. 1055, 76 Stat. 794–795 as amended, 90 Stat. 540–546, 552–559, 565–574, 576–577 (21 U.S.C. 351(f), 360, 360c, 360e, 360j, 371(a)); 21 CFR 5.10.

§ 864.9050 [Amended]

34. Section 864.9050 *Blood bank supplies* is amended in paragraph (a) by revising "Bureau of Biologics" to read "Center for Biologics Evaluation and Research".

§ 864.9160 [Amended]

35. Section 864.9160 *Blood group substances of nonhuman origin for in vitro diagnostic use* in amended in paragraph (a) by revising "Bureau of Biologics" to read "Center for Biologics Evaluation and Research".

PART 866—IMMUNOLOGY AND MICROBIOLOGY DEVICES

36. The authority citation for 21 CFR Part 866 continues to read as follows:

Authority: Secs. 501(f) 510, 513, 515, 520, 701(a), 52 Stat. 1055, 76 Stat. 794–795 as amended, 90 Stat. 540–546, 552–559, 565–574, 576–577 (21 U.S.C. 351(f), 360, 360c, 360e, 360j, 371(a)); 21 CFR 5.10.

§ 866.5240 [Amended]

37. Section 866.5240 *Complement components immunological test system* is amended in paragraph (a) by revising "$C1_q$" to read "C_{1q}".

§ 866.5890 [Amended]

35. Section 866.5890 *Inter-alpha trypsin inhibitor immunological test system* is amended in paragraph (a) by revising the word "inter-alpha" in the second sentence to read "inter-*alpha*".

PART 876—GASTROENTEROLOGY-UROLOGY DEVICES

36. The authority citation for 21 CFR Part 876 continues to read as follows:

Authority: Secs. 501(f) 510, 513, 515, 520, 701(a), 52 Stat. 1055, 76 Stat. 794–795 as amended, 90 Stat. 540–546, 552–559, 565–574, 576–577 (21 U.S.C. 351(f), 360, 360c, 360e, 360j, 371(a)); 21 CFR 5.10.

§ 876.5830 [Amended]

34. Section 876.5830 *Hemodialyzer with disposable insert (kiil type)* is amended in paragraph (a) by revising "§ 897.5820" to read § 876.5820".

PART 895—BANNED DEVICES

41. The authority citation for 21 CFR Part 895 continues to read as follows:

Authority: Secs. 502(r) 516, 518, 519, 701(a), 52 Stat. 1055, 90 Stat. 560, 562–565, 577–578 (21 U.S.C. 352(r), 360f, 360h, 360i, 371).

§ 895.21 [Amended]

34. Section 895.21 *Procedures for banning a device* is amended in paragraph (d)(1) by revising "§ 875.30" to read "§ 895.30".

PART 1002—RECORDS AND REPORTS

36. The authority citation for 21 CFR Part 1002 continues to read as follows:

Authority: Sec. 360A, 82 Stat. 1182–84; 42 U.S.C. 263i, 263j.

§ 1002.7 [Amended]

44. Section 1002.7 *Submission of data and reports* is amended by revising "Bureau of Radiological Health" to read "Center for Devices and Radiological Health" everywhere it appears in this section.

§ 1002.10 [Amended]

45. Section 1002.10 *Initial reports* is amended in the text of the introductory paragraph by revising "Bureau of Radiological Health" to read "Center for Devices and Radiological Health".

§ 1002.20 [Amended]

46. Section 1002.20 *Reporting of accidental radiation occurrences* is amended in paragraph (a), the introductory text of paragraph (b), and paragraph (b)(5) by revising "Bureau of Radiological Health" to read "Center for Devices and Radiological Health".

§ 1002.31 [Amended]

47. Section 1002.31 *Preservation and inspection of records* is amended in paragraph (C) by revising "Bureau of Radiological Health" to read "Center for Devices and Radiological Health".

§ 1002.41 [Amended]

48. Section 1002.41 *Disposition of records obtained by dealers and distributors* is amended in paragraph (a)(1) by revising "Bureau of Radiological Health" to read "Center for Devices and Radiological Health".

§ 1002.50 [Amended]

49. Section 1002.50 *Special exemptions* is amended in the introductory text of paragraph (a) and in paragraph (b) by revising "Bureau of Radiological Health" to read "Center for Devices and Radiological Health".

§ 1002.51 [Amended]

50. Section 1002.51 *Exemptions for manufacturers of products intended for the U.S. Government* is amended by revising "Bureau of Radiological Health" to read "Center for Devices and Radiological Health".

PART 1005—IMPORTATION OF ELECTRONIC PRODUCTS

51. The authority citation for 21 CFR Part 1005 continues to read as follows:

Authority: Secs. 215, 356, 58 Stat. 690, 82 Stat. 1174; 42 U.S.C. 216, 263d.

§ 1005.11 [Amended]

52. Section 1005.11 *Payment for samples* is amended by revising "Bureau of Radiological Health" to read "Center for Devices and Radiological Health".

§ 1005.25 [Amended]

53. Section 1005.25 *Service of process on manufacturers* is amended in paragraphs (b) and (c) by revising "Bureau of Radiological Health" to read "Center for Devices and Radiological Health".

PART 1010—PERFORMANCE STANDARDS FOR ELECTRONIC PRODUCTS: GENERAL

54. The authority citation for 21 CFR Part 1010 continues to read as follows:

Authority: Sec. 358, 82 Stat. 1177; 42 U.S.C. 263f.

§ 1010.2 [Amended]

55. Section 1010.2 *Certification* is amended in paragraphs (c) and (d) by revising "Bureau of Radiological Health" to read "Center for Devices and Radiological Health".

§ 1010.3 [Amended]

56. Section 1010.3 *Identification* is amended in paragraphs (a)(1) and (2)(i), (b), and (c) by revising "Bureau of Radiological Health" to read "Center for Devices and Radiological Health".

§ 1010.4 [Amended]

57. Section 1010.4 *Variances* is amended in the introductory text of paragraph (a) and paragraphs (b)(1)(viii) and (c) (1) and (3) by revising "Bureau of Radiological Health" to read "Center for Devices and Radiological Health".

§ 1010.5 [Amended]

58. Section 1010.5 *Exemptions for products intended for United States Government use* is amended in the introductory text of paragraph (a) and in paragraphs (b), (c)(12), and (e) (1) and (2) by revising "Bureau of Radiological Health" to read "Center for Devices and Radiological Health".

§ 1010.13 [Amended]

59. Section 1010.13 *Special test procedures* is amended by revising "Bureau of Radiological Health" to read "Center for Devices and Radiological Health".

PART 1020—PERFORMANCE STANDARDS FOR IONIZING RADIATION EMITTING PRODUCTS

60. The authority citation for 21 CFR Part 1020 continues to read as follows:

Authority: Sec. 358, 82 Stat. 1177–1179; 42 U.S.C. 263f.

§ 1020.30 [Amended]

61. Section 1020.30 *Diagnostic x-ray systems and their major components* is amended in paragraph (c) by revising "Bureau of Radiological Health" and "Division of Compliance of that Bureau" to read "Center for Devices and Radiological Health" and "Office of Compliance of that Center", respectively, in paragraph (d) by revising "Bureau of Radiological Health" to read "Center for Devices and Radiological Health", and in paragraph (d)(3)(ii) by revising "Bureau of Radiological Health" to read "Center for Devices and Radiological Health".

§ 1020.32 [Amended]

62. Section 1020.32 *Fluoroscopic equipment* is amended in paragraph (a)(1) in the last sentence by revising "§ 1020.32(h)(1)(i)" to read "§ 1020.30(h)(1)(i)".

PART 1030—PERFORMANCE STANDARDS FOR MICROWAVE AND RADIO FREQUENCY EMITTING PRODUCTS

63. The authority citation for 21 CFR Part 1030 is revised to read as follows:

Authority: Sec. 358 (42 U.S.C. 263f); sec. 701(a) (21 U.S.C. 371(a)).

§ 1030.10 [Amended]

64. Section 1030.10 *Microwave ovens* is amended in paragraphs (c)(4)(iv), (5)(iv), and (6)(iii), the introductory text of paragraph (c)(6)(iv), and paragraph (c)(6)(iv)(*d*) by revising "Bureau of Radiological Health" to read "Center for Devices and Radiological Health".

PART 1040—PERFORMANCE STANDARDS FOR LIGHT-EMITTING PRODUCTS

65. The authority citation for 21 CFR Part 1040 continues to read as follows:

Authority: Secs. 358, 360A, 82 Stat. 1177–1179; 1182 (42 U.S.C. 263f, 263i); 21 CFR 5.10.

§ 1040.30 [Amended]

66. Section 1040.30 *High-intensity mercury vapor discharge lamps* is amended in paragraph (c)(1)(ii) by revising "Bureau of Radiological Health" to read "Center for Devices and Radiological Health".

PART 1050—PERFORMANCE STANDARDS FOR SONIC, INFRASONIC, AND ULTRASONIC RADIATION-EMITTING PRODUCTS

67. The authority citation for 21 CFR Part 1050 is revised to read as follows:

Authority: Sec. 358 (42 U.S.C. 263f).

§ 1050.10 [Amended]

68. Section 1050.10 *Ultrasonic therapy products* is amended in paragraph (d)(5) by revising "Bureau of Radiological Health" to read "Center for Devices and Radiological Health".

Dated: March 17, 1988.

John M. Taylor,

Associate Commissioner for Regulatory Affairs.

[FR Doc. 88-7526 Filed 4-5-88; 8:45 am]

BILLING CODE 4160-01-M

DEPARTMENT OF TRANSPORTATION

Federal Highway Administration

National Highway Traffic Safety Administration

23 CFR Parts 1204 and 1205

[NHTSA Docket No. 81-12; Notice 5]

Uniform Standards for State Highway Safety Programs; Determination of Effectiveness

AGENCY: National Highway Traffic Safety Administration (NHTSA) and Federal Highway Administration (FHWA), Department of Transportation (DOT).

ACTION: Final rule.

SUMMARY: On April 2, 1987, Congress enacted the Surface Transportation and Uniform Relocation Assistance Act of 1987. Section 206(d) of the Act, amending 23 U.S.C. 402(j), requires the Secretary to begin a rulemaking process to determine those programs most effective in reducing accidents, injuries, and deaths and to amend 23 CFR Part Part 1205 accordingly. Pursuant to the Act, the National Highway Traffic Safety Administration and the Federal Highway Administration published a joint Notice of Proposed Rulemaking (52 FR 33422) on September 3, 1987 and held three public hearings to solicit public comments. In this final rule, the agencies have determined that, in addition to the original six National Priority program areas, Motorcycle Safety is also among those programs that should be included as one of the "most effective" programs. It therefore will be eligible for Federal funding under expedited review procedures of the State and Community Highway Safety Grant Program (23 U.S.C. 402). This final rule amends the agencies' regulations accordingly, and also replaces the terms "standard" and "standards" with the words "guideline" and "guidelines" in Part 1204 of the agencies' joint regulation, 23 CFR Part 1204, pursuant to section 206(a) of the Act.

DATES: The amendments made by this final rule are effective on October 1, 1988.

FOR FURTHER INFORMATION CONTACT: In NHTSA: Mr. Robert M. Nicholson, Traffic Safety Programs, Room 5125, Naitonal Highway Traffic Safety Administration, 400 Seventh Street, SW., Washington, DC 20590, telephone (202) 366-1755; or Ms. Heidi L. Coleman, Office of Chief Counsel, National Highway Traffic Safety Administration, telephone (202) 366-1834.

In FHWA: Mr. Howard Hanna, Office of Highway Safety, Room 3407, Federal Highway Administration, 400 Seventh Street, SW., Washington, DC 20590, telephone (202) 366-2131; or Mr. Thomas Holian, Office of Chief Counsel, Federal Highway Administration, telephone (202) 366-1350.

SUPPLEMENTARY INFORMATION: On April 2, 1987, the Surface Transportation and Uniform Relocation Assistance Act of 1987, Pub L. 100-17, was enacted by Congress. Section 206(d) of the Act, amending 23 U.S.C. 402(j), requires the Secretary to begin a rulemaking process to determine those programs most effective in reducing accidents, injuries, and deaths and to amend 23 CFR Part 1205 accordingly. Pursuant to the Act, the National Highway Traffic Safety Administration (NHTSA) and the Federal Highway Administration (FHWA) published a joint Notice of Proposed Rulemaking (NPRM) (52 FR 33422) on September 3, 1987 and held three public hearings to solicit public comments. These hearings were held in 1987 on September 29 in Washington, DC, on October 8 in Fort Worth, TX, and on October 14 in Lakewood, CO. In this final rule, the agencies have determined that the original six National Priority program areas continue to be most effective in reducing accidents, injuries and fatalities, and that Motorcycle Safety is also among the most effective programs and should be added to the list of National Priority program areas. It therefore will be eligible for Federal funding under expedited review procedures of the State and Community Highway Safety Grant Program (23 U.S.C. 402). This final rule amends the agencies' regulation accordingly.

Section 206(d) provides that if the final rule is promulgated by April 1, 1988, the rule shall take effect October 1, 1988. If the rule is promulgated on a later date, it shall take effect October 1, 1989. Since this final rule was promulgated by April 1, 1988, the rule shall take effect October 1, 1988.

Section 206(a) of the Act, amending 23 U.S.C. 402, replaces the terms "standard" and "standards" wherever they appear with the words "guideline" and "guidelines." This final rule amends Part 1204 of the agencies' joint regulation, 23 CFR Part 1204, to incorporate this change.

Background

The State and Community Highway Safety Grant Program (the 402 program) was established under the Highway Safety Act of 1966, 23 U.S.C. 402. The Act required the establishment of Uniform Standards for State Highway Programs to assist the States and local communities in organizing their highway safety programs.

In 1981, Congress passed the Omnibus Budget Reconciliation Act of 1981, Pub. L. 97-35, revising the section 403 program. The Act directed the agencies to conduct a rulemaking process to determine those State and local highway safety programs most effective in reducing accidents, injuries and fatalities.

On April 1, 1982, in accordance with section 1107(d) of the Omnibus Budget Reconciliation Act of 1981, NHTSA and FHWA issued a final rule (47 FR 15116) identifying the six program areas which the agencies then considered to be the most effective NHTSA and FHWA highway safety programs. Those program areas were determined to be National Priority program areas, and include—

NHTSA Program Areas:
- Occupant Protection
- Alcohol Countermeasures
- Police Traffic Services
- Emergency Medical Services
- Traffic Records

FHWA Program Area:
- Safety Construction and Operational Improvements

The April 1982 final rule provided that these National Priority program areas continue to be eligible for Federal funding under the 402 program, and established a mechanism by which additional programs identified by a State may be eligible for Federal funding in that State.

The rule provided for an expedited procedure for the funding of National Priority program areas. See, 23 CFR

1205.4. For the funding of other program areas, the rule permits States to select one or both of two procedures: Formal decisionmaking or problem identification. See, 23 CFR 1205.5(a) and (b).

On January 5, 1987, the Department submitted to Congress a legislative proposal to revise 23 U.S.C. 402. The Department's proposal provided for a periodic review of the effectiveness of the various programs eligible for funding under section 404 in reducing accidents, injuries and fatalities. The Department believed the periodic review procedure to be the best method for ensuring the continued relevance of the section 402 program to changing circumstances and traffic safety needs, and for ensuring that federal funds continue to be used in as cost effective a manner as possible. The proposal scheduled the first review to begin on September 1, 1987.

The legislative proposal also provided that the terms "standard" and "standards" wherever they appear be replaced with the words "guideline" and "guidelines." The purpose of this amendment was to conform the language of section 402 to the current implementation of the programs, pursuant to the 1982 determinations of program effectiveness under section 402(j). As a result of the section 402(j) determinations, the highway safety program standards have been maintained as non-binding guidelines for use by the States in their section 402 programs.

The substance of the Department's proposal was enacted by Congress as subsection 206(a) and (d) of the Surface Transportation and Uniform Relocation Assistance Act of 1987.

On September 3, 1987, NHTSA and FHWA published a joint Notice of Proposed Rulemaking (NPRM) (52 FR 33422). The NPRM states that the agencies are considering "whether the six National Priority program areas identified in 1982 continue to be the most effective in reducing accidents, injuries and fatalities, and whether any emerging program areas should be added to the list of most effective programs." For example, the NPRM suggested that commenters address whether Motorcycle Safety, Pedestrian and Bicycle Safety, or other areas should be added to the list of National Priority program areas. The NPRM also proposed to amend Part 1204 of the agencies' joint regulations, to implement the statutory change replacing the terms "standard" and "standards" wherever they appear in section 402 with the words "guideline" and "guidelines." The agencies did not propose, in the NPRM, any changes to the section 402 funding procedures.

The agencies also held three public hearings to solicit public comments. These hearings were held in 1987 on September 29 in Washington, DC, on October 8 in Fort Worth, TX, and on October 14 in Lakewood, CO.

We received a substantial number of responses to the NPRM. We received nearly 300 written comments to the docket, and heard testimony from 80 participants at the three hearings. The commenters included either the Governor, the Governor's Highway Safety Representative, the State Highway Safety Coordinator, or a designee of these officials representing 41 States, the District of Columbia, Guam and Puerto Rico. In the remainder of this notice, comments from any of these officials will be referred to as the State's comments. We also received written and oral comments from national organizations. Some of these organizations represent the interests of a particular program area, such as the American Trauma Society, Mid-Atlantic EMS Council and the National Association of State Emergency Medical Services Directors representing EMS, the League of American Wheelmen representing bicyclists, the American Driver and Traffic Safety Education Association representing driver education, and the Motorcycle Safety Foundation and American Motorcycle Association representing motorcyclists. Others represented broader highway safety interests, such as the National Association of Governors' Highway Safety Representatives (NAGHSR), National Sheriffs' Association, Insitute of Transportation Engineers (ITE), American Automobile Association (AAA), International Association of Chiefs of Police (IACP), Insurance Institute for Highway Safety (IIHS), National Safety Council (NSC), American Red Cross, American Insurance Association, Texas A&M University System, Highway Users Federation for Safety and Mobility (HUFSAM), Northwestern University Traffic Institute, and Motor Vehicle Manufacturers Association (MVMA). In addition to these 41 States and national organizations, the commenters also included Senator John C. Danforth of Missouri, Congressman Vic Fazio of California, law enforcement agencies, educators, other State and local agencies, health and injury prevention centers, State and local groups and organizations, and interested individuals.

General Comments

(1) Specific Programmatic Comments

Many commenters describe projects and activities which have been funded under the section 402 program with success, or which they believe deserve to be funded in the future. Some respondents mention organizations which have been productive recipients of 402 grant funds, or which, given the opportunity in the future, could accomplish a great deal in the highway safety area with section 402 funds. Several comments are offered suggesting that a greater or smaller proportion of funds should be dedicated to certain National Priority program areas.

The agencies appreciate the many commenters who took the time to provide these thoughts, suggestions, and recommendations. They have been valuable and instructive on whether the agencies' messages are reaching the public and on new directions the public believes the agencies should take. Throughout this final rule, we will refer to these comments to illustrate points we wish to make or to provide examples of outstanding accomplishments or desired goals. However, due to the number of these comments and the fact that they address an area that is outside the scope of this proceeding, we do not address each one individually in this final rule. Specifically, decisions regarding the projects and activities to be supported with section 402 funds, the organizations to receive funding, and the percentage of funds that will be allocated to each program area (provided the State complies with statutory requirements, such as set asides), are all made by the States. We do not wish to limit the flexibility built into the funding process.

In response to these comments, the agencies would like to take this opportunity to briefly describe the section 402 funding process. The funding procedures for National Priority program areas were promulgated in the April 1982 final rule, and are codified in 23 CFR 1205.4. Subsection 1205.4(c) of that part provides that annually each State shall conduct an evaluation of its programs of the prior year, and shall describe the evaluation in its annual Highway Safety Plan (HSP). The specific requirements regarding preparation and submission of the Plan were published in the **Federal Register** on September 16, 1982 (and issued internally as joint NHTSA/FHWA order 960–2A/7510.3A dated June 10, 1983), and in a memorandum dated October 5, 1984.

Under the joint Order, the HSP must consist of three parts: Executive

Summary, Program Areas and Evaluation. The October 5, 1984 memorandum provides that "significant projects underway or completed" are to be reported in a separate document entitled the annual Noteworthy Project Reports.

For each National Priority program area, each State must include, in its HSP, a description of the highway safety problem, the countermeasures proposed or considered to decrease or stabilize the problem, and the kinds of data relied upon in making the problem and countermeasure identifications. It must also include a description of the criteria for project selection and, where applicable, the specific projects proposed to implement planned countermeasures, planned program accomplishments, and a brief description of how the evaluation for the program area will be conducted. Finally, each State must include a summary of programmed and obligated costs by program area. If the State's HSP conforms with statutory and other Federal requirements, it will be approved for Federal funding. After approval of the HSP, section 402 funds are then obligated to these States. The Governor of the State is responsible for the administration of the program through a State highway safety agency (the Governor's Highway Safety Representative, also referred to as the Governor's Representative).

Several commenters suggest new directions they believe the agencies should take to improve highway safety generally. Those comments which are outside the scope of this rulemaking action have not been addressed in this final rule.

(2) National Priority Program Area Concept

Several commenters offer objections to the National Priority program area concept. Four commenters suggest returning instead to the concept of emphasizing all 18 standards (or guidelines). The Governor's Representative of North Carolina, for example, states that although North Carolina believes "that the 'six pack' can meet the overall needs of the States in addressing their primary highway safety concern," it also believes "flexibility currently in the rules must be expanded to allow States to move out of the 'six pack' and address the remaining * * * standards." Other commenters emphasize the need for a "comprehensive systems approach," which some argue the "18 standards [or guidelines] concept" would provide. While it does not go as far as these other commenters, the National Safety Council (NSC) shares some of their concerns. NSC supports the six emphasis areas, and agrees that they "certainly encompass many of the major traffic safety countermeasure programs." However, it suggests that "they by themselves have fractionalized the total national traffic safety effort * * *. The NSC urges the agencies to address traffic safety needs in a comprehensive manner."

As stated previously, in 1981, Congress passed the Omnibus Budget Reconciliation Act of 1981, Pub. L. 97-35, which directed the agencies to conduct a rulemaking process to determine those State and local highway safety programs most effective in reducing accidents, injuries and fatalities. Pursuant to that mandate, NHTSA and FHWA identified six National Priority program areas which would continue to be eligible for Federal funding under the 402 program. These areas are eligible for funding under an expedited procedure (see, 23 CFR 1205.4), while nonemphasis areas can only be funded in a particular State under formal decisionmaking or problem identification procedures followed by that State (23 CFR 1205.5 (a) and (b)).

To ensure that Federal funds continue to be used in as cost effective a manner as possible, and respond to changes in circumstances and traffic safety needs, on April 2, 1987, Congress passed the Surface Transportation and Uniform Relocation Assistance Act of 1987. Section 206(d) of the Act requires the agencies to conduct again a rulemaking process to determine those programs most effective in reducing accidents, injuries and fatalities. Efforts to abandon the National Priority program area concept in favor of returning to the 18 standards (or guidelines) at this time would be in contravention of our Congressional mandate. In addition, the agencies strongly believe that the current approach has the greatest impact on highway safety. By emphasizing areas of national concern for which proven effective countermeasures are available, while permitting States to receive funding for additional areas of local concern under established funding procedures, the program is designed to ensure that section 402 resources are being allocated in the most effective manner.

The vast majority of commenters addressing this issue provide strong support for the National Priority program area concept, and the 402 program in general. Missouri's comments are representative, "It is the experience from Missouri's Highway Safety Program that the improvement in Highway Safety in our State [its death rate dropped from 6.2 to 2.4 fatalities per 100 million vehicle miles traveled] can be directly attributed to the '402' program and the six National Priority program areas identified in 1982."

The commenters highlight varied reasons for their support. Some emphasize that by identifying certain areas as National Priority program areas, the agencies enable the States to focus their attention on the programs that are most effective. According to New Jersey's Department of Transportation, for example, its efforts, as well as those of other States, "are for all practical purposes totally influenced by the listed priority program areas." Another commenter puts it, "Priority program areas are more than guidelines. In essence they are the highway safety program's shared mission, the platform for which we all rally." In this way, the comments reflect the importance of the agencies' leadership role in these most effective areas.

Other commenters indicate that the identification of priority areas, and the national emphasis placed on these areas, act as a catalyst at the State and local level. This, combined with the 402 funds provided, they say, attract State, local or private funding, volunteer and public support, and ultimately may lead to the self-sufficiency of programs. Several excellent examples were described in testimony. Mr. Ray Taber of Louisiana Child Passenger Safety, for example, explained that section 402 funds have attracted volunteers and in-kind grants from the private sector, which have helped his organization to develop a successful child safety seat loaner program with only one paid staff member and limited funds. Captain William Collins of the Hurst Police Department explained that as a result of STEP (Selective Traffic Enforcement Program) grant, fatalities dropped so dramatically that the city has indicated it intends to pick up the cost for the program's continuation. Hurst is a suburban community of approximately 40,000 people in Tarrant County, TX, located in the mid-cities area between Dallas and Fort Worth.

Other benefits cited in the comments which are attributed to the National Priority program area concept and the section 402 program in general, include the expansion of successful local programs in these areas statewide and the increased professionalism in the traffic safety field throughout the nation.

Finally, as will be discussed in greater detail below (under the heading Non-Emphasis Areas), the agencies as well as the vast majority of commenters addressing this issue, believe the

National Priority program area concept and the procedures established in 1982 to permit funding of non-emphasis areas, provide sufficient flexibility to the States for designing their highway safety programs. In fact, States which identify significant problems outside the priority areas, for which there are effective countermeasures available, are encouraged to allocate 402 dollars to address their local problems. For example, pedestrian safety projects, activities addressing elderly and youth problems, or certain commercial motor vehicle safety projects may be funded in this manner. In addition, the current format of the 402 program is not intended to prevent a comprehensive approach. Although each priority area is listed separately, the agencies strongly encourage those in the highway safety community to embrace the various areas of highway safety, and address them in projects which take a "holistic and integrated approach," as suggested by the Governor's Represenative of Missouri. This can be accomplished most effectively, the agencies believe, at the community level.

(3) Comprehensive Community Based Programs

A number of commenters, including States, national organizations (such as NSC, ITE and Northwestern University Traffic Institute), and project level organizations, express a need to foster comprehensive highway safety activities. A comprehensive approach, the commenters explain, is best achieved by adopting effective countermeasures which address more than one specific priority program area. The Governor's Representative for Missouri says the goal is to have "* * * integrated community and state Highway Safety Programs using all of the very effective priority areas."

In addition to recommending that multiple countermeasures be used in an integrated manner, commenters propose that community based programs should be designed based on local needs and problems. For example, the Tidewater Automobile Association of Virginia supports "community-based programs which provide an option for municipalities to deal with local problem areas," with implementation through "coalition groups formed to include representatives of government and the private sector so that they can work in a cohesive manner on such programs * * *"

The agencies believe comprehensive community based programming represents the natural maturation of the 402 program, growing from a focus on single countermeasures to a process of integrating countermeasures in appropriate program areas to respond, in a coordinated manner, to State and local highway safety needs and problems. We view the development and implementation of comprehensive community based highway safety programs as a process for responding to a range of highway safety problems identified in each locality.

A project conducted recently in Illinois will illustrate how this process has worked. The Fulton County Health Department designed an occupant protection project to increase safety belt usage through education activities. During this project, safety belt usage increased from 25 percent to 51 percent. Because local data showed that one-third of all traffic deaths were attributable to alcohol, this local project expanded its safety belt education program to include an alcohol component.

The agencies consider community involvement to be essential for the success of comprehensive community based programs. We believe the strength of these programs derives largely from the support and commitments provided by a broad base of public and private community leaders. These leaders can bring their individual positions, talents and resources to bear on local highway safety problems. Many commenters, discussing this and other issues, endorse the use of coalitions and advisory committees as effective tools for attracting leaders from diverse backgrounds and for facilitating the integration of varied concerns regarding multiple highway safety issues. This type of cooperative effort can result in the development and execution of a focused and coordinated approach. We encourage communities to work with their State Governor's Representative for Highway Safety, who can assist in assessing local highway safety problems and can recommend countermeasures and programs to effectively address their problems.

The Governor's Representative for New Jersey recommends that we create a new priority area for "coordinated or integrated highway safety programs at the local level." The State Highway Safety Coordinator for North Dakota supports increased emphasis for comprehensive community programs, but to a lesser degree than is afforded to priority programs. The agencies strongly encourage the use of comprehensive community based programs, but we do not believe it is necessary to establish a new priority program area for these activities. We believe the current procedures provide sufficient flexibility to allow the creation of these programs within the existing framework. The State of Texas, for example, notes in its comments that it has included an "integrated community program" module in its FY88 Highway Safety Plan. The agencies encourage the States to develop such programs, and include them in future HSP's. In the event that a community program includes a non-emphasis area component, justification must be submitted in accordance with funding procedures, which are described below in the discussion entitled Non-Emphasis Areas. The agencies' regional and field staff will, as always, be available to provide the States with assistance.

National Priority Program Areas

The agencies have determined that the six program areas identified in the April 1982 final rule continue to be of national concern, that effective countermeasures have been developed in these areas which address these concerns, and that State programs in these areas appear to be the most effective in reducing accidents, injuries and fatalities. The commenters were unified in their support of these areas' continuation. Alaska's comments are representative:

> Each program area represents an essential cornerstone that provides the foundation of a comprehensive statewide highway safety program. But, like the foundation of a building, the omission of any one of these cornerstones will weaken the entire structure.

We have also determined that Motorcycle Safety has emerged as a program area of national concern, and that several countermeasures exist in this area which have proven to be effective. We believe that this program area should be included among those that are considered "most effective" in reducing accidents, injuries and fatalities. Accordingly, we have decided to add Motorcycle Safety to the list of National Priority program areas.

As authorized by section 206(d) of the Surface Transportation and Uniform Relocation Assistance Act of 1987, the agencies may revise their determination from time to time under a rulemaking process. To ensure that Federal funds continue to be used in as cost effective a manner as possible and that we are responding to changing circumstances and traffic safety needs, we intend to periodically review our list of National Priority program areas.

NHTSA-Administered Program Areas

(1) Occupant Protection

The agencies received no comments suggesting that the area of Occupant Protection be deleted from the list of National Priorities. Commenters specifically addressing this area included States, law enforcement and other State and local agencies, special interest groups and individuals. All recommend that it be continued as a priority area and, in fact, some indicate that they consider it to have been the most effective program area in the designated group.

The agencies have decided that Occupant Protection should continue to be included in the list of National Priority program areas. Our decision is based on a finding that Occupant Protection continues to be an area of national concern, and that countermeasures exist in this area which have proven to be effective.

Strong gains have been made during the 1980's, including passage (or upgrading) of child safety seat usage laws in every State, passage of safety belt laws in a majority of States and significant increases in safety belt and child safety seat usage rates. According to the agency's 19 cities surveys, safety belt use for drivers has increased from 11.3% in December 1982 to 43.2% in September 1987, and child safety seat use has increased from 22.8% in December 1982 to 77.6% in June 1987. Despite these gains, it is clear that the commenters believe that occupant protection will continue to be a major highway safety concern in the future. NAGHSR states that it "and other organizations have joined together to campaign for a nationwide use rate of at least 70% by the year 1990, so there is still much to gain by continuing the program's emphasis in this area." In addition, some commenters emphasize also the continuing need to educate the public on the *proper* use of child safety seats, and the need to address the lower safety belt usage rates among certain age groups. The agencies believe that public information and education efforts in support of safety belt and child safety seat laws have proven to be effective in reducing injuries and fatalities.

The commenters suggest that the increases in usage throughout the country indicate that countermeasures have been effective in this area. In addition to the passage of occupant protection legislation, the countermeasures cited as being effective include the following: Comprehensive community occupant protection programs, which include increased enforcement efforts combined with public information and education activities, incentives, observational surveys of belt use, and evaluation; child safety seat loaner programs; targeted audience programs for elementary and secondary schools, employers, health professionals, or senior citizens, for example; enforcement efforts which are coupled with public information and education activities; police and judicial training; and other activities which focus primarily on public information and education, and may include use of mass media, the Seat Belt Convincer (a device designed to "convince" people to buckle up) and appearances by "Vince and Larry" (the crash dummy characters created and adopted to convey the agencies' safety belt message).

A few commenters, including NAGHSR and some States, recommend that activities be conducted to improve the public's awareness of the benefits of not only safety belts and child restraints, but also air bags and other forms of automatic crash protection, and rear seat lap and shoulder harnesses. The Motor Vehicle Manufacturers Association (MVMA) states, "This will be especially important as 'air bag' systems, which require belt usage to be most effective, come into greater usage. Air bag systems are designed to supplement, not replace belts." The agencies encourage the development and implementation of activities which are designed to accomplish these goals.

The commenters suggest that 402 funds can play a key educational role to convey the idea that the use of motorcycle and bicycle helmets is an important form of occupant protection. With the inclusion of Motorcycle Safety in the list of priority program areas, motorcycle helmet use projects may be eligible for funding under expedited funding procedures for that program area. Bicycle helmet use projects may be considered for funding under the procedures for non-emphasis areas.

(2) Alcohol and Other Drug Countermeasures (formerly Alcohol Countermeasures)

Comments regarding this program area were received from States, NAGHSR, law enforcement and other State and local agencies, universities and colleges, organizations concerned specifically with alcohol countermeasures (such as Mothers Against Drunk Driving, or MADD, and the Distilled Spirits Council of the United States), organizations concerned with broader highway safety issues (including IACP, AAA, American Red Cross, American Insurance Association, NSC and HUFSAM), and individuals. None of the comments suggest deleting alcohol countermeasures from the list of National Priorities. In fact, one commenter remarks, "alcohol-impeded drivers are our greatest hazard on the public highway."

The agencies have determined that Alcohol Countermeasures continues to be an area of national concern, and that countermeasures exist in this area which have proven to be effective. Accordingly, the agencies will continue to include it in the list of National Priority program areas.

A number of commenters report great strides in reducing alcohol-involvement in fatal motor vehicle crashes, through passage of alcohol-related laws (such as administrative per se laws requiring automatic license suspension and illegal per se laws establishing BAC 0.10 as the legal level for alcohol intoxication) and successful enforcement and education efforts. However, despite these achievements, the respondents agree that alcohol-involvement in fatal motor vehicle crashes continues to be a significant national concern, constituting 52% of all fatal crashes in 1986. IACP states, "While vehicle crashes attributable to alcohol have fallen in recent years, we foresee no circumstances under which this will cease to be a problem on the highways of America. The positive momentum which the nation has experienced in the alcohol countermeasures area should continue into the next decade." Commenters also voice their concern that progress in this area seems to have leveled off.

Numerous countermeasures which have proved to be effective are noted in the comments. They include projects which focus on prevention (through alcohol information and education activities), enforcement (from identification and apprehension, to prosecution and adjudication of an offender), and rehabilitation and treatment. Specific examples which commenters believe to be particularly effective include alcohol countermeasure projects which have a community-based focus (such as Project Graduation, Techniques for Effective Alcohol Management (TEAM) and similar programs), use of sobriety checkpoints and standardized field sobriety testing (including Horizontal Gaze Nystagmus), selective DWI enforcement, formalized training for law enforcement officials, prosecutors and judges, and improvement of DWI offender tracking systems. The commenters recommend that, for the best results, alcohol countermeasures programs should involve a broad

spectrum of persons at the community le el, including law enforcement officials, prosecutors and judges, health professionals (including EMS personnel), highway safety organizations (such as MADD and AAA) and other local community and business leaders.

The issue of the repeat drunk driving offender and the alcohol abuser is raised by a few commenters as a serious concern that deserves particular attention. Mr. Don Larson of Louisiana MADD, for example, expresses concern about this rapidly emerging problem. "Studies have proved that the first offenders are really not first offenders, and 70 to 80 percent of them are abusers and potential abusers." One commenter states that "DWI is without a doubt, the single greatest crisis intervention tool for alcohol and drug abusers" and goes on to say that the impacts of DWI efforts extend beyond traffic safety. Implementation of an alcohol countermeasure program in his community led to "an immediate reduction in crime, across the board * * * all violent crime statistics showed a downward trend." However, most believe the issue requires more attention. The agencies agree that the problem of repeat offenders and alcohol abusers is serious, and are working to develop countermeasures to combat this population. We encourage States and communities to seek innovative approaches to address this particular issue in their comprehensive alcohol countermeasures programs. Commenters also note and the agencies recognize the significant involvement of alcohol in pedestrian fatalities. We encourage States to include also in their comprehensive alcohol countermeasures programs, components addressing this problem.

In the NPRM, the agencies requested comments on whether the focus of the alcohol countermeasures program area should be changed in recognition of the growing interest in the problem of drugged driving. A significant number of respondents commented on this issue, all in favor of including drugs in the program area. The Los Angeles Police Department (LAPD) recommends inclusion of drugs due to "the fact that driving under the influence of drugs represents at least 10–15 percent of what we traditionally refer to as 'drunk driving'." The Division of Substance Abuse Services in New York estimates that "20–40 percent of traffic fatalities involve other drugs—usually in combination with alcohol."

Given these comments, the agencies find that drug use is perceived as an important emerging highway safety problem. We also find that effective countermeasures have been developed to address this problem. For example, with NHTSA and State grant support, the LAPD has developed an effective method for identification of drivers impaired by alcohol and/or drugs. In cooperation with NHTSA, the IACP, and the other law enforcement agencies, LAPD intends to make these drug recognition techniques and procedures available to the nation's law enforcement community under strict standards and training criteria. Currently, the training is being conducted with State and local police at four pilot sites: Denver, CO; Nassau County, NY; Phoenix, AZ; and Virginia Beach, VA. We expect that this training will be expanded to additional sites during FY 1989. The agencies support this effort.

The commenters recommend different names for this expanded program area, including "Alcohol and Drug Countermeasures," "Alcohol and Other Drug Countermeasures," and "Impaired Driving," to name a few. In order to recognize that the use of alcohol is, and should be, treated in many respects like use of other drugs, and yet maintain the current emphasis in this program area on alcohol, which continues to be considered the most serious drug use problem in highway safety, the agencies have decided to rename this area "Alcohol and Other Drug Countermeasures."

(3) Police Traffic Services

All commenters addressing this program area, including States, NAGHSR, law enforcement associations (such as the IACP and the National Sheriffs' Association), other special interest groups and national organizations, law enforcement and other State and local agencies, and individuals, support its continuation as a priority program. We received no comments recommending that it be deleted as a National Priority.

The agencies find that Police Traffic Services (PTS) should continue to be included in the list of National Priority program areas. Our finding is based on a conclusion that PTS continues to be an area of national concern, perhaps even more so now than in 1982, and that countermeasures exist in this area which have proven to be effective.

To illustrate the need for PTS, commenters (including NAGHSR and several States and law enforcement officials) cite what they perceive to be an increasing disregard for traffic laws. The area most often mentioned in this regard is speed. Many commenters raise this issue now that speed limits are being increased to 65 MPH on certain rural Interstate (and some other) highways. They believe these increases will result in more deaths and injuries from motor vehicle creahes. For example, the New York State Police asserts that, "there is a direct correlation between an increase in speed and an increase in the loss of lives." The commenters mention also the fact that traffic law violations continue to be the primary cause of motor vehicle crashes, and that additional demands on law enforcement agencies often prevent the States from dedicating sufficient manpower to traffic enforcement. The Montana Highway Patrol, for example, states that the 402 "program has allowed the Highway Patrol to increase enforcement efforts on Montana highways at a tme when the demand for other law enforcement services has increased and agency manpower and resources have actually been reduced."

The respondents generally agree that countermeasures in this area have proved to be effective. Examples include Selective Traffic Enforcement Programs (STEP), which make it possible to dedicate additional enforcement efforts in areas with high crash rates or high incidents of traffic violations, and Operation CARE (Combined Accident Reduction Effort), which is designed to increase police presence and thereby reduce crashes during certain holiday periods when they are more likely to occur. These types of activities, it is suggested, especially when combined with public information efforts, effectively maintain a high level of visibility for the enforcement of traffic laws.

Even commenters addressing areas other than Police Traffic Services emphasize the importance of enforcement and education efforts in traffic safety. These efforts are cited as significant elements in the areas of alcohol countermeasures, occupant protection, motorcycle safety, pedestrian and bicycle safety as well as speed enforcement, truck safety and licensing. The agencies note that many enforcement agencies which responded indicate that they are developing comprehensive programs which combine a number of these areas in their PTS activities. The agencies heartily endorse this comprehensive approach. In addition, NAGHSR points out, PTS is especially important now, in light of "the remarkable proliferation of and progress in highway safety legislation in recent years."

We received one comment recommending that the scope of this

program be changed. The commenter suggests that direct funding of PTS be discontinued, and that our support should be limited to the development of new and innovative enforcement strategies for adoption by existing police agencies. The commenter asserts that direct support of PTS "will in the long term be counterproductive." (By direct funding, we understand the commenter to mean that the activity has been chosen by the State to receive Federal assistance. As stated previously, decisions regarding the projects to be supported with section 402 funds and the organizations to receive funding are all made by the States.) Although reductions in violations and crashes can be documented on single segments of roadway as a result of PTS projects, the commenter argues that PTS can not be supported as a solution to statewide problems.

The agencies strongly disagree with this assertion. It is our belief that 402 support of Police Traffic Services has been and will continue to be an essential part of the section 402 program and that it does have positive lasting effects. In 1985, the Insurance Institute for Highway Safety conducted a project in Elmira, NY, and in Sepetember 1987, the Highway Safety Research Center, University of North Carolina issued a study, each of which addressed the relationship between enforcement efforts and safety belt usage. According to their findings, enforcement efforts when combined with a public information and education campaign, can lead to significant increases in safety belt usage. We believe similar gains can be achieved using these techniques in other areas, such as speed enforcement. Programs which are chosen by States for funding, such as STEP and Operation CARE, have resulted in significant short term safety improvements, and we are unaware of evidence revealing that these short term improvements lead to adverse effects at a later date. In addition, these projects increase awareness at the local level of the importance of highway safety issues and have often led to local funding so the programs can continue over a longer period of time, extending their positive impact. For example, New York City used 402 funds to concentrate enforcement resources on a serious pedestrian problem in the cite. The program produced very noticeable positive results and local funding continues for the program today. Further, some commenters city important contributions, which are much more difficult to measure. According to the Colorado Department of Public Safety, for example, the 402 program "has been very instrumental in raising the level of professionalism in traffic enforcement throughout the United States." Activities cited which contribute to professional growth or which institutionalize improvements in enforcement techniques and strategies, include: Training in areas such as traffic safety management, traffic investigation, and speed enforcement; instructor training in DWI detection; crash reconstruction programs; evaluations of current enforcement activities; and the development of system improvements. The agencies will therefore not limit the scope of PTS as suggested.

The Governor's Representative for Maryland recommends that the Police Traffic Services area be redesignated "Traffic Law Enforcement and Reporting" to "more clearly identify the true scope" of this program. The agencies believe the program area is broader than Maryland's proposal would suggest. Police Traffic Services does involve law enforcement and reporting, but it also includes vehicle crash investigation, problem identification and education components, to name a few. Accordingly, we will retain the current name for this area.

(4) Emergency Medical Services

With only one exception, all commenters addressing this issue, support continuation of Emergency Medical Services (EMS) as a National Priority area. Commenters include States, NAGHSR, national organizations, State agencies and local groups representing EMS interests (such as the American Trauma Society, Mid-Atlantic EMS Council, National Association of State Emergency Medical Services Directors, National Association of Emergency Medical Technicians, Emergency Medical Services Division of the Colorado and Texas Departments of Health, National Council of State EMS Coordinators, and Critical Illness Trauma Foundation of Boulder, MT) and organizations and agencies with broader highway safety interests.

The one exception was Mr. Joseph E. Meyerring, a Traffic Safety Education Specialist with the Minnesota Department of Education, who recommends discontinuation of the program, asserting "states should be required to submit plans to bring [EMS] systems up to a set of standards. * * * Upon completion of the plan the state would no longer receive funds." The thrust of Mr. Meyerring's comment is already addressed through the agencies' administration of the 402 program under the seed money concept. Under this concept, section 402 funds are awarded to accomplish tasks in accordance with highway safety goals. They do not pay for ongoing operating expenses for highway safety programs once these tasks are completed. However, to the extent that Mr. Meyerring meant literally that no EMS activities Statewide should be eligible for 402 funding once certain standards are attained, the agencies disagree with his recommendation. It runs contrary to the requirement imposed by Congress that the standards be changed to guidelines, and will therefore not be adopted. In addition, we find that such an approach would stifle the development of new technologies in the EMS area.

The agencies have determined that Emergency Medical Service (EMS) continues to be an area of national concern, and that countermeasures exist in this area which have proven to be effective. Accordingly, the agencies will continue to include it in the list of National Priority program areas.

The national concern which EMS addresses is summarized in testimony of Mr. William Metcalf, Director of Emergency Medical Services, Colorado Department of Health. He states, "Unfortunately, it's doubtful that we'll ever prevent all highway accidents from occurring and, thus, we must be prepared to manage those people who are injured as a result of highway accidents. If we accept the fact that we'll never successfully eliminate all highway accidents, then we must turn our attention to Emergency Medical Services as a method for reducing highway injuries and fatalities after the crashes have occurred. This is particularly true if we keep in mind the statistics reported by the American Trauma Society, which state that one out of every five fatalities due to injury, . . . is the result of a survivable injury, if that person had received the appropriate treatment."

In the NPRM, the agencies state their belief that comprehensive systems of trauma care and improved prehospital services are effective in reducing injuries and fatalities. The comments support this statement, and identify the elements that are necessary to optimize the outcome of highway and traffic related injuries, including the single number public access, coordinated dispatch, ambulance to hospital communications, trained first responders and prehospital personnel, adequate ground and appropriate air transportation, highly trained in-hospital personnel at specialized trauma care centers, prehospital and hospital

coordination, and injury or trauma registries.

The commenters also emphasize the effectiveness of this program area in fostering integrated programs at the local level. EMS personnel they indicate, have become increasingly involved in occupant protection, alcohol prevention, public education and traffic records programs in recent years. As already stated, the agencies believe that integrated and comprehensive activities such as these should be encouraged.

The particular countermeasures which are addressed in each comment depend largely on the sophistication of the EMS system which is available to the respondent. Commenters from States still needing basic prehospital services, for example, highlight the success of pilot projects or the needs in prehospital services; those from rural areas focus on the difficulties which are unique to these communities; and States and communities having the essential prehospital components emphasize the importance of trauma system development, trauma registries, and programming to refine the delivery of care to highway injured patients.

The IACP points out, "Statistics show that the difference between life and death in motor vehicle accidents is directly related to the sophistication of the available emergency services." The agencies therefore wish to provide sufficient flexibility in the EMS program area, to enable States at all levels of sophistication to improve their systems of trauma care.

The Governor's Representative for the State of Maryland recommends changing the name of Emergency Medical Services to "Pre-Hospital Emergency Medical Services" to "more clearly identify the true scope" of the program area. The agencies believe this would unnecessarily limit the focus of the program. At the other end of the spectrum, the National Association of State Emergency Medical Services Directors recommends that we recognize that "EMS represents a sophisticated system of care that begins even before a motor vehicle accident occurs and extends through rehabilitation, far beyond the emergency room doors." The agencies believe EMS should continue to emphasize the area of acute care, which covers pre-hospital and the initial stages of hospital care for highway-injured patients, as well as prevention and intervention activities.

(5) Traffic Records

Comments were received recommending continuation of Traffic Records as a priority program from a number of respondents, including States, NAGHSR, law enforcement and other State and local agencies, universities and colleges, and national organizations (including AAA, HUFSAM, ITE, and NSC).

As he did with regard to EMS, Mr. Meyerring of the Minnesota Department of Education recommends discontinuation of this program, asserting "states should be required to submit plans to bring [Traffic Records] systems up to a set of standards. * * * Upon completion of the plan the state would no longer receive funds." As stated previously, the thrust of Mr. Meyerring's comment is already addressed through the agencies' administration of the 402 program under the seed money concept. To the extent that Mr. Meyerring meant literally that no Traffic Records activities Statewide should be eligible for 402 funding once certain standards are attained, the agencies disagree with his recommendation. It runs contrary to the requirement imposed by Congress that the standards be changed to guidelines, and will therefore not be adopted. In addition, we find that such an approach would stifle the implementation of new technologies in the Traffic Records area.

In addition, two States recommend that the area be deleted. However, in making these recommendations, both seem to assume that the traffic records functions would be integrated into other program areas. Neither suggests discontinuing funding for the types of activities which have been supported under the Traffic Records program.

The Maryland Governor's Representative states, "the Traffic Records program area as such can be eliminated without any adverse effect on federally funded state traffic records improvements." However, he also asserts, "any amendments to the program areas [should] be of a broadening nature, and not more restrictive * * * [since] states must have maximum flexibility." Most of the comments suggest, and the agencies believe, that since this program area is of such importance, and since it involves unique and specialized countermeasures, it requires separate designation as a National Priority program.

The Montana Governor's Representative, at the Lakewood, Colorado hearing, proposed deletion of the Traffic Records program and, in its place, a new priority area called "Program Administration and Management." He recognizes that "[the area of traffic records] probably is the real foundation of the whole program," but he asserts that these functions "can be provided by a good sound staff in administering a program." Montana also recommends that the agencies remove the 10 percent cap for planning and administration costs, which was established in the 1982 final rule. Since these issues were not raised in the NPRM, the agencies did not receive many comments addressing them. Two States present at the Colorado hearing commented on Montana's recommendation to establish Program Administration and Management as a new priority area, and both indicated that they do not believe this is necessary. The Governor's Representative from Oregon agreed with Montana that the 10 percent cap on planning and administrative costs should be removed.

The agencies have decided not to add Program Administration and Management to the list of priority programs, nor to remove the 10 percent cap for these costs. Our decision is based on the same concerns we cited in our 1982 joint final rule. We want to ensure that sufficient funds are put into safety programs rather than be absorbed by administrative overhead.

In addition, we find that Traffic Records should continue to be included on the list of National Priority program areas. Our finding is based on a conclusion that Traffic Records continues to be an area of national concern, and that measures exist in this area which have proven to be effective in addressing highway safety problems.

It is clear from the comments that this program area is considered to be of national concern. Arkansas' submission is representative. It states, "the Traffic Records area is the lynch pin of the national highway safety program * * * [and] should remain an emphasis area." Many comments emphasize the fact that traffic records are essential for the States to perform meaningful problem identification, evaluation, countermeasure development, planning and program management, and to make informed decisions. The Louisiana Governor's Representative states, "I think it's the basis of most of everything that we do." In addition, the commenters indicate that all other priority program areas depend on traffic records for support. As stated by NSC, "Traffic records is the unseen partner * * *" to the other priority areas. Whether it is to track problem drivers, identify portions of roadways where crash frequency is high or to type-cast pedestrian incidents, Traffic Records provide essential data.

The commenters are in agreement that measures have proved to be effective in this area. Texas, for example, indicates,

"Advances in computer technology and systems design have significantly enhanced the State's ability to access and analyze" data. Some States refer to their success with Comprehensive Computerized Safety Recordkeeping Systems, which is designed to link together State data components and integrate subfiles. However, as technology improves and traffic safety issues change (thereby requiring that new data elements be added to State data bases) the commenters stress the continuing need for support in this area. For example, there appears to be a need to improve traffic record systems (perhaps by adding new data elements) to help identify the particular causes of pedestrian fatalities. The agencies encourage the use of funds in this area to make these improvements, because we believe they will provide great assistance in the development of appropriate local countermeasures which are effective in addressing this problem. The commenters also list other areas which continue to require attention in the area of Traffic Records, including the need to: Link computer systems and integrate data elements; establish uniform data elements; implement innovative driver licensing techniques to identify problem drivers and to ensure that sanctioned drivers do not receive licenses; and increase participation in rapid interstate information exchange systems (such as the National Driver Register) and compacts to assure proper licensing (such as the Driver License Compact).

In the NPRM, the agencies tentatively determined that section 402 funds apportioned to the States should not be used to fund classified truck and bus driver licensing activities conducted pursuant to the Commercial Motor Vehicle Safety Act of 1986 (CMVSA), which are covered by a separate FHWA grant program under that Act. Interested parties were asked, if they disagree with the agencies' initial determination, to indicate why section 402 funds are necessary to support actions taken under the CMVSA, and to identify specific actions that would be appropriate for funding under section 402.

Prior to the 402 hearings, the agencies received a number of requests for clarification with regard to this tentative determination. Therefore, at each of the hearings, a statement was made in our opening remarks to clarify what the agencies were seeking in the comments regarding the issue. We stated, "The agencies' tentative determination is based on our desire to see Section 402 funds used as seed money for programs which are most effective and which do not duplicate activities for which funding is otherwise available." We encouraged witnesses to provide specific examples of projects that would fit under either section 402 or CMVSA.

This issue is addressed by several commenters, almost all of which are national organizations (including the American Insurance Association, HUFSAM and NAGHSR) or States. The comments varied widely. A few States agree with the agencies' tentative determination, and testified that CMVSA activities should receive no section 402 funds beyond what has already been set aside out of section 402 monies. Others disagree with the initial determination, and cite examples of activities that section 402 should support. A few commenters go further, and recommend Truck Safety as a new priority area. Finally, NAGHSR and the State of Hawaii recommend that items which are covered by the FHWA grant program should be eligible for funding in the same way activities in non-emphasis areas are eligible.

The agencies have decided to adopt a combination of these recommendations. We recognize that there are certain activities which have traditionally been eligible for funding under the priority program areas, and also benefit commercial motor vehicle safety. These activities should continue to be eligible for funding. For example, selective enforcement programs that address commercial motor vehicle safety problems such as speeding, alcohol and drug impaired driving, safety inspections, and the enforcement of licensing and registration laws could be covered under Police Traffic Services. Improvements in a State's licensing, registration and records systems, that may include commercial motor vehicle actions, could fall under the Traffic Records priority program.

Truck safety activities that are outside the designated priority areas should not automatically be eligible for funding. The agencies have decided that these activities should be treated as non-emphasis areas, and approved for 402 funding only upon the submission of sufficient justification to the agencies' regional offices, in accordance with the existing funding procedures for non-emphasis programs. By adopting this decision, the agencies seek to avoid duplication and to ensure that the section 402 program does not become an alternative funding mechanism for implementing projects for which CMVSA grant funds are available. The agencies also believe that the highway safety expertise in each State is an important resource in carrying out the purpose of the CMVSA and we, therefore, actively encourage close coordination between Governor's Representatives for Highway Safety and others in the States who are involved in truck safety.

(6) Motorcycle Safety

The agencies received a substantial number of comments regarding Motorcycle Safety. Comments in support of adding Motorcycle Safety as a National Priority program area included submissions by Senator John C. Danforth, 17 States, NAGHSR, State and local law enforcement and other agencies, groups representing motorcycle interests (such as the Motorcycle Safety Foundation, the Motorcycle Rights Funds, the American Motorcycle Association, the Colorado Motorcycle Dealers Association and American Bikers Against Totalitarian Enactments, or ABATE), and national organizations representing broader highway safety interests (including AAA, the National Sheriffs' Association, IIHS and the American Insurance Association). One commenter states, "Having lain fallow for many years, motorcycle safety is certainly a fertile field for innovation. * * * we can scarcely expect [the States] to give high priority to a problem that is not considered a priority by the Federal Government."

The agencies have decided that Motorcyle Safety should be added to the list of National Priority program areas. Our decision is based on a finding that Motorcycle Safety is an area of national concern, and that countermeasures exist in this area which have proven to be effective.

The commenters agree that motorcycle crashes are a national problem, accounting for 4,500 deaths and 164,000 injuries each year. It is noted in the comments that motorcycles represent only about 3–4% of vehicle registrations, but 11% of all motor vehicle crash fatalities; that the death rate per vehicle mile travelled is 20 times, and the severe injury rate is 3 times, that for automobiles; that death or injury occurs in 8 of 10 motorcycle crashes compared to 2 in 10 automobile crashes; that 40–50% of motorcycle crashes involve alcohol use; and 40–50% of fatally involved motorcycle operators are unlicensed or improperly licensed. None of the respondents asserts that motorcycle safety is not a national problem.

Numerous countermeasures are cited by the commenters as having been proved to be effective, most notably safety helmet use, conspicuity enhancement, enforcement of operator licensing standards, rider education, motorist awareness programs, and programs for the responsible use of alcohol and other drugs. Several commenters voice concern, however, about single issue solutions to the motorcycle safety problem, specifically that some States seem to believe that if a helmet law is enacted no other motorcycle safety program is needed. These respondents stress the importance of integrated, comprehensive programming in motorcycle safety and in other traffic safety program areas, and the agencies fully agree with this comprehensive approach.

A NHTSA funded study in California conducted in the early 1980's found that there were 15–21% fewer motorcycle crashes when riders passed a rigorous licensing procedure. (Current data suggest that approximately 40% of riders involved in crashes do not have valid motorcycle operator licenses.) In the area of helmet use, effectiveness data consistently show that unhelmeted riders are three times as likely to sustain fatal head injuries as helmeted riders. Section 402 funded comprehensive motorcycle safety programs show a significant decrease in motorcycle crashes. For example, a York County, PA project showed an 85% reduction in motorcycle fatalities.

The Governor's Representatives for Hawaii and New Mexico state that, in their opinion, Motorcycle Safety should not be added as a priority program since their motorcycle education programs are self-funded. The agencies believe this issue is an important one, and have taken it into consideration. We agree with these States that, unlike other program areas, revenues can be and have been raised for motorcycle safety programs through registration, licensing, insurance or other fees relating to motorcycles. The commenters note that 29 States have passed legislation implementing State funded motorcycle safety programs, the majority of which are for rider education. The agencies strongly believe that additional States are capable of funding these programs themselves. We strongly encourage them to do so, and to determine the effectiveness of these programs. The Florida Bureau of Public Safety Management indicates in its comments that 402 funds have been "effective in focusing attention to the seriousness of the [motorcycle safety] problem in Florida," which has led to adoption of legislation dedicating funds to rider education. It is the agencies' strong desire that identifying motorcycle safety as a National Priority program area will provide the added momentum needed for many more States to obtain dedicated funds for not only rider education, but also for comprehensive motorcycle safety programs.

The agencies believe 402 funding can also benefit the States which already have dedicated motorcycle funds. Only a few States are generating enough funds to support comprehensive motorcycle safety programs, and small States with few motorcycle registrations are not generating enough funds to fully support even a rider education program. It is our belief that States currently funding rider education may be able to expand into more comprehensive programs. The agencies intend to track the States' progress in establishing self-sufficient motorcycle safety programs, and to evaluate the comprehensiveness and effectiveness of these programs.

It was suggested by several commenters at hearings that section 402 funds should be used to subsidize the cost of rider education programs. Since the purpose of the section 402 program is to provide seed money, rather than to pay ongoing operating expenses for highway safety programs, this generally would be an inappropriate use of these funds. An example of an activity in the rider education area that would be appropriate for section 402 funding might be a pilot program that introduces rider education and helps it to become self-sufficient. The States should not limit their activities, however, to rider education. Section 402 funds may be used, for example, for activities that would lead to substantial increases in helmet use, programs to improve motorcycle conspicuity and motorist awareness of motorcycles, countermeasures against alcohol and drug involvement in motorcycle crashes, and programs to develop and enforce operator licensing standards and testing.

Illinois suggests and the agencies agree that this area should cover not only motorcycles, but also motor scooters, motor bikes and other similar types of vehicles. The problems associated with these vehicles, and the countermeasures which would address these problems, are similar to those for motorcycles. Accordingly, we encourage States to include motor scooters, motor bikes and other similar types of vehicles in their comprehensive motorcycle safety programs.

FHWA-Administered Program Area

Roadway Safety (formerly Safety Construction and Operational Improvements)

Comments were received from States, NAGHSR, national organizations (such as HUFSAM, ITE, and AAA), State and local highway agencies and representatives from the private sector, recommending the continuation of the FHWA program area on the list of National Priority programs. No comments were received suggesting the area's exclusion from the list.

The Governor's Representative and the engineering program manager from the State of Louisiana recommend that the title of the FHWA Priority program area be changed from "Safety Construction and Operational Improvements" to "Roadway Safety." The words "construction" and "improvements," they assert, are confusing and misleading to many since the 402 program's authorizing law prohibits use of section 402 funds for the design, construction or maintenance of highway projects. The agencies have decided to rename the FHWA program area, "Roadway Safety." We believe this new title better reflects the scope of the program.

The agencies will include Roadway Safety on the list of National Priority program areas. This decision is based on our finding that Roadway Safety is an area of national concern, and that countermeasures exist in this area which have proven to be effective.

The commenters addressing this program area agree that it is of national importance. ITE's comments summarize some of the respondent's concerns:

> * * * with traffic volumes expected to increase by 45 percent by the year 2005, higher vehicle ownership, and travel speeds projected to increase significantly in the coming years, fatalities and injuries sustained in motor vehicle accidents will continue to constitute a major health problem in the United States. * * * These trends are taking place at the same time the nation is facing a shortage of well trained traffic operations and safety personnel needed to effectively carry out the highway safety improvement programs. * * * As a result, education and training programs made possible through the section 402 program will become even more imperative in the coming years.

Other factors cited by the commenters as being of continuing concern include: Increased resurfacing and reconstruction activities on aging highways where workers and traffic must coexist; a greater number of older drivers and pedestrians; and a more diverse mix of small cars and large trucks on existing roadways.

ITE points out that it is difficult to measure the effectiveness of activities under this program area, since they serve "as the building blocks" which enable "State and local agencies to implement the direct impact projects and programs—such as the highway safety construction programs [which can not be funded under the 402 program]." Section 402 funds can be used to identify a problem, select a countermeasure and evaluate the results of an improvement. However, any construction improvements made must be financed with other funds. In addition, several commenters assert that increased funds are needed to maintain a safe roadway environment. As is discussed below under the heading Amendments That Would Require Congressional Action, they suggest that additional resources be made available to the States under the FHWA portion of section 402.

However, the respondents identify a number of countermeasures which, they find, have proved to be effective, and have provided high payoffs with the funds available. Commenters representing State and local jurisdictions, in particular, emphasize the benefits derived through training, safety engineering and traffic operational assistance provided to local jurisdictions, which have no in-house traffic engineering expertise. The agencies have found, and commenters agree, that these activities have helped to spur technological advances, information sharing, and increased support for safety and operational improvements. As noted by NAGHSR and other respondents, these activities also often trigger community-wide traffic engineering efforts and interdisciplinary cooperation in and between jurisdictions combining engineering, enforcement and education at the local level. Other countermeasures reported by the commenters to be effective, and to provide a high payoff include safety studies, record systems improvements, and activities leading to low cost traffic engineering safety improvements, such as improved signing, markings and delineations, and lighting and intersection improvements.

The Governor's Representative for Oregon suggests that certain traffic records projects should be fundable with FHWA 402 monies. The agencies agree that certain traffic records activities relating specifically to the identification of roadway safety, operations and hazard problems may be appropriate for funding under Roadway Safety.

Non-Emphasis Areas

The agencies received comments recommending that additional program areas be added to our National Priority List. As will be explained in detail below, we have decided not to include these areas. Projects in these areas may of course be funded under either or both of the funding procedures that were established in the agencies' 1982 final rule (47 FR 15116), and codified in 23 CFR 1205.5. These procedures were explained in the preamble to that final rule.

> The Formal Decisionmaking Approach * * * is a method by which States could implement a formal decisionmaking process for highway safety plan development. The result of this decisionmaking process would be the identification by the State of those program areas that represent priorities within the State. * * * Once a State implements an approved process, the State would thereafter be able merely to list and describe in its Highway Safety Plan those projects identified through an exercise of such an approved process as the most effective in reducing accidents, injuries and fatalities in that State, certify that those projects were identified in accordance with that process, and supply the final decisionmaking results. (47 FR at 15118)
>
> The Problem Identification Approach * * * consists of using the existing procedures for problem identification and countermeasure development, including guidelines. [However,] * * * a greater degree of substantive review of proposed projects outside of [the National Priority program] areas is clearly necessary and appropriate. The advantage of this approach is that all of the States currently utilize this procedure and are familiar with the review process. (47 FR at 15119)

These funding mechanisms permit States to support, under section 402, new and innovative programs in any highway safety area and to address problems which are unique to a particular State, provided sufficient justification has been submitted. Since 1982, over $9 million in 402 funds have been obligated for projects under these mechanisms. States which identify significant problems outside the priority areas, for which there are effective countermeasures available, are encouraged to continue to use these procedures in order to address their unique regional problems. We note that at least one commenter views the process for funding non-emphasis areas as a difficult hurdle to surmount. It is not the agencies' intention to create an unnecessary or difficult barrier for the States to overcome. This process was created merely to provide an orderly method for assuring that major highway safety problems at the State and local level are being addressed with effective countermeasures. Any State that has difficulty in following the non-emphasis funding procedures should contact the agencies' regional and field staff, who stand ready to actively provide assistance.

In the NPRM, we stated that we were not proposing any changes to these funding procedures. A number of respondents commented on the need for flexibility in the 402 program, and some recommended increasing the program's flexibility by adding to the list of priority programs. The State of Alaska, due to the limited size of its highway safety staff, went so far as to suggest inclusion of program areas that are not presently a concern in the State. The Governor's Representative explained, if these areas were ever to become a problem, he did not believe he could afford to spend the time necessary to develop justification under the funding procedures. For this reason, he states, program areas simply are not funded in Alaska, unless they have been designated as National Priority programs. However, he did not suggest any amendments to the procedures. The vast majority of those addressing this issue consider the procedures established in 1982 to provide sufficient flexibility to address identified highway safety problem areas. Maryland comments that "this has sometimes required a rather liberal interpretation of the types of measures covered by particular priority areas." As stated by New Mexico, "There can be little doubt that the perceived needs and problem areas will differ from state to state as well as in different communities within a state." The State continues, "* * * flexibility exists in the existing program for this state to address its primary problem areas and to develop and obtain approval of projects in other areas of highway and traffic safety as the need arises." Accordingly, these procedures will remain unchanged.

(1) Pedestrian and Bicycle Safety

Commenters in support of adding pedestrian or bicycle safety or both to the list of National Priority program areas included Congressman Vic Fazio from the State of California, 16 States, NAGHSR, groups representing bicycle interests (most notably, the League of American Wheelmen (LAW)), national organizations representing broader highway safety interests (including the National Sheriff's Association, ITE, AAA, American Insurance Association, and the NSC), universities, health and injury centers, and individuals (who are either active bicycle riders or instructors certified by LAW). Others were opposed to its inclusion. Eighteen States, for example, recommended either that the

area of pedestrian and bicycle safety, in particular, should not be included as a priority program, or that the list of priority programs should not be expanded at all.

The agencies recognize that this program, particularly with regard to pedestrians, is an area of national concern. As we stated in the NPRM, nearly 8000 non-occupants (6771 pedestrians and 941 bicyclists) were killed in motor vehicle crashes in 1986, which represents 20% of all motor vehicle fatalities. In some urban areas, non-occupant fatalities represent 50% or more of all motor vehicle deaths. The commenters note the high numbers of injuries with regard to bicycles (bicycle crashes result in 1.5 million injuries each year, 500,000 of which require emergency room treatment), although the fatality rate is not nearly as high as for pedestrians. While this area is considered to be, to a large extent, an urban problem, we received data from commenters showing that, at least in some States, fatality rates for bicycles and pedestrians in rural regions equal or exceed these rates in urban areas. In Montana, for example, 95% of bicycle crashes occur in urban areas, but 50% of the fatalities occur in the rural regions. In Wisconsin, 85% of bicycle and 80% of pedestrian incidents occur in urban areas, but 60% and 50% respectively of these fatalities occur in rural regions.

The agencies have decided, however, not to include pedestrian and bicycle safety in our list of National Priority program areas at this time. Our decision is based on a finding that many of those countermeasures funded under the existing priority programs have been proven to be effective in reducing pedestrian and bicycle safety problems. (Examples of these countermeasures are discussed above under the headings, Alcohol and Other Drugs Countermeasures, Police Traffic Services and Traffic Records.) It is based also on a determination that currently, sufficient other proven countermeasures outside the priority programs named above, have not been demonstrated to exist in this area. The agencies are not at liberty to determine that the pedestrian and bicycle area should be added to the list of National Priority programs simply on the basis that the area involves a serious problem. The Federal statute directs the agencies to determine under section 402 which programs *are "most effective in reducing* accidents, injuries and deaths [emphasis added]." The agencies can and, in fact, plan to support efforts to address pedestrian and bicycle safety problems through other means (such as through funding under other 402 priority categories, by means of the non-priority 402 funding process, and under the section 403 program which, unlike 402, is designed to conduct highway safety research and development). However, the agencies do not believe that pedestrian and bicycle safety can be properly included on the list of National Priorities until the countermeasures in these areas have been demonstrated to be effective.

In the area of pedestrian safety, NHTSA studies in the 1970's showed that some programs could achieve measurable decreases in one category of incidents (so-called dart-out accidents involving children). However, other countermeasures that would constitute a comprehensive program have either not been rigorously tested or shown no reductions in incidents.

The agencies note that alcohol-related crashes (including events where the driver, pedestrian or both had consumed alcohol) constitute the largest single type of pedestrian safety problem. As to alcohol impairment of *drivers*, the agencies note there are many effective countermeasures, and that program area has been retained on the priority list (see previous discussion); those programs serve to promote safety for pedestrians as well as vehicle occupants. However, as to alcohol impairment of *pedestrians*, NHTSA is not aware (through its own work or other sources) of countermeasures that have been either developed or tested.

Accordingly, the agencies have decided not to add pedestrian safety at this time as a separate category on the National Priority program list. However, if a State has a pedestrian safety program which it believes will be effective in reducing crashes and injuries, the State can still make use of Section 402 funding, under one of the other priority categories (e.g., "dart-out" programs funded under police traffic services), or under the non-priority funding process to address special local needs.

A number of commenters suggest that, due to a lack of funds and emphasis, activities in this area have been suspended in many States and countermeasures now need to be developed. There are few if any materials, for example, which address the problems of alcohol involvement in pedestrian and bicycle fatalities or which target the elderly population, which is over-represented in pedestrian death rates. The agencies are aware of a number of local projects which appear to be effective in addressing the safety of young pedestrians. However, this population represents only about 10% of the overall number of pedestrian fatalities. Approximately 45 percent of pedestrian fatalities for age 15 and older involve alcohol, and a considerable number involve the elderly. Countermeasures addressing these problems need to be developed and tested before this area can be considered to be among the "most effective" programs. We strongly encourage the States to use the funding processes for non-emphasis areas to obtain approval for using 402 monies to introduce effective, innovative pedestrian safety countermeasures.

We note that some commenters cite countermeasures which they believe have been demonstrated to be effective in addressing bicycle safety. Although we do not believe the bicycle safety component of the program alone represents a problem which is national in scope, we strongly encourage States and communities with specific bicycle safety problems and effective countermeasures to address these problems, to use the current non-emphasis funding process to finance bicycle safety projects.

We note also that some proven roadway countermeasures exist which have been identified by FHWA. Pedestrian and bicycle problems, for which roadway countermeasures have been identified, may be covered under the FHWA National Priority program area, entitled Roadway Safety. Since it is mentioned in some comments, we wish to make sure the public is aware that 402 funds may not be used for design and construction purposes. Roadway construction countermeasures such as fixed illumination, urban intersection improvements and barriers, for example, can not be financed with section 402 funds. What may be financed with 402 funds under Roadway Safety, are projects to identify areawide pedestrian and bicycle-related problems and to select specific countermeasures to reduce these accidents. The actual design and construction of the countermeasures which are selected under 402 could then be funded using other Federal-aid, State or local assistance.

Texas suggests, "Before committing significant amounts of federal funds to pedestrian and bicycle safety, it is recommended that an in-depth analysis of the history of such programs be made to determine a limited sample of successful or potentially successful projects." The agencies agree that, at this time, new and innovative countermeasures need to be developed and proven to be effective. To assist in

the research and development of effective countermeasures, we will compile and distribute a compendium of projects that appear to be effective in addressing pedestrian and bicycle safety problems. NHTSA intends also to devote Highway Safety Research and Development funds, under section 403 of the Highway Safety Act of 1966, to identify effective countermeasures in the area of pedestrian safety. In addition, if a State is interested in conducting a demonstration project to determine the effectiveness of a particular countermeasure, NHTSA would consider providing section 403 funds for evaluation purposes. Further, the agencies strongly encourage the States to use the non-emphasis area funding mechanisms described above, to initiate and test pedestrian and bicycle safety projects, and to report their methodology and results to us. Our regional and field staff will be available to provide States with assistance.

(2) Driver Education

The inclusion of Driver Education as a priority program was recommended by two States, AAA, the American Association of Retired Persons, groups representing driver education interests (such as the American Driver and Traffic Safety Education Association and the Driver and Safety Educators' Association of New York State), educators, and individuals.

The agencies are not persuaded that driver education should be added to the list of National Priority program areas.

The commenters generally cite the number of accidents, injuries and fatalities nationally to establish that driver education addresses a national problem. One commenter mentions that the driver causes between 87 and 93 percent of all crashes. However, this figure includes causes such as alcohol and drug use, and traffic law violations which are addressed through the existing emphasis areas. More importantly, driver education has not been demonstrated to be a most effective countermeasure for addressing these problems. Many programs and countermeasures might have *some* impact on reducing accident, injury and fatality rates. However, the agencies are required by Congress in this rulemaking to emphasize as National Priority program areas only the *most* effective programs.

The data most often cited in support of the effectiveness of driver education, are the results of a study conducted in DeKalb County, GA. The primary objective of the DeKalb project was to determine the crash reduction potential of competency-based driver education training as compared to no formal training. To accomplish this, researchers evaluated the driving records of student volunteers who completed either the Pre-Driver License (PDL) curriculum (a 30 hour course) or the Safe Performance Curriculum (SPC) (an 80 hour course), or who were in the control group. Based on a follow-up evaluation, which was presented to the Research Division of the American Driver & Traffic Safety Education Association at its Annual Conference in August 1987 by a NHTSA Research Psychologist, commenters note that driver education students were involved in 6% fewer crashes and committed 10% fewer violations than untrained students. The agencies believe, however, that the results of the DeKalb study are mixed. Although it is true that students who completed the PDL curriculum were involved in 6% fewer crashes, only male PDL graduates committed fewer traffic violations. In addition, the study found that the SPC was effective in reducing convictions but not crashes for males, and neither crashes nor convictions for females.

While we are not persuaded to add Driver Education to the list of National Priority programs, we want to point out that States may apply for section 402 funding under the 1982 funding mechanisms for new and innovative projects relating to driver education. However, we would like to emphasize that the purpose underlying the 402 program is to provide seed money for new and innovative ideas, not to provide the operating expenses for ongoing programs.

(3) Elderly and Youth Programs

A number of commenters, including 10 States, raise concerns regarding the need to develop programs designed to educate young and elderly drivers. The University of North Carolina, Highway Safety Research Center, for example, suggests that young drivers be introduced into the driving population gradually, and that older drivers gradually exit therefrom. The commenters note, in particular, the overrepresentation of youth in fatalities and the trend toward a greater proportion of older drivers in our population. Louisiana estimates that by the year 2020, one fifth of our population will be 65 or older. However, only a few of the respondents suggest adding a new emphasis area to address these concerns. Most of the commenters seem to be satisfied that these issues can be addressed through the emphasis areas currently in place, and the 1982 funding procedures. While the agencies recognize that youth are overrepresented in fatalities and consider this issue to be of importance, we believe that programs which have been proven to be effective focus not only on the age of this population, but rather on the particular cause of the fatalities. For this reason, we believe that problems affecting the young can and, in fact, should be funded under the existing priority programs discussed elsewhere in this final rule.

In addition, the agencies did not receive in the comments, nor do we have at this time, sufficient evidence to indicate that the particular highway safety problems affecting elderly and young drivers are sufficiently unique that they stand alone as separate national concerns, or that there are countermeasures outside the existing priority emphasis areas which have been proved to be most effective in these areas in reducing accidents, injuries and fatalities.

We note that, with regard to elderly drivers, section 208 of the Surface Transportation and Uniform Relocation Assistance Act of 1987, requires the Secretary to "undertake to enter into appropriate arrangements with the National Academy of Sciences to conduct a comprehensive study and investigation of (1) problems which may inhibit the safety and mobility of older drivers using the Nation's roads, and (2) means of addressing these problems," and to develop a pilot program of highway safety improvements in conjunction with the study. In accordance with the requirements of the Act, results of this study and an evaluation of the pilot program, shall be reported to Congress. The results of these analyses, due in April 1989 and April 1990 respectively, should provide valuable additional information on the significance of the problem and appropriate countermeasures.

(4) Innovative Programs

The State of North Dakota suggests reserving a portion of 402 funds, such as 10%, for innovative projects. In testimony, Mr. Joe Carlson, for the State, recommends establishing a separate category for innovative activities, which would allow the State "to try some things that may not have been tried or that may be unique to our own situation." The agencies believe, and most of the comments indicate, that the procedures put in place in 1982 provide sufficent flexibility for States to try new things. We note that many of the States, including North Dakota, have conducted some very innovative activities, both within and outside the priority programs. Accordingly, we will not add

this to the list of National Priority program areas.

(5) Periodic Motor Vehicle Inspections

One commenter suggests adding periodic motor vehicle inspections to the list of National Priority program areas. The conference report on the continuing resolution for fiscal year 1988 (Pub. L. 100–202) directed that "NHTSA conduct a comprehensive evaluation of the effectiveness of state motor vehicle safety inspection programs * * *." In accordance with the conferees' instructions, NHTSA has submitted to the House and Senate Appropriations Committees and to appropriate authorizing committees, a study plan describing study methodology and specifying a detailed study timetable. The agencies believe it would be premature to include periodic motor vehicle inspections as a priority area in light of this pending evaluation of this area's effectiveness. States with particular problems in this area, for which proven effective countermeasures are available, are encouraged to use the non-emphasis funding processes to obtain approval for local funding.

(6) Others

We also received suggestions that the following additional program areas either be added to the list of priorities or at least should receive some national attention: School bus safety, Operation Lifesaver (a program which addresses highway-railroad grade crossing safety), winter driving and regional vehicles (such as snowmobiles, dune buggies and mud buggies). The agencies did not receive in the comments, nor do we have at this time, sufficient evidence to indicate that these particular problems require designation as separate 402 National Priority areas. This does not preclude, however, the funding of particular projects which use proven effective countermeasures to address problems identified in the States, through the non-emphasis area funding mechanisms. In addition, there may be funding sources outside of the section 402 program that can address some of these programs and activities.

Additional Issues Raised in Comments

(1) Change Standards to Guidelines

Section 206(a) of the Act amends section 402 by replacing the terms "standard" and "standards" wherever they appear with the words "guideline" and "guidelines." To implement this change, the agencies proposed, in the NPRM, to amend the body of 23 CFR Part 1204. We proposed to replace the terms "standard" and "standards" with the words "guideline" and "guidelines," and to replace the term "shall" with the word "should." We received no comments objecting to these proposed regulatory changes.

As stated in the NPRM, the agencies intend to review all the regulations that implement section 402, including Part 1204, and the supplemental materials that follow, to determine whether additional revisions need to be made. See, 23 CFR Chapter II. Any additional revisions will be accomplished in a separate rulemaking action.

(2) Periodic Update of the Guidelines

The Governor's Representative for New Jersey recommends that the agencies "update the guidelines periodically and make them available to the states as models and references which can be used in developing programs." Several other commenters echo this sentiment. The agencies believe they have an important role in technology transfer in all areas of highway safety. We therefore agree with this comment in principle. However, we are unable, at this time, to set a time schedule for updating each of these guidelines. As stated above, we intend to review all the regulations that implement section 402, including Part 1204, which will contain the highway safety program guidelines, to determine whether additional revisions need to be made. Any additional revisions will be accomplished in a separate rulemaking action.

(3) Change Accident to Crash

The State of New Mexico suggests that the agencies change their terminology, by referring to a collision of one or more vehicles as a "crash" rather than as an "accident." The State contends that the term "accident" suggests that only factors that are unintentional and unavoidable contribute to a collision, and we know this to be untrue.

The agencies completely agree with this comment, and, in fact, we have tried to use the term "crash" rather than "accident" in this rulemaking and in other agency documents and statements. However, as was pointed out at the Fort Worth hearing where this comment was raised, Congress instructed us to determine those programs which are most effective in reducing "accidents, injuries and fatalities." Accordingly, when referring to our statutory mandate, we have continued to use the term "accident." We encourage New Mexico, and other members of the traffic safety community to use the term "crash" instead of "accident" where appropriate, for the reason cited above.

(4) Amendments That Would Require Congressional Action

Several respondents, most of them States, object to the earmarking of section 402 funds. The State of Idaho, for example, argues, "the use of 'earmarked' funding categories reduces a state's ability to deal flexibly with its Highway Safety problems. When funds are designated for expenditure only in specific program areas, they cannot be used for other areas where a state's problem may require extra funds. If a state is unable to develop suitable projects to deal with problems in an earmarked area, the funds may accumulate. Pressure then builds to expend these earmarked funds, and low quality projects may be funded in preference to none at all."

New Mexico objects to earmarking of funds, and also the reduction of 402 monies. Mr. Howard Graff, on behalf of the State, testified that these actions "have created some administrative and management problems because it reduces our flexibility to develop and fund projects based on our perceived needs in our particular state." Other respondents also raise the issue of reduced section 402 funds, most often with regard to FHWA's portion of these monies.

The Traffic Improvement Association (TIA) of Oakland County suggests that non-governmental organizations, such as private non-profit groups, should be made eligible for direct funding under section 402. The Pennsylvania Association for Safety Education, Inc. recommends that the agencies consider certain factors (such as the State's per capita number of accidents, miles of roadway, mileage usage and safety belt laws) in their allocation of section 402 funds. One respondent suggests that the agencies' "role be substantially reduced and a highway safety block grant program be implemented."

While we share the commenters' objections to earmarking of 402 funds, the agencies are without authority to act on any of these proposals, unless Congress first amends the laws under which we operate. Congress establishes the agencies' funding limitations for the section 402 program, and has earmarked portions of these funds, notwithstanding the agencies' objections. See, for example, section 1(b) of Pub. L. 98–363, as amended by section 202(b) of Pub. L. 100–17, which earmarks 8 percent of

States' highway safety apportionments for developing and implementing comprehensive programs concerning the use of child restraint systems, and section 5 of Pub. L. 98-363 (codified, in 23 U.S.C. 402(k)) which established a 10 percent set aside for traffic records for two years. The agencies do not have authority to apportion section 402 funds in amounts that exceed Congressional limitations, or to disregard any restrictions or earmarkings placed on those funds by law.

With regard to TIA's comment, section 402 does not permit the agencies to distribute funds directly to parties other than the States. The Act requires that funds "shall be used to aid the States to conduct the highway safety programs approved" at the Federal level (section 402(c)). "* * * the Governor of the State shall be responsible for the administration of the program through a State highway safety agency" (section 402(b)(1)). The State highway safety agency and/or political subdivisions may be able to provide support to non-profit organizations and other highway safety professionals.

The factors which must be considered in allocating section 402 funds are described in the Act. Since 1969, the agencies have been required to apportion 402 funds "75 percent in the ratio which the population of each State bears to the total population of all the States, as shown by the latest available Federal census, and 25 percent in the ratio which the public road mileage in each State bears to the total public road mileage in all States." (section 402(c)).

Implementation of a block grant would also require legislation. The roles of the agencies are defined in 23 U.S.C. 402. See, for example, section 402(a), which provides that the agencies are responsible for approving State highway safety programs, designed to reduce traffic accidents and deaths, injuries and property damage resulting therefrom.

Impact Analyses

A. Federalism Assessment

The agencies have considered whether this action has any federaliam implications. We have determined that this final rule furthers the principles of federalism established by the Framers of the Constitution while striking an appropriate balance between increased State flexibility and an appropriate level of Federal involvement as required by the enabling legislation for this grant program. Highway safety does constitute a problem of national scope, and for this reason, Congress directed the agencies to determine those programs most effective in reducing highway accidents, injuries and fatalities. In this final rule, we increase the discretion of the States, by expanding the list of National Priority program areas, which are eligible for section 402 funding. In addition, programs that are not on this list, may also be supported under section 402 under established funding procedures. As discussed earlier in this final rule, we believe, as do the vast majority of commenters who discussed them, that these procedures provide the States with sufficient flexibility to develop their highway safety programs. As stated by New Mexico, "* * * flexibility exists in the existing program for this state to address its primary problem areas and to develop and obtain approval of projects in other areas of highway and traffic safety as the need arises."

B. Economic Impacts

The agencies have analyzed the effect of this action and determined that it is not "major" within the meaning of Executive Order 12291 or "significant" within the meaning of Department of Transportation regulatory policies and procedures. The rulemaking will not affect the level of funding available in the highway safety program, or otherwise have a significant economic impact, so that neither a Regulatory Impact Analysis nor a Regulatory Evaluation is required. Although not required to do so, the agencies prepared an Evaluation in 1982 to assist them in the rulemaking process. The Evaluation was reviewed by the agencies and an Addendum prepared in association with the NPRM which led to this final rule. These documents have been submitted to the Docket Section, Room 5109, and are available for inspection. Also in association with the 1982 rulemaking process, the agencies prepared and submitted to the public docket, Effectiveness and Efficiency Papers regarding the programs then being considered to be National Priority program areas. These documents are also available in the public docket, Room 5109, Docket Number 81-12, General Reference Section.

C. Impacts on Small Entities

In compliance with the Regulatory Flexibility Act, the agencies have evaluated the effects of this action on small entities. Based on the evaluation, we certify that this action will not have a significant economic impact on a substantial number of small entities. States will be recipients of any funds awarded under the regulation and, accordingly, the preparation of a Regulatory Flexibility Analysis is unnecessary.

D. Environmental Impacts

The agencies have also analyzed this action for the purpose of the National Environmental Policy Act. The agencies have determined that this action will not have any effect on the human environment.

E. Paperwork Reduction Act

The requirement relating to this proposal, that each State must submit a highway safety plan to receive section 402 grant funds, is considered to be an information collection requirement, as that term is defined by the Office of Management and Budget (OMB) in 5 CFR Part 1320. Accordingly, this proposed action has been submitted to and approved by OMB, pursuant to the requirements of the Paperwork Reduction Act (44 U.S.C. 3501, *et seq.*). These requirements have been approved through May 31, 1989; OMB No. 2127-0003.

List of Subjects in 23 CFR Parts 1204 and 1205

Grant programs, Highway Safety.

In accordance with the foregoing, Parts 1204 and 1205 of Title 23 of the Code of Federal Regulations are amended as set forth below.

PART 1204—[AMENDED]

1. The authority citation for Part 1204 continues to read as follows:

Authority: 23 U.S.C. 402; delegations of authority at 49 CFR 1.48 and 1.50.

2. The title of Subchapter B is revised to read as follows:

SUBCHAPTER B—GUIDELINES

3. The title of and text in 23 CFR Part 1204, which consists of § 1204.4 (excluding the supplemental materials that follow, which may be amended in a separate rulemaking action on a future date) is amended by removing the term "standard" and "standards" everywhere they appear and by adding in their place the word "guideline" and "guidelines", and by removing the term "shall" everywhere it appears and by adding in its place the word "should".

PART 1205—[AMENDED]

4. The authority citation for Part 1205 is amended to read as follows:

Authority: 23 U.S.C. 402; delegations of authority at 49 CFR 1.48 and 1.50.

5. In § 1205.3 paragraph (a)(1) is revised and paragraph (a)(6) is added to read as follows:

§ 1205.3 Identification of National Priority Program Areas.

(a) * * *

(1) Alcohol and Other Drug Countermeasures.

* * * * *

(6) Motorcycle Safety.

* * * * *

6. Section 1205.3(b) is amended by removing the phrase "Safety Construction and Operational Improvements" and by adding in its place the words "Roadway Safety".

Issued on April 1, 1988.

Diane K. Steed,

National Highway Traffic Safety Administrator.

Robert E. Farris,

Deputy Federal Highway Administrator.

[FR Doc. 88-7544 Filed 4-1-88; 4:43 pm]

BILLING CODE 4910-59-M

DEPARTMENT OF HOUSING AND URBAN DEVELOPMENT

Office of the Assistant Secretary for Housing-Federal Housing Commissioner

24 CFR Part 200

[Docket No. R-88-1387; FR-2290]

Lead Standards in Water Piping

AGENCY: Office of the Assistant Secretary for Housing-Federal Housing Commissioner, HUD.

ACTION: Final rule.

SUMMARY: This final rule amends HUD's Minimum Property Standards (MPS) for water supply systems to conform those standards to a recent statutory amendment. That amendment prohibits HUD mortgage insurance or assistance to newly constructed residential property that contains a potable water system, unless such system uses only lead-free pipes, solder, and flux.

EFFECTIVE DATE: June 19, 1988.

FOR FURTHER INFORMATION CONTACT: Mark W. Holman, Manufactured Housing and Construction Standards Division, Room 9152, Department of Housing and Urban Development, 451 Seventh Street, SW., Washington, DC 20410. Telephone (202) 755-6590. (This is not a toll-free number.)

SUPPLEMENTARY INFORMATION: Section 109(c)(1) of the Safe Drinking Water Act Amendments of 1986 (Pub. L. 99-339, effective June 19, 1988) (1986 Amendments) prohibits the Department from insuring a mortgage or furnishing assistance "with respect to newly constructed residential property which contains a potable water system unless such system uses only lead-free pipe, solder, and flux." Section 109(c)(2) states that "lead free"—

(A) when used with respect to solders and flux refers to solders and flux containing not more than 0.2 percent lead, and

(B) when used with respect to pipes and pipe fittings refers to pipes and pipe fittings containing not more than 8.0 percent lead.

This rule provides that no FHA mortgage insurance or assistance will be given to newly constructed residential property for which a building permit has been applied for on or after June 19, 1988 from the appropriate authority having jurisdiction, if the water supply systems of such property do not meet the lead-free standards set forth in § 200.926d(f)(1)(i).

HUD standards for water piping are now contained in 24 CFR Part 200, Subpart S—Minimum Property Standards. The MPS, in turn, reference standards found in nationally recognized model or acceptable State and local plumbing codes. These codes may not limit lead in water piping to the levels mandated by the 1986 Amendments. Accordingly, the statutory requirement concerning "lead-free" water supply systems is being incorporated into the HUD standards for water supply systems at § 200.926d(f)(1)(i)—the section governing one- and two-family dwellings.

In addition, the provision governing water supply systems in newly contructed multifamily structures is being amended to conform to the statute. 24 CFR 200.927 incorporates by reference in Handbook 4910.1 (*MPS for Housing* (1984 ed. with changes) the minimum property standards for multifamily and care-type housing. Paragraph 615-2.1 of that Handbook will be revised to read as follows:

615-2.1 *General.* Each living unit shall be provided with a continuing and sufficient supply of safe water under adequate pressure and of appropriate quality for all household uses. Newly constructed residential property for which a building permit has been applied for on or after June 19, 1988 from the competent authority with jurisdiction in this matter shall have "lead-free" water piping. For purposes of this Handbook, water piping is "lead-free" if it uses solders and flux containing not more than 0.2 percent lead, and pipes and pipe fittings containing not more than 8.0 percent lead. This system shall not impair the functioning or durability of the plumbing system or attachments.

As noted above, the effective date of the rule will be June 19, 1988, because the authorizing legislation, enacted on June 19, 1986, becomes effective 24 months after the date of its enactment. HUD believes that the deferred effective date of the statute was intended to enable program participants to change the design of water supply systems with as little disruption as possible. Therefore, although the MPS do not now prohibit the use of lead pipes, solder or flux, HUD believes that no change should be made to the MPS regarding lead-free piping before June 19, 1988.

Since this rule implements a statutory directive, the Secretary has determined that public comment is unnecessary and that this regulation should be published as a final rule.

Findings and Certifications

A Finding of No Significant Impact with respect to the environment has been made in accordance with HUD regulations at 24 CFR Part 50, which implement section 102(2)(C) of the National Environmental Policy Act of 1969. The Finding of No Significant Impact is available for public inspection during regular business hours in the Office of the Rules Docket Clerk, Office of the General Counsel, Department of Housing and Urban Development, Room 10276, 451 Seventh Street, SW., Washington, DC 20410.

This rule does not constitute a "major rule" as that term is defined in section 1(b) of the Executive Order on Federal Regulations issued by the President on February 17, 1981. Analysis of the rule indicates that it does not (1) have an annual effect on the economy of $100 million or more; (2) cause a major increase in costs or prices for consumers, individual industries, Federal, State, or local government agencies, or geographic regions; or (3) have a significant adverse effect on competition, employment, investment, productivity, innovation, or on the ability of United States-based enterprises to compete with foreign-based enterprises in domestic or export markets.

In accordance with 5 U.S.C. 605(b) (the Regulatory Flexibility Act), the undersigned hereby certifies that this rule does not have a significant economic impact on a substantial number of small entities. The rule provides for the applicability of Federal lead-free standards with respect to water supply systems. This provision does not impose any economic burden on small entities beyond that mandated by the new law.

This rule is listed as Item #976 in the Department's Semiannual Agenda of

Regulations published on October 26, 1987 (52 FR 40379) under Executive Order 12291 and the Regulatory Flexibility Act.

The Catalog of Federal Domestic Assistance program number is 14.117.

List of Subjects in 24 CFR Part 200

Administrative practice and procedure, Claims, Equal employment opportunity, Fair housing, Housing standards, Loan programs: housing and community development, Mortgage insurance, Organization and functions (Government agencies), Reporting and recordkeeping requirements, Minimum Property Standards, Incorporation by reference.

Accordingly, the Department amends 24 CFR Part 200 as follows:

PART 200—INTRODUCTION

1. The authority citation for Part 200 continues to read as follows:

Authority: Titles I and II of the National Housing Act (12 U.S.C. 1701 through 1715a–18); sec. 7(d), Department of Housing and Urban Development Act (42 U.S.C. 3535(d)).

2. Section 200.926d is amended by revising paragraph (f)(1)(i) to read as follows:

§ 200.926d Construction requirements.

* * * * *

(f) *Water supply systems*—(1) *General.* (i) Each living unit shall be provided with a continuing and sufficient supply of safe water under adequate pressure and of appropriate quality for all household uses. Newly constructed residential property for which a building permit has been applied for on or after June 19, 1988 from the competent authority with jurisdiction in this matter shall have lead-free water piping. For purposes of these standards, water piping is "lead free" if it uses solders and flux containing not more than 0.2 percent lead and pipes and pipe fittings containing not more than 8.0 percent lead. This system shall not impair the function or durability of the plumbing system or attachments.

* * * * *

Dated: March 24, 1988.

James E. Schoenberger,

General Deputy Assistant Secretary for Housing—Federal Housing Commissioner.

[FR Doc. 88–7447 Filed 4–5–88; 8:45 am]

BILLING CODE 4210-27-M

DEPARTMENT OF THE INTERIOR

Bureau of Indian Affairs

25 CFR Part 61

Preparation of Rolls of Indians

March 4, 1988.

AGENCY: Bureau of Indian Affairs, Interior.

ACTION: Final rule.

SUMMARY: The Bureau of Indian Affairs (BIA) is amending the regulations contained in 25 CFR Part 61 governing the preparation of rolls of Indians. The Cow Creek Band of Umpqua Tribe of Indians Distribution of Judgment Funds Act of 1987 directs the Secretary to determine the eligibility of two categories of Cow Creek Indian descendants who do not qualify for tribal membership, but who do meet certain other requirements specified in the Act. These nontribal members will be eligible to participate along with tribal members in certain tribal programs funded by a judgment awarded the Cow Creek Band of Umpqua Tribe of Indians in docket numbered 53–81L by the United States Claims Court. The BIA is amending Part 61 by adding paragraphs (f) and (g) to § 61.4 to include the qualifications for enrollment and the deadline for filing applications so that the procedures contained in Part 61 will govern the actions of the BIA in determining the eligibility of the two categories of Cow Creek Indian descendants.

EFFECTIVE DATE: April 6, 1988.

FOR FURTHER INFORMATION CONTACT: Superintendent, Siletz Agency, Bureau of Indian Affairs, P.O. Box 539, Siletz, Oregon 97380, telephone number: (503) 444–2679, (FTS 423–4111).

SUPPLEMENTARY INFORMATION: The authority to use these rules and regulations is vested in the Secretary of the Interior by 5 U.S.C. 301 and 25 U.S.C. 2 and 9. This final rule is published in exercise of rulemaking authority delegated by the Secretary of the Interior to the Assistant Secretary—Indian Affairs in the Departmental Manual at 209 DM 8.

The Cow Creek Band of Umpqua Tribe of Indians was awarded judgment funds in docket numbered 53–81L by the United States Claims Court. Funds to satisfy the award were appropriated by Congress. The Cow Creek Band of Umpqua Tribe of Indians Distribution of Judgment Funds Act of October 26, 1987, Pub. L. 100–139, authorized the use and the distribution of the judgment funds.

Section 5 of the Act of October 26, 1987, directs the Secretary to prepare within 365 days of the date of the Act a tribal membership roll of the the Cow Creek Band of Umpqua Tribe of Indians in accordance with the regulations contained in 25 CFR Part 61. The Act further directs that the tribal membership roll be published in the **Federal Register**. The rulemaking action amending Part 61 to provide for the preparation of the tribal membership roll is being published separately as a proposed rule at a later date in the **Federal Register**.

Section 6 of the Act of October 26, 1987, directs the Secretary to determine the eligibility of two additional categories of individuals who do not qualify for tribal membership, but who do meet certain other requirements specified in the Act. These nontribal members will be eligible to participate along with tribal members in certain tribal programs funded by the judgment award.

Section (6)(a)(1) of the Act of October 26, 1987, provides for the certification of eligibility by the Secretary of individuals to participate in two tribal programs, Higher Education and Vocational Training Program and the Housing Assistance Program. To be eligible individuals must, among other requirements, establish that they are descended from persons considered to be members of the Cow Creek Band of the Umpqua Tribe of Indians for purposes of the treaty entered into between such Band and the United States on September 19, 1853 (10 Stat. 1027). However, such individuals could not have shared or be descendants of persons who shared in the distribution of funds under the Act entitled "An Act to provide for the termination of Federal supervision over the property of the Klamath Tribe of Indian located in the State of Oregon and the individual members thereof, and for other purposes," approve August 13, 1954 (25 U.S.C. 564 *et seq.*), or under the Act entitled "An Act to provide for the termination of Federal supervision over the property of certain tribes and bands of Indians located in western Oregon and the individual members thereof, and for other purposes," approved August 13, 1954 (25 U.S.C. 691 *et seq.*).

To establish eligibility as a nontribal member for participation in the Higher Education and Vocational Training Program and the Housing Assistance Program, individuals must file or have filed on their behalf application forms with the Superintendent, Siletz Agency, Bureau of Indian Affairs, and with the Cow Creek Band of Umpqua Tribe of Indians. There is no deadline for filing applications for eligibility by this

category of nontribal members. To relieve individuals of any potential uncertainty as to how or where to file applications with the Tribe, the amendment provides for the Superintendent, upon receipt, to furnish a copy of the application form to the Tribe.

Section (6)(a)(2) of the Act of October 26, 1987, provides for the certification of eligibility by the Secretary of individuals to participate in the Elderly Assistance Program. In addition to meeting the same requirements as nontribal members applying for participation in the Higher Education and Vocational Training Program and the Housing Assistance Program, persons applying for participation in the Elderly Assistance Program must have been 50 years of age or older as of December 31, 1985, and, in accordance with the Act, must file or have filed on their behalf an application for participation within 180 days of the date of the Act, or by April 25, 1988. Application forms must be filed with the Superintendent, Siletz Agency, Bureau of Indian Affairs, and with the Cow Creek Band of Umpqua Indians. To relieve individuals of any potential uncertainty as to how or where to file applications with the Tribe, the amendment provides for the Superintendent, upon receipt, to furnish a copy of the application form to the Tribe.

In the interest of clarity the qualifications for eligibility for participation in the Higher Education and Vocational Training Program and the Housing Assistance Program and the qualifications for eligibility and the deadline for filing application forms for participation in the Elderly Assistance Program are being added as two separate paragraphs in the amendment to § 61.4. As a practical matter, however, it is not intended that persons who establish eligibility for participation in the Elderly Assistance Program will be required to file additional applications to establish eligibility for participation in the Higher Education and Vocational Training Program and the Housing Assistance Program. Furthermore, applications of individuals who file for the Elderly Assistance Program, but who do not qualify because they fail to meet the age requirement or because they failed to file by the deadline will be considered to determine whether the individual may qualify for participation in the Higher Education and Vocational Training Program and the Housing Assistance Program.

The primary author of this document is Kathleen L. Slover, Branch of Tribal Enrollment Services, Division of Tribal Government Services, Bureau of Indian Affairs, Room 1352, Main Interior Building, 1951 Constitution Avenue NW., Washington, DC 20245, telephone number: (202) 343-1702, (FTS 343-1702).

The Department of the Interior has determined that this rulemaking action amending Part 61 is a rule of agency procedure or practice. The regulations contained in Part 61 contain general enrollment procedures that can be made applicable to the preparation of a specific roll of Indians by amending the regulations to include the qualifications for enrollment and the deadline for filing applications. This rulemaking action is to provide the procedures that the BIA will follow in the processing of applications from individuals who meet or who believe they meet the eligibility requirements specified in the Act of October 26, 1987. Therefore, this rulemaking action amending Part 61 is exempted under 5 U.S.C. 553(b)(A) from advance notice and public procedure requirements. The Act of October 26, 1987, imposes a deadline for filing applications. A deferred effective date would shorten the period in which persons may file applications. Therefore, good cause exists to make this action effective immediately upon publication in the **Federal Register** as provided by 5 U.S.C. 553(d)(3).

The Office of Management and Budget has informed the Department of the Interior that the information collection requirements contained in this Part 61 need not be reviewed by them under the Paperwork Reduction Act (44 U.S.C. 3501 *et seq.*).

The Department of the Interior has determined that this is not a major rule under E. O. 12291 because only a limited number of individuals will be affected and those individuals who are determined eligible may be participating in the programs of one tribal entity funded by a relatively small judgment award granted the Cow Creek Band by the United States Claims Court.

The Department of the Interior has determined that this rule will not have a significant economic impact on a substantial number of small entities within the meaning of the Regulatory Flexibility Act (5 U.S.C. 601 *et seq.*) because of the limited applicability as stated above.

The Department of the Interior has determined that this rule is not a major Federal action significantly affecting the quality of the human environment and that neither an environmental assessment nor an environmental impact statement is required.

List of Subjects in 25 CFR Part 61

Indians—claims, Indians—enrollment.

Accordingly, Part 61 of Subchapter F of Chapter I of Title 25 of the Code of Federal Regulations is amended as shown:

PART 61—[AMENDED]

1. The authority citation for Part 61 is revised to read as follows:

Authority: 5 U.S.C. 301; 25 U.S.C. 2 and 9; Pub. L. 93-134, 87 Stat. 466, as amended (25 U.S.C. 1401 et seq.); Pub. L. 100-139.

2. Section 61.4 is amended by adding new paragraphs (f) and (g) to read as follows:

§ 61.4 Qualifications for enrollment and the deadline for filing application forms.

* * * * *

(f) *Cow Creek Band of Umpqua Tribe of Indians descendants.* (1) Pursuant to section 6(a)(1) of the Cow Creek Band of Umpqua Tribe of Indians Distribution of Judgment Funds Act of October 26, 1987, Pub. L. 100-139, a roll of nontribal members eligible to participate in the Higher Education and Vocational Training Program and the Housing Assistance Program of the Cow Creek Band of Umpqua Tribe of Indians is to be prepared of individuals:

(i) Who are descended from persons considered members of the Cow Creek Band of Umpqua Tribe of Indians for purposes of the treaty entered into between such band and the United States on September 19, 1853 (10 Stat. 1027), as ratified by the Senate on April 12, 1854; and

(ii) Who did not share or are not descendants of persons who shared in the distribution of funds under the Act entitled "An Act to provide for the termination of Federal supervision over the property of the Klamath Tribe of Indians located in the State of Oregon and the individuals members thereof, and for other purposes," approved August 13, 1954 (25 U.S.C. 564 *et seq.*), or under the Act entitled "An Act to provide for the termination of Federal supervision over the property of certain tribes and bands of Indians located in western Oregon and the individual members thereof, and for other purposes," approved August 13, 1954 (25 U.S.C. 691 *et seq.*).

(2) Application forms for enrollment must be filed with the Superintendent, Siletz Agency, Bureau of Indian Affairs, P. O. Box 539, Siletz, Oregon 97380. Upon receipt of an application form, the Superintendent shall furnish a copy to the Cow Creek Band of Umpqua Tribe of Indians.

(g) *Cow Creek Band of Umpqua Tribe of Indians descendants.* (1) Pursuant to section 6(a)(2) of the Cow Creek Band of Umpqua Tribe of Indians Distribution of Judgment Funds Act of October 26, 1987, Pub. L. 100-139, a roll of nontribal members eligible to participate in the Elderly Assistance Program of the Cow Creek Band of Umpqua Tribe of Indians is to be prepared of individuals:

(i) Who are descended from persons considered members of the Cow Creek Band of Umpqua Tribe of Indians for purposes of the treaty entered into between such Band and the United States on September 19, 1853 (10 Stat. 1027), as ratified by the Senate on April 12, 1854;

(ii) Who did not share or are not descendants of persons who shared in the distribution of funds under the Act entitled "An act to provide for the termination of Federal supervision over the property of the Klamath Tribe of Indians located in the State of Oregon and the individual members thereof, and for other purposes," approved August 13, 1954 (25 U.S.C. 564 *et seq.*), or under the Act entitled "An Act to provide for the termination of Federal supervision over the property of certain tribes and bands of Indians located in western Oregon and the individual members thereof, and for other purposes," approved August 13, 1954 (25 U.S.C. 691 *et seq.*); and

(iii) Who were 50 years or older as of December 31, 1985.

(2) Application forms for enrollment must be filed with the Superintendent, Siletz Agency, Bureau of Indian Affairs, P. O. Box 539, Siletz, Oregon 97380 by April 25, 1988, and with the Cow Creek Band of Umpqua Tribe of Indians. Application forms filed after that date will be rejected for failure to file on time regardless of whether the applicant otherwise meets the qualifications for eligibility for inclusion on the roll of persons eligible to participate in the Elderly Assistance Program, but will be considered for inclusion on the roll of persons eligible to participate in the Higher Education and Vocation Training Program and the Housing Assistance Program. Upon receipt of an application form, the Superintendent shall furnish a copy to the Cow Creek Band of Umpqua Tribe of Indians.

* * * * *

Ralph R. Reeser,

Acting Assistant Secretary, Indian Affairs.

[FR Doc. 88-7454 Filed 4-5-88; 8:45 am]

BILLING CODE 4310-02-M

ENVIRONMENTAL PROTECTION AGENCY

40 CFR Part 52

[FRL-3359-3; NC-007]

Approval and Promulgation of Implementation Plans; North Carolina; Revision to Volatile Organic Compound Rule

AGENCY: Environmental Protection Agency (EPA).

ACTION: Final rule.

SUMMARY: On January 24, 1983, North Carolina submitted to EPA for approval several revisions to its regulation for controlling miscellaneous volatile organic compound (VOC) emissions. EPA proposed to approve these rule changes in the **Federal Register** on December 21, 1983 (48 FR 56412), because the Agency did not feel the ambient air quality standard for ozone would be threatened by the revision. In response to the comments received during the public comment period, EPA obtained additional information for the State in order to fully document that assertion. After reviewing this information, EPA has concluded that although the rule change allows sources alternative VOC compliance options, those options will continue to provide for adequate control of VOCs and that efforts to attain and maintain the national ambient ozone standards will not be thwarted.

DATES: This action is effective May 6, 1988.

ADDRESSES: Copies of the material submitted by North Carolina may be examined during normal business hours at the following locations:

Public Information Reference Unit, Library Systems Branch, Environmental Protection Agency, 401 M Street SW., Washington DC 20460.

Environmental Protection Agency, Region IV, Air Programs Branch, 345 Courtland Street NE., Atlanta, Georgia 30365.

Division of Environmental Management, North Carolina Department of Natural Resources and Community Development, Archdale Building, 512 North Salisbury Street, Raleigh, North Carolina 27611.

FOR FURTHER INFORMATION CONTACT: Mr. Thomas Hansen of EPA Region IV's Air Programs Branch, at the above address and telephone (404) 347-2864 or FTS 257-2864.

SUPPLEMENTARY INFORMATION: The North Carolina State Implementation Plan (NCSIP) contains a regulation for controlling photochemically reactive volatile organic compound (VOC) emissions from sources which have no other applicable VOC control requirements. Regulation 2D.0518 applies to all VOC sources located in attainment or unclassified areas for which there is no New Source Performance Standard (NSPS) or National Emission Standard for Hazardous Air Pollutants (NESHAP). It also applies to such non-NSPS/NESHAP sources which are located in ozone nonattainment areas and which have the potential to emit less than 100 tons per year (TPY) VOC on a total plantwide basis, or to sources in nonattainment areas for which there is no RACT (reasonably available control technology) regulation under Section 2D.0900 of the North Carolina Administrative Code. The rule requires a plant which emits a total of more than 40 pounds per day of any photochemically reactive solvent, to reduce its VOC emissions by 85 percent (by weight).

It should be noted that for purposes of this provision, North Carolina has a different definition of VOC reactivity than EPA. See 42 FR 35314, 44 FR 32042, and 45 FR 48941. The EPA is approving this definition, however, since the overall regulation being approved is not required under EPA's regulations or policy, and therefore the regulation strengthens the SIP. It is possible that future regulatory stipulations may require sources covered by this provision to fall under EPA requirements; in this case, the definition of photochemically reactive solvents may have to be changed to conform to EPA's definition for exempt solvents.

On January 24, 1983, North Carolina submitted to EPA for approval several revisions to regulation 2D.0518. In summary, the changes allow sources subject to the 85% reduction requirement under paragraph (d) of 2D.0518 to comply with the rule by choosing one of two other methods. A source would be allowed to comply by meeting one of the RACT regulations in Section 2D.0900 or by installing control equipment that meets the requirements of BACT (best available control technology). A new paragraph (g) states that individual sources at a facility which install RACT or BACT would not be included in the determination of total plant compliance under paragraph (d).

EPA proposed to approve the revisions to 2D.0518 in the **Federal Register** on December 21, 1983 (see 48 FR 56412). In that notice, EPA stated that the Agency did not have precise figures on the impact of the rule change, but was proposing to approve it because

EPA believed no interference with the attainment or maintenance of the ambient air quality standards would occur. EPA received two comments during the public comment period, one of which challenged the adequacy of EPA's statement in the **Federal Register** that the ambient air quality standards would not be jeopardized. In response to this comment, EPA decided that a more precise quantification of the impact of the rule change was needed.

EPA contacted North Carolina and requested the State to assess how many sources could (or would) choose one of the compliance options contained in the revised 2D.0518, and what the potential effect on statewide VOC emissions would be. EPA was also concerned that a potential VOC emissions increase would take place and wanted to estimate the effect the revision would have on any ozone nonattainment areas in the State. After receiving the survey information from the State (submitted to EPA on March 25, 1987), EPA has determined that the potential impact of the rule change is negligible and that the National Ambient Air Quality Standard (NAAQS) for ozone will not be threatened in attainment or nonattainment areas. Therefore, EPA is taking final approval action on the changes to regulation 2D.0518 which were submitted on January 24, 1983, and which EPA proposed to approve on December 21, 1983.

For a more detailed description of the comments received during the public comment period, or for a detailed analysis of the potential effect of this regulation, please consult the technical support document which is available at the EPA Region IV address listed above.

Final Action:

EPA is today approving the revision to 15 NCAC 2D.0518, which was submitted by the State of North Carolina on January 24, 1983.

The Office of Management and Budget has exempted this rule from the requirements of section 3 of Executive Order 12291.

Under section 307(b)(1) of the Act, petitions for judicial review of this action must be filed in the United States Court of Appeals for the appropriate circuit by June 6, 1988. This action may not be challenged later in proceedings to enforce its requirements. (See section 307(b)(2)).

List of Subjects in 40 CFR Part 52

Air pollution control, Intergovernmental relations, Hydrocarbons, Ozone, Incorporation by reference.

Note: Incorporation by reference of the State Implementation Plan for the State of North Carolina was approved by the Director of the Federal Register on July 1, 1982.

Date: March 28, 1988.

Lee M. Thomas,

Administrator.

Part 52, Chapter I, Title 40 of the Code of Federal Regulations is amended as follows:

PART 52—[AMENDED]

1. The authority citation for Part 52 continues to read as follows:

Authority: 42 U.S.C. 7401–7642.

Subpart II—North Carolina

2. Section 52.1770 is amended by adding paragraph (c)(49) to read as follows:

§ 52.1770 Identification of plan.

* * * * *

(c) * * *

(49) Revision to 15 NCAC 2D.0518 which was submitted by the North Carolina Division of Environmental Management on January 24, 1983.

(i) Incorporation by reference.

(A) Letter of January 24, 1983 to EPA from the North Carolina Department of Natural Resources and Community Development, and amendments to North Carolina Administrative Code regulation 2D.0518 (Miscellaneous Volatile Organic Compound Emissions) adopted by the Environmental Management Commission on December 9, 1982, which allow alternative control strategies.

(ii) Additional material—none.

[FR Doc. 88-7168 Filed 4-5-88; 8:45 am]

BILLING CODE 6560-50-M

---

40 CFR Part 180

[PP 3F2934/R947; FRL-3360-9]

Pesticide Tolerance for 3-(3,5-Dichlorophenyl)-5-Ethenyl-5-Methyl-2,4-Oxazolidinedione

AGENCY: Environmental Protection Agency (EPA).

ACTION: Final rule.

SUMMARY: This rule establishes a tolerance for the combined residues of the fungicide 3-(3,5-dichlorophenyl)-5-ethenyl-5-methyl-2,4-oxazolidinedione (hereafter called "vinclozolin") and its metabolites containing the 3,5-dichloroaniline moiety in or on leaf lettuce and raspberries at 10.0 parts per million (ppm) and onions (dry bulb) at 1.0 ppm. This regulation to establish a maximum permissible level for residues of vinclozolin on these commodities was requested by BASF Wyandotte Corp.

EFFECTIVE DATE: Effective on April 6, 1988.

ADDRESS: Written objections, identified by the document control number [PP 3F2934/R947], may be submitted to the: Hearing Clerk (A-110), Environmental Protection Agency, Rm. 3708, 401 M St., SW., Washington, DC 20460.

FOR FURTHER INFORMATION CONTACT:

By mail: Lois A. Rossi, Product Manager (PM) 21, Registration Division (TS-767C), Environmental Protection Agency, 401 M St., SW., Washington, DC 20460.

Office location and telephone number: Rm. 227, CM #2, 1921 Jefferson Davis Highway, Arlington, VA 22202, (703)-557-1900.

SUPPLEMENTARY INFORMATION: EPA issued a notice, published in the **Federal Register** of September 28, 1983 (48 FR 44266), which announced that BASF Wyandotte Corp., Agricultural Chemicals Division, 110 Cherry Hill Rd., Parsippany, NJ 07054, had submitted pesticide petition 3F2934 to EPA proposing the establishment of a tolerance for the combined residues of the fungicide vinclozolin and its metabolites in or on leaf lettuce and raspberries at 10.0 ppm and onions (green and dry bulb) at 1.0 ppm. On January 22, 1988, BASF Wyandotte Corp. submitted an amendment to the petition withdrawing the request for a tolerance on green onions.

The data submitted in the petition and all other relevant material have been evaluated. The toxicological data considered in support of the proposed tolerance include the following:

1. A 90-day rat feeding study with a no-observed-effect level (NOEL) of 450 ppm (22.5 mg/kg/day), the highest dose tested.

2. A 90-day dog feeding study with a NOEL of 300 ppm (7.5 mg/kg/day).

3. A 6-month dog feeding study with a NOEL of 100 ppm (2.5 mg/kg/day).

4. A mouse teratology study with a NOEL for maternal toxicity of 6,000 ppm (900 mg/kg/day) highest dose tested, and a NOEL for developmental toxicity of 500 ppm (90 mg/kg/day).

5. A rabbit teratology study with a NOEL for maternal toxicity of > 300 mg/kg/day (9,900 ppm) and a NOEL for developmental toxicity of 80 mg/kg/day (2,640 ppm).

6. A chronic feeding/oncogenicity study in rats for 103 weeks, with a

NOEL of 486 ppm (24 mg/kg), and no compound-related oncogenic effects under the conditions of the study at doses up to 4,374 ppm (219 mg/kg bw/day), the highest dose tested.

7. A chronic feeding/oncogenicity study in mice for 26 months, with a NOEL of 486 ppm (73 mg/kg) and no compound-related oncogenic effects under the conditions of the study at doses up to 4,374 ppm (503 mg/kg bw/day), the highest dose tested.

8. A dominant lethal assay in mice negative at 2,000 mg/kg (only level tested).

9. Sister chromatid exchange study in bone marrow of the Chinese hamster was negative.

10. Reverse mutation test with and without a metabolic activation system (*Salmonella typhimurium* strains TA98, TA100, TA1535, TA1537, and TA1538, and *E. coli* WP2 hcv), which was negative for mutagenic effects.

11. A primary rat hepatocyte unscheduled DNA synthesis assay, which was negative, and a mouse lymphoma forward mutation assay, which showed weak positive mutagenic activity only at concentrations exceeding solubility of test material in the test medium.

Based on the NOEL of 100 ppm in the 6-month dog-feeding study, and using a hundred-fold uncertainty factor, the acceptable daily intake (ADI) for vinclozolin is calculated to be 0.025 mg/kg/day. The maximum permitted intake (MPI) for a 60/kg human is calculated to be 1.5 mg/day. The theoretical maximum residue contribution (TMRC) from the proposed tolerances is 0.000181 mg/kg/day and utilizes 0.72 percent of the ADI. The proposed tolerances and the established tolerances utilize a total of 55.48 percent of the ADI.

The nature of the residues is adequately understood, and an adequate analytical method, gas chromatography using an electron capture detector, is published in Vol. II of the Food and Drug Administration (FDA) Pesticide Analytical Manual for enforcement purposes. There is no reasponable expectation of residues in eggs, milk, meat, or poultry from the use on leaf lettuce, respberries, and onions (dry bulb).

Based on the data and information considered by the Agency, it is concluded that the pesticide is useful for the purpose for which the tolerance is sought, and it is concluded that the establishment of the tolerance will protect the public health.

Any person adversely affected by this regulation may, within 30 days after publication of this document in the **Federal Register**, file written objections with the Hearing Clerk, at the address given above. Such objections should specify the provisions of the regulation deemed objectionable and the grounds for the objections. If a hearing is requested, the objections must state the issues for the hearing and the grounds for the objections. A hearing will be granted if the objections are supported by grounds legally sufficient to justify the relief sought.

The Office of Management and Budget has exempted this rule from the requirements of section 3 of Executive Order 12291.

Pursuant to the requirements of the Regulatory Flexibility Act (Pub. L. 96-354, 94 Stat. 1164, 5 U.S.C. 601-612), the Administrator has determined that regulations establishing new tolerances or raising tolerance levels or establishing exemptions from tolerance requirements do not have a significant economic impact on a substantial number of small entities. A certification statement to this effect was published in the **Federal Register** of May 4, 1981 (46 FR 24950).

List of Subjects in 40 CFR Part 180

Administrative practice and procedure, Agricultural commodities, Pesticides and pests.

Dated: March 25, 1988.

Douglas D. Campt,

Director, Office of Pesticide Programs.

Therefore, 40 CFR Part 180 is amended as follows:

PART 180—[AMENDED]

1. The authority citation for Part 180 continues to read as follows:

Authority: 21 U.S.C. 346a.

2. Section 180.380(a) is amended by adding and alphabetically inserting the following commodities, to read as follows:

§ 180.380 3-(3,5-Dichlorophenyl)-5-ethenyl-5-methyl-2,4-oxazolidinedione; tolerances for residues.

(a) * * *

Commodities	Parts per million
* * * * *	
Lettuce (leaf)	10.0
Onions (dry bulb)	1.0
* * * * *	
Raspberries	10.0

[FR Doc. 88-7508 Filed 4-5-88; 8:45 am]

BILLING CODE 6560-50-M

FEDERAL EMERGENCY MANAGEMENT AGENCY

44 CFR Part 80, 82 and 83

Crime Insurance Program; Revision

AGENCY: Federal Emergency Management Agency (FEMA).

ACTION: Final rule.

SUMMARY: These revisions to the Federal Crime Insurance Program (FCIP) achieve the following: Increase the Federal Crime Insurance Program (FCIP) rates which apply to both residential and commercial properties located in eligible states; authorize a premium discount on commercial burglary and robbery insurance policies in the form of credits for installation of hold up buttons and alarms protecting safes; and for commercial policies covering robbery away from the premises when the insured has demonstrated that he has entered into a contract with a bonded armored car service for transporting cash from the insured premises to a bank.

EFFECTIVE DATE: This rule will be effective for Federal Crime Insurance business written after May 1, 1988, and renewal policies not already billed to existing policyholders.

FOR FURTHER INFORMATION CONTACT: Robert J. DeHenzel, Federal Emergency Management Agency, Federal Insurance Administration, Donohoe Building, 500 C Street SW., Room 433, Washington, DC 20472, Telephone number (202) 646-3440.

SUPPLEMENTARY INFORMATION: On January 11, 1988, FEMA published for comment in the **Federal Register** (Vol. 53, Page 621) a proposed rule containing revisions to the existing Federal Crime Insurance regulations.

These amendments to the Federal Crime Insurance Program Regulations are the result of the experience gained over the past 17 years the Program has been in operation and the Federal Insurance Administration's continued desire to improve service to policyholders and to more closely align the Program with the underwriting and rating methods used by the private insurance sector, while reducing the general taxpayers' burden with more equitable sharing of the cost of crime losses between the general taxpayers and the program insureds.

In order to achieve these goals, the Federal Insurance Administration began in 1981 a 5 year program to reduce the taxpayer subsidy by instituting changes such as rate increases, coverage changes, higher deductibles, and increasing the extent of protective

device requirements with which an insured would be required to comply as a condition of new or continued eligibility for crime insurance.

In spite of the above progam chnages, the Federal Crime Insurance Program is sustaining underwiting losses and program expenses that would require an approximate subsidy of 13 million dollars. In order to achieve a self-sustaining status, the Federal Insurance Administration would, therefore, need to impose an overall rate increase of approximately 145% to offset the higher-than-average industry expenses associated with administering the Program. While it is the Administration's goal, within the statutory limitations prescribed by the Congress, to make the Federal Crime Insurance Program self-sustaining, and recent studies performed by the actuarial firm of Tillinghast, Nelson & Warren, Inc., for the Federal Insurance Administration comparing FCIP and ISO rates indicate a substantial rate increase is appropriate, only a 5% increase is being proposed by the FIA for Fiscal Year 1988. This action is in keeping with Congressional statutes, limiting rate increases to 5% in 1988 and 1989. However, in order to continue the Federal Insurance Administration's successful efforts to help insureds protect themselves more effectively, the FIA is proposing additional economic incentives to businesses by providing premium credits for the installation of safe burglary alarm systems; holdup alarm systems; and contracts with a bonded armored car service for transporting cash receipts from the insured premises to a bank.

No written comments were received during the comment period.

FEMA has determined that an environmental impact statement is not needed for this final rule. A copy of the finding of no significant impact and an environmental assessment is available at the above address.

FEMA has also determined that this rule will not have a significant economic impact on a substantial number of small entities, and so has not conducted a regulatory flexibility analysis.

This final rule is not a "major rule" as defined in Executive Order 12291, dated February 27, 1981, and hence no regulatory analysis has been prepared. FEMA has determined that this final rule does not contain a collection of information requirements as described in Section 3504(b) of the Paperwork Reduction Act.

List of Subjects in 44 CFR Parts 80, 82 and 83

Federal Crime Insurance Program.

Accordingly, 44 CFR Parts 80, 82, 83 are amended as follows:

PART 80—DESCRIPTION OF PROGRAM AND OFFER TO AGENTS

1. The authority citation for Part 80 continues to read as follows:

Authority: 12 U.S.C. 1749bbb–17 *et seq;* Reorganization Plan No. 3. of 1978; EO 12127.

2. Section 80.1(a)(6) is revised to read as follows:

§ 80.1 Definitions.

(a) * * *

(6) "Discounts". The premium credit issued to a residential or business insured protected by a burglar alarm system, or other protective devices or methods used to mitigate losses and considered adequate by the Administrator for the type of risk involved, such as protective armored car services.

* * * * *

PART 82—PROTECTIVE DEVICE REQUIREMENTS

1. The authority citation for Part 82 continues to read as follows:

Authority: 12 U.S.C. 1749bbb *et seq;* Reorganization Plan No. 3. of 1978; EO 12127.

Subpart A—General

2. Section 82.1 entitled Definitions is amended by redesignating current paragraphs (h), (i), (j) and (k) as paragraphs (i), (j), (k) and (l), and by adding new paragraphs (h) and (m) to read as follows:

§ 82.1 Definitions.

* * * * *

(h) Holdup Alarm means a holdup alarm system that is constantly in operation and signals at an office of law enforcement authorities or at an office of an independent agency located away from the protected property. Accessible, but inconspicuous, buttons at hand or foot or knee levels are placed throughout the premises. An insured may, at his option, cause the alarm to sound on the premises, in addition to the remote location.

* * * * *

(m) Safe or Vault Alarm means a safe or vault protected by a central station or silent alarm supervised system.

PART 83—COVERAGE RATES AND PRESCRIBED POLICY FORMS

The authority citation for Part 83 continues to read as follows:

Authority: 12 U.S.C. 1749bbb *et seq;* Reorganization Plan No. 3. of 1978; EO 12127.

Subpart A—Residential Crime Insurance Coverage

2. Section 83.4, Residential Crime Insurance Rates, is revised to read as follows.

§ 83.4 Residential crime insurance rates.

The specific limits of coverage for applicable annual premiums for residential crime insurance coverage are revised to read as follows:

Policy limits:	*Annual premium*
$1,000	$32
2,000	42
3,000	52
4,000	62
5,000	74
6,000	84
7,000	94
8,000	104
9,000	116
10,000	126

Subpart B—Commercial Crime Insurance Coverage

3. In § 83.25, paragraphs (e) and (f) are revised to read as follows:

§83.25 Commercial crime insurance rates.

* * * * *

(e) The following tables shall be used to determine rates for commercial risks.

Federal Crime Insurance Program, Commercial Crime Insurance Rates, Annual Premiums—Class 1

Gross Receipts

Amount of insurance	Less than $100,000		$100,000, $199,999		$200,000, $299,999		$300,000, $499,999		$500,000, $999,999		$1,000,000 or greater	
	Option		Option		Option		Option		Option		Option	
	1	2	1	2	1	2	1	2	1	2	1	2
1,000	82	112	124	168	124	168	164	222	204	276	326	442
2,000	156	200	234	298	234	298	310	396	386	496	618	794
3,000	228	288	342	430	342	430	456	574	570	716	912	1,144
4,000	296	366	446	548	446	548	594	730	742	912	1,184	1,458
5,000	350	414	528	622	528	622	702	828	876	1,034	1,402	1,652
6,000	370	454	554	680	554	680	740	908	924	1,132	1,476	1,810
7,000	384	484	576	724	576	724	768	966	958	1,206	1,534	1,928
8,000	400	512	596	768	596	768	796	1,022	994	1,276	1,590	2,046
9,000	404	522	604	784	604	784	804	1,044	1,004	1,302	1,608	2,084
10,000	412	542	618	812	618	812	824	1,082	1,026	1,350	1,644	2,160
11,000	434	590	654	886	654	886	870	1,180	1,086	1,474	1,738	2,358
12,000	454	630	680	946	680	946	908	1,258	1,132	1,570	1,812	2,514
13,000	464	648	696	974	696	974	926	1,298	1,156	1,620	1,850	2,592
14,000	468	660	702	990	702	990	934	1,316	1,168	1,644	1,870	2,632
15,000	472	668	710	1,004	710	1,004	946	1,336	1,180	1,670	1,886	2,672

(1) Option 1: Burglary only; Option 2: Robbery only; Option 3: A combination of Options 1 and 2 in uniform or varying amounts.
(2) See discount page for applicable multipliers and discounts.

Federal Crime Insurance Program, Commercial Crime Insurance Rates, Annual Premiums—Class 2

GROSS RECEIPTS

Amount of insurance	Less than $100,000		$100,000, $199,999		$200,000, $299,999		$300,000, $499,999		$500,000, $999,999		$1,000,000 or greater	
	Option		Option		Option		Option		Option		Option	
	1	2	1	2	1	2	1	2	1	2	1	2
1,000	98	140	150	210	150	210	198	280	246	346	392	554
2,000	186	252	280	376	280	376	372	500	464	624	742	998
3,000	274	362	410	542	410	542	546	722	680	900	1,090	1,440
4,000	354	460	532	690	532	690	708	920	884	1,146	1,416	1,836
5,000	418	520	628	784	628	784	836	1,042	1,044	1,300	1,670	2,082
6,000	442	572	664	856	664	856	882	1,140	1,102	1,424	1,764	2,278
7,000	460	606	688	912	688	912	918	1,214	1,146	1,516	1,834	2,426
8,000	476	644	716	968	716	968	954	1,288	1,190	1,608	1,904	2,572
9,000	484	658	724	984	724	984	966	1,312	1,206	1,638	1,928	2,622
10,000	496	682	744	1,022	744	1,022	990	1,362	1,234	1,702	1,976	2,722
11,000	526	744	788	1,116	788	1,116	1,048	1,484	1,308	1,854	2,094	2,963
12,000	548	792	822	1,188	822	1,188	1,096	1,584	1,368	1,978	2,188	3,164
13,000	560	816	840	1,226	840	1,226	1,120	1,634	1,396	2,040	2,234	3,262
14,000	564	830	848	1,244	848	1,244	1,130	1,656	1,412	2,070	2,258	3,312
15,000	572	842	856	1,262	856	1,262	1,142	1,682	1,426	2,100	2,282	3,360

(1) Option 1: Burglary Only; Option 2: Robbery Only; Option 3: A combination of Options 1 and 2 in Uniform or Varying Amounts.
(2) See Discount Page for Applicable Multipliers and Discounts.

Federal Crime Insurance Program, Commercial Crime Insurance Rates, Annual Premiums—Class 3

GROSS RECEIPTS

Amount of insurance	Less than $100,000		$100,000, $199,999		$200,000, $299,999		$300,000, $499,999		$500,000, $999,999		$1,000,000 or greater	
	Option		Option		Option		Option		Option		Option	
	1	2	1	2	1	2	1	2	1	2	1	2
1,000	112	148	168	218	168	218	222	290	276	362	442	578
2,000	208	260	312	392	312	392	416	520	518	643	830	1,040
3,000	306	376	460	564	460	564	612	752	762	938	1,220	1,500
4,000	396	478	596	718	596	718	794	958	990	1,194	1,584	1,912
5,000	468	544	702	814	702	814	934	1,086	1,166	1,354	1,864	2,168
6,000	494	594	742	892	742	892	988	1,186	1,232	1,482	1,972	2,370
7,000	514	632	772	950	772	950	1,030	1,264	1,284	1,580	2,054	2,524
8,000	536	672	802	1,006	802	1,006	1,068	1,342	1,334	1,674	2,134	2,680
9,000	542	684	812	1,026	812	1,026	1,082	1,368	1,350	1,708	2,160	2,730
10,000	554	710	832	1,064	832	1,064	1,108	1,418	1,384	1,770	2,216	2,832
11,000	588	772	882	1,162	882	1,162	1,176	1,546	1,468	1,930	2,350	3,090
12,000	616	826	924	1,236	924	1,236	1,230	1,648	1,538	2,058	2,458	3,292
13,000	628	850	942	1,276	942	1,276	1,256	1,698	1,568	2,124	2,512	3,396

GROSS RECEIPTS—Continued

Amount of insurance	Less than $100,000		$100,000, $199,999		$200,000, $299,999		$300,000, $499,999		$500,000, $999,999		$1,000,000 or greater	
	Option		Option		Option		Option		Option		Option	
	1	2	1	2	1	2	1	2	1	2	1	2
14,000	636	864	954	1,296	954	1,296	1,270	1,726	1,586	2,154	2,536	3,448
15,000	642	876	964	1,314	964	1,314	1,284	1,752	1,602	2,186	2,564	3,498

(1) Option 1: Burglary Only; Option 2: Robbery Only; Option 3: A combination of Options 1 and 2 in Uniform or Varying Amounts.
(2) See Discount Page for Applicable Multipliers and Discounts.

Federal Crime Insurance Program, Commercial Crime Insurance Rates, Annual Premiums—Class 4

GROSS RECEIPTS

Amount of insurance	Less than $100,000		$100,000, $199,999		$200,000, $299,999		$300,000, $499,999		$500,000, $999,999		$1,000,000 or greater	
	Option		Option		Option		Option		Option		Option	
	1	2	1	2	1	2	1	2	1	2	1	2
1,000	124	152	186	226	186	226	248	302	308	376	494	600
2,000	234	270	350	408	350	408	466	542	582	674	930	1,080
3,000	342	390	514	588	514	588	684	782	852	974	1,366	1,560
4,000	446	498	666	748	666	748	888	996	1,106	1,242	1,772	1,986
5,000	522	564	786	846	786	846	1,046	1,128	1,304	1,408	2,088	2,252
6,000	554	618	830	926	830	926	1,106	1,234	1,380	1,542	2,208	2,466
7,000	576	658	864	988	864	988	1,150	1,314	1,436	1,640	2,300	2,626
8,000	598	698	898	1,046	898	1,046	1,198	1,394	1,494	1,740	2,390	2,784
9,000	606	712	910	1,066	910	1,066	1,212	1,422	1,512	1,774	2,420	2,838
10,000	622	738	932	1,106	932	1,106	1,242	1,474	1,550	1,840	2,480	2,944
11,000	660	804	990	1,206	990	1,206	1,316	1,606	1,644	2,008	2,632	3,210
12,000	688	856	1,034	1,288	1,034	1,288	1,378	1,714	1,720	2,140	2,752	3,424
13,000	704	884	1,056	1,328	1,056	1,328	1,408	1,766	1,758	2,208	2,812	3,530
14,000	712	896	1,068	1,346	1,068	1,346	1,424	1,794	1,776	2,240	2,844	3,582
15,000	720	912	1,080	1,368	1,080	1,368	1,438	1,820	1,796	2,272	2,872	3,638

(1) Option 1: Burglary Only; Option 2: Robbery Only; Option 3: A Combination of Options 1 and 2 in Uniform or Varying Amounts.
(2) See Discount Page for Applicable Multipliers and Discounts.

Federal Crime Insurance Program, Commercial Crime Insurance Rates, Annual Premiums—Class 5

GROSS RECEIPTS

Amount of insurance	Less than $100,000		$100,000, $199,999		$200,000, $299,999		$300,000, $499,999		$500,000, $999,999		$1,000,000 or greater	
	Option		Option		Option		Option		Option		Option	
	1	2	1	2	1	2	1	2	1	2	1	2
1,000	118	134	178	202	178	202	236	268	294	332	468	534
2,000	218	242	330	362	330	362	436	480	544	598	872	958
3,000	320	346	478	520	478	520	638	694	796	864	1,274	1,382
4,000	412	442	620	662	620	662	824	882	1,026	1,100	1,644	1,760
5,000	480	500	720	750	720	750	960	1,000	1,198	1,248	1,918	1,996
6,000	512	548	768	822	768	822	1,024	1,094	1,278	1,366	2,048	2,184
7,000	538	584	806	874	806	874	1,074	1,166	1,340	1,454	2,144	2,326
8,000	560	618	842	928	842	928	1,122	1,234	1,400	1,542	2,240	2,468
9,000	570	630	854	946	854	946	1,138	1,260	1,422	1,570	2,274	2,514
10,000	586	654	880	980	880	980	1,172	1,306	1,462	1,632	2,340	2,608
11,000	626	712	940	1,068	940	1,068	1,252	1,424	1,562	1,778	2,502	2,846
12,000	660	760	990	1,140	990	1,140	1,316	1,518	1,644	1,896	2,632	3,034
13,000	676	784	1,012	1,176	1,012	1,176	1,350	1,566	1,684	1,956	2,696	3,130
14,000	682	796	1,024	1,192	1,024	1,192	1,366	1,590	1,706	1,984	2,728	3,176
15,000	690	806	1,038	1,210	1,038	1,210	1,382	1,612	1,726	2,014	2,762	3,224

(1) Option 1: Burglary Only; Option 2: Robbery Only; Option 3: A combination of Options 1 and 2 in Uniform or Varying Amounts.
(2) See Discount Page for Applicable Multipliers and Discounts.

Federal Crime Insurance Program, Commercial Crime Insurance Rates, Annual Premiums—Class 6

GROSS RECEIPTS

Amount of insurance	Less than $100,000		$100,000, $199,999		$200,000, $299,999		$300,000, $499,999		$500,000, $999,999		$1,000,000 or greater	
	Option		Option		Option		Option		Option		Option	
	1	2	1	2	1	2	1	2	1	2	1	2
1,000	120	120	178	180	178	180	238	240	294	298	472	476
2,000	220	216	330	324	330	324	438	430	546	538	874	858
3,000	320	310	478	466	478	466	638	622	796	774	1,274	1,240
4,000	412	396	618	594	618	594	822	792	1,024	988	1,640	1,580
5,000	476	450	716	674	716	674	954	896	1,190	1,120	1,904	1,792
6,000	512	492	766	738	766	738	1,022	980	1,276	1,224	2,042	1,960
7,000	538	522	806	786	806	786	1,074	1,046	1,340	1,304	2,144	2,088
8,000	562	554	844	832	844	832	1,126	1,108	1,402	1,384	2,248	2,214
9,000	572	564	856	848	856	848	1,142	1,130	1,426	1,410	2,280	2,256
10,000	588	586	882	880	882	880	1,176	1,172	1,468	1,464	2,348	2,342
11,000	632	638	948	960	948	960	1,262	1,276	1,576	1,596	2,520	2,552
12,000	666	682	998	1,022	998	1,022	1,330	1,362	1,660	1,702	2,656	2,722
13,000	682	704	1,022	1,054	1,022	1,054	1,362	1,404	1,704	1,754	2,724	2,806
14,000	690	714	1,036	1,072	1,036	1,072	1,380	1,426	1,724	1,780	2,758	2,850
15,000	700	724	1,050	1,086	1,050	1,086	1,398	1,446	1,746	1,806	2,794	2,892

(1) Option 1: Burglary Only; Option 2: Robbery Only; Option 3: A combination of Options 1 and 2 in Uniform or Varying Amounts.
(2) See Discount Page for Applicable Multipliers and Discounts.

(f) If the premises are protected by an acceptable burglar alarm system, class E safe, supervised safe alarm system, holdup alarm or armored car service, premium discounts shall be permitted as follows:

I. BURGLARY CREDITS

Premises alarm system	Safe alarmed		Safe not alarmed	
	Class E or better	Other safe	Class E or better	Other/ None
None	.80	.95	.85	1.00
Local	.70	.75	.75	.90
Silent	.65	.75	.70	.80
Central:				
—Without Guard	.60	.70	.65	.75
—With Guard	.55	.65	.60	.70

II. ROBBERY CREDITS

PROTECTION SERVICE

Holdup buttons	Armored car	None
Yes	.85	.90
No	.95	1.00

Note: Multiply the burglary or robbery premium by the appropriate factor.

Package Discount

Apply a factor of .90 to the total premium if both burglary and robbery are purchased.

These amendments issued under 12 U.S.C. 1249bbb–17.

Harold T. Duryee,

Federal Insurance Administrator.

[FR Doc. 88–7479 Filed 4–5–88; 8:45 am]

BILLING CODE 6718-21-M

DEPARTMENT OF HEALTH AND HUMAN SERVICES

45 CFR Part 36

Indemnification of HHS Employees

AGENCY: Department of Health and Human Services.

ACTION: Final rule.

SUMMARY: This rule adds a new Part 36 to Title 45 of the Code of Federal Regulations. It parallels provisions adopted by the Department of Justice (28 CFR Part 50) and the Small Business Administration (13 CFR Part 114) in permitting indemnification of Department of Health and Human Services employees in appropriate situations, as determined by the Secretary or his or her designee.

EFFECTIVE DATE: April 6, 1988.

FOR FURTHER INFORMATION CONTACT: Darrel Grinstead, Associate General Counsel, Department of Health and Human Services, 330 Independence Avenue, SW., Room 5362, Wilbur J. Cohen Building, Washington, DC 20201, (202) 475–0150.

SUPPLEMENTARY INFORMATION: The Department of Health and Human Services does not presently indemnify its employees who are sued personally and suffer an adverse judgment as a result of conduct taken within the scope of employment, nor does it settle claims against employees, who are sued in their individual capacities, with the Department's funds. Since the 1971 Supreme Court decision in *Bivens v. Six Unknown Named Agents of the Federal Bureau of Narcotics*, 403 U.S. 388 (1971), lawsuits against federal employees in their individual capacities have proliferated. The most recent statistics from the Department of Justice indicate that over 14,000 claims had been filed against federal employees personally since the *Bivens* case. Nearly 5,000 such suits are now pending. Despite the fact the Department of Justice is aware of only 37 adverse judgments against federal employees in their individual capacities, suits personally attacking federal employees at all levels of government continue to increase. A growing number of these suits are being filed against HHS officials.

The potential for adverse judgments against a federal employee for actions taken within the scope of employment is detrimental to both the individual employee and the federal government. Although there are currently provisions for employees to request representation by the Department of Justice in these actions, the individual employee still bears the risk of personal liability for an adverse judgment as a result of doing his or her job. Moreover, the prospect of personal liability and the uncertainty as to what conduct may result in a lawsuit against the employee personally, tend to intimidate all employees, to impede creativity and to strifle initiative and decisive action. Employees' fears of personal liability affect government operations, decisionmaking and policy determinations.

The Department believes that lawsuits against federal employees in their individual capacities seriously hinder the effective functioning of the Department. A modification of HHS policy to permit indemnification would help alleviate this problem and would afford HHS employees the same protection given other federal officials.

This modification of HHS policy permits, but does not require, the Department to indemnify a Department employee who suffers an adverse judgment, or other monetary award, provided that the actions giving rise to the award were taken within the scope of employment and that such indemnification is in the interest of the United States, as determined by the Secretary or his designee.

The policy also allows the Department to settle a claim brought against an employee in his or her individual capacity by the payment of Department funds, upon a similar determination by the Secretary. Absent exceptional circumstances, the Department will not agree either to indemnify or to settle before entry of an adverse judgment. The modification of policy, which is analogous to the approach adopted by the Department of Justice, is designed to discourage the filing of lawsuits against federal employees in their individual capacities solely in order to pressure the government into settlement. In the usual case, under these regulations, the Department will not a settle a case, before trial and judgment merely because a dispositive motion filed on behalf of the employee has been denied. This regulation is applicable to actions pending against HHS employees as of its effective date.

Paperwork Reduction Act

This regulation is not subject to the Paperwork Reduction Act because it deals solely with internal rules governing Department of Health and Human Services personnel.

Cost/Regulatory Analysis

The Secretary has determined, in accordance with Executive Order 12291, that this rule will not constitute a "major" rule and therefore is not subject to a regulatory impact analysis requirement of the Order. Major rules are those which impose a cost on the economy of $100 million or more a year or have certain other economic impacts.

The rule will not have a significant economic impact on small entities; therefore, preparation of a regulatory flexibility analysis is not required under the Regulatory Flexibility Act (5 U.S.C. 601–612).

Waiver of Public Notice and Comment

These regulations are published in final form without the opportunity for public notice and comment because they relate to HHS management and personnel.

List of Subjects in 45 CFR Part 36

Administrative practice and procedure, Government employees.

Dated: March 16, 1988.

Otis R. Bowen,

Secretary.

For reasons stated in the preamble, Part 36, as set forth below, is added to Title 45 of the Code of Federal Regulations.

PART 36—INDEMNIFICATION OF HHS EMPLOYEES

§ 36.1 Policy.

(a) The Department of Health and Human Services may indemnify, in whole or in part, its employees (which for the purpose of this regulation includes former employees) for any verdict, judgment or other monetary award which is rendered against any such employee, provided that the conduct giving rise to the verdict, judgment or award was taken within the scope of his or her employment with the Department and that such indemnification is in the interest of the United States, as determined by the Secretary, or his or her designee, in his or her discretion.

(b) The Department of Health and Human Services may settle or compromise a personal damage claim against its employee by the payment of available funds, at any time, provided the alleged conduct giving rise to the personal damage claim was taken within the scope of employment and that such settlement or compromise is in the interest of the United States, as determined by the Secretary, or his or her designee, in his or her discretion.

(c) Absent exceptional circumstances, as determined by the Secretary or his or her designee, the Department will not entertain a request either to agree to indemnify or to settle a personal damage claim before entry of an adverse verdict, judgment or monetary award.

(d) When an employee of the Department of Health and Human Services becomes aware that an action has been filed against the employee in his or her individual capacity as a result of conduct taken within the scope of his or her employment, the employee should immediately notify the Department that such an action is pending.

(e) The employee may, thereafter, request either (1) indemnification to satisfy a verdict, judgment or award entered against the employee or (2) payment to satisfy the requirements of a settlement proposal. The employee shall submit a written request, with documentation including copies of the verdict, judgment, award or settlement proposal, as appropriate, to the head of his employing component, who shall thereupon submit to the General Counsel, in a timely manner, a recommended disposition of the request. The General Counsel shall also seek the views of the Department of Justice. The General Counsel shall forward the request, the employing component's recommendation and the General Counsel's recommendation to the Secretary for decision.

(f) Any payment under this section either to indemnify a Department of Health and Human Services employee or to settle a personal damage claim shall be contingent upon the availability of appropriated funds of the employing component of the Department of Health and Human Services.

Authority: 5 U.S.C. 301.

[FR Doc. 88-7490 Filed 4-5-88; 8:45 am]

BILLING CODE 4150-04-M

DEPARTMENT OF TRANSPORTATION

National Highway Traffic Safety Administration

49 CFR Part 571

[Docket No. 85-11; Notice 2]

Federal Motor Vehicle Safety Standards; Motorcycle Helmets

AGENCY: National Highway Traffic Safety Administration (NHTSA), DOT

ACTION: Final rule.

SUMMARY: This rule announces changes to Federal Motor Vehicle Safety Standard 218, *Motorcycle Helmets.* On September 27, 1985, the agency proposed to extend its performance requirements for the first time to all helmet sizes and to improve its test procedures and conditions. In addition, the agency requested comments on several cost-related questions and issues related to possible future motorcycle helmet rulemakings. This final rule responds to the public comments and amends the motorcycle helmet safety standard. This improved standard will benefit motorcyclists, moped and other motor vehicle users who wear motorcycle helmets.

EFFECTIVE DATE: October 3, 1988.

FOR FURTHER INFORMATION CONTACT: Dr. William J. J. Liu, Office of Vehicle Safety Standards, NRM-12, National Highway Traffic Safety Administration, 400 Seventh Street SW., Washington, DC 20590, (202) 366-4923.

SUPPLEMENTARY INFORMATION:

Background

Section 103 of the National Traffic and Motor Vehicle Safety Act of 1966 (15 U.S.C. 1392) requires the establishment of Federal safety standards for motor vehicles and motor vehicle equipment. These standards are amended by the National Highway Traffic Safety Administration (NHTSA) as appropriate, such as when new safety data become available or technological development warrant.

The agency's first Federal motor vehicle safety standard for motorcycle helmets (FMVSS 218) became effective in 1974. Although this standard has been demonstrated to be a significant factor in the reduction of critical and fatal injuries involving motorcyclists in motorcycle accidents, the standard has thus far not applied to all motorcycle helmets sold in the United States. Because of limited availability of headforms on which to test motorcycle helmets, FMVSS 218 previously applied only to motorcycle helmets that could be "placed on" the available size C headform. As a practical matter, this has limited the application of the standard to medium and large motorcycle helmets, since small motorcycle helmets could not be placed on the size C headform. Small helmets constitute approximately ten percent of the motorcycle helmet market.

A manufacturer of a motorcycle helmet subject to FMVSS 218 must certify that the helmet meets all of the standard's requirements. Those requirements include performance requirements for helmets for impact attenuation (shock absorption), penetration resistance (a sharp object striking the helmet), and retention (chin strap strength). Tests to determine compliance with these requirements are conducted under prescribed conditions, with the helmet secured to a metal test headform. In addition, FMVSS 218 establishes requirements dealing with peripheral vision, labeling, and internal and external projections.

Current FMVSS 218

The first of the three principal performance requirements in FMVSS 218 is that a motorcycle helmet must exhibit a minimum level of shock absorbency upon impact with a fixed, hard object. Compliance is determined by a two-party impact attenuation test. This test involves placing a motorcycle helmet on the test headform and dropping the headform and helmet (known as the headform assembly) in a guided free fall first onto a flat steel anvil and then, in a separate test, onto a hemispherical steel anvil. Each helmet is impacted at four sites with two successive, identical impacts at each site, at any point on the area above a prescribed test line. Two of these sites are impacted upon the flat anvil by dropping the headform assembly from a height of 72 inches (182.9 centimeters), and two sites are impacted upon the hemispherical anvil from a height of 54.5 inches (138.4 centimeters).

The impact attenuation requirement is expressed as limits on the acceleration levels of the headform and is quantified in g's, the gravitational acceleration, and used as the unit of acceleration. The acceleration level relates directly to the impact on the brain. The greater the number of g's, the greater the force or impact energy that is applied to the brain. A number of test studies (including the 1980 study by the Japanese Automobile Research Institute, discussed later in this preamble) express the threshold of injury to the human brain in g's. Standard 218 limits acceleration to a peak level of 400g and requires that no helmet exceed 200g for a cumulative duration of more than 2.0 milliseconds and 150g for a cumulative duration of more than 4.0 milliseconds.

Four impact attenuation tests must be conducted within a specified time limit (discussed later in this preamble) and each must be conducted after the helmet has been conditioned in one of four conditioning environments for 12 hours. These conditioning environments are:

(a) Ambient conditions: Exposure to 70°F (21°C) and relative humidity of 50 percent.

(b) Low temperature: Exposure to 14°F (−10°C).

(c) High temperature: Exposure to 122°F (50°C).

(d) Water immersion: With water at 77°F (25°C).

The second performance requirement is a penetration test, in which a metal striker is dropped 118.1 inches (3.0 meters) in a guided free fall onto a stationary helmet. Two penetration blows are applied at least three inches (7.6 centimeters) apart from each other and at least three inches from the centers of the impact attenuation blows. To meet the performance requirement, the striker may only come in contact with the helmet and may not come in contact with the surface of the headform. The penetration test, like the impact attenuation test, is conducted within certain time constraints and with the helmet conditioned in the four previously mentioned environments.

The third performance requirement of Standard 218 tests chin strap strength. It requires that the retention system or any component of the retention system of a motorcycle helmet be able to withstand a preliminary load of 50 pounds (22.7 kilograms) of tensile force (for 30 seconds) and then a test load of an additional 250 pounds (113.4 kilograms) (for 120 seconds). To meet the performance requirement, the helmet retention system may not break during the times loads are applied and the adjustable portion of the retention system device may not move more than one inch between preliminary and test load conditions. If a retention system consists of components, each component must meet these requirements. As with the impact attenuation and penetration tests, the motorcycle helmet must be exposed to the four conditioning environments before being tested for the retention requirements.

Standard 218 also prescribes requirements for labeling, projections, and peripheral vision requirements. A manufacturer must permanently affix to each helmet labeling which includes the manufacturer's name or identification, precise model designation, size, month and year of manufacture, and, as a certification of compliance with the standard, the DOT symbol. The labeling requirements also provide that the manufacturer must supply to the purchaser information concerning shell and liner composition, cleaning instructions, and warnings to make no modifications, and to have the helmet checked by the manufacturer or destroyed if it experiences a severe blow. This additional information may be conveyed on a tag attached to the helmet, or by other appropriate means.

Standard 218 does not allow any rigid projections inside the shell and limits those outside the shell to those needed to operate essential accessories. An external protrusion may not be more than .20 inch (the new provision adopted in this rulemaking is .20 inch; the currently effective limit is .19 inch). Finally, Standard 218 requires that the helmet provide a minimum of 105° peripheral vision to either side of the mid-sagittal plane (the middle of the face).

Each manufacturer must certify that its helmets meet the performance requirements of the standard before the helmets are offered for sale. The test procedures in Standard 218 specify the manner in which procedures will be conducted by any laboratory under contract with NHTSA to test helmet compliance. Additional details on how the tests are to be conducted are contained in NHTSA Laboratory Procedure for Motorcycle Helmet Testing (TP-218-02; October 18, 1984).

The Proposed Rule and Public Comment

The agency proposed changes to FMVSS 218 on September 27, 1985 (50 FR 39144). In addition to specific changes in the Standard, the agency sought public comment on eight cost-related questions and six issues for possible future rulemaking. In response, the agency received public comments from four motorcycle helmet manufacturers (Bell Helmets, Inc., Florida Safety Products, Inc., Javelin, Inc., and Marushin Kogyo Co., Ltd) and from one company that manufactures test equipment and tests motorcycle helmets (United States Testing Company, Inc.). The proposed changes, the issues raised by the agency for possible future rulemaking, as well as public comment submitted on these, are discussed below.

Applicability of Standard to All Helmets (S3.). The principal change in FMVSS 218 is the extension of the standard to all motorcycle helmet sizes. It has been the agency's intention since it promulgated its first motorcycle helmet safety standard to extend this standard to all helmets as soon as practicable. The principal cause of the delay in doing this has been the lack of availability of headforms other than the size C headform. This situation resulted in limited application of the standard, since small motorcycle helmets were not able to be placed on the size C headform to be tested and thus were not required to be certified as complying with FMVSS 218.

This impediment no longer exists, because the agency has developed three new test headforms, small, medium, and large, which will replace the single size C headform. The September 27, 1985 proposed rule contained a lengthy description of the process used to develop these headforms. The basic steps included the development of a numerical table describing the exterior geometry of old size C headform and the creation of a new medium headform based on the table. The table then was used to derive the measurements for a small headform and a large headform, using a scaling factor of 0.8941 for the small headform and a scaling factor of 1.069 for the large headform. Detailed specifications for the headforms are contained in the Appendix to the final rule; these specifications should ensure that each headform can be accurately cast and/or machined.

As the result of testing, the agency believes that helmets previously tested on the size C headform will achieve comparable results on the new medium headform. In addition, the three new headforms will provide a more reliable fit for all helmets being tested, thereby increasing the repeatability of the testing.

For the first time, the agency proposed details on the interior geometry of the headform. While the proposal would allow the agency to retain some flexibility on the details of the interior of the headform (to allow for differently designed support assemblies and still retain the ability to meet the standard's test headform and support assembly weight requirement for the impact attenuation test), the level of specificity would be sufficient to establish a fixed center of gravity for the test headform—the center of the ball socket joint. Being able to fix the center of gravity (and, thus, fix the location of the accelerometer as well, since the accelerometer is located at the headform's center of gravity) also enhances the test's repeatability.

No specific comments were received on the development of the new headforms, although United States Testing Company, Inc. (U.S. Testing) stated that it generally supported the proposed changes in the proposed rule. In addition, Javelin, Inc. (Javelin) stated that it did not oppose the proposed test headform system. The final rule adopts the new small, medium, and large headforms as proposed.

Since the proposed dimensions of the exterior and interior of the headforms were published, the agency has noted in the FMVSS 218 rulemaking docket that the manufacturer of the headforms used for the agency's testing has made minor modifications to the interior of the headform. The manufacturer has changed the size of the four holes inside the headform for the tie-down screws from ¼ inch–20 helical coil insert to 5/16 inch–18 helical coil insert. These changes have been made to all headform sizes to increase the holding power of the screws to the headform. These changes also may reduce the frequency of adjustments to the monorail test equipment, especially when the large test headform is used. These changes are reflected in Figures 6, 7, and 8 in the Appendix to the Standard.

Impact Attenuation Test (S5.1). The current impact attenuation performance test limits the acceleration levels of the test headform. Expressed in g's, a test headform acceleration level is limited to a maximum of 400g. In addition, acceleration in excess of 200g is limited to a cumulative duration of 2.0 milliseconds and acceleration in excess of 150g to a cumulative duration of 4.0 milliseconds. Recent confirmation of the appropriateness of these requirements is found in the 1980 study of the Japan Automobile Research Institute, Inc., "Human Head Tolerance to Sagittal Impact: Reliable Estimation Deduced from Experimental Head Injury Using Subhuman Primates and Human Cadaver Skulls," K. Ono, A. Kikuchi, M. Nakamura, H. Kobaysahi, and N. Nakamuri, Proceedings from the 24th Stapp Car Crash Conference, SAE 801303, 1980 (JARI study). The JARI study developed a human head impact tolerance threshold curve, which indicates that the threshold of human concussion is about 200g at 2.3 milliseconds. Standard 218's limitation of 200g at 2.0 milliseconds provides the necessary margin of safety. The agency's compliance testing shows that, in general, modern helmet technology has no problem meeting these requirements.

Although the impact attenuation test's acceleration levels were not proposed for change, the agency solicited comments on the issue. Both Javelin and Bell Helmets, Inc. (Bell) submitted comments and both recommended that the peak g be lowered (currently 400g)—Javelin recommending that it be lowered to 250g and Bell that it be lowered to 300g. Javelin stated that most brain injuries start below 400g and that there are no brain injuries at 250g. Neither Javelin nor Bell submitted data to support its position.

With regard to the dwell time requirements (limiting acceleration of 200g to 2.0 milliseconds and acceleration of 150g to 4.0 milliseconds), Bell stated that the original dwell times were established when the compliance test system was a swing-away test rig. Thus, when the standard changed to a drop test approach, the time duration increased on all of the helmets. Bell's contention is that this was due to the change in the system, and not because of any change in the helmets.

Bell tried to discount the agency's use of the dwell time requirements by hypothesizing that what NHTSA really is regulating is a change in velocity, since NHTSA establishes maximum g levels for certain periods of time and the product of acceleration and time duration is velocity. Using this premise, Bell contends that NHTSA would fail a change in velocity greater than 3.923 meters per second at 200g for 2 milliseconds duration or more, yet would allow a change in velocity of 7.8 meters per second at 199g for 4 milliseconds duration or less. Bell commented that the standard implies that "more is less", because NHTSA would say a change in velocity of 3.923 meters per second at 200g is life

threatening, but a change in velocity of 7.8 meters per second at 199g is within human tolerance.

Bell misunderstands the role of change of velocity in relation to the dwell time requirements of FMVSS 218, and bases all of its calculations on a limited and erroneous assumption. Bell assumes that, since both acceleration and time are elements of the performance requirement, that the agency is regulating change in velocity (maximum acceleration multiplied by time duration, in the case of rectangular g-t curves). In addition, Bell developed its "more is less" theory solely on the basis of calculating change of velocity from a single rectangular acceleration-time response curve.

Calculating change of velocity from a rectangular g-t curve can result in many different impacts generating the same change of velocity. For example, a change of velocity of 9.82 m/sec is the measure of a rectangular response curve of 500g–25 (t=milliseconds, which would represent an impact on a hard surface with a high acceleration level and short stopping time), as well as the measure of a rectangular response curve of 2g–500t (which would represent an impact on a soft surface, with low acceleration and long stopping time). While these two examples have the same change of velocity measure, clearly the 500g–2t response is highly injurious while the 2g–500t is not. The sameness in the change of velocity in these very different examples demonstrates that change of velocity alone is insufficient to determine injury.

As previously stated, the agency is not regulating change in velocity because it alone is not sufficient to relate impact and injury. Rather, researchers believe that peak acceleration and time duration at a certain level of acceleration are accurate determinatives of human brain injury potential. Limiting peak g and time duration for the acceleration-time response curve, although defining limits for the elements which also constitute change of velocity, it not limiting change in velocity. In summary, the agency believes the basic premise of Bell's comment is grounded in a misunderstanding of the role that change of velocity plays in applying time duration requirements to performance levels of motorcycle helmets. Further, Bell's reliance only on rectangular response curves is inappropriate.

In response to the other commenters recommending a lower maximum g level, the agency appreciates that there is a difference of opinion in the helmet manufacturing industry. We encourage any commenter wishing that the agency consider a change in the requirement to submit biomechanical data in support of its position. To date, the commenters have not submitted data which supports or contradicts in any way the 1980 JARI study. The current requirements in FMVSS 218 are consistent with the JARI study. Accordingly, the agency believes that they are appropriate.

Retention test—(a) dynamic testing (S5.3). The agency asked whether the retention test should be changed to require dynamic testing to prevent the helmet from rotating on the head and perhaps coming off the head in an accident. Bell responded that they have done considerable research and development on this, and that retention testing should include a dynamic test to check roll-off as well as strap strength.

Retention test—(b) chin guard area. The agency asked if the standard should include procedures for the chin guard area or full facial coverage of the helmet. Bell answered affirmatively, stating that a test for face bars should be developed.

With respect to the retention test responses, for both the dynamic testing question and the chin guard area question, no substantive or quantitative data were submitted. The agency will consider changes with regard to the helmet's retention system, but only if it receives appropriate data. The agency requests data to be submitted as they become available.

Projections (S5.5). Although the agency did not propose any change to the prohibition against rigid interior projections, Marushin submitted a comment requesting that the agency define "rigid". Marushin stated that it is not realistic to prohibit *all* rigid projections inside the shell, because any fastening system for essential accessories would have some kind of inside projection. The agency will consider a clarifying amendment on rigid projections as an issue for possible future rulemaking.

Selection of applicable test headform (new S6.1). The proposed rule contained a new S6.1, Selection of appropriate headform, specifying designated size ranges of helmets to be tested on the small, medium, and large test headforms. The premise of the proposal was that each helmet should be tested on the headform that correlated most closely with the heads of the persons likely to purchase the helmet. The agency believed that the manufacturer's size designation was the best method for determining the likely size of those heads. The proposal called for a helmet with a manufacturer's designated helmet size or size range of 6⅝ (European size 53) or smaller to be tested only on the small headform; a helmet with a manufacturer's designated helmet size or size range between 6¾ and 7½ (between European size 54 and size 60) to be tested on the medium headform; and a helmet with a manufacturer's designated size or size range of 7⅝ (European size 61) or larger to be tested on the large headform. Paragraph S6.1.2 further provided that any helmet having a designated size range that overlaps all or a portion of two or more of the three specified ranges must be tested on all headforms included within the helmet's size range.

Bell recommended that the upper end of the small headform size be changed from 6⅝ to 6¾, because Bell's helmets sized at 6¾ cannot be placed on the medium headform. The intention of the proposed changes is to ensure that all motorcycle helmets are subject to compliance testing. Accordingly, the final rule reflects Bell's requested change in sizing.

Marushin Kogyo Co. (Marushin) requested that the agency define the measuring method of each helmet size, including the contour to be measured and the measuring device. Marushin also requested that the metric unit of the helmet size be added to the standard. The agency declines to specify how a manufacturer should measure its helmets for sizing, because this reflects design considerations which are most appropriately determined by the manufacturers. Also, the designation method used in the proposed rule provides adequate size information, since it is adopted from long-established industry procedures. The American designation, for example, 6¾, indicates 6¾ inches, the diameter of an equivalent circle; the European equivalent in parentheses, for example, 54, indicates 54 centimeters, the circumference of the equivalent circle. No change has been made in the final rule.

Bell opposed the requirement that a helmet be tested on more than one headform if its sizing extends beyond the limits of a single size range. As an alternative, Bell suggested that any helmet falling within the size ranges of two or more headforms be tested on the largest of those headforms, noting that approximately five percent of its helmets would have to be double tested under the proposed rule.

The agency has reviewed test results of the same helmet being tested on two different size headforms, and has found that the results are not consistent. Some smaller helmets tested better on larger test headforms and some larger helmets

tested better on smaller test headforms. This is an indication to the agency that testing only on the larger headform as Bell suggests would not ensure that a given helmet also would pass the performance requirements when tested on a small headform. The agency therefore believes the multiple testing rule is needed to ensure that any helmet falling within the size range for any particular headform size meets the performance requirements when tested on that headform. No change has been made in the final rule.

Headform test line (new S6.2.3). Paragraph S6.2.3 describes how to determine the test line of a helmet and Figure 2 in FMVSS 218 graphically shows the test line on a headform. All strikes or impacts must be above the designated test line. The area above the test line represents the more vulnerable area of the skull and the required test area on a motorcycle helmet. In the proposed rule, the agency asked three questions related to the helmet test line:

1. Should the test line marking the limit of the test surface in Figure 2 of the Standard be lowered or should the test be revised in other ways to provide more protection in accidents for the lower part of the back of the head or the front of the head in the forehead area, or to improve the performance of the helmet from the side?

2. What requirements would represent the optimal trade-off between helmet weight, visibility, hearing and other helmet design criteria?

3. Do current requirements represent a reasonable trade-off?

Bell was the only customer to respond to these questions. While Bell stated the FMVSS 218 has proven to offer good protection within the existing trade-offs scheme, Bell did recommend that the test line be lowered in the back of the head area. Bell or any other manufacturer desiring that NHTSA consider revising the test line in a future rulemaking should submit supporting data.

Temperature Conditioning (new S6.4) The agency asked whether the low temperature conditioning requirements should be changed so that the interior surface of the helmet, or the headform, is at body temperature for the impact attenuation and penetration tests.

Bell stated that it believes the agency should consider the inner and outer temperatures of the test helmets. Florida Safety Products, Inc. (Florida) believes that any tests on a helmet subjected to low temperature conditions is unrelated to real life conditions, unless the helmet has a simulated human head in it. Florida has tested helmets conditioned to 10°F containing a bladder conditioned to 98°F to simulate a human head. Although it did not elaborate, Florida indicated that these test conditions produced a "startling difference in test results" from those for helmets tested under current FMVSS 218 procedures.

Florida also attached a U.S. Army Aeromedical Research Laboratory study on this subject, which concluded that the current FMVSS 218 requirements do not simulate potential, real world, cold climate conditions, particularly because the headform is deemed too cold, and therefore are inappropriate for the determination of cold temperature dynamic response of a helmet system. The study recommended that testing be done under conditions that simulate potential, real world conditions as closely as possible. Florida concluded its comments by recommending a change in the standard which would require that the test headform be conditioned to body temperature for the impact attenuation and penetration tests.

The agency acknowledges that temperature gradients exist, and that the temperature of the test headform (or other substance on which the helmet is placed) may affect the temperature of the helmet. However, what the agency lacks, and what the commenters did not submit, are any data indicating any link between differences in impact attenuation and penetration test results and changes in temperature. NHTSA requests any data, including specific test results, which the agency may use to evaluate future rulemaking decisions.

Bell also commented on the procedure used to wet the motorcycle helmet for the water immersion conditioning requirement (new S6.4.1(d)), recommending that the wet test be a "spray" type test as opposed to the current soak test. Bell further stated that they have indications that some of the liners have been moved out of position because of excess water in the helmet. As with other "new" information received from commenters, the agency will consider this recommendation in the context of a possible future rulemaking and requests the submission of specific data.

Second Impact. The impact attenuation test (S7.1.2) states that each helmet is impacted with two successive, identical blows at each site, from a drop height of 72 inches onto the flat anvil and from a drop height of 54.5 inches onto the hemispherical anvil.

Javelin recommended that the agency change the impact attenuation test conditions. Their recommendation was that the agency eliminate the requirement for the second impact at each site and, in the alternative, specify 120J impact energy for the first (and only) impact on the flat anvil and 95J impact energy for the first (and only) impact on the hemispherical anvil (J = joules, a measure of energy).

Translating J's into drop heights, Javelin's recommendation for the medium test headform assembly would be approximately 97.2 inches, as opposed to FMVSS 218's drop height of 72 inches onto the flat anvil. The equivalent drop height for 95J is about 76 inches, as opposed to FMVSS 218's drop height of 54.5 inches onto the hemispherical anvil. If adopted, expressing the impact requirements in terms of energy units means that the drop heights would be dependent upon the mass of the test headform used and would be different for each size test headform.

Conversely, Javelin's recommendation would require that the same amount of energy be used for each size headform. However, Javelin did not provide any supporting data for their proposed test procedure change. The current FMVSS requires that the different size test headform and motorcycle helmet assembly be dropped from the same height, which results in different amounts of energy being imparted, since impact energy changes with mass, and the different headform assemblies have different amounts of mass. The agency adopted the single height requirement to simulate crash conditions. NHTSA believes that a consistent drop height more accurately simulates reality than a consistent measure of energy.

With regard to eliminating the second impact, the agency believes that current FMVSS 218 establishes minimum performance requirements. The purpose of requiring the second impact at each test site is to establish a minimum level of helmet residual impact absorbing capability. In real world accidents, a second impact may occur quickly after the first, perhaps within one or two seconds and perhaps at a different place. While there is no existing test method for conducting second impacts within such a short time frame, it is known that the human head's tolerance is lowered when subjected to repeated blows.

While the agency's second impact test does not reproduce potential, multiple impacts in a single accident, it does establish that the material has sufficient ability to recover its protective capabilities in the particular location where it has been impacted. For these reasons, the agency believes that retaining a second impact test is important.

While various manufacturers have recommended that the agency eliminate the second impact requirement, no one has submitted data to demonstrate that the second impact is not appropriate or provided a rationale for eliminating the requirement. In fact, all other known standards which have been established by private standards organization or by foreign countries require equal or higher impact levels than FMVSS 218 for both the first and second impacts. Absent contradictory data, the agency believes that it is appropriate to retain the standard's current requirements.

Test Conditions: Time limitations for the impact attenuation test and the penetration test. The NPRM proposed that the impact attenuation test (new S7.1.3) and the penetration test (new S7.2.3) start at exactly two minutes following removal of the helmet from the conditioning environment and that the two successive impacts for each test site be completed within four minutes. If either time requirement is not met, the helmet must be returned to the conditioning environment and the test series begun again. Under the current standard, there is no minimum starting time but the impacts must be conducted within five minutes. The reduction in test time limits will reduce the temperature variations from test to test with the same helmet and will provide more repeatable test results.

The agency also requested comments from manufacturers and test laboratories about whether a helmet's performance during the retention test (chin strap) is also temperature sensitive.

The agency did not receive any comments on its proposed time limitation changes to the standard or on its request concerning the time sensitivity of the retention system test. The proposed rule provisions are adopted in the final rule without change.

Resonant frequency of the test headform (new S7.1.5). The NPRM provided that a test headform may not exhibit resonant frequencies below 2,000 Hz (cycles/seconds)(new S7.1.5), lowered from the currently specified 3,000 Hz (old S7.1.4). The purpose of this requirement is to ensure that headform frequencies do not distort helmet response measurement. The fundamental helmet frequency is estimated to be below 1,000 Hz and the tested resonant frequencies for the new small, medium, and large headforms exhibit frequencies well above 2,000 Hz. Setting a minimum resonant frequency of 2,000 Hz for the headform will eliminate any risk of interference with test results, while allowing some flexibility in the design and machining of headform interiors (for example, there can be variations in wall thickness).

Since the agency did not receive any comments on this provision, it adopts the requirement as proposed.

Use of the monorail drop test equipment (new S7.1.6). The agency specified in the proposed standard that it would use the monorail drop test equipment in the conduct of the impact attenuation test (new S7.1.6). The agency has been using the monorail drop test equipment, but it had not specified its use in the standard before. The agency uses the monorail drop test equipment because the impact point on the helmet can be fixed. The other frequently used system, the twin wire system, allows the headform assembly to rotate downward, making it hard to predict successive impact points. Added friction due to this downward rotation can cause speed variations, which in turn may produce response variations.

The agency received several comments on its use of the monorail drop test equipment. Javelin suggested that test equipment be optional to the manufacturer, contending that if the twin-wire equipment is adjusted, it can match the performance of the monorail drop test equipment. Bell, while not objecting to the monorail drop test equipment itself, questioned the agency's statement that the monorail drop test equipment is more consistent, contending that two NHTSA contract laboratories, Dayton T. Brown and Southwest Research, had different test results with the monorail drop test equipment. Finally, Marushin specifically requested that the twin-wire system be authorized, since it is Marushin's belief that the reliance on the monorail drop test equipment is premature and that the twin-wire testing system is the most common system in place throughout the world. As a practical matter, Marushin does not know of a reliable source from which to get the monorail drop test equipment.

The agency does not consider the different test results experienced by Dayton T. Brown and Southwest Research as being comparable. Certain test differences were due to differences in instrument control practice. However, according to a worst case analysis report provided by each laboratory, variance due to instrumentation differences alone is less than five percent, well within the tolerance range. As mentioned earlier, NHTSA's Laboratory Procedure for Motorcycle Helmet Testing (TP-218-02, October 1984) includes procedures for the calibration of measurement and test equipment as well as provisions to record all test data. The procedures used in this manual are in accord with established industry practice and test laboratories should ensure that these procedures are used in the conduct of all compliance testing.

The testing done by these laboratories was not designed to be a comparison of like test procedures and like helmets, and should not be viewed as such. The testing labs arrived at different results for some tests, and like results for other tests. Tested helmets must meet performance requirements for any impact within the prescribed test area. Further, a manufacturer must certify that *all* areas within the test area meet the performance level. When laboratories test helmets, however, there could be a wide difference in the actual location on the helmet which is impacted. These different orientations of the helmets may result in different test results. The results should not be so disparate, however, that in one lab's test a particular helmet model passes and in another lab's test the same helmet model fails. In the 3,008 drops of the different laboratories reviewed by the agency, only three indicated different pass/fail results. (One of these was a failure due to the helmet liner splitting, not a failure based on actual helmet performance.) The agency considers these few disparities inconsequential.

The agency does not intend to impose an addition burden by identifying the monorail drop test equipment as the method by which it tests compliance. As stated in previous rulemakings and interpretations, a manufacturer is not required to follow specifically the test procedures identified in a particular standard. The manufacturer must, however, ascertain that the product will conform to the standard's requirements when it is tested by the specified method. In assuring itself that its product, if tested, will conform to the standard's requirements, the manufacturer must exercise due care and utilize sound engineering judgment. As a practical matter, the manufacturer may continue to use the twin wire system, so long as the manufacturer uses "due care" to ensure that performance is comparable to those tested with the monorail drop test equipment. "Due care" is determined on a case-by-case basis and whether a manufacturer's action constitutes "due care" will depend, in part, upon the availability of test equipment, the limitations of available technology, and, above all, the diligence evidenced by the manufacturer.

Information available to the agency concerning the one known manufacturer and seller of the monorail drop test

equipment is filed in the Standard 218 Rulemaking Docket, including an estimated cost of $17,000 for the testing equipment and instrumentation.

Penetration Test (S7.2). The agency asked whether the geometric configuration of the pointed penetration test striker should be modified to resemble the narrow surface in the 1985 Snell standard. The Snell standard includes a penetration test which involves a non-pointed object designed to represent a common roadway obstruction.

Both Bell and Marushin indicated that they preferred the non-pointed object used in the Snell standard.

Javelin recommended that the penetration test be modified to coincide with a recommendation by Professor H. H. Hurt in his 1981 study ("Motorcycle Accident Cause Factors and the Identification of Countermeasures", H. H. Hurt, J. V. Ouellet, D. R. Thom, Traffic Safety Center, University of Southern California, DOT HS-805 862, January 1981): " * * * [I]n actual accident conditions, a 90° metal edge was the much more common threat than the pointed surface of the FMVSS 218 standard penetrator * * *. The conical point penetrator of the current test should be replaced with a hardened steel edge approximately ⅛ inch thick and 1 inch long, in order to be representative of accident impact." (At page 325).

Javelin's comment indicated that Javelin believes that a thermoplastic helmet with thick and less dense liner and a matching shell of marginal penetration performance (according to current FMVSS 218) is a safer helmet than one with a denser liner designed to resist penetration by a pointed steel marker. The agency does not agree, since the biomechanical data available to NHTSA indicate that too thick a liner results in sustained g levels beyond the 2.0 and 4.0 milliseconds allowed by the standard. These responses would result in injuries.

Further, while the Hurt report does recommend that NHTSA adopt the Snell non-pointed object for its impact attenuation test, its general recommendations state that FMVSS 218 "* * * provides a high level of protection for the typical traffic accident, and appears to need only minor modifications." (Hurt Report, at p. 422) All of the Hurt recommendations, along with the specific comments of Bell, Javelin and Marushin will be evaluated in the context of a possible future rulemaking. The agency requests specific data in support of this change.

Metric Equivalents. The proposed rule contained metric equivalents for all inch and pound measurements, except for the headform dimensions in the Appendix. The metric equivalents in centimeters for the inch dimensions in Table 2 and Figures 6, 7, and 8 can be obtained by multiplying 2.54 to all dimensions. There were no comments on this issue, and the final rule includes metric equivalents as appropriate.

Other standards. The proposed rule asked if NHTSA should consider adopting additional requirements which are contained in other motor vehicle safety standards, for example, the Snell Memorial Foundation Standard, the American National Standards Institute (ANSI) Standard or European standards, such as the ECE standard.

Bell responded, in the affirmative. In considering the adoption of other standards' requirements in future rulemaking, the agency will need data related to performance of motorcycle helmets. The agency requests that anyone having this data submit it to NHTSA for consideration.

Other changes to final rule. In addition to the changes in response to comment, this final rule also contains certain technical, nonsubstantive changes, as described below:

General. The final rule places all of the tables and figures of the standard into one Appendix and the old Appendix is removed. This regrouping has required changes to several of the cross-references in the Standard. For example, in the definition of "Test headform", the previous reference to the old Appendix is removed and replaced with a reference to Table 2 and Figures 5 through 8.

S3 Application. The final rule adds the word "all" before the word "helmets", to clarify the Standard now applies to all helmets offered for sale in the United States, regardless of size.

S4 Definitions. The changes include placing the definitions in alphabetical order and making a cross reference amendment of the kind described above under General changes.

S5.6 Labeling. This section is renumbered to provide consistency in the numbering scheme and to provide for numbering for the first time to undesignated paragraphs. For example, old S5.6.1(1) is now S5.6.1(a). Previously undesignated paragraphs containing instructions to the purchasers of helmets have become numbered paragraphs (1) through (4) under S5.6.1(f), Instructions to the purchasers.

Helmet position. In S6.3.1, as well as in other places where it appears, the term "prior to" has been replaced by the word "before".

S6.4 Conditioning. An additional numerical breakdown has been provided for these provisions, so that a newly designated S6.4.1 contains the conditioning requirements before testing and S6.4.2 contains conditioning requirements during testing.

S7. Test conditions. In S7.1.4, one paragraph has been broken down into two designated paragraphs: S7.1.4(a) contains the impact attenuation free fall requirements onto the hemispherical anvil and S7.1.4(b) contains the impact attenuation free fall requirements onto the flat anvil.

In S7.1.9, the Standard requires that the acceleration data channel comply with the SAE Recommended Practice J211 requirements for channel class 1,000. The proposed rule inadvertently omitted the date of the Standard. The agency intends the incorporation by reference of SAE Recommended Practice J211, Instrumentation for Impact Tests, to be to the June 1980 edition, which is substantively the same as the previously incorporated by reference 1970 edition. Accordingly, S7.1.9 has been amended to include a reference to the 1980 edition.

Costs and Benefits of FMVSS 218

In an attempt to determine the costs associated with complying with FMVSS 218, the agency posed the following questions in the NPRM. When there was a response, it immediately follows the question.

1.(a) How many helmet manufacturers have, or do not have, their own testing equipment?

Bell and Marushin indicated that they have their own testing equipment. Marushin's is twin-wire equipment.

(b) Of the manufacturers with equipment, what percentage of helmet testing is done by outside laboratories?

Marushin stated that they have an outside laboratory test helmets for calibration and comparison purposes once a year.

2.(a) How many test headforms would helmet manufacturers, who conduct their own testing, need to purchase to meet the requirements of the rule?

Bell indicated that even though they have had a complete set of headforms for several years, they have ordered a new set to ensure that they are using the same headforms as the NHTSA compliance test contractors. Marushin indicated that they already have a set, but that they will need to perform precise dimensional checks of the headforms against the requirements of the standard to ensure continued compliance.

(b) How many manufacturers would do their own machining of the headform?

Marushin indicated that they would use a subcontractor and Bell stated their doubt that any manufacturer would do its own, even though Bell has done it in the past.

3. What are the testing costs for helmet manufacturers conducting their own testing?

Marushin estimated about $200 a helmet, while Bell stated that it was difficult to compute costs for in-house testing, since they have two full-time technicians who conduct quality control, new product research and development and competitors' model testing on a daily basis.

4. What is the cost of redesigning a motorcycle helmet shell and its liner?

Marushin estimates $50,000 and Bell indicated that the cost of redesigning a shell and linear system for a helmet varies by thousands of dollars depending on the changes made. Generally, it takes six months to a year to develop a new model and complete on-road technical testing.

5. What percent of current helmet production can be placed on the size C headform (now the medium headform)?

Marushin estimated roughly 90 percent and Bell estimated 99 percent.

6. What percent of helmet production would be tested on each of the small, medium and large headforms?

Small headform: Marushin, 10 percent; Bell, 1 percent (as the Standard is amended in this final rule).

Medium headform: Marushin, 70 percent; Bell, 85 percent.

Large headform: Marushin, 20 percent; Bell, 14 percent.

7. What percent of helmets would need to be tested on more than one size headform?

Bell: Five percent. (See previous discussion about required multiple testing.)

8. Is there any data comparing effectiveness of complying versus non-complying helmets?

Marushin replied that they had no data. Bell stated that "there is considerable data to indicate that helmets passing a more rigid standard in some ways, but that do not pass the DOT standard, have saved many lives without any negative side effects." Bell indicated that it was referring to the time duration requirement, and that the maximum g rule is much more important than the time duration requirement, and helmets that can pass a more stringent (lower) maximum g level than FMVSS 218 may not comply with FMVSS 218 because it cannot meet the time duration requirement. The agency assumes that Bell is speaking of high-performance helmets that are designed for off-road uses, such as automobile racing, or possible standards in existence in other countries.

Also in an attempt to estimate the costs associated with complying with FMVSS 218, the agency contracted with HH Aerospace Design Company to perform a cost/benefit study of the effects of using several headform sizes in testing motorcycle helmets. ("Costs/Benefit Study of Effects of Using Several Headform Sizes in Testing Motorcycle Helmets Under Federal Motor Vehicle Safety Standard 218", Contract No. DTNH 22-80-C-0736, Final Report, September, 1980.) This report, the data submitted in response to the questions in the proposed rule, and data requested orally from companies and noted in the rulemaking docket (Docket No. 85-11), were sources used by the agency in developing a thorough analysis of this rulemaking. This analysis is part of the final regulatory evaluation prepared by the agency and can be found in the rulemaking docket of this rule (See, Final Regulatory Evaluation: Amendment Extending FMVSS 218, Motorcycle Helmets, to all Helmet Sizes, NHTSA, Plans and Policy, Office of Regulatory Analysis, July 1987.) A summary of the findings follows.

The agency has determined that there are some costs associated with this rule, since small motorcycle helmets (and any other size helmet that could not be "placed on" the size C headform) now will have to be certified as complying with FMVSS 218. The possible new costs will be in the areas of capital costs (purchase three or more new headforms, if the manufacturer does its own testing), design costs (possible redesign of liner for the small helmets, and possibly, though considered unlikely, redesign of a motorcycle shell), testing costs (ten percent of helmet production, *i.e.*, small helmets, which could not be places on the size C headform and previously were not subject to FMVSS 218 now will have to be tested and certified. In addition, some helmets will have to be tested on multiple test headforms if their sizing encompasses more than one headform size), and labeling costs (ten percent of helmet production will have to be labeled for the first time).

Thus, a manufacturer that intends to test its own motorcycle helmets for compliance with FMVSS 218 may have to purchase additional headforms, at a maximum estimated cost of about $4,670. In addition, a manufacturer who performs in-house compliance tests may wish to purchase the monorail drop test equipment, at an estimated cost of $17,000 (including instrumentation). Other one-time costs for manufacturers, whether or not they do in-house compliance testing, may include the redesign of noncomplying helmets. The agency anticipates that any necessary redesign will focus on liner redesign, at an estimated cost to the industry as a whole of approximately $60,000-$72,000. Although considered unlikely, there may be an instance of a manufacturer having to redesign a helmet shell. These potential costs could vary widely, with a possible cost of between $12,000 and $36,000 per shell for a redesign of a fiberglass shell and a possible cost of between $150,000-$182,000 per shell for a redesign of a polycarbonate shell.

The other costs associated with complying with amended FMVSS 218 will be recurring costs—affecting the cost of production. Certifying the additional 10 percent of the helmets now subject to the standard will cost about $.05 per helmet; multiple testing will add approximately $.03 per helmet; and the additional labeling costs will add about $.01 per helmet.

Costs to the Consumer. The accumulated estimate of these increases is estimated to be not more than $.10 per helmet. Since helmets can range in price from $33 to $300, the agency considers this increase inconsequential.

Benefits. The agency considers there to be clear benefits to this standard. The primary benefit—the extension of test requirements to all helmet sizes—is the principal reason for undertaking the rulemaking. FMVSS 218 will now apply to all helmets, and each helmet manufacturer will have to certify each helmet model as complying with the Standard before the helmet is offered for sale in the United States. In addition, to the extent there was consumer concern about the efficacy of any helmet on the market due to a lack of universal certification, applicability of the Standard to all helmets will eliminate this concern.

Consideration of Future Action

In the NPRM, the agency asked a series of questions concerning motorcycle helmet issues that may be considered in future rulemaking proceedings. These questions elicited information on potential new areas of motorcycle helmet performance, as well as data concerning performance requirements contained in other motorcycle helmet standards, such as in the American National Standards Institute and ECE standards. The solicited information covered such issues as a different configuration for the pointed penetration test striker, enlargement of the test area of the helmet, inclusion of a chin guard performance test for full facial coverage

helmets, as well as test procedure changes for the temperature conditioning requirements and dynamic testing for the retention test.

To the extent the agency received responses to these questions, they have been discussed previously, in the context of the specific issues of this rulemaking. However, the agency would like to reaffirm its interest in receiving specific data in these areas for possible future rulemaking actions. Commenters with information on these issues should refer back to the proposed rule for the specific questions on which the agency is seeking information. (See the September 27, 1985 issue of the **Federal Register**, at page 39147.) To be helpful to the agency in considering each topic, submissions must be specific, contain actual data on which the conclusions are based, and lay out test procedure specifications. If any submission is based on assumptions, please describe and justify the basis for each assumption.

Other Matters

Executive Order 12291 and DOT Regulatory Policies and Procedures. The agency has considered the economic and other effects of the requirements adopted in this final rule and determined that they are not major within the meaning of Executive Order 12291 nor significant within the meaning of DOT's regulatory policies and procedures. A Final Regulatory Evaluation has been prepared and placed in the public docket (Final Regulatory Evaluation: Amendment Extending FMVSS 218, *Motorcycle Helmets*, to All Helmet Sizes, NHTSA, Plans and Policy, Office of Regulatory Analysis, July 1987).

Environmental Policy Act. The agency has analyzed this final rule for purposes of the National Environmental Policy Act and has determined that this action will not have any significant impact on the quality of the human environment.

Regulatory Flexibility Act. NHTSA has considered the effects of this rulemaking action under the Regulatory Flexibility Act. I hereby certify that it will not have a significant economic impact on a substantial number of small entities. Accordingly, the agency has not prepared a full regulatory flexibility analysis.

As discussed previously, the result of analysis of costs and benefits was an agency determination that any costs associated with the rulemaking were minor.

Paperwork Reduction Act. The current certification requirements in Standard 218 are considered to be information collection requirements, as that term is defined by the Office of Management and Budget (OMB) in 5 CFR Part 1320 and have been assigned OMB Control Number 2127–0518. A request for approval for the certification requirements for the additional helmets made subject to Standard 218 as a result of this rulemaking have been submitted to the OMB for its approval, consistent with the requirements of the Paperwork Reduction Act (44 U.S.C. 3501 *et seq.).*

Semiannual Agenda. This document appears as item number 1939 in the Department's Semiannual Regulatory Agenda, published in the **Federal Register** on April 27, 1987 (52 FR 14548, 14653; RIN #2127–AA40).

List of Subjects in 49 CFR Part 571

Motor vehicle safety, Motorcycle helmets, Reporting and recordkeeping requirements.

In consideration of the foregoing, 49 CFR Part 571 is amended as follows:

PART 571—FEDERAL MOTOR VEHICLE SAFETY STANDARDS

1. The authority citation for Part 571 continues to read as follows:

Authority: 15 U.S.C. 1392, 1401, 1403, 1407; delegation of authority at 49 CFR 1.50.

§ 571.218 Standard No. 218; Motorcycle helmets.

2. S3. is revised to read as follows:

S3. *Application.* This standard applies to all helmets designed for use by motorcyclists and other motor vehicle users.

3. S4. is amended by placing all existing definitions in alphabetical order and by revising the definitions for "Reference headform," "Reference plane", and "Test headform" to read as follows:

S4. *Definitions.*

* * * * *

"Reference headform" means a measuring device contoured to the dimensions of one of the three headforms described in Table 2 and Figures 5 through 8 with surface markings indicating the locations of the basic, mid-sagittal, and reference planes, and the centers of the external ear openings.

"Reference plane" means a plane above and parallel to the basic plane on a reference headform or test headform (Figure 2) at the distance indicated in Table 2.

* * * * *

"Test headform" means a test device contoured to the dimensions of one of the three headforms described in Table 2 and Figures 5 through 8 with surface markings indicating the locations of the basic, mid-sagittal, and reference planes.

* * * * *

4. S5. is revised to read as follows:

S5. *Requirements.* Each helmet shall meet the requirements of S5.1, S5.2, and S5.3 when subjected to any conditioning procedure specified in S6.4, and tested in accordance with S7.1, S7.2, and S7.3.

5. Paragraph S5.3.1(b) is revised to read as follows:

* * * * *

(b) The adjustable portion of the retention system test device shall not move more than 1 inch (2.5 cm) measured between preliminary and test load positions.

6. S5.4 is revised to read as follows:

S5.4 *Configuration.* Each helmet shall have a protective surface of continuous contour at all points on or above the test line described in S6.2.3. The helmet shall provide peripheral vision clearance of at least 105° to each side of the mid-sagittal plane, when the helmet is adjusted as specified in S6.3. The vertex of these angles, shown in Figure 3, shall be at the point on the anterior surface of the reference headform at the intersection of the mid-sagittal and basic planes. The brow opening of the helmet shall be at least 1 inch (2.5 cm) above all points in the basic plane that are within the angles of peripheral vision (see Figure 3).

7. S5.5 is revised to read as follows:

S5.5 *Projections.* A helmet shall not have any rigid projections inside its shell. Rigid projections outside any helmet's shell shall be limited to those required for operation of essential accessories, and shall not protrude more than 0.20 inch (5 mm).

8. S5.6 is revised to read as follows:

S5. 6 *Labeling.*

S5.6.1 Each helmet shall be labeled permanently and legibly, in a manner such that the label(s) can be read easily without removing padding or any other permanent part, with the following:

(a) Manufacturer's name or identification.

(b) Precise model designation.

(c) Size.

(d) Month and year of manufacture. This may be spelled out (for example, June 1988), or expressed in numerals (for example, 6/88).

(e) The symbol DOT, constituting the manufacturer's certification that the helmet conforms to the applicable Federal motor vehicle safety standards. This symbol shall appear on the outer surface, in a color that contrasts with the background, in letters at least ⅜ inch (1 cm) high, centered laterally with the horizontal centerline of the symbol

located a minimum of 1⅛ inches (2.9 cm) and a maximum of 1⅜ inches (3.5 cm) from the bottom edge of the posterior portion of the helmet.

(f) Instructions to the purchaser as follows:

(1) "Shell and liner constructed of (identify type(s) of materials).

(2) "Helmet can be seriously damaged by some common substances without damage being visible to the user. Apply only the following: (Recommended cleaning agents, paints, adhesives, etc., as appropriate).

(3) "Make no modifications. Fasten helmet securely. If helmet experiences a severe blow, return it to the manufacturer for inspection, or destory it and replace it."

(4) Any additional relevant safety information should be applied at the time of purchase by means of an attached tag, brochure, or other suitable means.

9. S6. is revised to read as follows:

S6. *Preliminary test procedures.* Before subjecting a helmet to the testing sequence specified in S7., prepare it according to the procedures in S6.1, S6.2, and S6.3.

10. S6.3 is redesignated as S6.4; S6.2 is redesignated as S6.3; S6.1 is redesignated as S6.2 and a new S6.1 is added to read as follows:

S6.1 *Selection of appropriate headform.*

S6.1.1 A helmet with a manufacturer's designated discrete size or size range which does not exceed 6¾ (European size: 54) is tested on the small headform. A helmet with a manufacturer's designated discrete size or size range which exceeds 6¾, but does not exceed 7½ (European size: 60) is tested on the medium headform. A helmet with a manufacturer's designated discrete size or size range which exceeds 7½ is tested on the large headform.

S6.1.2 A helmet with a manufacturer's designated size range which includes sizes falling into two or all three size ranges described in S6.1.1 is tested on each headform specified for each size range.

11. Newly redesignated S6.2 is revised to read as follows:

S6.2 *Reference marking.*

S6.2.1 Use a reference headform that is firmly seated with the basic and reference planes horizontal. Place the complete helmet to be tested on the appropriate reference headform, as specified in S6.1.1 and S6.1.2.

S6.2.2 Apply a 10-pound (4.5 kg) static verticle load through the helmet's apex. Center the helmet laterally and seat it firmly on the reference headform according to its helmet positioning index.

S6.2.3 Maintaining the load and position described in S6.2.2, draw a line (hereinafter referred to as "test line") on the outer surface of the helmet coinciding with portions of the intersection of that service with the following planes, as shown in Figure 2:

(a) A plane 1 inch (2.5 cm) above and parallel to the reference plane in the anterior portion of the reference headform;

(b) A vertical transverse plane 2.5 inches (6.4 cm) behind the point on the anterior surface of the reference headform at the intersection of the mid-sagittal and reference planes;

(c) The reference plane of the reference headform;

(d) A vertical transverse plane 2.5 inches (6.4. cm) behind the center of the external ear opening in a side view; and

(e) A plane 1 inch (2.5 cm) below and parallel to the reference plane in the posterior portion of the reference headform.

12. Newly redesignated S6.3 is revised as follows:

S6.3 *Helmet positioning.*

S6.3.1 Before each test, fix the helmet on a test headform in the position that conforms to its helmet positioning index. Secure the helmet so that it does not shift position before impact or before application of force during testing.

S6.3.2 In testing as specified in S7.1 and S7.2, place the retention system in a position such that it does not interfere with free fall, impact or penetration.

13. Newly redesignated S6.4 is revised to read as follows:

S6.4 *Conditioning.*

S6.4.1 Immediately before conducting the testing sequence specified in S7, condition each test helmet in accordance with any one of the following procedures:

(a) *Ambient conditions.* Expose to a temperature of 70°F(21°C) and a relative humidity of 50 percent for 12 hours.

(b) *Low temperature.* Expose to a temperature of 14°F(−10°C) for 12 hours.

(c) *High temperature.* Expose to a temperature of 122°F(50°C) for 12 hours.

(d) *Water immersion.* Immerse in water at a temperature of 77°F(25°C) for 12 hours.

S6.4.2 If during testing, as specified in S7.1.3 and S7.2.3, a helmet is returned to the conditioning environment before the time out of that environment exceeds 4 minutes, the helmet is kept in the environment for a minimum of 3 minutes before resumption of testing with that helmet. If the time out of the environment exceeds 4 minutes, the helmet is returned to the environment for a minimum of 3 minutes for each minute or portion of a minute that the helmet remained out of the environment in excess of 4 minutes or for a maximum of 12 hours, whichever is less, before the resumption of testing with that helmet.

14. S7.1 is revised to read as follows:

S7.1.1 Impact attenuation is measured by determining acceleration imparted to an instrumented test headform on which a complete helmet is mounted as specified in S6.3, when it is dropped in guided free fall upon a fixed hemispherical anvil and a fixed flat steel anvil.

S7.1.2 Each helmet is impacted at four sites with two successive identical impacts at each site. Two of these sites are impacted upon a flat steel anvil and two upon a hemispherical steel anvil as specified in S7.1.10 and S7.1.11. The impact sites are at any point on the area above the test line described in paragraph S6.2.3, and separated by a distance not less than one-sixth of the maximum circumference of the helmet in the test area.

S7.1.3 Impact testing at each of the four sites, as specified in S7.1.2, shall start at two minutes, and be completed by four minutes, after removal of the helmet from the conditioning environment.

S7.1.4 (a) The guided free fall drop height for the helmet and test headform combination onto the hemispherical anvil shall be such that the minimum impact speed is 17.1 feet/second (5.2 m/sec). The minimum drop height is 54.5 inches (138.4 cm). The drop height is adjusted upward from the minimum to the extent necessary to compensate for friction losses.

(b) The guided free fall drop height for the helmet and test headform combination onto the flat anvil shall be such that the minimum impact speed is 19.7 ft./sec (6.0 m/sec). The minimum drop height is 72 inches (182.9 cm). The drop height is adjusted upward from the minimum to the extent necessary to compensate for friction losses.

S7.1.5 Test headforms for impact attenuation testing are constructed of magnesium alloy (K–1A), and exhibit no resonant frequencies below 2,000 Hz.

S7.1.6 The monorail drop test system is used for impact attenuation testing.

S7.1.7 The weight of the drop assembly, as specified in Table 1, is the combined weight of the test headform and the supporting assembly for the drop test. The weight of the supporting assembly is not less than 2.0 lbs. and not more than 2.4 lbs. (0.9 to 1.1 kg). The supporting assembly weight for the monorail system is the drop assembly weight minus the combined weight of the test headform, the headform's clamp down ring, and its tie down screws.

S7.1.8 The center of gravity of the test headform is located at the center of the mounting ball on the supporting assembly and lies within a cone with its axis vertical and forming a 10° included angle with the vertex at the point of impact. The center of gravity of the drop assembly lies within the rectangular volume bounded by x = −0.25 inch (−0.64 cm), x = 0.85 inch (2.16 cm), y = 0.25 inch (0.64 cm), and y = −0.25 inch (−0.64 cm) with the origin located at the center of gravity of the test headform. The rectangular volume has no boundary along the z-axis. The x-y-z axes are mutually perpendicular and have positive or negative designations in accordance with the right-hand rule (See Figure 5). The origin of the coordinate axes also is located at the center of the mounting ball on the supporting assembly (See Figures 6, 7, and 8). The x-y-z axes of the test headform assembly on a monorail drop test equipment are oriented as follows: From the origin, the x-axis is horizontal with its positive direction going toward and passing through the vertical centerline of the monorail. The positive z-axis is downward. The y-axis also is horizontal and its direction can be decided by the z- and x-axes, using the right-hand rule.

S7.1.9 The acceleration transducer is mounted at the center of gravity of the test headform with the sensitive axis aligned to within 5° of vertical when the test headform assembly is in the impact position. The acceleration data channel complies with SAE Recommended Practice J211 JUN 80, Instrumentation for Impact Tests, requirements for channel class 1,000.

S7.1.10 The flat anvil is constructed of steel with a 5-inch (12.7 cm) minimum diameter impact face, and the hemispherical anvil is constructed of steel with a 1.9 inch (4.8 cm) radius impact face.

S7.1.11 The rigid mount for both of the anvils consists of a solid mass of at least 300 pounds (136.1 kg), the outer surface of which consists of a steel plate with minimum thickness of 1 inch (2.5 cm) and minimum surface area of 1 ft ^{2} (929 cm ^{2}).

S7.1.12 The drop system restricts side movement during the impact attenuation test so that the sum of the areas bounded by the acceleration-time response curves for both the x- and y-axes (horizontal axes) is less than five percent of the area bounded by the acceleration-time response curve for the vertical axis.

15. S7.2 is revised as set forth below:

S7.2 *Penetration test.*

S7.2.1 The penetration test is conducted by dropping the penetration test striker in guided free fall, with its axis aligned vertically, onto the outer surface of the complete helmet, when mounted as specified in S6.3, at any point above the test line, described in S6.2.3, except on a fastener or other rigid projection.

S7.2.2 Two penetration blows are applied at least 3 inches (7.6 cm) apart, and at least 3 inches (7.6 cm) from the centers of any impacts applied during the impact attenuation test.

S7.2.3 The application of the two penetration blows, specified in S7.2.2, starts at two minutes and is completed by four minutes, after removal of the helmet from the conditioning environment.

S7.2.4 The height of the guided free fall is 118.1 inches (3 m), as measured from the striker point to the impact point on the outer surface of the test helmet.

S7.2.5 The contactable surface of the penetration test headform is constructed of a metal or metallic alloy having a Brinell hardness number no greater than 55, which will permit ready detection should contact by the striker occur. The surface is refinished if necessary before each penetration test blow to permit detection of contact by the striker.

S7.2.6 The weight of the penetration striker is 6 pounds, 10 ounces (3 kg).

S7.2.7 The point of the striker has an included angle of 60°, a cone height of 1.5 inches (3.8 cm), a tip radius of 0.02 inch (standard 0.5 millimeter radius) and a minimum hardness of 60 Rockwell, C-scale.

S7.2.8 The rigid mount for the penetration test headform is as described in S7.1.11.

16. S7.3 is revised to read as follows:

S7.3 *Retention system test.*

S7.3.1 The retention system test is conducted by applying a static tensile load to the retention assembly of a complete helmet, which is mounted, as described in S6.3, on a stationary test headform as shown in Figure 4, and by measuring the movement of the adjustable portion of the retention system test device under tension.

S7.3.2 The retention system test device consists of both an adjustable loading mechanism by which a static tensile load is applied to the helmet retention assembly and a means for holding the test headform and helmet stationary. The retention assembly is fastened around two freely moving rollers, both of which have a 0.5 inch (1.3 cm) diameter and a 3-inch (7.6 cm) center-to-center separation, and which are mounted on the adjustable portion of the tensile loading device (Figure 4). The helmet is fixed on the test headform as necessary to ensure that it does not move during the application of the test loads to the retention assembly.

S7.3.3 A 50–pound (22.7 kg) preliminary test load is applied to the retention assembly, normal to the basic plane of the test headform and symmetrical with respect to the center of the retention assembly for 30 seconds, and the maximum distance from the extremity of the adjustable portion of the retention system test device to the apex of the helmet is measured.

S7.3.4 An additional 250–pound (113.4 kg) test load is applied to the retention assembly, in the same manner and at the same location as described in S7.3.3, for 120 seconds, and the maximum distance from the extremity of the adjustable portion of the retention system test device to the apex of the helmet is measured.

17. Section 571.218 is further amended as follows:

a. The Appendix is removed.

b. Figures 1, 2, 3 and 4 and Table 1 are designated "Appendix to § 571.218". Table 1 is moved to appear before Figure 1.

c. Table 1, Figure 2 are revised and Figure 5, Table 2, and Figures 6, 7, and 8 are added.

Appendix to § 571.218

TABLE 1.—WEIGHTS FOR IMPACT ATTENUATION TEST DROP ASSEMBLY

Test headform size	Weight [1]—1b(kg)
Small	7.8 (3.5 kg).
Medium	11.0 (5.0 kg).
Large	13.4 (6.1 kg).

[1] Combined weight of instrumented test headform and supporting assembly for drop test.

* * * * *

BILLING CODE 4910-59-M

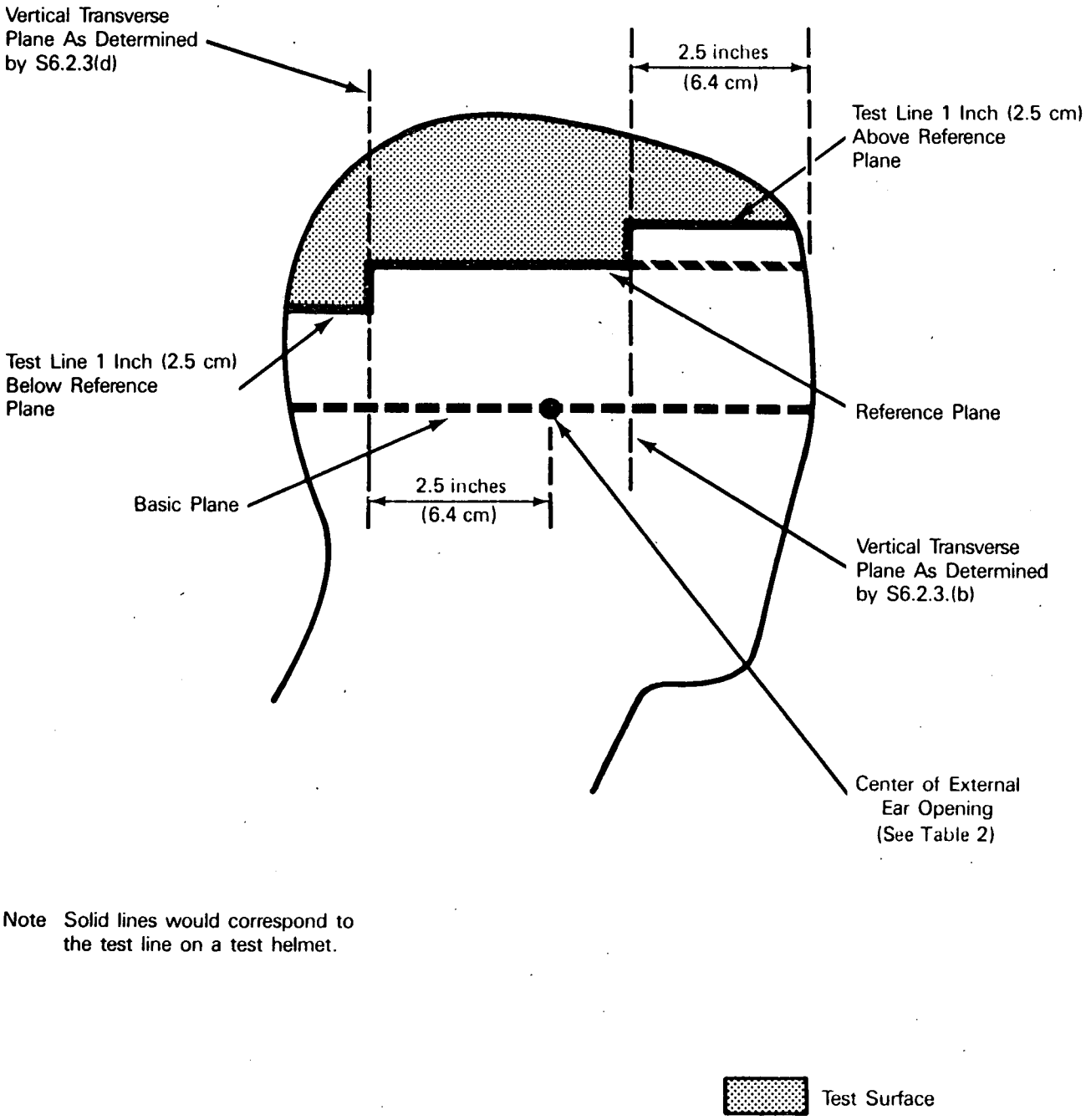

Note Solid lines would correspond to the test line on a test helmet.

Figure 2

Figure 5

HEADFORM SECTIONS

Mid-Sagittal Plane (Symmetrical Plane)

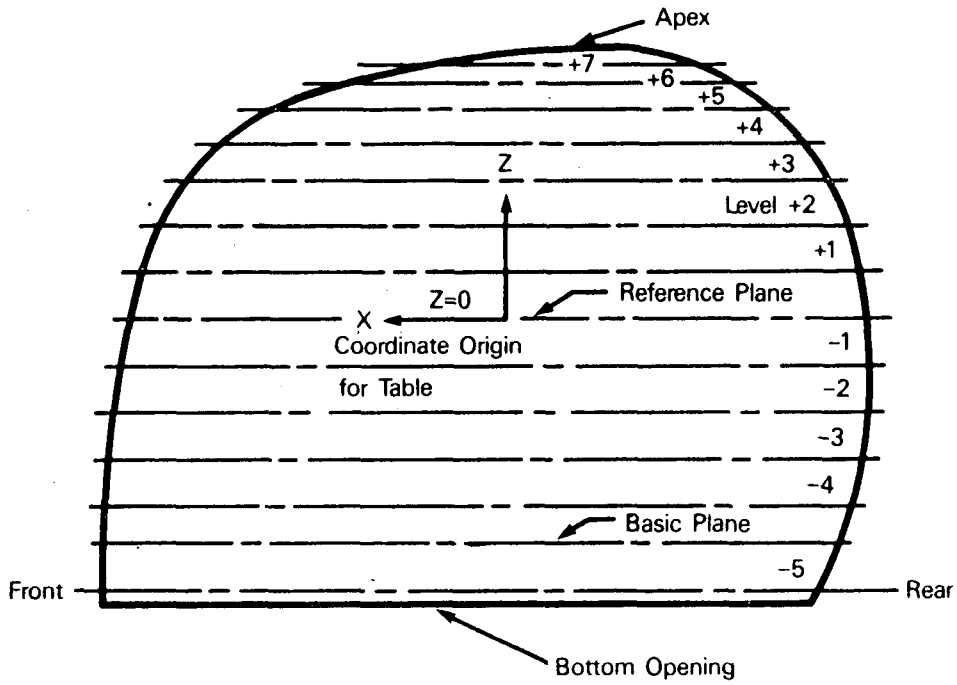

Headform Coordinate Systems
(Right-hand Rule)

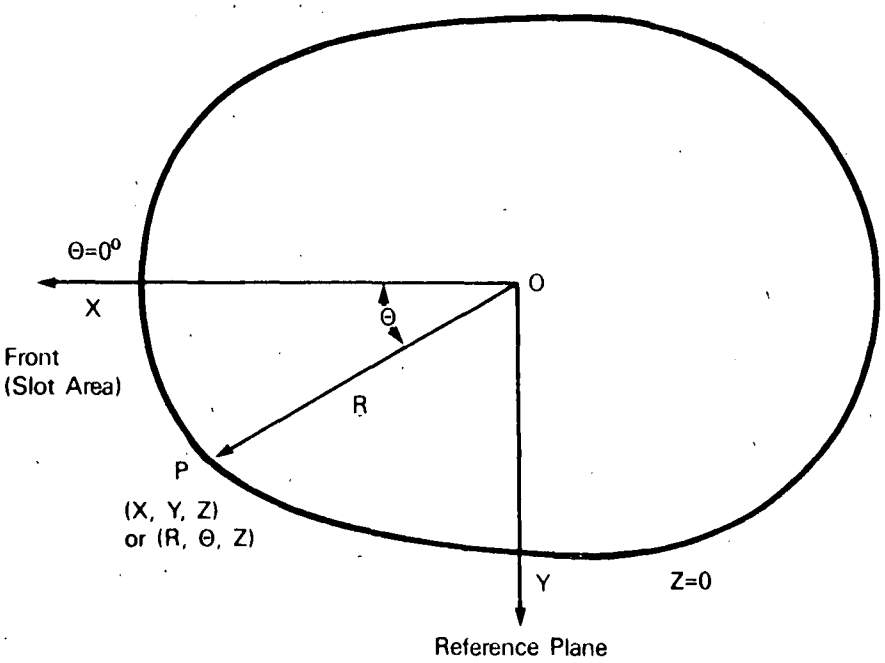

Table 2

Medium Headform — Exterior Dimensions (Continued)

Θ	Level +5 Z=2.250			Level +6 Z=2.560		
	R	X	Y	R	X	Y
0	2.526	2.526	0	1.798	1.798	0
10	2.521	2.483	0.483	1.798	1.771	0.312
20	2.464	2.315	0.843	1.757	1.651	0.601
30	2.387	2.067	1.194	1.719	1.489	0.860
40	2.305	1.766	1.482	1.678	1.285	1.079
50	2.232	1.435	1.710	1.652	1.062	1.266
60	2.174	1.087	1.883	1.641	0.821	1.421
70	2.144	0.733	2.015	1 645	0.563	1.546
80	2.132	0.370	2.100	1.673	0.291	1.648
90	2.147	0	2.147	1.712	0	1.712
100	2.213	-0.384	2.179	1.809	-0.314	1.782
110	2.316	-0.792	2.176	1.925	-0.658	1.809
120	2.463	-1.232	2.133	2.066	-1.033	1.789
130	2.624	-1.687	2.010	2.213	-1.423	1.695
140	2.763	-2.117	1.776	2.358	-1.806	1.516
150	2.863	-2.479	1.432	2.469	-2.138	1.235
160	2.919	-2.743	0.988	2.536	-2.383	0.867
170	2.954	-2.909	0.513	2.561	-2.522	0.445
180	2.958	-2.958	0	2.556	-2.556	0

Θ	Level +7 Z=2.750		
	R	X	Y
0	1.081	1.081	0
10	1.088	1.072	0.189
20	1.055	0.991	0.361
30	1.039	0.900	0.520
40	1.039	0.796	0.668
50	1.052	0.676	0.806
60	1.068	0.534	0.925
70	1.106	0.378	1.039
80	1.171	0.203	1.153
90	1.242	0	1.242
100	1.422	-0.247	1.400
110	1.489	-0.509	1.399
120	1.683	-0.842	1.458
130	1.801	-1.158	1.380
140	1.954	-1.497	1.256
150	2.083	-1.804	1.042
160	2.138	-2.009	0.731
170	2.175	-2.142	0.378
180	2.175	-2.175	0

Notes:

1. Apex is located at (-0.75, 0, 3.02) for (X,Y,Z) or (0.75, 180, 3.02) for (R, Θ, Z).
2. Center of ear opening is located at (0.40, 2.78, -2.36) for (X,Y,Z) or (2.80, 81.8, -2.36) for (R,Θ,Z).
3. Scale all dimensions by 0.8941 for small headform.
4. Scale all dimensions by 1.069 for large headform.
5. Headform is symmetrical about the mid-sagittal plane.
6. Units:
   R,X,Y,Z — inches.
   Θ — degrees.
7. To obtain metric equivalents in centimeters, multiply each figure by 2.54.

Figure 6

Small Headform – Interior Design

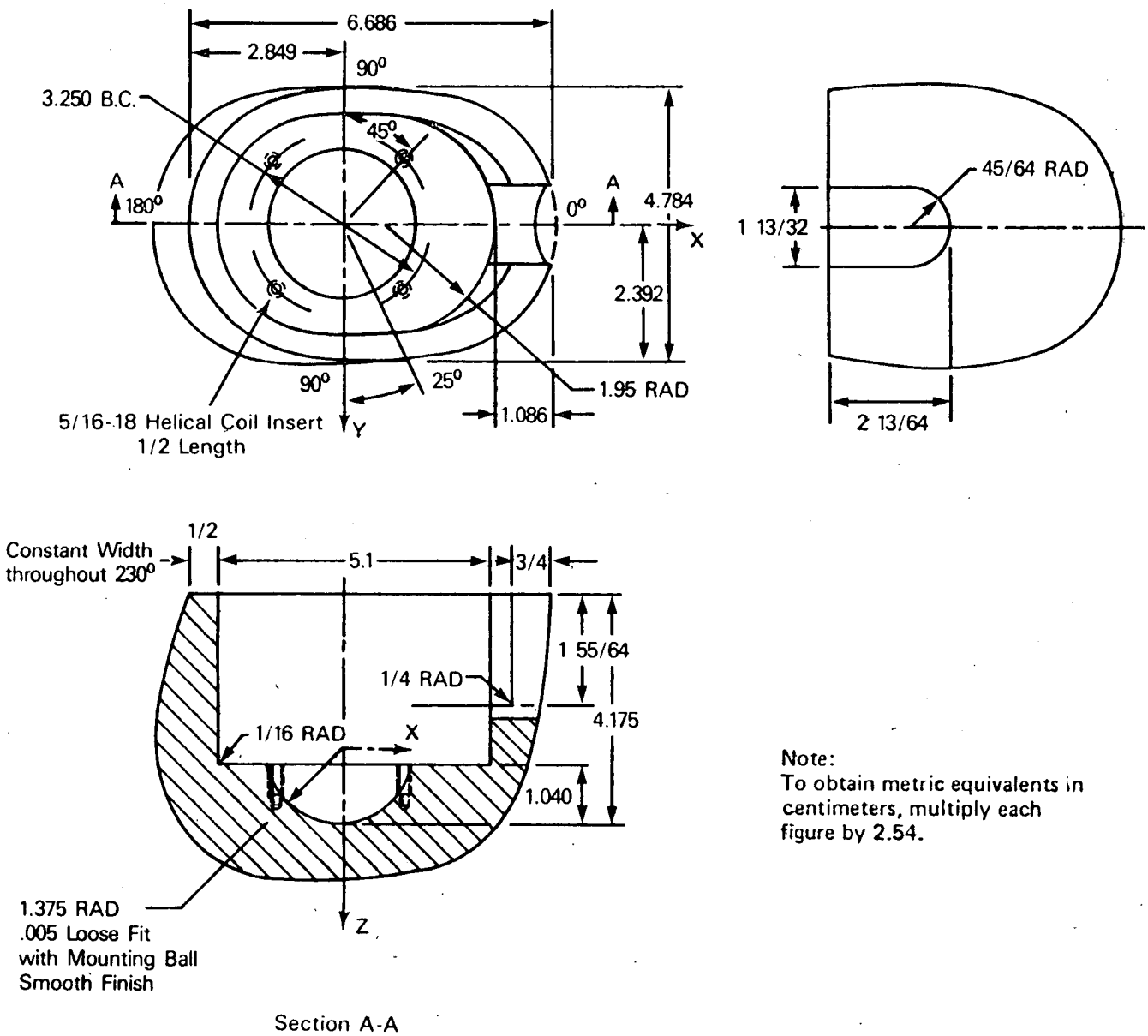

Note:
To obtain metric equivalents in centimeters, multiply each figure by 2.54.

Figure 7

Medium Headform – Interior Design

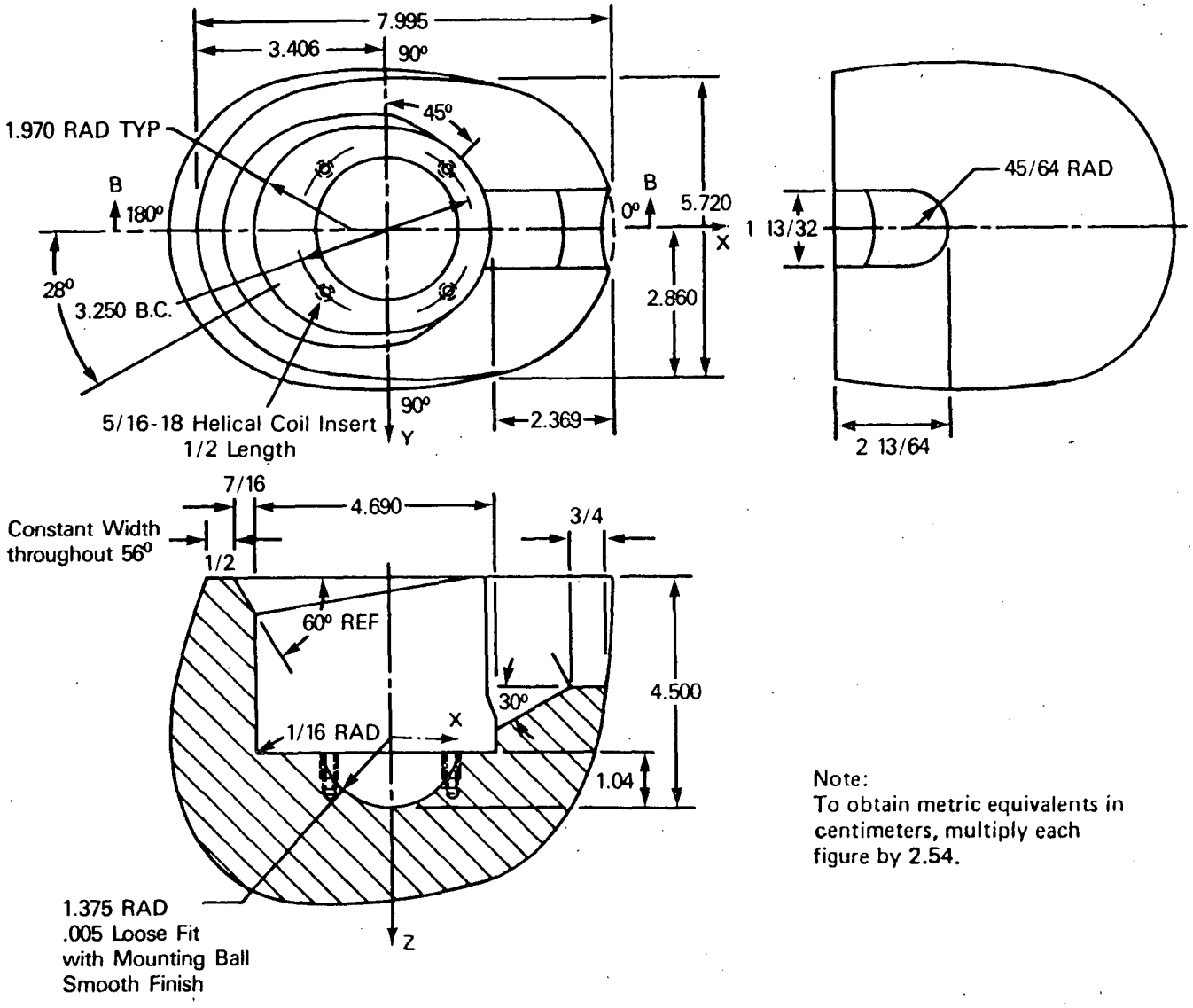

Note:
To obtain metric equivalents in centimeters, multiply each figure by 2.54.

Figure 8

Large Headform – Interior Design

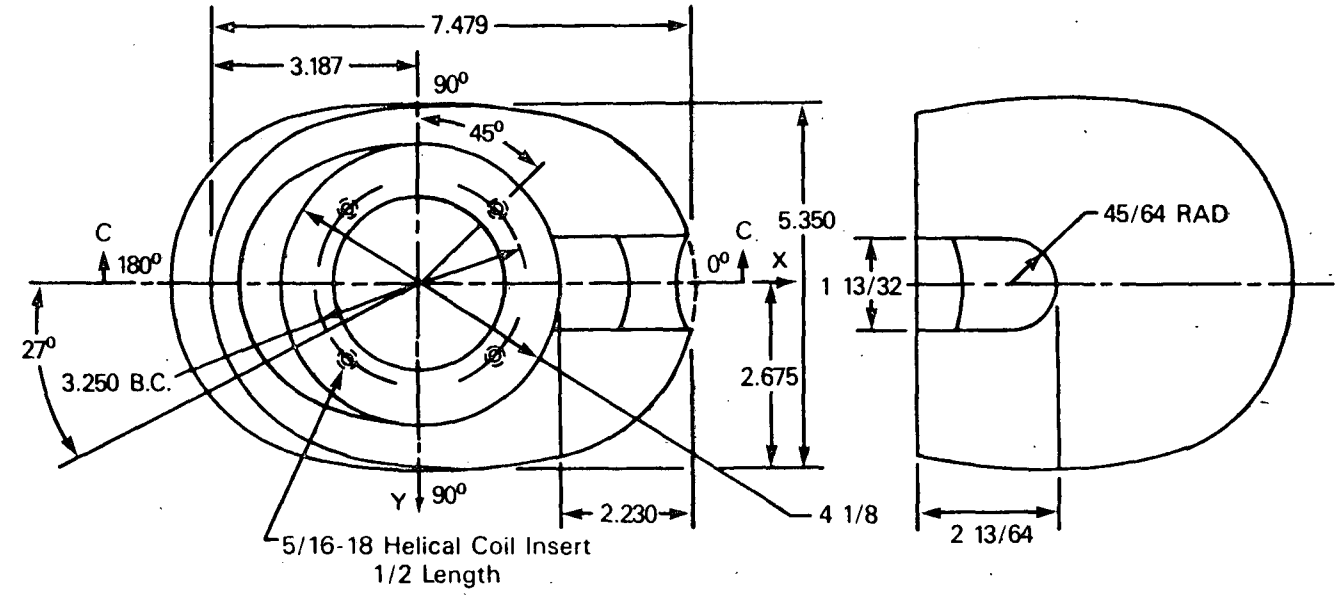

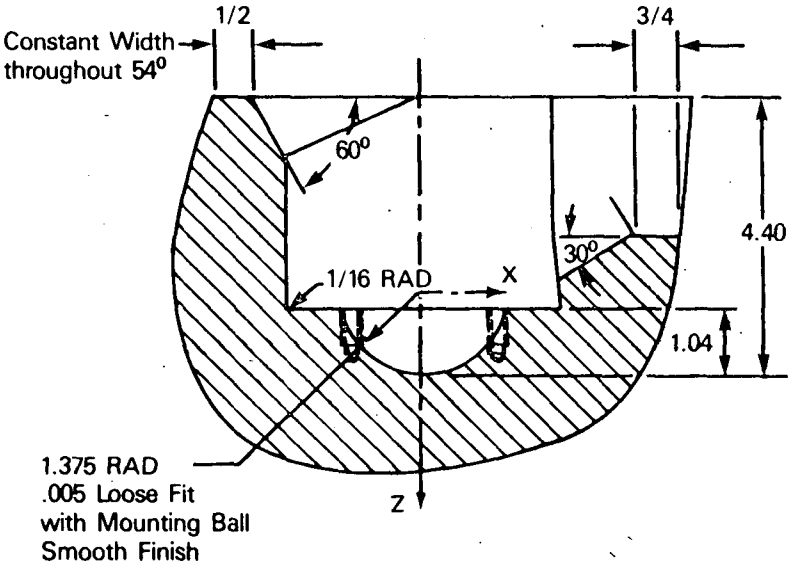

Section C-C

Note:
To obtain metric equivalents in centimeters, multiply each figure by 2.54.

BILLING CODE 4910-59-C

Issued on March 31, 1988.

Diane K. Steed,

Administrator.

[FR Doc. 88-7395 Filed 4-5-88; 8:45 am]

BILLING CODE 4910-59-M

DEPARTMENT OF COMMERCE

National Oceanic and Atmospheric Administration

50 CFR Part 672

[Docket No. 80112-8057]

Groundfish of the Gulf of Alaska

AGENCY: National Marine Fisheries Service (NMFS), NOAA, Commerce.

ACTION: Final rule.

SUMMARY: NOAA issues a final rule to implement an area registeration program beginning in 1988, which requires operators of hook-and-line vessels to notify the Director, Alaska Region, NMFS (Regional Director), before fishing for groundfish in any area or district which is open to directed fishing for sablefish with hook-and-line gear. This requirement is necessary to allow the Regional Director to estimate fishing effort to avoid exceeding the hook-and-line sablefish harvest quota. This action is intended as a conservation and management measure that will prevent the overharvest of sablefish and promote orderly fishing while providing for full utilization of the sable fish resource.

EFFECTIVE DATE: April 1, 1988.

ADDRESS: Copies of the documents supporting this rule may be obtained from Robert W. McVey, Director, National Marine Fisheries Service, P.O. Box 21668, Juneau, AK 99802-1668.

FOR FURTHER INFORMATION CONTACT: Ronald J. Berg (Fishery Biologist, NMFS), 907-586-7230.

SUPPLEMENTARY INFORMATION:

Background

The domestic and foreign groundfish fisheries in the exclusive economic zone (3-200 miles offshore) of the Gulf of Alaska are managed under the Fishery Management Plan for Groundfish of the Gulf of Alaska (FMP). The FMP was developed by the North Pacific Fishery Management Council (Council) under the Magnuson Fishery Conservation and Management Act (Magnuson Act) and is implemented by regulations of 50 CFR 611.92 for foreign fishing and Part 672 for domestic fishing.

This final rule implements an area registration program beginning in 1988, that requires operators of hook-and-line vessels to notify the Director, Alaska Region, NMFS (Regional Director), before fishing for groundfish in the following regulatory areas or districts which are open to directed fishing for sablefish with hook-and-line gear: (1) Western Regulatory Area, (2) Central Regulatory Area, (3) West Yakutat District of the Eastern Regulatory Area, and (4) Southeast Outside/East Yakutat Districts (combined) of the Eastern Regulatory Area.

Total allowable catches (TACs) of sablefish are established for the (1) Southeast Outside/East Yakutat Districts and (2) West Yakutat District of the Eastern Regulatory Area, and for the (3) Central and (4) Western Regulatory Areas in the Gulf of Alaska. Shares and the TACS are assigned as quotas to hook-and-line gear (53 FR 890, January 14, 1988). Large numbers of vessels using hook-and-line gear are expected to participate in the fishery in 1988 and subsequent years. The potential for hook-and-line vessels exceeding harvest quotas in any of the above management areas is high.

Information on the number of hook-and-line vessels that are fishing for sablefish is needed by the Regional Director for making projections about dates when the sablefish quota assigned to hook-and-line gear will be reached. All groundfish fishermen who are using hook-and-line gear and who are regulated under 50 CFR Part 672 must register before fishing for groundfish in any of the specified regulatory areas or districts in the Gulf of Alaska that are open to directed fishing for sablefish with hook-and-line gear. This means fishermen will be required to register each time they begin fishing in a different specified area. Fishermen may only maintain their registration in one area at any one time.

Fishermen who are fishing with hook-and-line gear for other groundfish species, such as rockfish and Pacific cod, must also register if they are fishing in areas open to directed fishing for sablefish with hook-and-line gear. Imposition of area registration on all hook-and-line fishermen during the sablefish directed fishing season is necessary to facilitate enforcement of area registration. Otherwise, no practical means exist to differentiate whether a hook-and-line fisherman is fishing for sablefish or some other species of groundfish.

A rule to implement this program was proposed in the **Federal Register** (53 FR 8789, March 17, 1988). Public comments were invited until March 29, 1988. No comments were received.

The area registration program is designed to minimize burdens on fishermen. Vessel operators must register by calling (a) one of the following numbers during business hours, 8:00 a.m. to 4:30 p.m., local time, Monday through Friday; or between the hours of 8:00 a.m. to 12:00 noon and 1:00 to 4:30 p.m., local time, Saturday and Sunday: Juneau, Alaska—Fishery Management Division, 706 West Ninth Street, toll-free telephone, in Alaska 1-800-478-7644, outside Alaska 1-800-334-7865; or (b) one of the following numbers during business hours, 8:00 a.m. to 4:30 p.m., local time, Monday through Friday: Kodiak, Alaska, Enforcement Division, 1211 Gibson Cover Road, telephone 907-486-3298; Sitka, Alaska, Enforcement Division, Post Office Building, telephone 907-774-6940.

The only information that the Regional Director requires for area registration is the name of the person who is registering, the vessel's Federal Gulf of Alaska groundfish permit number, the reguatory area or regulatory district being registered for, and the date the vessel will start fishing.

Public Comments

No comments were received.

Changes From the Proposed Rule in the Final Rule

The regulatory text in § 672.6(a) of this final rule lists the specific areas and districts that are open to directed fishing for sablefish with hook-and-line gear as of April 1 and require registration by hook-and-line fishermen before fishing for groundfish. This is a further clarification of the original intent of the Council that the registration program includes areas and districts in the Gulf of Alaska that have separate quotas for hook-and-line fishing for sablefish.

Classification

The Assistant Administrator for Fisheries, NOAA, has determined that this rule is necessary for the conservation and management of the sablefish fishery in the Gulf of Alaska and that it is consistent with the Magnuson Act and other applicable law.

The Alaska Region, National Marine Fisheries Service, prepared an environmental assessment/regulatory impact review (EA/RIR) for this rule. The Assistant Administrator for Fisheries concluded that no significant impact on the environment will occur as a result of this rule. You may obtain a copy of the EA/RIR from the Regional Director at the address above.

The Acting Under Secretary, NOAA, determined that this rule is not a "major rule" requiring a regulatory impact analysis under Executive Order 12291.

This determination is based on the socioeconomic impacts discussed in the EA/RIR. A program for area registration is superior to other alternatives considered. Since NMFS conducted an area registration program during the 1987 hook-and-line fishery, NMFS considers costs incurred in that program to be representative of those that will occur in future years. The analysis was summarized in the Classification section of the proposed rule.

The General Counsel of the Department of Commerce certified to the Small Business Administration that this rule will not have a significant economic impact on a substantial number of small entities. As a result, a regulatory flexibility analysis was not prepared.

This rule contains a collection of information requirement subject to the Paperwork Reduction Act. The Office of Management and Budget has approved this collection under OMB Control Number 0648-0182.

NOAA has determined that this rule will be implemented in a manner that is consistent to the maximum extent practicable with the approved coastal zone management program of the State of Alaska. This determination has been submitted for review by the responsible State agencies under section 307 of the Coastal Zone Management Act.

The Acting Under Secretary has determined that immediate implementation of this final rule is necessary to provide the Regional Director information on numbers of vessels participating in the fishery and thus allow effective management of this fishery. The directed hook and line fishery for sablefish opens April 1. Last year, in certain Districts of the Gulf of Alaska, the fishery was over in nine days. Due to increased effort in the fishery, 1988 openings may be even shorter in some districts than in 1987. As this rule must take effect immediately in order to provide the Regional Director with timely information on amount and distribution of vessel effort, to avoid overharvest of the resource, the agency finds good cause to waive delayed effectiveness of this rule under 5 U.S.C. 553(d)(3).

This rule does not contain policies with federalism implications sufficient to warrant preparation of a federalism assessment under Executive Order 12612.

List of Subjects in 50 CFR Part 672

Fisheries.

Dated: April 1, 1988.

James E. Douglas, Jr.,

Deputy Assistant Administrator For Fisheries, National Marine Fisheries Service.

For the reasons set out in the preamble, Part 672 is amended as follows:

PART 672—GROUNDFISH OF THE GULF OF ALASKA

1. The authority citation for Part 672 continues to read as follows:

Authority: 16 U.S.C. 1801 *et seq.*

2. For reasons given in the preamble, a new § 672.6 is added to read as follows:

§ 672.6 Area registration.

(a) *General.* The operator of any fishing vessel regulated under this part must register that vessel with the Regional Director and be issued a registration number before fishing for groundfish with hook-and-line gear in any of the following Areas or Districts, as defined at § 672.2 of this part, that are open to directed fishing for sablefish with hook-and-line gear:

(1) Western Regulatory Area

(2) Central Regulatory Area,

(3) West Yakutat District of the Eastern Regulatory Area, and

(4) Southeast Outside-East Ysakutat Districts (combined) of the Eastern Regulatory Area.

(b) *Information required for area registration.* For each registration, registrants must select only one regulatory area or regulatory district and provide the following information:

(1) The name of the vessel operator;

(2) The name of the vessel;

(3) The vessel's Federal Gulf of Alaska groundfish permit number;

(4) The date the vessel will begin fishing for groundfish in the selected regulatory area or regulatory district with hook-and-line gear; and

(5) The regulatory area or regulatory district in which such hook-and-line fishing will take place.

(c) *Limitations.* (1) Any registration under this section will have the effect cf canceling any previous registration as of the date specified under paragraph (b)(4) of this section.

(2) The information required by paragraph (b) of this section must be submitted at:

(i) One of the following three NMFS locations in person or by telephone at one of the following numbers during business hours, 8:00 a.m. to 4:30 p.m., local time, Monday through Friday:

Fishery Management Division, National Marine Fisheries Service, 709 W. 9th Street, Juneau, Alaska, Toll-free telephone (In Alaska) 1-800-478-7644, (Outside Alaska) 1-800-334-7865

Enforcement Division, National Marine Fisheries Service, 1211 Gibson Cove Road, Kodiak, Alaska, Telephone 907-486-3298

Enforcement Division, National Marine Fisheries Service, Post Office Building, Sitka, Alaska, Telephone 907-747-6940

(ii) at one of the following numbers between the hours of 8:00 a.m. to 12:00 noon, and 1:00 p.m. to 4:30 p.m., local time, Saturday and Sunday:

Fishery Management Division, National Marine Fisheries Service, Juneau, Alaska, Toll-free telephone (In Alaska) 1-800-478-7644, (Outside Alaska) 1-800-334-7865

(3) It is unlawful for any person to fish for groundfish from a vessel regulated under this part with hook-and-line gear in any regulatory area or regulatory district, which is open to directed fishing for sablefish with hook-and-line gear, unless that vessel has been registered in accordance with this section and is in receipt of a registration number.

[FR Doc. 88-7487 Filed 4-1-88; 2:42 pm]

BILLING CODE 3510-22-M

Proposed Rules

Federal Register
Vol. 53, No. 66
Wednesday, April 6, 1988

This section of the FEDERAL REGISTER contains notices to the public of the proposed issuance of rules and regulations. The purpose of these notices is to give interested persons an opportunity to participate in the rule making prior to the adoption of the final rules.

DEPARTMENT OF AGRICULTURE

Federal Crop Insurance Corporation

7 CFR Part 449

[Amdt. No. 2; Doc. No. 5242S]

Fresh Market Sweet Corn Crop Insurance Regulations

AGENCY: Federal Crop Insurance Corporation, USDA.

ACTION: Proposed rule.

SUMMARY: The Federal Crop Insurance Corporation (FCIC) proposes to amend the Fresh Market Sweet Corn Crop Insurance Regulations (7 CFR Part 449, effective for the 1989 crop year only, by extending the date for filing contract changes specified in the policy for insuring fresh market sweet corn. The intended effect of this rule is to: (1) Allow additional time for FCIC to complete studies of this program prior to issuing the provisions of crop insurance protection on fresh market sweet corn as an endorsement to the general crop insurance policy which contains the standard terms and conditions common to most crops; and, (2) adapt the provisions to the needs of approved additional counties.

DATE: Written comments, data, and opinions on this proposed rule must be submitted not later than May 6, 1988.

ADDRESS: Written comments on this proposed rule should be sent to Peter F. Cole, Office of the Manager, Federal Crop Insurance Corporation, Room 4090, South Building, U.S. Department of Agriculture, Washington, DC 20250.

FOR FURTHER INFORMATION CONTACT: Peter F. Cole, Secretary, Federal Crop Insurance Corporation, U.S. Department of Agriculture, Washington, DC 20250, telephone (202) 447-3325.

SUPPLEMENTARY INFORMATION: This action has been reviewed under USDA procedures established by Departmental Regulation 1512-1. This action does not constitute a review as to the need, currency, clarity, and effectiveness of these regulations under those procedures. The sunset review date established for these regulations remains at December 1, 1990.

John Marshall, Manager, FCIC, (1) has determined that this action is not a major rule as defined by Executive Order 12291 because it will not result in: (a) An annual effect on the economy of $100 million or more; (b) major increases in costs or prices for consumers, individual industries, federal, State, or local governments, or a geographical region; or (c) significant adverse effects on competition, employment, investment, productivity, innovation, or the ability of U.S.-based enterprises to compete with foreign-based enterprises in domestic or export markets; and (2) certifies that this action will not increase the federal paperwork burden for individuals, small businesses, and other persons.

This action is exempt from the provisions of the Regulatory Flexibility Act; therefore, no Regulatory Flexibility Analysis was prepared.

This program is listed in the Catalog of Federal Domestic Assistance under No. 10.450.

This program is not subject to the provisions of Executive Order 12372 which requires intergovernmental consultation with State and local officials. See the Notice related to 7 CFR Part 3015, Subpart V, published at 48 FR 29115, June 24, 1983.

This action is not expected to have any significant impact on the quality of the human environment, health, and safety. Therefore, neither an Environmental Assessment nor an Environmental Impact Statement is needed.

Section 16 of the policy for insuring fresh market sweet corn (7 CFR Part 449) provides that any changes in the contract must be placed on file in the service office by April 30. The contract consists of the application, the policy, and the actuarial table. FCIC is reviewing the fresh market sweet corn crop insurance regulations (7 CFR Part 449), with a view toward making necessary changes in the policy for insurance according to the needs of approved additional counties, and issuing the program as an endorsement to the General Crop Insurance Policy (7 CFR Part 401), beginning with the 1989 crop year.

In order to allow time for completion of this review and the transition of the program to an endorsement format, FCIC has determined that the date by which such changes are required to be placed on file in the service office shall be extended from April 30, 1988 to May 31, 1988, and made effective for the 1989 crop year only for Fresh Market Sweet Corn.

FCIC is soliciting public comment on this proposed rule for 30 days after publication in the **Federal Register**. Written comments on this proposed rule should be sent to the Office of the Manager, Room 4090, South Building, U.S. Department of Agriculture, Washington, DC 20250.

Any written comments received pursuant to this rule will be available for public inspection in the Office of the Manager, Room 4090, South Building, U.S. Department of Agriculture, Washington, DC 20250, during regular business hours, Monday through Friday.

List of Subjects in 7 CFR Part 449

Crop insurance, Fresh market sweet corn.

Proposed Rule

Accordingly, pursuant to the authority contained in the Federal Crop Insurance Act, as amended (7 U.S.C. 1501 *et seq.*), the Federal Crop Insurance Corporation proposes to amend the Fresh Market Sweet Corn Crop Insurance Regulations (7 CFR Part 449), proposed to be effective for the 1989 calendar year only in the following instances:

PART 449—[AMENDED]

1. The authority citation for 7 CFR Part 449, continues to read as follows:

Authority: Secs. 506, 516, Pub. L. 75-430, 52 Stat. 73, 77, as amended (7 U.S.C. 1506, 1516).

2. 7 CFR 449.7(d)16 is revised to read as follows:

§ 449.7 Application and policy.

* * * * *

(d) * * *

16. Contract changes.

We may change any terms and provisions of the contract from year to year. If your amount of insurance at which indemnities are computed is no longer offered, the actuarial table will provide the amount of insurance which you are deemed to have elected. All contract changes will be available at your service office by April 30 (May 31, effective for the 1989 crop year only), preceding the cancellation date. Acceptance of any change

will be conclusively presumed in the absence of notice from you to cancel the contract.

Done in Washington, DC on March 30, 1988.

Peter F. Cole,

Acting Manager, Federal Crop Insurance Corporation.

[FR Doc. 88-7540 Filed 4-5-88; 8:45 am]

BILLING CODE 3410-08-M

DEPARTMENT OF JUSTICE

Immigration and Naturalization Service

8 CFR Parts 3, 208, 236, 242, and 253

[Atty. Gen. Order No. 1267-88]

Aliens and Nationality; Asylum and Withholding of Deportation Procedures

AGENCY: Immigration and Naturalization Service, Justice.

ACTION: Revised proposed rule.

SUMMARY: This revised proposed rule amends the procedures to be used in determining asylum under section 208 and withholding of deportation under section 243(h) of the Immigration and Nationality Act, as amended by the Refugee Act of 1980. The rule modifies the proposed rule published on August 28, 1987 (52 FR 32552) and the interim rule published on June 2, 1980 (45 FR 37392). This modification is in response to numerous and diverse comments received on the proposed rule, in particular a substantial number objecting to the original proposal to require that all asylum and withholding of deportation claims be adjudicated in a nonadversarial setting by Asylum Officers within the INS. The revised proposed rule provides for continued adversarial adjudications of asylum and withholding of deportation applications by Immigration Judges for those applicants who are in exclusion or deportation proceedings. At the same time, it preserves an opportunity, prior to the institution of proceedings, for adjudication of initial applications in a nonadversarial setting by a specially-trained corps of Asylum Officers. Other substantive and procedural modifications have been made as well, as have a number of minor clerical and format changes.

DATE: Written comments must be submitted on or before May 6, 1988.

ADDRESS: Please submit written comments in duplicate to the Director, Policy Directives and Instructions, Immigration and Naturalization Service, 425 Eye Street NW., Room 2011, Washington DC 20536.

FOR FURTHER INFORMATION CONTACT:

For General Information: Richard A. Sloan, Director, Policy Directives and Instructions, Immigration and Naturalization Service, 425 Eye Street NW., Washington, DC 20536. Telephone: (202) 633-3048.

For Specific Information: Robert C. Hill, Deputy Director and Counsel, Asylum Policy and Review Unit, Department of Justice, 10th and Constitution Ave. NW., Room 6213, Washington, DC 20530. Telephone: (202) 633-2415; or

Ralph Thomas, Deputy Assistant Commissioner, Refugee, Asylum and Parole, Immigration and Naturalization Service, 425 Eye Street NW., Washington, DC 20536. Telephone: (202) 633-5463; or

Gerald Hurwitz, Counsel to the Director, Executive Office for Immigration Review, 5203 Leesburg Pike, Suite 1609, Falls Church, Virginia 22041. Telephone: (703) 756-6470.

SUPPLEMENTARY INFORMATION: The Refugee Act of 1980 created a statutory basis for asylum in the United States and made withholding of deportation for those who qualify mandatory rather than discretionary. Eligibility for asylum requires a showing of actual persecution or a "well-founded fear of persecution on account of race, religion, nationality, membership in a particular social group, or political opinion." Entitlement to withholding of deportation requires a showing that the life or freedom of the applicant would be threatened in the country of proposed deportation on account of race, religion, nationality, membership in a particular social group, or political opinion. Interim regulations establishing procedures and standards governing applications under the provisions of the Refugee Act of 1980 were published on June 2, 1980. These interim regulations (hereafter referred to as the "1980 interim rule") were intended to be amended by the proposed rule published on August 28, 1987 (hereafter referred to as the "August 28 rule"), which in turn is further modified by this revised proposed rule (hereafter referred to as the "revised rule").

To assist individuals or organizations wishing to comment on this revised rule, the following discussion of the most significant procedural and substantive changes made to the August 28 rule is provided and should be consulted in conjunction with the supplementary information published on that date. Some of the provisions commented upon by interested parties during the public comment period on the August 28 rule are not discussed in this review because the identical or similar provisions remain in the revised rule and therefore are subject to further comment for the duration of the additional 30-day comment period.

(1) Jurisdiction—Immigration Judges

The August 28 rule would create the position of Asylum Officer within the Office of Refugee, Asylum, and Parole in INS and would require that all applications for asylum or withholding of deportation be referred to an Asylum Officer and adjudicated in a nonadversarial setting. Asylum Officers, reporting directly to the Assistant Commissioner, Office of Refugee, Asylum, and Parole, would have had exclusive jurisdiction over asylum and withholding of deportation claims and their decisions would have been binding upon Immigration Judges in any subsequent exclusion or deportation hearing. Appeals from such decisions to the Board of Immigration Appeals would have been permitted only after the decision had been incorporated into the Immigration Judge's decision in that exclusion or deportation proceeding. In short, the jurisdiction exercised by Immigration Judges over asylum and withholding of deportation claims under the 1980 interim rule would have been eliminated.

The proposal to vest exclusive jurisdiction in Asylum Officers within INS was widely criticized during the public comment period. It was argued that the proposed system of exclusive jurisdiction would infringe upon the due process rights of applicants, that by statutory intent withholding of deportation could only be considered in the context of a deportation proceeding, that Asylum Officers were to be part of the administrative agency charged with removing any applicants denied asylum and thus would be inherently biased by that agency's enforcement priorities, and finally that there was no period of experience with adjudication by such Asylum Officers which would provide justification for such a radical restructuring of the current process.

Upon consideration of these comments adverse to this part of the August 28 rule, the Department of Justice announced on December 10, 1987 (52 FR 46776) its intention to modify the rule to provide for continued adversarial adjudications of asylum and withholding of deportation applications by Immigration Judges for those applicants who are in exclusion or deportation proceedings. This revised rule fulfills that intention by maintaining a system of adjudication parallel to that established in the 1980 interim rule with the exception that Asylum Officers

under the revised rule would now assume the jurisdiction formerly exercised by District Directors. The modification as now proposed acknowledges the merit of the criticism that there is at present no base of experience with such Asylum Officers sufficient to justify vesting them with exclusive jurisdiction. But the Department reserves judgment on the merits of the other specific objections raised in the public comments pending the acquisition of such experience.

(2) Jurisdiction—Asylum Officers

The Department believes that the August 28 rule's proposal to create a specially-trained corps of Asylum Officers within the Office of Refugee, Asylum, and Parole is sound and it will be retained under the revised rule with limited rather than exclusive jurisdiction. The jurisdiction now proposed for Asylum Officers is essentially identical to that currently exercised by District Directors under the 1980 interim rule. In addition, the revised proposed rule now requires that these Asylum Officers receive appropriate training in international law and international relations under the joint direction of the Assistant Commissioner, Refugee, Asylum and Parole, and the Director of the Asylum Policy and Review Unit of the Office of Legal Policy, Department of Justice.

The original decision to give Asylum Officers exclusive jurisdiction over asylum and withholding of deportation applications was motivated by the desire to have a specialized corps dedicated solely to asylum adjudications and was intended to bring greater efficiency and uniformity to the adjudication process. It should be pointed out that this is not a new idea, but was initially a recommendation of the Select Commission on Immigration and Refugee Policy (1979–81) and was subsequently included in the immigration reform bill sent to Congress by the Reagan Administration in 1981.

At present, both the Immigration Judges and the Immigration Examiners who interview applicants for INS District Directors spend considerable time on other matters. Although the INS has moved to designated asylum examiners in many districts, these officers have not all received specialized training and most divide their attention between asylum and other applications. The proposed restructuring with retention of divided jurisdiction contained in this revised rule will create an Asylum Officer corpos which over an appropriate period of time will develop expertise in the adjudication of asylum and withholding of deportation claims. In addition, it is expected to result in a greater degree of uniformity than currently experienced under the system established by the 1980 interim rule. Finally, it will offer a transition period during which proper procedures can be adapted to adequately ensure the due process right of asylum applicants should it ultimately prove advisable to fully develop the kind of exclusive jurisdiction system contemplated in the August 28 rule and similar UNHCR recommendations.

(3) Procedure—Motions to Reopen or Reconsider

The revised rule necessarily incorporates significant procedural modifications to the August 28 rule, in particular with regard to initial filings and related reopenings of various proceedings.

Under the August 28 rule, Immigration Judges were to be removed from the asylum adjudication process. The revised rule now proposes to retain the jurisdiction of Immigration Judges existing under the 1980 interim rule, including the adjudication of asylum claims raised in the context of reopening deportation or exclusion proceedings based either on the filing of an initial application under § 208.4 of the revised rule or on the request to reopen or reconsider a previously denied claim under § 208.19 of the revised rule. In either instance, consistent with the requirements governing all proceedings, a formal motion to reopen, reconsider, or remand as appropriate is now a procedural necessity unforeseen under the system of exclusive jurisdiction contemplated in the August 28 rule.

Therefore, the revised rule incorporates, without substantive change, the requirements for the reopening of exclusion or deportation proceedings that currently exist under the 1980 interim rule and elsewhere in Title 8.

(4) Procedure—Scope of Evidentiary Hearings

Sections 236.3(c) and 242.17(c)(4) of the revised rule have been modified to clarify the proper authority of Immigration Judges, where appropriate, to limit the scope of evidentiary hearings in exclusion or deportation proceedings to matters that are dispositive of the application for relief. In part, this modification in the rule is designed to overcome the result reflected in such recent cases as *Arauz* v. *Rivkind*, 834 F.2d 979 (86–5415, 11th Cir., Dec. 31, 1987), in which an Immigration Judge has been required to conduct a full evidentiary hearing on all aspects of a case even though the applicant was properly subject to a mandatory grounds for denial of his asylum application.

Both the Board of Immigration Appeals and Immigration Judges have long exercised authority to limit the scope of their inquiry, and thus the scope of any necessary factual hearing, on applications for various forms of relief from deportation if it became obvious that such relief would ultimately be denied because of statutory ineligibility. This procedure has allowed the Board and Immigration Judges to dispense with evidentiary hearings on issues relating to applications that are unnecessary to the resolution of a particular case.

Therefore, the revised rule now makes it clear that, during an exclusion or deportation proceeding, a full evidentiary hearing is not required with respect to factual issues that do not form the basis for the resolution of the case if one or more grounds exist for the mandatory denial of the applicant's claim for asylum or withholding of deportation. If it is apparent upon the record developed during a proceeding that the alien is clearly ineligible for asylum or withholding of deportation, the Immigration Judge will be permitted to forego a further evidentiary hearing on questions extraneous to the decision, thus avoiding unnecessary and time consuming factual hearings on nondispositive issues.

The Immigration Judge will continue to have the discretion to address issues that are appropriate to the adjudication of the application, but would be required to follow an inflexible approach with regard to the scope of the hearing on all aspects of a particular asylum or withholding of deportation claim.

(5) Establishing Refugee Status—Burden of Proof

As mandated in section 208 of the Immigration and Nationality Act and reflected in the Supreme Court decision in the case of *Immigration and Naturalization Service* v. *Cardoza-Fonseca*, _____ U.S. _____, 107 S. Ct. 1207 (1987), the August 28 rule requires that an applicant for asylum establish that he is a refugee as defined in the Act. This basic requirement, which is intended to govern adjudications by both Asylum Officers and Immigration Judges, is retained in its essential form under the revised rule with one significant substantive clarification and several minor format changes.

Under the revised rule, the applicant's burden of establishing refugee status and consequent eligibility for a discretionary grant of asylum continues

to be met when he shows by a preponderance of the evidence that he has suffered actual persecution or that he has a well-founded fear of persecution in that there is a reasonable possibility that a person in the applicant's position would be persecuted if returned to his country of nationality or last habitual residence.

The August 28 rule was drafted to recognize that the flight or defection of a bona fide refugee from a country that engages in widespread persecution may leave him in a difficult position to corroborate his claim. Accordingly, under that rule as drafted, an applicant is permitted to show that a person in his position, as opposed to himself specifically, could be subject to persecution. Specifically, in evaluating whether an applicant has sustained the burden of proof, § 208.12(b)(2)(ii)(A) of the August 28 rule requires due consideration to be given to evidence establishing that the government of the applicant's country of nationality or last habitual residence persecutes groups of persons similarly situated to the applicant.

However, the INS District Director in Bangkok pointed out that the language stating that the applicant shall not be required to provide evidence that he would be singled out individually could lead to the assumption that mere group membership alone—however nominal—would be sufficient to establish refugee status. The existence of some pattern of persecution of a particular group of persons who share nominal characteristics in common with the applicant does not in itself establish a well-founded fear of persecution for that applicant. He must also explain why he would be substantially identified with that particular group such that there is a reasonable possibility of his suffering persecution should he return to his country. Section 208.13(b)(2)(i) of the revised rule has been re-drafted to clarify this requirement consistent with the case-by-case consideration of asylum claims contemplated in the Refugee Act of 1980.

(6) Entitlement to Withholding of Deportation—Burden of Proof

A provision parallel to that contained in § 208.13(b)(2)(i) of the revised rule as discussed in (4) above and which is appropriate to the adjudication of withholding of deportation claims has been included in § 208.16(b)(3) of the revised rule. In addition, other clarifications and minor format changes have been made in § 208.16.

(7) Approval or Denial of Applications

Two specific provisions in § 208.13 of the August 28 rule concerning the standards for the approval or denial of asylum attracted comment resulting in corrective modification under the revised rule.

Section 208.14(b) of the revised rule reflects a clarification of the evidentiary standard to be applied in evaluating a basis for mandatory denials under § 208.14(c). As drafted, the August 28 rule shifted the burden of proof to the applicant if the evidence raised the mere possibility that one or more of the grounds for a mandatory denial was applicable. It was observed that even a scintilla of evidence would be sufficient under this formulation to shift the burden to the applicant to disprove what may amount to no more than an allegation. Clearly, this was not the intent of the original proposal. The correct standard instead requires a balancing of factors by the adjudicator who must determine whether evidence presented to him reasonably indicates the presence of a basis for a mandatory denial before requiring the applicant to meet the burden of refuting it. Accordingly, the standard has been redrafted to provide such flexibility to the adjudicator and a corresponding clarification has been made to § 208.16(c)(3) of the revised rule appropriate to the approval or denial of applications for withholding of deportation.

In addition, because of serious concerns with respect to the difficulties in determining the validity of allegations of "serious non-political crimes" committed prior to arrival in the United States, the Department believes it preferable to eliminate § 208.14(c)(2) as a ground for the mandatory denial of asylum. The parallel provision contained in § 208.16(c)(2)(iii) with respect to mandatory denials of witholding of deportation will remain intact because it is required by statute. However, in the asylum context, evidence of the commission of such non-political crimes will now be a discretionary factor to be considered together with the totality of circumstances and equities on a case-by-case basis consistent with the proper intent of the Refugee Act of 1980 as well as the 1951 UN Convention and 1967 Protocol Relating to the Status of Refugees.

Section 208.13(d) of the August 28 rule attempted to articulate factors to be considered in discretionary grants or denials of asylum to applicants who had established eligibility as refugees. This provision, too, attracted thoughtful comment and criticism.

Serious objections were raised to the listing of adverse factors which might form the basis of discretionary denials. And, although the listing of specific favorable factors was developed and included in the August 28 rule as an addition to existing regulations under the 1980 interim rule, several comments suggested that those favorable factors be expanded. Most persuasive, however, were comments suggesting the difficulties and consequent dangers of attempting to codify comprehensive standards for such an exercise of discretion—though such was not the intent of the original provision.

The intent of § 208.13(d) of the August 28 rule was only to provide guidance to adjudicators as to the kinds of factors to be considered, but was not intended to be construed as constituting the sole or exclusive grounds for a discretionary grant or denial nor to in any way limit or restrict the Attorney General's flexibility in exercising his discretion under the Act. It is clearly impossible to foresee and enumerate all of the favorable or adverse factors which may be relevant and should be considered in the exercise of administrative discretion. The Department is now persuaded that listing some factors, even with a caveat that such list is not inclusive would be imprudent because it poses the danger that the use of such guidelines may become so rigid as to amount to an abuse of discretion.

Therefore, we have withdrawn § 208.13(d) of the August 28 rule, while making it clear that grants or denials of asylum in the exercise of discretion are appropriate and that the factors which were articulated in that section, as well as the guidance provided by recently evolving case law reflected in the decisions of the Board of Immigration Appeals, are the kinds of considerations that will continue to influence proper asylum adjudications to the extent that they are consistent with the legislative intent expressed in the Refugee Act of 1980.

(8) Restoration of Status

In order to conform with legislative requirements governing the conferral and maintainence of nonimmigrant status, § 208.23 of the revised rule now makes restoration or continuation of nonimmigrant status after a denial of asylum to an applicant who was in such status at the time of initial filing permissive rather than mandatory. This change reflects the determination that filing for asylum indicates an unwillingness to return to one's country

of residence normally sufficienct to give rise to the presumption of section 214 of the Act that an alien is an intending immigrant until he demonstrates otherwise.

Nevertheless, the revised rule is intended to allow flexibility to avoid discouraging the filing of asylum applications under reasonable circumstances such as the fact that the cancellation of non-immigrant status for A or G visa holders might preclude their continuing to perform in their jobs. Other non-immigrant visa holders might qualify for restoration of status after denial if they can establish their intention to leave the United States upon completion of the period of activity on which their nonimmigrant status is based.

(9) The new procedures established in the revised rule continue to apply only to applications for asylum or withholding of deportation filed on or after the date the rule becomes final.

Other provisions would be revised to make them consistent with changes outlined above as well as with the procedural requirements set forth throughout Title 8 of the Code of Federal Regulations, particularly those governing Immigration Judge and Board of Immigration Appeals proceedings.

The revised proposed rule will further facilitate the asylum and withholding of deportation process in a manner consistent with the language and intended effect of the Refugee Act of 1980.

In accordance with 5 U.S.C. 605(b), the Attorney General certifies that the rule will not have a significant economic impact on a substantial number of small entities. This rule, if promulgated, will not be a major rule within the meaning of section 1(b) of E.O. 12291. The information collections in this rule have been approved under the Paperwork Reduction Act.

List of Subjects

8 CFR Part 3

Administrative practice and procedures.

8 CFR Part 208

Administrative practice and procedures, Aliens, Asylum, Immigration, Jurisdiction.

8 CFR Part 236

Administrative practice and procedures, Aliens, Immigration.

8 CFR Part 242

Administrative practice and procedures, Aliens, Detention, Deportation.

8 CFR Part 253

Aliens, Asylum, Crewmen, Parole.

Accordingly, it is proposed to amend Chapter I of Title 8 of the Code of Federal Regulations as follows:

PART 3—[AMENDED]

1. The authority citation for Part 3 continues to read as follows:

Authority: Secs. 103, 292, 66 Stat. 173, 235, 8 U.S.C. 1103, 1362, sec. 2, Reorg. Plan No. 2 of 1950, 15 FR 3173, 3 CFR 1949–1953 Comp., p. 1003, unless otherwise noted.

§ 3.22 [Amended]

2. In Part 3, Executive Office for Immigration Review, § 3.22, the second sentence of paragraph (b)(1) is revised to read as follows: "Such motions shall comply with applicable provisions of 8 CFR 208.4, 208.19, and 242.22."

3. Part 208 is revised to read as follows:

PART 208—PROCEDURES FOR ASYLUM AND WITHHOLDING OF DEPORTATION

Sec.

208.1 General.
208.2 Jurisdiction.
208.3 Form of application.
208.4 Filing the application.
208.5 Special duties toward alien in custody of INS.
208.6 Disclosure to third parties.
208.7 Interim employment authorization.
208.8 Limitations on travel outside the United States.
208.9 Interview and procedure.
208.10 Failure to appear.
208.11 Comments from the Bureau of Human Rights and Humanitarian Affairs.
208.12 Reliance on information compiled by other sources.
208.13 Establishing a refugee status; burden of proof.
208.14 Approval or denial of application.
208.15 Definition of "Firm Resettlement".
208.16 Entitlement to withholding of deportation.
208.17 Decision.
208.18 Review of decisions and appeal.
208.19 Motion to reopen or reconsider.
208.20 Approval and employment authorization.
208.21 Admission of asylee's spouse and children.
208.22 Effect on deportation proceedings.
208.23 Restoration of status.
208.24 Revocation of Asylum or withholding of Deportation.

Authority: 8 U.S.C. 1103, 1158, 1226, 1252, 1253, and 1283.

§ 208.1 General.

(a) This part shall apply to all applications for asylum or withholding of deportation that are filed on or after the effective date of this rule. No application for asylum or withholding of deportation that has been filed with a District Director or Immigration Judge prior to the effective date of this rule may be reopened or otherwise reconsidered under this rule except by motion granted in the exercise of discretion by the Board of Immigration Appeals, as Immigration Judge or an Asylum Officer for proper cause shown. Motions to reopen or reconsider must meet the requirements of 8 CFR 3.2, 3.8, 3.22, 103.5, and 242.22 where applicable. The adoption of this rule shall not affect the finality or validity of any prior decision by District Directors, Immigration Judges, or the Board of Immigration Appeals in any asylum or withholding of deportation case.

(b) There shall be attached to the Office of Refugee, Asylum, and Parole such number of employees as the Commissioner, upon recommendation from the Assistant Commissioner, shall direct. These shall include a corps of professional Asylum Officers who are to receive special training in international relations and international law under the joint direction of the Assistant Commissioner, Office of Refugee, Asylum, and Parole and the Director of the Asylum Policy and Review Unit of the Office of Legal Policy of the Department of Justice. The Assistant Commissioner shall be further responsible for general supervision and direction in the conduct of the asylum program, including evaluation of the performance of the employees attached to the Office

(c) As an ongoing component of the training required by paragraph (b) of this section, the Assistant Commissioner, Office of Refugee, Asylum and Parole, shall assist the Deputy Attorney General and the Director of the Asylum Policy and Review Unit, in coordination with the Department of State, to compile and disseminate to Asylum Officers information concerning the persecution of persons in other countries on account of race, religion, nationality, membership in a particular social group, or political opinion, as well as other information relevant to asylum determinations.

§ 208.2 Jurisdiction.

(a) Except as provided in paragraph (b) of this section, the Office of Refugee, Asylum, and Parole shall have initial jurisdiction over applications for asylum and withholding of deportation filed by an alien physically present in the United States of seeking admission at a port of entry. All such applications shall be decided in the first instance by Asylum Officers under this rule.

(b) Immigration Judges shall have exclusive jurisdiction over asylum applications filed by an alien who has been served notice of referral to exclusion proceedings under Part 236 of this chapter, or served an order to show cause under Part 242 of this chapter, after a copy of the charging document has been filed with the Office of the Immigration Judge. The Immigration Judge shall make a determination on such claims *de novo* regardless of whether or not a previous application was filed and adjudicated by an Asylum Officer prior to the initiation of exclusion or deportation proceedings. Any previously filed but unadjudicated asylum application must be resubmitted by the alien to the Immigration Judge.

§ 208.3 Form of application.

(a) An application for asylum or withholding of deportation shall be made on Form I-589 (Request for Asylum in the United States). The applicant's spouse and children as defined in section 101 of the Act may be included on the application if they are in the United States. An application shall be accompanied by one completed Form G-325A (Biographical Information) and one completed Form FD-258 (Fingerprint Card) for every individual included on the application who is fourteen years of age or older; additional supporting material may also accompany the application. Forms I-589, G325A, and FD-258 shall be available from the Office of Refugee, Asylum, and Parole, each District Director, and the Offices of Immigration Judges.

(b) An application for asylum shall be deemed to constitute at the same time an application for withholding of deportation, pursuant to §§ 208.16, 236.3, and 242.17 of this chapter.

§ 208.4 Filing the application.

If no prior application for asylum or withholding of deportation has been filed, an applicant shall file any initial application according to the following procedures:

(a) *With the District Director.* Except as provided in paragraph (b) of this section, applications for asylum or withholding of deportation shall be filed with the District Director having jurisdiction over the place of the applicant's residence or over the port of entry from which the applicant seeks admission to the United States. The District Director shall immediately forward the application to an Asylum Officer with jurisdiction in his district. The Asylum Officer shall notify the Asylum Policy and Review Unit of the Department of Justice and shall forward a copy of the completed application, including any supporting material subsequently received pursuant to § 208.8(e), to the Office of Refugee Asylum and Parole and the Bureau of Human Rights and Humanitarian Affairs of the Department of State.

(b) *With the Immigration Judge.* Initial applications for asylum or withholding of deportation are to be filed with the Office of the Immigration Judge in the following circumstances:

(1) *During Exclusion or Deportation Proceedings.* If exclusion or deportation proceedings have been commenced against an alien pursuant to Part 236 or 242 of this chapter, an initial application for asylum or withholding of deportation from that alien shall be filed thereafter with the Office of the Immigration Judge.

(2) *After Completion of Exclusion or Deportation Proceedings.* If exclusion or deportation proceedings have been completed, an initial application for asylum or withholding of deportation shall be filed with the Office of the Immigration Judge having jurisdiction over the prior proceeding in conjunction with a motion to reopen pursuant to 8 CFR 3.8, 3.22 and 242.22 where applicable.

(3) *Pursuant to Appeal to the Board of Immigration Appeals.* If jurisdiction over the proceedings is vested in the Board of Immigration Appeals under Part 3 of this chapter, and initial application for asylum or withholding of deportation shall be filed with the Office of the Immigration Judge having jurisdiction over the prior proceeding in conjunction with a motion to remand or reopen pursuant to 8 CFR 3.2 and 3.8 where applicable.

(4) Any motion to reopen or remand accompanied by an initial application for asylum filed under paragraph (b) of this section must reasonably explain the failure to request asylum prior to the completion of the exclusion or deportation proceeding.

§ 208.5 Special duties toward aliens in custody of INS.

(a) When an alien in the custody of the Service requests asylum or withholding of deportation or expresses fear of persecution or harm upon return to his country of origin or to agents thereof, the Service shall make available the appropriate application form for asylum and withholding of deportation and shall provide the applicant with a list, if available, of persons or private agencies that can assist in preparation of the application.

(b) Where possible, expedited consideration shall be given to applications of aliens detained under 8 CFR Part 235 or 242. Except as provided in paragraph (c) of this section, such alien shall not be deported or excluded before a decision is rendered on his initial asylum or withholding of deportation application.

(c) A motion to reopen or remand accompanied by an application for asylum or withholding of deportation pursuant to § 208.4(b) of this part shall not stay execution of a final order of exclusion or deportation unless such a stay is specifically granted by the Board or the Immigration Judge having jurisdiction over the motion.

§ 208.6 Disclosure to third parties.

(a) An application for asylum or withholding of deportation shall not be disclosed, except as permitted by this section, without the written consent of the applicant. Names and other identifying details shall be deleted from copies of asylum or withholding of deportation decisions maintained in public reading rooms under § 103.9 of this chapter.

(b) The confidentiality of other records kept by the Service (including G-325A forms) that indicate that a specific alien has applied for asylum or withholding of deportation shall also be protected from disclosure. The Service will coordinate with the Department of State to ensure that the confidentiality of these records is maintained when they are transmitted to State Department offices in other countries.

(c) This section shall not apply to any disclosure to:

(1) Any United States Government official or contractor having a need to examine information in connection with:

(i) Adjudication of asylum or withholding of deportation applications;

(ii) The defense of any legal action arising from the adjudication of or failure to adjudicate the asylum or withholding of deportation application;

(iii) The defense of any legal action of which the asylum or withholding of deportation application is a part; or

(iv) Any United States Government investigation concerning any criminal or civil matter;

(2) A representative of the United Nations High Commissioner for Refugees when the Attorney General or his representative, in consultation with the Secretary of State or his representative, determines that examination by the High Commissioner is appropriate; or

(3) Any Federal, state, or local court of the United States considering any legal action:

(i) Arising from the adjudication of or failure to adjudicate the asylum or withholding of deportation application; or

(ii) Arising from the proceedings of which the asylum or withholding of deportation application is a part.

§ 208.7 Interim employment authorization.

(a) The Asylum Officer or District Director to whom a request for employment authorization accompanying an application for asylum or withholding of deportation is referred shall authorize employment for a period not to exceed one year, unless renewed, to applicants who are not under detention and whose applications for asylum or withholding of deportation the Asylum Officer or Immigration Judge determines are not frivolous, that is, manifestly unfounded or abusive.

(b) Employment authorization shall be renewable for the continuous period of time necessary for the Asylum Officer or Immigration Judge to decide the application and, if necessary, for final adjudication of any administrative or judicial review. If the application is denied by the Asylum Officer or Immigration Judge, the employment authorization shall automatically terminate thirty days after that denial or affirmation of that denial by appellate authority.

(c) Upon the denied applicant's request, the District Director, in his discretion, may grant further employment authorization pursuant to 8 CFR 274a.12(c)(12) (52 FR 16220, May 1, 1987).

§ 208.8 Limitations on travel outside the United States.

An applicant who leaves the United States pursuant to advance parole granted under 8 CFR 212.5(e) shall be presumed to have abandoned his application under this section if he returns to the country of claimed persecution unless he is able to establish extraordinary and urgent reasons for having assumed the risk of persecution in so returning.

§ 208.9 Interview and procedure.

(a) For each application for asylum or withholding of deportation within the jurisdiction of an Asylum Officer, an interview shall be conducted by that Officer, either at the time of application or at a later date to be determined by the Officer in consultation with the applicant. Applications within the jurisdiction of an Immigration Judge are to be adjudicated under the rules of procedure established by the Executive Office for Immigration Review in Parts 3, 236, and 242 of this chapter.

(b) The Asylum Officer shall conduct the interview in a nonadversarial manner and out of hearing and view of the general public. The purpose of the interview shall be to elicit all relevant and useful information bearing on the applicant's eligibility for the form of relief sought. The applicant may have counsel or a representative present and may submit affidavits of witnesses.

(c) The Asylum Officer shall have authority to administer oaths, present and receive evidence, and question the applicant and any witnesses, if necessary.

(d) Upon completion of the interview, the applicant or his representative shall have an opportunity to make a statement or comment on the evidence presented. The Asylum Officer, in his discretion, may limit the length of such comments or statement and may require their submission in writing.

(e) Following the interview the applicant may be given a period not to exceed 30 days to submit evidence in support of his application, unless, in the discretion of the Asylum Officer, a longer period is required.

(f) The application, all supporting information provided by the applicant, any comments submitted by the Bureau of Human Rights and Humanitarian Affairs of the Department of State, the Asylum Policy and Review Unit of the Department of Justice, or by the Service, and any other information submitted to the Asylum Officer shall comprise the record.

§ 208.10 Failure to appear.

The unexcused failure of an applicant to appear for a scheduled interview may be presumed an abandonment of the application. Failure to appear shall be excused if the notice of the interview was not mailed to the applicant's current address and such address had been provided to the Office of Refugee, Asylum, and Parole by the applicant prior to the date of mailing in accordance with section 265 of the Act and regulations promulgated thereunder, unless the Asylum Officer determines that the applicant received reasonable notice of the interview. Such failure to appear may be excused for other serious reasons in the discretion of the Asylum Officer.

§ 208.11 Comments from the Bureau of Human Rights and Humanitarian Affairs.

(a) At its option, the Bureau of Human Rights and Humanitarian Affairs (BHRHA) of the Department of State may comment on an application it receives pursuant to §§ 208.4(a), 236.3 or 242.17 of this chapter by providing:

(1) An assessment of the accuracy of the applicant's assertions about conditions in his country of nationality or habitual residence and his own experiences,

(2) An assessment of his likely treatment were he to return to his country of nationality or habitual residence,

(3) Information about whether persons who are similarly-situated to the applicant are persecuted in his country of nationality or habitual residence and the frequency of such persecution,

(4) Information about whether one of the grounds for denial specified in § 208.14 may apply, or

(5) Such other information or views as it deems relevant to deciding whether to grant or deny the application.

(b) In all cases, BHRHA shall respond within 45 days of receiving a completed application by either (1) providing comments, (2) requesting additional time in which to comment, or (3) indicating that it does not wish to comment. If BHRHA requests additional time in which to provide comments, the Asylum Officer or Immigration Judge may grant BHRHA up to 30 additional days when this is necessary to gather information pertinent to the application or may proceed without BHRHA's comments. Failure to receive BHRHA's response shall not preclude final decision by the Asylum Officer or Immigration Judge if at least 60 days have elapsed since mailing the completed application to BHRHA. If the Deputy Attorney General determines that an expedited decision is necessary or appropriate, BHRHA shall provide its comments immediately.

(c) When an Asylum Officer or Immigration Judge receives an application from an alien in detention under 8 CFR Part 235 or 242, the Officer or Judge shall so notify BHRHA and request an expedited comment on the application which shall be provided no later than 30 days after request.

(d) Any Department of State comments provided under this section shall be made a part of the asylum record. Unless the comments are classified under Executive Order 12356, 3 CFR Part 166 (1982 Comp.), the applicant shall be given a copy of such comments and be provided an opportunity to respond prior to the issuance of an adverse decision.

§ 208.12 Reliance on information compiled by other sources.

(a) In deciding applications for asylum or withholding of deportation, the Asylum Officer may rely on material provided by the Department of State, the Asylum Policy and Review Unit, the Office of Refugee, Asylum, and Parole, the District Director having jurisdiction over the place of the applicant's residence or the port of entry from which the applicant seeks admission to

the United States, or other credible sources, such as international organizations, private voluntary agencies, or academic institutions. Prior to the issuance of an adverse decision made in reliance upon such material, that material must be identified and the applicant must be provided with an opportunity to inspect, explain, and rebut the material, unless the material is classified under Executive Order 12356.

(b) Nothing in this part shall be construed to entitle the applicant to conduct discovery directed toward the records, officers, agents, or employees of the Service, the Department of Justice, or the Department of State.

§ 208.13 Establishing refugee status; burden of proof.

(a) The burden of proof is on the applicant for asylum to establish that he is a refugee as defined in section 101(a)(42) of the Act. The testimony of the applicant, if credible in light of general conditions in the applicant's country of nationality or last habitual residence, may be sufficient to sustain the burden of proof without corroboration.

(b) The applicant may qualify as a refugee either because he has suffered actual past persecution or because he has a well-founded fear of future persecution.

(1) *Past Persecution.* An applicant shall be found to be a refugee on the basis of past persecution if he can establish first that he has suffered persecution in the past in his country of nationality or last habitual residence on account of race, religion, nationality, membership in a particular social group, or political opinion and second that he is unable or unwilling to return to or avail himself of the protection of that country owing to such persecution.

(i) If it is determined that the applicant qualifies as a refugee on the basis of past persecution, he shall be presumed to have a well-founded fear of persecution unless a preponderance of the evidence establishes that since the time the persecution occurred conditions in the applicant's country of nationality or last habitual residence have changed to such an extent that the applicant no longer has a well-founded fear of being persecuted if he were to return.

(ii) An application for asylum shall be denied if the applicant qualifies for refugee status on the basis of past persecution under this paragraph but is determined not to have a well-founded fear of future persecution under paragraph (b)(2) of this section, unless it is determined that the applicant has demonstrated compelling reasons for being unwilling to return to his country of nationality or last habitual residence arising out of the severity of the past persecution; if the applicant demonstrates such compelling reasons, he may be granted asylum unless such a grant is barred by paragraph (c) of this section or § 208.14(c) of this chapter.

(2) *Well-Founded Fear of Persecution.* An applicant shall be found to be a refugee on the basis of having a well-founded fear of persecution if he can establish first, that he has a fear of persecution in his country of nationality or last habitual residence on account of race, religion, nationality, membership in a particular social group, or political opinion, second, that there is a reasonable possibility of actually suffering such persecution if he were to return to that country, and third, that he is unable or unwilling to return to or avail himself of the protection of that country because of such fear.

(i) In evaluating whether the applicant has sustained his burden of proving that he has a well-founded fear of persecution, the Asylum Officer or Immigration Judge shall not require the applicant to provide evidence that he would be singled out individually for persecution if—

(A) He establishes that there is a pattern or practice in his country of nationality or last habitual residence of persecution of groups or categories of persons similarly situated to the applicant on account of race, religion, nationality, membership in a particular social group, or political opinion; and

(B) He establishes his own inclusion in and identification with such group or category of persons such that his fear of persecution upon return is reasonable.

(ii) In addition, the Asylum Officer or Immigration judge shall give due consideration to evidence that the government of the applicant's country of nationality or last habitual residence persecutes its nationals or residents if they leave the country without authorization or seek asylum in another country.

(c) An applicant shall not qualify as a refugee if he ordered, incited, assisted, or otherwise participated in the persecution of any person on account of race, religion, nationality, membership in a particular social group, or political opinion. If the evidence indicates that the applicant engaged in such conduct, he shall have the burden of proving by a preponderance of the evidence that he did not so act.

§ 208.14 Approval or denial of application.

(a) An Immigration Judge or Asylum Officer may grant or deny asylum in the exercise of discretion to an applicant who qualifies as a refugee under section 101(a)(42) of the Act unless otherwise prohibited by paragraph (c) of this section.

(b) If the evidence indicates that one or more of the grounds for denial of asylum enumerated in paragraph (c) of this section apply, the applicant shall have the burden of proving by a preponderance of the evidence that such grounds do not apply.

(c) *Mandatory Denials.* An application for asylum shall be denied if:

(1) The alien, having been convicted by a final judgment of a particularly serious crime in the United States, constitutes a danger to the community;

(2) The applicant has been firmly resettled within the meaning of § 208.15 of this chapter; or

(3) There are reasonable grounds for regarding the alien as a danger to the security of the United States.

§ 208.15 Definition of "Firm Resettlement".

An alien is considered to be firmly resettled if he entered into another nation with, or while in that nation received, an offer of permanent resident status, citizenship, or some other type of permanent resettlement unless he establishes:

(a) That his entry into that nation was a necessary consequence of his flight from persecution, that he remained in that nation only as long as was necessary to arrange onward travel, and that he did not establish significant ties in that nation, or

(b) That the conditions of his residence in that nation were so substantially and consciously restricted by the authority of the country of refuge that he was not in fact resettled. In making his determination, the Asylum Officer or Immigration Judge shall consider the conditions under which other residents of the country live, the type of housing made available to the refugee, whether permanent or temporary, the types and extent of employment available to the refugee, and the extent to which the refugee received permission to hold property and to enjoy other rights and privileges, such as travel documentation including a right of entry and/or reentry, education, public relief, or naturalization, ordinarily available to other residents in the country.

§ 208.16 Entitlement to withholding deportation.

(a) *Consideration of Application for Withholding of Deportation.* If the Asylum Officer denies an alien's application for asylum, he shall also decide whether the alien is entitled to withholding of deportation under section

243(h) of the Act. If the application for asylum is granted, no decision on withholding of deportation will be made unless and until the grant of asylum is later revoked or terminated and deportation proceedings are commenced at which a new request for withholding of deportation is made. In such proceedings, an Immigration Judge may adjudicate both a renewed asylum claim and a request for withholding of deportation simultaneously whether or not asylum is granted.

(b) *Eligibility for Withholding of Deportation; Burden of Proof.* The burden of proof is on the applicant for withholding of deportation to establish that his life or freedom would be threatened in the proposed country of deportation on account of race, religion, nationality, membership in a particular social group, or political opinion. The testimony of the applicant may be sufficient to sustain the burden of proof without corroboration. The evidence shall be evaluated as follows:

(1) The applicant's life or freedom shall be found to be threatened if it is more likely than not that he would be persecuted on account of race, religion, nationality, membership in a particular social group, or political opinion.

(2) If the applicant is determined to have suffered persecution in the past such that his life or freedom was threatened in the proposed country of deportation on account of race, religion, nationality, membership in a particular social group, or political opinion, it shall be presumed that his life or freedom would be threatened on return to that country unless a preponderance of the evidence establishes that conditions in the country have changed to such an extent that it is no longer more likely than not that the applicant would be so persecuted there.

(3) In evaluating whether the applicant has sustained the burden of proving that his life or freedom would be threatened in a particular country on account of race, religion, nationality, membership in a particular social group, or political opinion, the Asylum Officer or Immigration Judge shall not require the applicant to provide evidence that he would be singled out individually for such persecution if—

(i) He establishes that there is a pattern or practice in the country of proposed deportation of persecution of groups or categories of persons similarly situated to the applicant on account of race, religion, nationality, membership in a particular social group, or political opinion, and

(ii) He establishes his own inclusion in and identification with such group or category of persons such that it is more likely than not that his life or freedom would be threatened upon return.

(4) In addition, the Asylum Officer or Immigration Judge shall give due consideration to evidence that the life or freedom of nationals or residents of the country of claimed persecution is threatened if they leave the country without authorization or seek asylum in another country.

(c) *Approval or Denial of Application.* The following standards shall govern approval or denial of applications for withholding of deportation:

(1) Subject to paragraph (c)(2) of this section, an application for withholding or deportation to a country of proposed deportation shall be granted if the applicant's eligibility for withholding is established pursuant to paragraph (b) of this section.

(2) An application for withholding of deportation shall be denied if:

(i) The alien ordered, incited, assisted, or otherwise participated in the persecution of any person on account of race, religion, nationality, membership in a particular social group, or political opinion;

(ii) The alien, having been convicted by a final judgment of a particularly serious crime, constitutes a danger to the community of the United States;

(iii) There are serious reasons for considering that the alien has committed a serious nonpolitical crime outside the United States prior to arrival in the United States; or

(iv) There are reasonable grounds for regarding the alien as a danger to the security of the United States.

(3) If the evidence indicates that one or more of the grounds for denial of withholding of deportation enumerated in paragraph (c)(2) of this section apply, the applicant shall have the burden of providing by a preponderance of the evidence that such grounds do not apply.

(4) In the event that asylum is denied solely in the exercise of discretion but the applicant is subsequently granted withholding of deportation under this section, thereby effectively precluding admission of the applicant's spouse or minor children following to join him, the denial of asylum shall be reconsidered. Factors to be so considered will include the reasons for the denial and reasonable alternatives available to the applicant such as reunification with his spouse or minor children in a third country.

§ 208.17 Decision.

The decision of an Asylum Officer to grant or deny asylum or withholding of deportation shall be communicated in writing to the applicant, the District Director having jurisdiction over the place of the applicant's residence or over the port of entry from which he sought admission to the United States, the Assistant Commissioner, Refugee, Asylum, and Parole, and the Director of the Asylum Policy and Review Unit of the Department of Justice. An adverse decision will state why asylum or withholding of deportation was denied and will contain an assessment of the applicant's credibility.

§ 208.18 Review of decisions and appeal.

(a) The Assistant Commissioner, Office of Refugee, Asylum, and Parole, shall have authority to review decisions by Asylum Officers, before they become effective, in any cases he shall designate. The Office of the Deputy Attorney General, assisted by the Asylum Policy and Review Unit, shall have authority to review decisions by Asylum Officers, before they become effective, in any cases designated pursuant to 28 CFR 0.15(f)(3). There shall be no right of appeal to the Office of Refugee, Asylum, and Parole, to the Office of the Deputy Attorney General, or to the Asylum Policy and Review Unit, and parties shall have no right to appear before such offices in the course of such review.

(b) Except as provided in § 253.1(f) of this chapter, there shall be no appeal from a decision of an Asylum Officer. However, an application for asylum or withholding of deportation may be renewed before an Immigration Judge in exclusion or deportation proceedings. If exclusion or deportation proceedings have not been instituted against an applicant within 30 days of the Asylum Officer's final decision, the applicant may request in writing that the District Director having jurisdiction over the applicant's place of residence commence such proceedings. Absent exceptional circumstances, the District Director shall thereafter promptly institute proceedings against the applicant.

(c) A denial of asylum or withholding of deportation may only be reviewed by the Board of Immigration Appeals in conjunction with an appeal taken under 8 CFR Part 3.

§ 208.19 Motion to reopen or reconsider.

(a) A proceeding in which asylum or withholding of deportation was denied may be reopened or a decision from such a proceeding reconsidered for proper cause upon motion pursuant to the requirements of 8 CFR 3.2, 3.8, 3.22, 103.5, and 242.17 where applicable.

(b) A motion to reopen or reconsider shall be filed (1) with the District

Director having jurisdiction over the location at which the prior determination was made who shall forward the motion immediately to an Asylum Officer or (2) with the Office of the Immigration Judge having jurisdiction over the prior proceeding.

§ 208.20 Approval and employment authorization.

When an alien's application for asylum is granted, he is granted asylum status for an indefinite period. Employment authorization is automatically granted or continued for persons granted asylum or withholding of deportation unless the alien is detained pending removal to a third country. Appropriate documentation showing employment authorization shall be provided by the INS.

§ 208.21 Admission of asylee's spouse and children.

(a) *Eligibility.* A spouse, as defined in section 101(a)(35) of the Act, or child, as defined in section 101(b)(1)(A), (B), (C), (D), or (E) of the Act, may also be granted asylum if accompanying or following to join the principal alien, unless it is determined that—

(1) The spouse or child ordered, incited, assisted, or otherwise participated in the persecution of any person on account of race, religion, nationality, membership in a particular social group, or political opinion;

(2) The spouse or child, having been convicted by a final judgment of a particularly serious crime in the United States, constitutes a danger to the community of the United States;

(3) There are serious reasons for considering that the spouse or child has committed a serious, non-political crime outside the United States; or

(4) There are reasonable grounds for regarding the spouse or child a danger to the security of the United States.

(b) *Relationship.* The relationship of spouse and child as defined in section 101(b)(1) of the Act must have existed at the time the principal alien's asylum application was approved, except for children born to or legally adopted by the principal alien and spouse after approval of the principal alien's asylum application.

(c) *Spouse or child in the United States.* When a spouse or child of an alien granted asylum is in the United States but was not included in the principal alien's application, the principal alien may request asylum for the spouse or child by filing Form I-730 with the District Director having jurisdiction over his place of residence, regardless of the status of that spouse or child in the United States.

(d) *Spouse or child outside the United States.* When a spouse or child of an alien granted asylum is outside the United States, the principal alien may request asylum for the spouse or child by filing form I-730 with the District Director, setting forth the full name, relationship, date and place of birth, and current location of each such person. Upon approval of the request, the District Director shall notify the Department of State, which will send an authorization cable to the American Embassy or Consulate having jurisdiction over the area in which the asylee's spouse or child is located.

(e) *Denial.* If the spouse or child is found to be ineligible for the status accorded under section 208(c) of the Act, a written notice explaining the basis for denial shall be forwarded to the principal alien. No appeal shall lie from this decision.

(f) *Burden of proof.* To establish the claim of relationship of spouse or child as defined in section 101(b)(1) of the Act, evidence must be submitted with the request as set forth in Part 204 of this chapter. Where possible this will consist of the documents specified in 8 CFR 204.2(c)(2) and (3). The burden of proof is on the principal alien to establish by a preponderance of the evidence that any person on whose behalf he is making a request under this section is an eligible spouse or child.

(g) *Duration.* The spouse or child qualifying under section 208(c) of the Act shall be granted asylum for an indefinite period unless the principal's status is revoked.

§ 208.22 Effect on deportation proceedings.

(a) An alien who has been granted asylum may not be excluded or deported unless his asylum status is revoked pursuant to § 208.24 of this chapter. An alien in exclusion or deportation proceedings who is granted withholding of deportation may not be deported to the country as to which his deportation is ordered withheld unless withholding of deportation is revoked pursuant to § 208.24 of this chapter.

(b) When an alien's asylum status or withholding of deportation is revoked under this chapter, he shall be placed in deportation proceedings. Deportation proceedings may be conducted concurrently with a revocation hearing scheduled under § 208.24 of this chapter.

§ 208.23 Restoration of status.

An alien who was maintaining his nonimmigrant status at the time of filing an application for asylum or withholding of deportation may continue or be restored to that status, if it has not expired, notwithstanding the denial of asylum or withholding of deportation.

§ 208.24 Revocation of asylum or withholding of deportation.

(a) *Revocation of Asylum by the Assistant Commissioner, Office of Refugee, Asylum, and Parole.* Upon motion by the Assistant Commissioner and following a hearing before an Asylum Officer, the grant to an alien of asylum made under the jurisdiction of an Asylum Officer may be revoked if, by a preponderance of the evidence, the Service establishes that:

(1) The alien is no longer a refugee due to a change of conditions in the alien's country of nationality or habitual residence;

(2) There is a showing of fraud in the alien's application such that he was not eligible for asylum at the time it was granted; or

(3) The alien has committed any act that would have been grounds for denial of asylum under § 208.13(c) of this chapter.

(b) *Revocation of Withholding of Deportation by the Assistant Commissioner, Office of Refugee, Asylum, and Parole.* Upon motion by the Assistant Commissioner, and following a hearing before an Asylum Officer, the grant to an alien of withholding of deportation made under the jurisdiction of an Asylum Officer may be revoked if, by clear and convincing evidence, the Service establishes that:

(1) The alien is no longer entitled to withholding of deportation due to a change of conditions in the country to which deportation was withheld;

(2) There is a showing of fraud in the alien's application such that he was not eligible for withholding of deportation at the time it was granted;

(3) The alien has committed any act that would have been grounds for denial of withholding of deportation under § 208.16(c)(2) of this chapter.

(c) *Notice to Applicant.* Upon motion by the Assistant Commissioner to revoke asylum status or withholding of deportation, the alien shall be given notice of intent to invoke, with the reason therefore, at least thirty days before the hearing by the Asylum Officer. The alien shall be provided the opportunity to present evidence tending to show that he is still eligible for asylum or withholding of deportation. If the Asylum Officer determines that the alien is no longer eligible for asylum or withholding of deportation, the alien shall be given written notice that asylum status or withholding of deportation along with employment authorization are revoked.

(d) *Revocation of Derivative Status.* The termination of asylum status for a person who was the principal applicant shall result in termination of the asylum status of a spouse or children whose status was based on the asylum application of the principal.

(e) *Reassertion of Asylum Claim.* A revocation of asylum or withholding of deportation pursuant to paragraph (a) or (b) of this section shall not preclude the applicant from reasserting an asylum or withholding of deportation claim in any subsequent deportation proceeding.

(f) *Review.* The Office of the Deputy Attorney General, assisted by the Asylum Policy and Review Unit, shall have authority to review decisions to revoke asylum or withholding of deportation, before they become effective, in any cases designated pursuant to 28 CFR 0.15(f)(3). There shall be no right of appeal to the Office of the Deputy Attorney General or to the Asylum Policy and Review Unit and parties shall have no right to appear before such offices in the course of such review.

(g) *Revocation of Asylum or Withholding of Deportation by the Executive Office for Immigration Review.* An Immigration Judge or the Board of Immigration Appeals may reopen a case pursuant to § 3.2 or § 242.22 of this chapter for the purpose of revoking a grant of asylum or withholding of deportation made under the exclusive jurisdiction of an Immigration Judge. In such a reopened proceeding, the Service must similarly establish by the appropriate standard of evidence one or more of the grounds set forth in paragraph (a) or (b) of this section. Any revocation under this paragraph may occur in conjunction with a deportation proceeding.

PART 236—[AMENDED]

4. The authority citation for Part 236 is revised to read as follows:

Authority: 8 U.S.C. 1103, 1182, 1224, 1225, 1226, 1362.

5. Section 236.3 is revised to read as follows:

§ 236.3 Applications for asylum or withholding of deportation.

(a) If an alien expresses fear of persecution or harm upon return to his country of origin or to a country to which he may be deported after exclusion from the United States pursuant to Part 237 of this chapter, the Immigration Judge shall (1) advise the alien that he may apply for asylum in the United States or withholding of deportation to that other country, and (2) make available the appropriate application forms.

(b) An application for asylum or withholding of deportation must be filed with the Office of the Immigration Judge, pursuant to § 208.4(b) of this chapter. Upon receipt of the application, the Office of the Immigration Judge shall forward a copy to the Bureau of Human Rights and Humanitarian Affairs of the Department of State for their comments pursuant to § 208.11 of this chapter, and shall calendar the case for hearing, which shall be deferred pending receipt of the Department of State's comments. The reply, if any, from the Department of State, unless classified under Executive Order 12356, 3 CFR Part 166 (1982 Comp.), shall be given to both the applicant and to the Trial Attorney representing the government.

(c) Applications for asylum or withholding of deportation so filed will be decided by the Immigration Judge pursuant to the requirements and standards established in Part 208 of this chapter after an evidentiary hearing that is necessary to resolve material factual issues in dispute. An evidentiary hearing extending beyond issues related to the basis for a mandatory denial of the application pursuant to 8 CFR 208.14 or 208.16 is not necessary once the Immigration Judge has determined that such a denial is required.

(1) Evidentiary hearings on applications for asylum or withholding of deportation will be closed to the public unless the applicant expressly requests that it be open pursuant to § 236.2 of this part.

(2) Nothing in this section is intended to limit the authority of the Immigration Judge properly to control the scope of any evidentiary hearing.

(3) During the exclusion hearing, the applicant shall be examined under oath on his application and may present evidence and witnesses on his own behalf. The applicant has the burden of establishing that he is a refugee as defined in section 101(a) (42) of the Act pursuant to the standard set forth in § 208.13 of this chapter.

(4) The Trial Attorney for the government may call witnesses and present evidence for the record, including information classified under Executive Order 12356, 3 CFR Part 166 (1982 Comp.) provided the Immigration Judge or the Board has determined that such information is relevant to the hearing. When the Immigration Judge receives such classified information he shall inform the applicant. The agency that provides the classified information to the Immigration Judge should provide an unclassified summary of the information for release to the applicant, whenever it determines it can do so consistently with safeguarding both the classified nature of the information and its source. The summary should be as detailed as possible, in order that the applicant may have an opportunity to offer opposing evidence. A decision based in whole or in part on such classified information shall state that such information is material to the decision.

(d) The decision of an Immigration Judge to grant or deny asylum or withholding of deportation shall be communicated to the applicant and to the Trial Attorney for the government. An adverse decision will state why asylum or withholding of deportation was denied.

PART 242—[AMENDED]

6. The authority citation of Part 242 is revised to read as follows:

Authority: 8 U.S.C. 1103, 1252, 1254, 1362.

7. Section 242.17 (c), is revised to read as follows:

§ 242.17 Ancillary matters, applications.

* * * * *

(c) *Applications for asylum or withholding of deportation.* (1) The Immigration Judge shall notify the respondent that if he is finally ordered deported his deportation will in the first instance be directed pursuant to section 243(a) of the Act to the country designated by the respondent and shall afford him an opportunity then and there to make such designation. The Immigration Judge shall then specify and state for the record the country, or countries in the alternative, to which respondent's deportation will be directed pursuant to section 243(a) of the Act if the country of his designation will not accept him into its territory, or fails to furnish timely notice of acceptance, or if the respondent declines to designate a country.

(2) If the alien expresses fear of persecution or harm upon return to any of the countries to which he might be deported pursuant to paragraph (c)(1) of this section, the Immigration Judge shall—

(i) Advise the alien that he may apply for asylum in the United States or withholding of deportation to those countries, and

(ii) Make available the appropriate application forms.

(3) An application for asylum or withholding of deportation must be filed with the Office of Immigration Judge, pursuant to § 208.4(b) of this chapter. Upon receipt of the application, the Office of the Immigration Judge shall

forward a copy to the Bureau of Human Rights and Humanitarian Affairs of the Department of State for their comments pursuant to § 208.11 of this chapter, and shall calendar the case for hearing, which shall be deferred pending receipt of the Department of State's comments. The reply, if any, of the Department of State, unless classified under Executive Order 12356, 3 CFR Part 166 (1982 Comp.), shall be given to both the applicant and to the Trial Attorney representing the government.

(4) Applications for asylum or withholding of deportation so filed will be decided by the Immigration Judge pursuant to the requirements and standards established in Part 108 of this chapter after an evidentiary hearing that is necessary to resolve factual issues in dispute. An evidentiary hearing extending beyond issues related to the basis for a mandatory denial of the application pursuant to 8 CFR 208.14 or 208.16 is not necessary once the Immigration Judge has determined that such a denial is required.

(A) Evidentiary hearing on applications for asylum or withholding of deportation will be open to the public unless the applicant expressly requests that it be closed.

(B) Nothing in this section is intended to limit the authority of the Immigration Judge properly to control the scope of any evidentiary hearing.

(C) During the deportation hearing, the applicant shall be examined under oath on his application and may present evidence and witnesses in his own behalf. The applicant has the burden of establishing that he is a refugee as defined in section 101(a)(42) of the Act pursuant to the standard set forth in § 208.13 of this chapter.

(D) The Trial Attorney for the government may call witnesses and present evidence for the record, including information classified under Executive Order 12356, 3 CFR Part 166 (1982 Comp.) provided the Immigration Judge or the Board has determined that such information is relevant to the hearing. When the Immigration Judge receives such classified information he shall inform the applicant. The agency that provides the classified information to the Immigration Judge should provide an unclassified summary of the information for release to the applicant, whenever it determines it can do so consistently with safeguarding both the classified nature of the information and its source. The summary should be as detailed as possible, in order that the applicant may have an opportunity to offer opposing evidence. A decision based in whole or in part on such classified information shall state that such information is material to the decision.

(5) The decision of an Immigration Judge to grant or deny asylum or withholding of deportation shall be communicated to the applicant and to the Trial Attorney for the government. An adverse decision will state why asylum or withholding of deportation was denied.

* * * * *

PART 253—[AMENDED]

8. The authority citation for Part 253 is revised to read as follows:

Authority: 8 U.S.C. 1103, 1182, 1282, 1283, 1285.

9. Section 253.1(f) is revised to read as follows:

§ 253.1 Parole.

* * * * *

(f) *Crewman, stowaway, or alien temporarily excluded under section 235(c) alleging persecution.* Any alien crewman, stowaway, or alien temporarily excluded under section 235(c) of the Act who alleges that he cannot return to his country of nationality or last habitual residence (if not a national of any country) because of fear of persecution in that country on account of race, religion, nationality, membership in a particular social group, or political opinion, is eligible to apply for asylum or withholding of deportation under Part 208 of this chapter.

(1) If the alien is on a vessel or other conveyance and makes such fear known to an immigration inspector or other official making an examination on the conveyance, he shall be promptly removed from the conveyance in accordance with § 233.1 of this chapter. If the alien makes his fear known to an official while off such conveyance, he shall not be returned to the conveyance but shall be retained in or transferred to the custody of the Service.

(2) In either case, the alien shall be provided the appropriate application forms and such other information as is required by § 208.5 of this chapter and may then have ten (10) days within which to file an application for such relief with the District Director having jurisdiction over the port of entry from which the applicant seeks entry into the United States. The District Director, pursuant to § 208.4(a) of this chapter, shall immediately forward any such application to an Asylum Officer with jurisdiction over his district.

(3) Pending adjudication of the application by the Asylum Officer, the applicant shall be detained by the Service, or paroled into the custody of the ship's agent or otherwise paroled in accordance with § 212.5 of this chapter and shall not be excluded or deported before a decision is rendered by the Asylum Officer on his asylum application.

(4) A decision denying asylum to an alien crewman or stowaway, but not an alien temporarily excluded under section 235(c), may be appealed directly to the Board of Immigration Appeals. Such appeal must be filed within ten (10) days of the Asylum Officer's decision by filing a notice of appeal on Form I-290A with the District Director, who shall immediately forward the notice to the Asylum Officer. The Asylum Officer shall transmit the notice of appeal, his decision, and the record on which that decision was based, to the Board of Immigration Appeals. The filing of a notice of appeal shall stay the exclusion or deportation of the applicant pending decision on the appeal by the Board.

* * * * *

Dated: March 28, 1988.

Edwin Meese III,

Attorney General.

[FR Doc. 88-7407 Filed 4-5-88; 8:45 am]

BILLING CODE 4410-01-M

NUCLEAR REGULATORY COMMISSION

10 CFR Part 2

High-Level Waste Licensing Support System Advisory Committee (Negotiated Rulemaking); Sixth Meeting

AGENCY: Nuclear Regulatory Commission.

ACTION: Notice of sixth meeting.

SUMMARY: The Nuclear Regulatory Commission will hold the sixth meeting of the High-Level Waste Licensing Support System Advisory Committee on April 18-19, 1988. The Committee, established under authority of the Federal Advisory Committee Act (FACA), is tasked with developing recommendations for revision of the Commission's Rules of Practice in 10 CFR Part 2 related to the adjudicatory proceeding for the issuance of a license for a geologic repository for the disposal of high-level waste (HLW). The Committee is attempting to negotiate a consensus on proposed revisions related to the submission and management of records and documents for the HLW licensing proceeding.

DATE: The sixth meeting of the HLW Licensing Support System Advisory Committee will be held April 18-19, 1988.

ADDRESSES: The location of the April 18–19, 1988, meeting of the HLW Licensing Support System Advisory Committee is the Conservation Foundation, 1250 Twenty-Fourth St., NW., Washington, DC 20037.

FOR FURTHER INFORMATION CONTACT: Donnie H. Grimsley, Director, Division of Rules and Records, Office of Administration and Resources Management, U.S. Nuclear Regulatory Commission, Washington, DC 20555, Telephone: 301–492–7211.

SUPPLEMENTARY INFORMATION: The sixth meeting of the HLW Licensing Support System Advisory Committee ("negotiating committee") is scheduled to include continued discussion of substantive issues related to a high-level waste licensing support system.

The following are the remaining meetings of the negotiating committee that are scheduled as of the date of this notice:

May 18–19, 1988—The Conservation Foundation, Washington, DC.

Dated at Bethesda, Maryland, this 1st day of April, 1988.

For the Nuclear Regulatory Commission.

David L. Meyer,

Chief, Rules and Procedures Branch, Division of Rules and Records, Office of Administration and Resources Management.

[FR Doc. 88–7521 Filed 4–5–88; 8:45 am]

BILLING CODE 7590-01-M

---

10 CFR Part 50

Leak-Before-Break Technology; Solicitation of Public Comment on Additional Applications

AGENCY: Nuclear Regulatory Commission.

ACTION: Request for comments.

SUMMARY: The Nuclear Regulatory Commission (NRC) is proposing to investigate the safety benefits associated with using leak-before-break technology to modify functional and performance requirements for emergency core cooling systems (ECCS) and environmental qualifications (EQ) of safety related electrical and mechanical equipment.

DATE: The comment period expires on July 5, 1988. Comments received after this date will be considered if it is practical to do so, but assurance of consideration can only be given to comments received on or before this date.

ADDRESSES: Send written comments to the Secretary of the Commission, Washington, DC 20555, Attention: Docketing and Service Branch. Copies of comments received by the Commission may be examined at the NRC Public Document Room, 1717 H Street NW., Washington, DC 20555.

FOR FURTHER INFORMATION CONTACT: John A. O'Brien, Office of Nuclear Regulatory Research, U.S. Nuclear Regulatory Commission, Washington, DC 20555. Telephone (301) 492–3928.

SUPPLEMENTARY INFORMATION:

Existing Applications of Leak-Before-Break Technology

On October 27, 1987 (52 FR 41288), the NRC published a final rule which modified General Design Criterion 4 (GDC–4) in 10 CFR Part 50, Appendix A, by allowing the use of leak-before-break technology to eliminate from design consideration the dynamic effects of postulated ruptures in all piping in all reactor types that satisfy rigorous acceptance criteria. The supplementary information to this rule states, however, that containments, ECCS, and EQ of safety related electrical and mechanical equipment are not affected by leak-before-break technology. This introduced an inconsistency into the regulations which is addressed by this request for comment. While not emphasized in the final GDC–4 modification, when leak-before-break technology was disallowed for ECCS, EQ, and containment design, functional and performance requirements cited in different portions of 10 CFR Part 50 were maintained. However, limited case-by-case modifications of EQ functional and performance requirements were allowed in the GDC–4 amendment using the exemption process.

The specific functional and performance requirements retained when leak-before-break is accepted under the recent modification to GDC–4 are as follows:

1. *For Containments.* Global loads and environments associated with postulated pipe ruptures, including pressurization, internal flooding, and elevated temperature.

2. *For ECCS.* Heat removal and mass replacement capacity needed because of postulated pipe ruptures.

3. *For EQ.* Pressure, temperature, flooding level, humidity, chemical environment, and radiation resulting from postulated pipe ruptures.

However, under the recent modification of GDC–4 local dynamic effects uniquely associated with pipe rupture may be deleted from the design basis of containment systems, structures and boundaries, from the design basis of ECCS hardware (such as pumps, valves, accumulators, and instrumentation), and from the design bases of safety related electrical and mechanical equipment when leak-before-break is accepted. "Local dynamic effects uniquely associated with pipe rupture" means dynamic effects due to pipe whipping, jet impingement, missiles, local pressurizations, pipe break reaction forces, and decompression waves in the intact portions of piping postulated to rupture. Glocal pressurizations, temperature transients, and flooding transients on containment systems and structures are not local dynamic effects and may not be uniquely related to pipe rupture, and therefore are retained for containment design. Thus, while functional and performance requirements for containments, ECCS, and EQ remain unchanged under the now effective modification of GDC–4, the design bases for these aspects of facility design have been modified in that local dynamic effects uniquely associated with ruptures in piping which qualified for leak-before-break may be excluded from consideration.

This present notice examines the potential additional application of leak-before-break technology to modifying functional and performance requirements for emergency core cooling systems and for environmental qualification of safety related electrical and mechanical equipment. Modification of functional and performance requirements for containments is explicitly excluded from consideration at this time.

Invitation To Comment

To meet its statutory obligation to assure an adequate level of safety, the NRC uses the "defense-in-depth" concept which is codified in the General Design Criteria in 10 CFR Part 50, Appendix A. Stated in simple terms, and with some notable exceptions, defense-in-depth is implemented by utilizing high standards of design, fabrication, and inspection, and then postulating severe failure in structures, systems, and components. It must be demonstrated that these severe failures will not lead to undue risk to public health and safety. Risk is generally kept low by employing redundancy and diversity in design. When severe failures are unacceptable (as for example, in reactor pressure vessels), extraordinarily high standards are required. In the case of piping, different standards of design, fabrication, and inspection are imposed depending on the safety significance of the piping. Until recently, severe failure for piping has been defined as the instantaneous double-ended guillotine break regardless of the standards applied to piping. Under leak-before-

break technology, it has become possible to exclude the double-ended guillotine break from the dynamic structural design basis because it is unrealistic and overly conservative in certain situations. Piping which meets NRC's acceptance criteria now need only postulate stipulated "leakage cracks" as severe failure. This relaxation in requirements under the final GDC-4 amendment actually improves safety because it allows the removal of counter-productive hardware which impedes inservice inspection, could restrain thermal growth of piping (leading to unforeseen stresses and cracking), and could degrade seismic performance of piping due to impacting between piping and pipe whip restraints during earthquakes. Worker occupational radiation dosages are reduced substantially.

When the Commission published the proposed broad scope amendment to GDC-4, comment was invited on the decision to limit impacts of this modification to only dynamic effects associated with pipe rupture. In response to this request, a number of commentators stated that the use of the leak-before-break technology should be extended to modify the requirements for EQ and ECCS. Safety benefits for EQ and ECCS were suggested wherein protection against the effects and consequences of postulated pipe ruptures causes less reliable overall performance. Because the NRC is primarily concerned with fulfilling its safety mission, documented evidence describing safety degradations and safety enhancements due to postulated pipe rupture requirements on EQ and ECCS is requested. Specifically, actual citations from operating experience are requested; however, conclusions based on testing and deterministic or probabilistic evaluations would also be useful.

The priority which the NRC assigns to modifying functional and performance requirements for EQ and ECCS will be determined in large measure from the balance between accrued safety benefits and detriments believed to result (including impacts on severe accident performance). If it can be shown that net safety benefits outweigh the detriments, then modification to the existing design bases may be permitted.

Dated at Washington, DC, this 1st day of April 1988.

For the Nuclear Regulatory Commission.

Samuel J. Chilk,

Secretary of the Commission.

[FR Doc. 88-7538 Filed 4-5-88; 8:45 am]

BILLING CODE 7590-01-M

DEPARTMENT OF HEALTH AND HUMAN SERVICES

Food and Drug Administration

21 CFR PART 133

[Docket No. 84P-0133]

Pasteurized Process Cheese Spread; Proposal To Amend Standards of Identity

AGENCY: Food and Drug Administration.

ACTION: Proposed rule.

SUMMARY: The Food and Drug Administration (FDA) is proposing to amend the standards of identity for pasteurized process cheese spread and, by cross-reference, three other cheese spread standards to permit the use of nisin. Nisin is an antimicrobial agent which prevents the outgrowth of *Clostridium botulinum* spores and toxin formation in the packaged cheese. This action is taken to promote honesty and fair dealing in the interest of consumers.

DATES: Comments by June 6, 1988. The agency proposes that any final rule that may issue based upon this proposal shall become effective 60 days after date of publication of the final rule in the **Federal Register.**

ADDRESS: Written comments to the Dockets Management Branch (HFA-305), Food and Drug Administration, Rm. 4-62, 5600 Fishers Lane, Rockville, MD 20857.

FOR FURTHER INFORMATION CONTACT: Karen L. Carson, Center for Food Safety and Applied Nutrition (HFF-414), Food and Drug Administration, 200 C Street, SW., Washington, DC 20204, 202-485-0110.

SUPPLEMENTARY INFORMATION: Arthur A. Checchi, Inc., representing Aplin and Barrett, Ltd. of Trowbridge, Wiltshire, England, submitted a citizen petition, dated March 30, 1984, requesting that FDA amend the standards of identity for pasteurized process cheese spread (21 CFR 133.179) and, cross-reference, pasteurized cheese spread (21 CFR 133.175), pasteurized cheese spread with fruits, vegetables, or meats (21 CFR 133.176), and pasteurized process cheese spread with fruits, vegetables, or meats (21 CFR 133.180), to require the mandatory addition of 250 parts per million (ppm) nisin to the food. The petition identifies nisin as a microbiological inhibitory substance which is produced by *Streptococcus lactis*, Lancefield group N.

The petitioner asserts that this action is necessary to prevent the outgrowth of *C. botulinum* spores and subsequent botulinal toxin production in these foods. The petitioner believes that under certain conditions this outgrowth is possible because these cheese spreads are: (1) Packaged in hermetically sealed containers, (2) not refrigerated during retail marketing, (3) not sterile, and (4) cannot be rendered sterile by heat processing without adversely affecting the texture and flavor of the food.

Pasteurized process cheese formulations commonly used in the United States are relatively low in moisture and contain emulsifiers and salt at the high end of the range of concentration permitted by the standard. The petitioner believes these factors may have been effective in preventing the outgrowth of *C. botulinum* in the past. However, with the emphasis today on reducing the sodium content of the diet, it is the petitioner's position that manufacturers may reduce the sodium content of cheese spreads and manufcture products in the high moisture range thereby increasing the potential for *C. botulinum* spore outgrowth. To combat with the petitioner perceives as a potential problem with these cheese products, the petitioner has requested that the standards be amended to require the addition of 250 ppm nisin to the finished food. In support of this request, the petitioner has included data from studies, using pasteurized process American cheese spread, demonstrating the effectiveness of nisin in preventing the outgrowth of *C. botulinum* spores and subsequent toxin formation in formulations with varying amounts of emulsifier, with and without added salt.

In a separate action, the petitioner has requested GRAS affirmation of nisin as an ingredient in pasteurized cheese spreads and pasteurized process cheese spreads. Because nisin is a component of a preparation derived from a fermentation culture, the GRAS affirmation documents deals with nisin preparation rather than pure nisin. A final rule responding to this request is published elsewhere in this issue of the **Federal Register.**

FDA has reviewed Arthur A. Checchi, Inc.'s, petition with its supporting data and has concluded that making the use of nisin in the aforementioned cheese spread products mandatory is not necessary to protect the public health. As the petitioner recognizes, typical cheese spread formulations used in the United States result in products which do not support the outgrowth of *C. botulinum* spores. Under these circumstances, a requirement that nisin be used cannot be supported.

The agency, however, recognizes that the potential for *C. botulinum* spore

outgrowth may increase when manufacturers make formulation changes which shift the balance of factors governing the susceptibility of the foods to spore outgrowth and toxin formation; i.e., lower salt content and emulsifier content, and higher moisture content. The agency is therefore proposing to provide for the optional use of nisin in pasteurized process cheese spread (21 CFR 133.179) and, by cross-reference, in pasteurized cheese spread (21 CFR 133.175), pasteurized cheese spread with fruits, vegetables, or meats (21 CFR 133.176), and pasteurized process cheese spread with fruits, vegetables, or meats (21 CFR 133.180) so that manufacturers will have the option to use nisin should they decide to alter their formulation in such a way so as to make their product more susceptible to outgrowth of *C. botulinum* spores, e.g., by reducing the amount of sodium in the finished food. The agency emphasizes that product formulation will determine the amount of nisin necessary for effective inhibition of spore outgrowth and points out that the responsibility for use of an effective amount of this ingredient rests with the manufacturer. The agency, of course, will reevaluate its position regarding the mandatory use of nisin in these products should further research indicate a need to do so.

Manufacturers should note that while use of nisin may result in a cheese spread lower in sodium content than the traditional product, the ingredient in which nisin is carried, nisin preparation, may be high in sodium. Therefore, a product made with nisin preparation may not be sufficiently low in sodium to make any label claims, as described in 21 CFR 101.13, concerning the sodium content of the food, although comparative claims may be made in accordance with the policy explained on page 15521 of the preamble to the sodium labeling final rule (49 FR 15510).

Effective Date

The agency proposes that any final rule that may issue based on this proposal shall become effective 60 days after the date of publication of the final rule in the **Federal Register**.

Economic Impact

In accordance with the Regulatory Flexibility Act (Pub. L. 96-354; 5 U.S.C. 601), FDA has reviewed this proposal to determine its impact on small businesses. The proposal permits the optional use of nisin, an antimicrobial agent, in pasteurized cheese spreads and in pasteurized process cheese spreads. The agency believes that the proposed amendment will result in the standard of identity being less restrictive than it is now, because the amendment will allow pasteurized cheese spread and pasteurized process cheese spread manufacturers more flexibility in formulating their products. Therefore, FDA certifies that this proposed action will not have a significant economic impact on a substantial number of small entities.

Environmental Impact

The agency has determined under 21 CFR 25.24(b)(1) that this action is of a type that does not individually or cumulatively have a significant effect on the human environment. Therefore, neither an environmental assessment nor an environmental impact statement is required.

Comments

Interested persons may, on or before June 6, 1988, submit to the Dockets Management Branch (HFA-305) (address above), written comments regarding this proposal. Two copies of any comments are to be submitted, except that individuals may submit one copy. Comments are to be identified with the docket number found in brackets in the heading of this document. Received comments may be seen in the office above between 9 a.m. and 4 p.m., Monday through Friday.

List of Subjects in 21 CFR Part 133

Cheese, Food standards.

Therefore, under the Federal Food, Drug, and Cosmetic Act and under authority delegated to the Commissioner of Food and Drugs and redelegated to the Director, Center for Food Safety and Applied Nutrition, it is proposed that Part 133 be amended as follows:

PART 133—CHEESES AND RELATED CHEESE PRODUCTS

1. The authority citation for 21 CFR Part 133 continues to read as follows:

Authority: Secs. 401, 701(e), 52 Stat. 1046, 70 Stat. 919 as amended (21 U.S.C. 341, 371(e)); 21 CFR 5.10 and 5.61.

2. Section 133.179 is amended by adding paragraph (f)(11) to read as follows:

§ 133.179 Pasteurized process cheese spread.

* * * * *

(f) * * *

(11) Nisin preparation in an amount which results in not more than 250 parts per million nisin in the food.

* * * * *

Dated: March 25, 1988.

Richard J. Ronk,

Acting Director, Center for Food Safety and Applied Nutrition.

[FR Doc. 88-7460 Filed 4-5-88; 8:45 am]

BILLING CODE 4160-01-M

ENVIRONMENTAL PROTECTION AGENCY

21 CFR Part 561

[FAP 6H5481/P447; FRL-3360-3]

Pesticide Tolerance for Triflumizole

AGENCY: Environmental Protection Agency (EPA).

ACTION: Proposed rule.

SUMMARY: EPA is proposing a feed additive regulation to permit the combined residues of the fungicide triflumizole and its metabolites in or on certain feed items. Uniroyal Chemical Co., Inc., requested this proposal to establish temporary maximum permissible levels for combined residues of triflumizole to permit marketing of certain feed commodities in connection with an experimental use of the fungicide on apples and grapes.

DATE: Comments, identified by the document control number [FAP 6H5481/P447], must be received on or before April 21, 1988.

ADDRESSES: By mail, submit written comments to:

Information Services Section, Program Management and Support Division (TS-757C), Office of Pesticide Programs, Environmental Protection Agency, 401 M Street., SW., Washington, DC 20460.

In person, bring comments to: Room. 246, CM #2, 1921 Jefferson Davis Highway, Arlington, VA 22202.

Information submitted as a comment concerning this notice may be claimed confidential by marking any part or all of that information as "Confidential Business Information" (CBI). Information so marked will not be disclosed except in accordance with procedures set forth in 40 CFR Part 2. A copy of the comment that does not contain CBI must be submitted for inclusion in the public record. Information not marked confidential may be disclosed publicly by EPA without prior notice. All written comments will be available for public inspection in Room. 246 at the address given above, from 8 a.m. to 4 p.m., Monday through Friday, excluding legal holidays.

FOR FURTHER INFORMATION CONTACT: By mail: Registration Division (TS-767C), Attention: Product Manager 21, Office of Pesticide Programs, Environmental Protection Agency, 401 M Street SW., Washington, DC 20460

In person, contact: Lois Rossi (PM 21), Room. 227, CM #2, 1921 Jefferson Davis Highway, Arlington, VA 22202, (703)-557-1900.

SUPPLEMENTARY INFORMATION: On November 18, 1985, Uniroyal Chemical Co., Inc., submitted a feed additive petition (FAP 6H5481) proposing to establish a food/feed additive regulation for the combined residues of the fungicide triflumizole (1-(1-((4-chloro-2-(trifluoromethyl)phenyl)imino)-2-propoxyethyl)-1H-imidazole) and its metabolites containing the 4-chloro-2-trifluoromethyl-aniline moiety (calculated as triflumizole) in or on apples, dried at 3.0 parts per million (ppm), apple pomace, wet at 1.0 ppm, apple pomace, dry at 3.0 ppm, grape juice at 1.0 ppm, grape pomace, wet at 4.0 ppm, grape pomace, dry at 1.0 ppm, raisins at 1.0 ppm, and raisin waste at 2.0 ppm. Subsequently, the petitioner amended its petition on November 14, 1986 and May 12, 1987, to establish tolerances for the fungicide in or on the following commodities as follows: apple pomace at 2.0 ppm, grape pomace at 25.0 ppm, and raisin waste at 8.0 ppm.

A feed additive regulation is being proposed to permit processing of apples and grapes which have been treated in connection with proposed EPA Experimental Use Permit No. 400-EUP-AU.

The scientific data reported and other related material have been evaluated. The toxicological data considered in support of the proposed regulation include the following:

1. A 90-day mouse feeding study with a no-observed effect level (NOEL) of 30 milligrams per kilogram of body weight per day (mg/kg bw/day) (200 ppm) and a lowest effect level (LEL) of 300 mg/kg/day (2,000) ppm. Liver effects were seen.

2. A rat teratology study with an NOEL of 7 mg/kg and an LEL of 35 mg/kg.

3. A rabbit teratology study, no NOEL based on decrease in 24-hour survival.

4. A 1-year dog feeding study with an NOEL of 18.75 mg/kg and an LEL of 187.5 mg/kg (7,500 ppm). Liver and blood effects were seen.

5. A two-generation rat reproduction study with an NOEL of 3.5 mg/kg bw/day (70 ppm) and an LEL of 8.5 mg/kg (170 ppm).

6. A mouse oncogenicity study with an NOEL of 15 mg/kg/day (100 ppm) and an LEL of 60 mg/kg (400 ppm). Liver effects were seen.

7. A mitotic gene conversion study that was negative for mutagenicity.

8. A rec. assay study that was negative for mutagenicity.

9. A reverse mutation in *Salmonella* and *E. coli* study that was negative for mutagenicity.

10. An unscheduled DNA synthesis study that was negative for mutagenicity.

11. A rat chronic feeding/oncogenicity study which is considered supplementary by the Agency. Because focal inflammation and necrosis of the liver was seen at all doses tested, no NOEL was established. For the purpose of the EUP, the Agency put a 1,000-fold safety factor on the lowest dose of the chronic rat study. This dose is 100 ppm or 5 mg/kg, which would give an acceptable daily intake (ADI) of 0.005 mg/kg for the purposes of the EUP, using a 1000-fold safety factor.

The maximum permitted intake (MPI) for a 60-kg human is calculated to be 0.3 mg/day. These proposed tolerances result in a theoretical maximum residue contribution (TMRC) of 0.001805 mg/kg/bw/day (1.5-kg diet) for a 60-kg human and utilize 36 percent of the PADI.

The nature of the residues is adequately understood, and an adequate analytical method is available for enforcement purposes. The method is available from William Gross, EPA, TS-757C, 401 M Street SW., Washington, DC 20460. Request method identified as MRID No. 402272-01.

Based on the information considered, the Agency concludes that the pesticide can be safely used in the prescribed manner when such use is in accordance with the label and labeling accepted in connection with the experimental use permit issued pursuant to the Federal Insecticide, Fungicide, and Rodenticide Act (FIFRA), as amended (86 Stat. 973, 7 U.S.C. 136 *et seq.*), and the regulation is proposed as set forth below.

Interested persons are invited to submit written comments on the proposed regulation. Comments must bear a notation indicating the document control number, [FAP 6H5481/P447]. All written comments filed in response to this document will be available in the Information Services Section at the address given above from 8 a.m. to 4 p.m., Monday through Friday, except legal holidays.

The Office of Management and Budget has exempted this proposed rule from the requirements of section 3, of Executive Order 12291.

Pursuant to the requirements of the Regulatory Flexibility Act (Pub. L. 96-354, 94 Stat. 1164, 5 U.S.C. 601-612), the Administrator has determined that regulations establishing new food and feed additive levels, or conditions for safe use of additives, or raising such food and feed additive levels do not have a significant economic impact on a substantial number of small entities. A certification statement to this effect was published in the **Federal Register** of May 4, 1981 (46 FR 24950).

List of Subjects in 21 CFR Part 561

Animal feeds, Pesticide and pests, Reporting and recordkeeping requirements.

Dated: March 24, 1988.

Edwin F. Tinsworth,

Director, Registration Division, Office of Pesticide Programs.

Therefore, it is proposed that Part 561 be amended as follows:

PART 561—[AMENDED]

1. The authority citation for Part 561 continues to read as follows:

Authority: 21 U.S.C. 348.

b. By adding new § 561.444, to read as follows:

§ 561.444 Triflumizole.

A feed additive regulation is established to permit residues of the fungicide triflumizole (1-(1-((4-chloro-2-(trifluoromethyl)phenyl)imino)2-propoxyethyl)-1H-imidazole) and its metabolites containing the 4-chloro-2-trifluoromethyl-aniline moiety (calculated as triflumizole) in or on the following processed feeds when present therein as a result of application to grapes and apples in connection with an experimental use program, as follows:

Feeds	Parts per million
Apple pomace	2.0
Grape pomace	25.0
Raisin waste	8.0

[FR Doc. 88-7377 Filed 4-5-88; 8:45 am]

BILLING CODE 6560-50-M

40 CFR Part 52

[FRL-3361-2]

Approval and Promulgation of Implementation Plans; California; South Coast, Cement Kilns, Nitrogen Oxides (NOx)

AGENCY: Environmental Protection Agency (EPA).

ACTION: Notice of proposed rulemaking.

SUMMARY: EPA solicits comments on a proposal to disapprove a South Coast Air Quality Management District (SCAQMD) cement plant kiln rule affecting NOx. The rule was submitted as a revision to the California State Implementation Plan (SIP) to attain the National Ambient Air Quality Standard (NAAQS) for nitrogen dioxide (NO2). This EPA action, authorized under Clean Air Act (CAA) section 110, is intended to provide states with federally enforceable regulations for the attainment and maintenance of the NAAQS. The disapproval of SCAQMD Rule 1112, is revised on June 6, and submitted to EPA on October 10, 1986, as proposed on a number of independent grounds: (1) The rule is not stringent enough to provide for expeditious attainment, and fails to require reductions from current NOx levels; (2) it constitutes a breach of the commitment in the overall plan the state submitted to reduce by 40 percent NOx emissions from cement plants; (3) it is unenforceable; (4) there is no technical demonstration of attainment to support it. The EPA-approved rule was submitted to satisfy a nonattainment area plan (NAP) commitment for 40% NOx emission reduction from cement plant kilns, adopted by the State and SCAQMD and approved by EPA. The new rule fails to meet this reduction commitment. This disapproval is necessary if the NAAQS is to be attained as expediously as practicable.

DATES: Written comments may be submitted up to June 6, 1988.

ADDRESSES: Comments may be sent to Morris I. Goldberg at the EPA Regional Office address listed below. Copies of EPA's technical evaluation report and other pertinent documents are available for public inspection during normal business hours at the EPA Region 9 office and at the following locations:

South Coast Air Quality Management District (SCAQMD), 9150 Flair Drive, El Monte, CA 91731

California Air Resources Board (ARB), 1102 "Q" Street Sacramento, CA 95814.

FOR FURTHER INFORMATION CONTACT: Morris I. Goldberg, State Implementation Plan Section, Air Management Division (A-2-3), U.S. Environmental Protection Agency, Region 9, 215 Fremont Street, 1st Floor, San Francisco, CA 94105, Telephone No. (415) 974-8213, FTS 454-8213.

SUPPLEMENTARY INFORMATION:

Background

On March 3, 1978 (43 FR 8970) California's South Coast Air Basin (SCAB) was identified as a nonattainment area for NO2. On July 25, 1979 the ARB adopted and submitted an Air Quality Management Plan (AQMP), produced by the SCAQMD, to EPA for approval.

On January 21, 1981 (46 FR 5979) EPA approved portions of the AQMP and promulgated a condition of approval at 40 CFR 52.232(a)(3)(iv)(E) which required the submittal of a commitment and schedule to develop and adopt NOx control measures and a commitment to implement those control measures necessary to provide for attainment.

On September 4, 1981, after extensive study and meetings with the public and industry, the ARB published a lengthy report, "Suggested Control Measures for the Control of Emissions of Oxides of Nitrogen from Cement Kilns" (SCM). The report established that the actual 1980 SCAB emissions from the four uncontrolled grey kilns in the basin were 10.3 tons NOx/day and that the average emission level was at 5.2 pounds of NOx/ton of clinker produced (lb/ton). The report concluded that a 3.1 lb/ton limit for kilns without waste-heat recovery, representing 38% reduction over uncontrolled basin-wide NOx emission levels, was both "technologically feasible and cost effective."

On December 24, 1981, ARB submitted a revised AQMP for the SCAB which included a commitment and schedule for the development, adoption and implementation of a regulation which would reduce NOx emissions from cement kilns in the basin by 40% from the amount actually emitted in 1980.

On January 8, 1982 the SCAQMD adopted Rule 1112 which required that NOx emissions from portland cement plant kilns in the SCAB be reduced to the 3.1 lb/ton limit in the absence of waste heat recovery, as recommended by the ARB, (averaged over 3 hours, or averaged over 24 hours with the use of continuous emission monitoring (CEMS)). The 3.1 lb/ton limit was derived from the 5.2 lb/ton average uncontrolled emissions figure, or "baseline," which was calculated by the ARB. At the hearing, California Portland Cement Company (CPCC) testifed that the 5.2 lb/ton baseline was "very close to what we had tested." (June 8, 1982 SCAQMD Hearing, Testimony of David Cahn, p. 49.) The 38% emission reduction, expected to be achieved through the implementation of the rule, was derived from the amount of control needed by the one source, Riverside Cement Company (RCC), affected by the 3.1 lb/ton limit. Approximately 71% control would be required of the RCC kilns, while 0% control would be required from CPCC kilns, which were expected to employ waste heat recovery and thus would be exempt from the 3.1 limit under the rule cited. The ARB's SCM found control technologies capable of 70 to 90% reduction in use in other combustion process industries. Thus, EPA believes these technologies were reasonably available for control of combustion process NOx emissions, although most had not been employed in the cement industry. Rule 1112 also provided for a hearing in January 1984 to consider a possible adjustment to the limits or to the rule's July 1, 1984 final compliance date.

On April 13, 1982 (47 FR 15788) EPA removed the condition of approval of the AQMP and approved the 40% commitment submitted on December 24, 1981.

On May 20, 1982, the ARB submitted Rule 1112 to EPA as a SIP revision for approval as a federally enforceable rule consistent with the 40% reduction commitment.

After the SCAQMD's adoption and the ARB's approval of Rule 1112 in 1982, RCC modified one of the kilns at its Crestmore facility as part of a NOx reduction demonstration project. The combustion modifications utilized by RCC included several recommended by the ARB in the SCM; specifically controlling excess air, burner modifications, and indirect coal firing. However, RCC did not employ any of the process modifications or other add-on technologies suggested in the SCM as being capable of achieving a total of 71% control.

On March 24, 1983 (48 FR 12108) EPA proposed to approve the SCAQMD's 1982 rule. However, EPA did not take final action prior to January 6, 1984, when the SCAQMD held a public hearing and revised the rule. At this hearing, SCAQMD extended the date of the rule review hearing to January 1986, and extended the date for final compliance to July 1986. No other changes were made. On April 19, 1984 the ARB submitted this rule (the 1984 rule) to EPA for approval.

On January 7, 1986 (51 FR 600) EPA approved the 1984 rule which limited NOx from Portland cement plant kilns to 38% of the amount actually emitted in 1980 ("1984 Rule"). EPA responded to numerous comments, including those regarding technological feasibility, interim limitations, the baseline NOx emission value, the impact on violation areas, the role of NOx control on attainment of the particulate matter and ozone NAAQS and its effect on visibility and acid rain, and others.

Two years prior to this action, EPA wrote a letter to the Governor of

California on February 24, 1984, pursuant to section 110(a)(2)(H) of the Clean Air Act. The letter required the SCAQMD to revise its plan for attaining the NO2 NAAQS by February 24, 1985 because the South Coast Air Basin had failed to meet the 1982 CAA attainment deadline.

On April 25, 1985, the ARB adopted a resolution (No. 85-29) regarding NOx control. The ARB found that "continued control of NOx emissions in the South Coast Air Basin at current or more stringent levels is needed to prevent adverse air quality impacts on concentrations of NO_2, ozone and particulate matter" On May 17, 1985 the SCAQMD Board adopted a similar resolution.

On January 24, 1986, the SCAQMD held a public hearing to review the EPA-approved Rule 1112. At this hearing the District indicated that it was going to revise the rule, based largely on information submitted by the cement industry. The industry expressed concern at this hearing that the baseline used to develop the 3.1 lb/ton emission limit was faulty. The industry submitted a recalculation of the pre-1982 data which indicated that the pre-1982 baseline figure was actually 7.8 lb/ton, a much higher uncontrolled emissions average level than the ARB's 5.2 lb/ton figure. The industry also submitted that only a 26% reduction from the recalculated pre-1982 emission level is feasible. This conclusion was based on a comparison of the mean of the emission measurements made during the RCC demonstration project at its Crestmore facility (5.8 lb/ton) to the industry recalculated baseline (7.8 lb/ton).

In March 1986 RCC and CPCC filed petitions for review of EPA's final approval of Rule 1112 in the United States Court of Appeals for the Ninth Circuit. In April 1986, the petitioners requested a stay of the effective date of the EPA approval, pending either final EPA consideration of the new limit about to be proposed by SCAQMD or the Court's final decision on the petitions for review. EPA opposed the motion and the Court denied the petitioners' motion, and ordered a stay in briefing petitioners' appeal. That stay has expired and the case is in the briefing process, as of this writing.

EPA informed SCAQMD in a May 7, 1986 letter that the information submitted at the January 24, 1986 hearing did not appear to support a revision of Rule 1112. EPA noted that the increase in the baseline to 7.8 lb/ton seemed unreasonable on technical grounds and since industry data, consisting of over 50 hours of stack test data supported the original 5.2 lb/ton baseline. The ARB expressed similar concerns to the SCAQMD in a May 30, 1986 letter. The ARB noted that if SCAQMD's proposed rule was adopted, the projected emission rate could increase "by about 6 to 7 tons per day," and further that this would represent a substantial weakening of the SIP. The ARB also echoed EPA's concern that the information submitted at the January 1986 hearing did not support the proposed rule, and further that the proposal presented very difficult enforcement problems.

Nevertheless on June 6, 1986 SCAQMD revised Rule 1112 ("1986 Rule"). The emission limit was relaxed from 3.1 lb/ton NOx, 24-hour average, to 11.6 lb/ton, 24-hour average, and 6.4 lb/ton, 30-day average. The 1986 Rule also contains an alternative emission control plan option. The July 1, 1986 compliance date and the waste-heat exeption were unchanged from the EPA-approved version of the rule. The SCAQMD asserted that this revision would produce a 26% reduction from pre-1982 emission levels. No evidence was provided at the January 1986 hearing by the cement companies or any other party that the control technologies listed in the 1981 ARB Suggested Control Measures report (SCM), on which the EPA-approved rule was based, were technologically or economically unsuitable for the subject kilns.

On July 1, 1986, EPA requested the ARB and SCAQMD to revise the December 13, 1985 AQMP prepared in response to EPA's February 24, 1984 letter. EPA asked that the revision include additional control measures because the 1985 annual air quality data indicated that the NO_2 problem had worsened since 1983 and 1984. The December 1985 AQMP stated that the existing control strategy was adequate to attain the NAAQS, and that, therefore, no rules would be relaxed or added. In April 1986, however, EPA prepared an estimate of actual 1985 emissions in the basin and compared it to the ratio of measured 1985 annual air quality data and the NAAQS. The result of this analysis indicated the need for further controls on NOx sources for the attainment of native emission control plan option. The July 1, 1986 compliance the NO_2 NAAQS in the SCAB before 1995. Since that time, the 1986 NO_2 annual average air quality data has shown that the air quality is continuing to degrade.

ARB officially submitted the relaxed Rule 1112 to EPA for consideration as a SIP revision on October 10, 1986. ARB did not explain its concerns expressed in its May 30, 1986 letter had been resolved or in what manner.

On May 15, 1987, EPA wrote to the ARB asking it to withdraw the 1986 SCAQMD revision of Rule 1112. EPA stated in this letter that it could not approve the proposed revision because it is a significant relaxation of the existing rule, does not fulfill the 40% reduction commitment, and was submitted without a technical demonstration of attainment of the NO_2 NAAQS. On June 25, 1987, the ARB responded that it would not withdraw the proposed revision based largely on its conclusion that the pre-1982 baseline figure of 5.2 lb/ton was too low and that the recalculation of the pre-1982 baseline was more accurate.

Evaluation

After a careful review of the record to date, EPA proposes to disapprove the rule because it is a breach of the SIP commitment to reduce NOx emissions, and unsupported relaxation from the applicable SIP limits, appears unenforceable, and was submitted without a demonstration of attainment. This record includes the source test data, the contractual studies, the baseline emission data, ARB's binding commitment to reduce actual NOx cement plant kiln emissions by 40% in the South Coast Air Basin, and the resolutions adopted by the ARB and SCAQMD Boards, and testimony before the SCAQMD at various hearings.

The 1986 SCAQMD Rule 1112 is flawed in a number of independent respects. First, it would effect no reduction in emissions from cement kilns. Second, it is essentially unenforceable. Third, it was submitted without any demonstration that it would not adversely affect attainment of the NAAQS for NOx. Lastly, it represents a significant and unsupported relaxation of the current emission limit. Each of these grounds standing alone is sufficient to warrant disapproval of the rule.

The 1986 Rule Would Require No Emissions Reductions

Since 1982 RCC has conducted a "demonstration project" on one of the kilns at its Crestmore facility. It has adopted several of the combustion modificants suggested by the SCM. Emissions tests conducted on this kiln indicate that the current average NO2 emission level is 5.8 lb/ton.

The SCAQMD accepted the 5.8 lb/ton figure as the new mean emission level for purposes of the 1986 revised rule. The limit, 11.6 lb/ton, is much greater than the 5.8 lb/ton average, since it represents the high end of emissions currently being produced at the already

modified kiln. Instead of representing a reduction from the baseline emissions, the relaxed rule effectively establishes an emissions limit at or above the status quo, thereby allowing for a potential increase in emissions and requiring no process modifications by the cement industry.

The SCAQMD and the ARB rationale for requiring no process controls from the cement industry is apparantly that no other control technologies are available. The ARB has failed, however, to establish this lack of technology. In its 1981 SCM report, the ARB listed a number of technologies that have been demonstrated to be reasonably available for the control of NOx in other industries in the SCAB. These include selective catalytic or non-catalytic reduction, and process modifications such as raw feed additives and pre-heating raw food.

Apparently SCAQMD, ARB and the cement companies failed to consider any of these options, beyond the combustion modifications adopted at the RCC kiln at Cestmore which produce highly variable emissions and intermittent emission reductions. Nothing submitted to EPA in support of the 1986 relaxed rule addresses this lack of consideration.

Modifications Have Not Decreased Emissions

The SCAQMD has adopted the conclusion of the cement industry, submitted in testimony during the January 24, 1986 hearing, that the combustion modifications already adopted by RCC have resulted in a 26% reduction of NO_X from one RCC kiln.

EPA's analysis of the data indicates that this conclusion is erroneous. The 26% reduction was apparently obtained by recalculating the uncontrolled pre-1982 baseline to 7.8 lb/ton, and by using it to calculate the percent reduction to the current 5.8 lb/ton mean's emission level.

EPA believes, however, that SCAQMD's reliance on the industry's recalculation of the pre-1982 baseline figure was inappropriate. The existing rule was based on a pre-1982 baseline of 5.2 lb/ton. SCAQMD relied upon a recalculation of the pre-1982 baseline figure which used data developed during that period which was excluded from the original baseline calculation. The recalculation of the pre-1982 baseline figure (7.8 lb/ton) is based on six emissions tests conducted over different periods of time. Only three of the RCC tests were conducted over periods comparable to the averaging times established by the rule. One 3-hour test resulted in 4.33 lb/ton and two 24-hour tests resulted in emissions of 4.42 and 5.3 lb/ton. The average of these three tests produces a 4.7 lb/ton baseline fugure. The recalculation also included the results of three tests of less than an hour duration. This short-term data, reflecting only 30, 45 and 50 minute tests, contained "spikes" of high NO_X emissions, 13.99, 14.32 and 8.78 lb/ton respectively. These figures, which do not reflect the averaging times established by the rule, severely skew the baseline figure upward to the 7.8 lb/ton baseline figure used by SCAQMD. See discusison in Technical Evaluation Report (October, 1987) at pp. 2–4.

SCAQMD's new process for calculating the baseline figure appears inappropriate and represents an unexplained reversal of SCAQMD's earlier endorsement of the data and process used to calculate the original 5.2 lb/ton baseline figure, upon which the current 3.1 lb/ton limit is based. Nothing submitted to EPA in connection with the proposed rule invalidates or discredits the data or process used to calculate the 5.2 lb/ton baseline.

Proposed Rule is Unenforceable

The 1986 SCAQMD Rule 1112 also has significant enforcement problems because it is vague and ambiguous. The rule fails to specify the method of averaging, rolling or block, which should be used to calculate emission and clinker production data. The rule also fails to establish minimum operating and recordkeeping requirements for the CEMS compliance method. The EPA-approved rule provides for the use of non-continuous in-stack testing to measure compliance.

The 1986 SCAQMD rule does not specify alternate data recovery requirements to be implemented whenever the CEMS is not operating. The 1986 SCAQMD Rule 1112 also fails to establish procedures for handling the lengthy start-up and shut-down periods, or upset-breakdown periods, in extended averaging situations. See Technical Evaluation Report at 4–5.

Failure to Establish Attainment of the NAAQS

Finally the proposed revision to Rule 1112 was submitted without any technical demonstration of attainment of the NAAQS for NO_2. See Technical Evaluation Report at 6.

Relaxation of the SIP Limit

The EPA-approved Rule 1112 sets an emission limit of 3.1 lb/ton, native emission control plan option. The July 1, 1986 compliance based on a 3-hour average, or based on a 24-hour average with CEMS. The 1986 SCAQMD Rule 1112 would relax this limit to 11.6 lb/ton based on a 24-hour average with CEMS, and 6.4 lb/ton based on a 30-day average with CEMS. As an alternative option, the 1986 Rule would allow emissions from all kilns to be averaged through an alternative emission contorl plan. This plan would require only the approval of the SCAQMD Executive Officer. The 1986 SCAQMD Rule 1112 in either form is, on its face, a significant relaxation from the current 3.1 lb/ton limit. But even if this were not the case, the previously cited grounds provide ample independent reasons to disapprove the 1986 rule.

Proposed Action

This notice proposes to disapprove the June 6, 1986 SCAQMD Rule 1112 submitted as a SIP revision to EPA on October 10, 1986. This proposal would leave unchanged EPA's previous action on the version of Rule 1112 adopted by the SCAQMD on January 6, 1984, submitted to EPA as a SIP revision by the ARB on April 19, 1984 and approved by EPA on January 7, 1986.

Regulatory Process

Under 5 U.S.C. 605(b), I certify that this action will not have a significant economic impact on a substantial number of small entities (46 FR 8709). Although this action proposes to disapprove a part of the California SIP, no additional requirements are proposed through this action, as the SCAQMD has previously adopted and EPA previously approved a more stringent rule for such sources.

Under Executive Order 12291, this action is not "Major". It has been submitted to the Office of Management and Budget (OMB) for review.

List of Subjects in 40 CFR Part 52

Air pollution control, Nitrogen dioxide.

Authority: 42 U.S.C. 7401–7642.

Dated: October 21, 1987.

John Wise,

Acting Regional Administrator.

[FR Doc. 88–7509 Filed 4–5–88; 8:45 am]

BILLING CODE 6560-50-M

DEPARTMENT OF THE INTERIOR

Bureau of Land Management

43 CFR Part 3160

[AA-630-08-4211-02]

Onshore Oil and Gas Operations; Federal and Indian Oil and Gas Leases, Onshore Oil and Gas Order No. 4, Measurement of Oil, and Onshore Oil and Gas Order No. 5, Measurement of Gas; Extension of Comment Period

AGENCY: Bureau of Land Management, Interior.

ACTION: Notice of extension of comment period.

SUMMARY: Proposed rulemakings that would issue Onshore Oil and Gas Orders No. 4 and 5 under 43 CFR Part 3160 were published in the **Federal Register** on February 3, 1988 (53 FR 3158 and 3168), with a 60-day comment period. The comment period is being extended to April 19, 1988, in response to public requests. Notice is hereby given that the comment period for the proposed rulemaking issuing oil and gas orders No. 4 and 5 is extended to April 19, 1988.

DATE: The period for the submission of comments is hereby extended to April 19, 1988. Comments received or postmarked after this date may not be considered as part of the decisionmaking process on issuance of the final rulemakings.

ADDRESS: Comments should be sent to: Director (140), Bureau of Land Management, Room 5555, Main Interior Building, 1800 C Street NW., Washington, DC 20240.

FOR FURTHER INFORMATION CONTACT: Richard T. Hunter, (303) 236-1787, or Sie Ling Chiang, (202) 653-2127, or Ted R. Hudson, (202) 343-8735.

J. Steven Griles,

Assistant Secretary of the Interior.

[FR Doc. 88-7496 Filed 4-5-88; 8:45 am]

BILLING CODE 4310-84-M

DEPARTMENT OF ENERGY

Office of the Secretary

48 CFR Parts 916, 931 and 952

Acquisition Regulation Concerning Cost Principles on Contractor Travel Costs

AGENCY: Office of the Secretary, DOE.

ACTION: Notice of proposed rulemaking.

SUMMARY: The Department of Energy (DOE) proposes to amend the Department of Energy Acquisition Regulation (DEAR), Chapter 9 of the Federal Acquisition Regulations system, in order to describe the contractor employee travel expense limitations that will apply to DOE contracts awarded to state and local governments, educational institutions, nonprofit organizations, and state, local or Federally recognized Indian tribal government, as established by the Federal Civilian Employee and Contractor Travel Expense Act of 1985 (Pub. L. 99-234). The rule, when final, will establish consistent application of Pub. L. 99-234 to all DOE contractors.

DATE: Written comments should be submitted no later than May 6, 1988.

ADDRESSES: Comments should be addressed to: U.S. Department of Energy, James J. Cavanagh, Director, Business and Financial Policy Division (MA-422), 100 Independence Avenue SW., Washington, DC 20585.

FOR FURTHER INFORMATION CONTACT:

Rudolph J. Schuhbauer, Business and Financial Policy Division, (MA-422), Procurement and Assistance Management Directorate, Washington, DC 20585, (202) 586-8175.

Mary L. Bosch, Office of the Assistant General Counsel for Procurement and Financial Incentives, (GC-34), Washington, DC 20585, (202) 586-1526.

SUPPLEMENTARY INFORMATION:

I. Background
II. Procedural Requirements
A. Review Under Executive Order 12291
B. Review Under the Regulatory Flexibility Act
C. Paperwork Reduction Act
D. National Environmental Policy Act
E. Public Hearing
III. Public Comments

I. Background

DOE is proposing to amend the DEAR to ensure that reimbursements for contractor employee travel expenses under DOE contracts placed with educational institutions, nonprofit organizations and State, local and Federally recognized Indian tribal governments are compatible and consistent with existing statutory requirements. Title II, Travel Expenses of Government Contractors, of Pub. L. 99-234 provides, in part, that "[u]nder any contract with any executive agency, costs incurred by contractor personnel for travel, including costs of lodging, other subsistence, and incidental expenses, shall be considered to be reasonable and allowable only to the extent that they do not exceed the rates and amounts set by subchapter I of chapter 57 of title 5, United States Code, or by the Administrator of General Services or the President (or his designee) pursuant to any provision of such subchapter." Referenced subchapter I (5 U.S.C. 5700), at 5 U.S.C. 5702, generally provides that when traveling on official business a Federal employee is entitled to a per diem allowance or actual expense reimbursement not to exceed the rates and amounts established in applicable regulations by the Administrator of General Services and that for travel consuming less than a full day, the payment prescribed by regulation shall be allocated in such manner as the Administrator may prescribe.

To implement the new statutory limits imposed on Federal travelers by Title 1, Travel Expenses of Federal Civilian Employees, of Pub. L. 99-234, appropriate amendments to the Federal Travel Regulations were published by the General Services Administration on May 30, 1986 (51 FR 19660) and were further amended on July 15, 1987 (52 FR 26630), with regard to the reimbursement of a Federal traveler's subsistence expenses. The Federal Travel Regulations currently provide that payments to Federal travelers may not exceed the employee's actual cost of lodging, up to specified lodging maximums, plus a specified meals and incidental expense allowance, allocated within prescribed limitations, for a full travel day and require the payment of lesser amounts for travel days where an employee does not require lodging and/or a full day's meals and incidental expense allowance, e.g., on the day of departure and day of return.

The requirements of Pub. L. 99-234 for contractor travel were implemented in the Federal Acquisition Regulation (FAR) travel cost principle applicable to commercial organizations which was published as a notice for public comment in the **Federal Register** on May 30, 1986 (51 FR 19690) and as a final rule on July 31, 1986 (51 FR 27488). The existing FAR cost principle provisions for commercial organizations are intended to apply to the classes of contractors to which this proposed rule would be applicable.

Although the cited statute applies the same travel cost limitations to contracts in general, and makes no reference to awardee type, the FAR failed to mention the application of the law to contracts with educational institutions and nonprofit organizations, or to State, local and Federally recognized Indian tribal governments. This is because appropriate modifications were expected to be made to OMB Circulars A-21, A-122 and A-87, respectively. Notwithstanding all these administrative documents, the law has established the applicable principles which have been in effect in excess of

two years. It should be noted that the contractor travel cost limitations were established by law with no flexibility provided for administrative changes. As such there is no room for debate as to the wisdom of the law, or the need to implement it. In order to harmonize the DEAR to the recently enacted statutory requirements, DOE is issuing this proposed rule.

II. Procedural Requirements

A. Review Under Executive Order 12291

This Executive Order, entitled "Federal Regulations," requires that certain regulations be reviewed by OMB prior to their promulgation. Bulletin 85-7 exempts all but certain types of procurement regulations from such review. This proposed rule does not involve any of the topics requiring prior review under the Bulletin and is accordingly exempt from such review.

B. Review Under the Regulatory Flexibility Act

This proposed rule was reviewed under the Regulatory Flexibility Act of 1980, Pub. L. 96-354, which requires preparation of a regulatory flexibility analysis for any rule which is likely to have significant economic impact on a substantial number of small entities. This rule will have no impact on interest rates, tax policies or liabilities, the costs of goods or services or other direct economic factors. It will not have a signficant economic impact on a substantial number of small entities and, therefore, no regulatory flexibility analysis has been prepared.

C. Paperwork Reduction Act

This proposed rule may impose some additional recordkeeping requirements. Since the information collected moves directly from the contractor to the GSA, responsibility for recordkeeping and paperwork burden remains with GSA. DOE has requested an OMB control number from GSA.

D. National Environmental Policy Act

DOE has concluded that promulgation of this proposed rule would not represent a major Federal action having significant impact on the human environment under the National Environmental Policy Act (NEPA) of 1969 (42 U.S.C. 432 *et seq.*, 1976), or the Council on Environmental Quality regulations (40 CFR Part 1020), and therefore does not require an environmental impact statement or an environmental assessment pursuant to NEPA.

E. Public Hearing

The Department has concluded that this proposed rule does not involve a substantial issue of fact or law and that the proposed rule should not have a substantial impact on the nation's economy or large numbers of individuals or business. Therefore, pursuant to Pub. L. 95-91, the DOE Organization Act, the Department does not plan to hold a public hearing on this proposed rule.

III. Public Comments

Interested persons are invited to participate by submitting data, views or arguments with respect to the proposed DEAR amendments set forth in this notice. All comments received on or before the date specified in the beginning of this notice and all other relevant information will be considered by DOE before taking final action on the proposed regulation changes. DOE will make best efforts to consider any late comments as well.

List of Subjects in 48 CFR Parts 916, 931 and 952

Government procurement.

For the reasons set out in the preamble, Chapter 9 of Title 48 of the Code of Federal Regulations is proposed to be amended as set forth below.

Issued in Washington, DC, on March 28, 1988.

Berton J. Roth,

Director, Procurement and Assistance Management Directorate.

1. The authority citation for Parts 916, 931 and 952 will continue to read as follows:

Authority: 42 U.S.C. 7254; 40 U.S.C. 486(c).

PART 916—[AMENDED]

2. Section 916.307 is amended by adding paragraph (a) to read as follows:

916.307 Contract clauses.

(a) The clause at FAR 52.216-7, Allowable Cost and Payment, as prescribed at FAR 16.307(a), shall be further modified as follows:

(1) When contracting with a commercial organization, modify paragraph (a) of the clause at FAR 52.216-7 by adding the phrase, "as supplemented by Subpart 931.2 of the Department of Energy Acquisition Regulation (DEAR)," after the acronym "(FAR)."

(2) If the contract is with an educational institution, modify paragraph (a) of the clause at FAR 52.216-7 by adding the phrase, "as supplemented by Subpart 931.3 of the Department of Energy Acquisition Regulation (DEAR)," after the acronym "(FAR)."

(3) If the contract is with a State, local or Federally recognized Indian tribal government, modify paragraph (a) of the clause at FAR 52.216-7 by adding the phrase, "as supplemented by Subpart 931.6 of the Department of Energy Acquisition Regulation (DEAR)," after the acronym "(FAR)."

(4) If the contract is with a nonprofit organization other than an educational institution, a State, local, or Federally recognized Indian tribal government, or a nonprofit organization exempted under OMB Circular No. A-122, modify paragraph (a) of the clause at FAR 52.216-7 by adding the phrase, "as supplemented by Subpart 931.7 of the Department of Energy Acquisition Regulation (DEAR)," after the acronym "(FAR)."

* * * * *

PART 931—[AMENDED]

3. Part 931 is amended by adding Subparts 931.3, 931.6 and 931.7 to read as follows:

Subpart 931.3—Contracts with Educational Institutions

931.303 Requirements.

(c) The reasonableness and allowability of travel costs claimed for reimbursement under the contract for the cost of lodging, meals and incidental expenses incurred by contractor employees shall be subject to the travel cost principles at FAR 31.205-46(a) in lieu of OMB Circular A-21, Section J.43, paragraph a.

Subpart 931.6—Contracts with State, Local, and Federally Recognized Indian Tribal Governments

931.603 Requirements.

(c) The reasonableness and allowability of travel costs claimed for reimbursement under the contract for the costs of lodging, meals and incidental expenses incurred by contractor employees shall be subject to the travel cost principles at FAR 31.205-46(a) in lieu of OMB Circular A-87, Attachment B, paragraph B-28, Travel.

Subpart 931.7—Contracts with Nonprofit Organizations

931.703 Requirements.

(c) The reasonableness and allowability of travel costs claimed for reimbursement under the contract for the costs of lodging, meals and incidental expenses incurred by contractor employees shall be subject to

the travel cost principles at FAR 31.205-46(a) in lieu of OMB Circular A-122, Attachment B, Section 50, paragraph a.

PART 952—[AMENDED]

4. Section 952.216-7 is revised to read as follows:

952.216-7. Allowable cost and payment.

Insert the clause at FAR 52.216-7 as prescribed in FAR 16.307(a) and as supplemented by 916.307(a).

[FR Doc. 88-7408 Filed 4-5-88; 8:45 am]

BILLING CODE 6450-01-M

DEPARTMENT OF TRANSPORTATION

Research and Special Programs Administration

49 CFR Parts 171 and 173

[Docket No. HM-166V; Notice No. 88-2]

Hazardous Materials; Uranium Hexafluoride

AGENCY: Research and Special Programs Administration (RSPA), DOT.

ACTION: Notice of proposed rulemaking; supplemental proposals.

SUMMARY: By these supplemental proposals to the Notice of Proposed Rulemaking (NPRM; Notice No. 87-7) published in the **Federal Register** on July 6, 1987 (52 FR 25342), RSPA is proposing to amend the Hazardous Materials Regulations (HMR) to permit the transport of uranium hexafluoride (UF_6) in packagings that meet the requirements of American National Standard N14.1-1987 (ANSI N14.1-1987), and to permit the transport of depleted UF_6 in packagings filled to a capacity not exceeding 62% by volume at 70 °F. This action is necessary to permit the design and fabrication of UF_6 packaging in accordance with the latest revision of ANSI N14.1, and to increase the filling limit of packages of depleted UF_6 from 61% to 62% of the volumetric capacity.

DATE: Comments must be received on or before May 6, 1988.

ADDRESS: Address comments to Dockets Unit, Office of Hazardous Materials Transportation, U.S. Department of Transportation, Washington, DC, 20590. Comments should identify the docket and notice and be submitted, if possible, in 5 copies. Persons wishing to receive confirmation of receipt of their comments should include a self-addressed stamped postcard. The Dockets Unit is located in Room 8426 of the Nassif Building, 400 Seventh Street SW., Washington, DC, 20590. Office hours are 8:30 a.m. to 5:00 p.m., Monday through Friday.

FOR FURTHER INFORMATION CONTACT: Michael E. Wangler, Chief, Radioactive Materials Branch, Technical Division, Office of Hazardous Materials Transportation, U.S. Department of Transportation, 400 Seventh Street SW., Washington, DC 20590. (202) 366-4545.

SUPPLEMENTARY INFORMATION:

Background

On July 6, 1987, RSPA published a notice of proposed rulemaking (NPRM; Notice 87-7) in the **Federal Register** (52 FR 25342) which proposed to permit the transport of uranium hexafluoride (UF_6) in packagings not meeting either the requirements of American National Standard N14.1-1982 (ANSI N14.1-1982), or the specifications for DOT Class 106A multi-unit tank car tanks, provided the packagings were designed, fabricated and marked in accordance with an earlier edition of the ANSI N14.1 standard, or Section VIII, Division I of the American Society of Mechanical Engineers (ASME) Code. In addition, the packagings had to meet the mimimum wall thickness requirements, and be used within their original design specifications. Finally, the packagings would be subject to the periodic testing and marking requirements of § 173.420(b). RSPA took this action to permit the continued use of more than 50,000 existing packagings that had been used safely for the transport of UF_6. The proposed regulation will ensure that the packagings have been manufactured in accordance with an acceptable standards. RSPA believes that these controls are necessary to ensure an acceptable level of safety.

At the time of the publication of Notice 87-7, the new American National Standard 14.1-1987 (ANSI N14.1-1987) had not been approved by the ANSI Committee. However, on November 19, 1987, RSPA was notified that the ANSI Board of Standards Review had approved ANSI N14.1-1987 with an effective date of October 30, 1987. RSPA believes that it is now appropriate to consider incorporation of the new ANSI N14.1 standard.

One area of interest in ANSI N14.1-1987 is the establishment of standards for a type of packaging to be used primarily for the transportation and storage of depleted UF_6. The packagings will have a nominal diameter of 48 inches and a wall thickness of 0.25 inch. The packagings must meet specified service pressure requirements and must be marked in accordance with Section VIII, Division I of the ASME Code. Although this type of packaging has been used by the industry for storage for many years, it has not been specifically covered by previous editions of ANSI N14.1 for use in transport. Incorporation of ANSI N14.1-1987 would also allow the use of existing and newly manufactured packaging of this type.

Another issue of interest is that unlike previous ANSI N14.1 standards, ANSI N14.1-1987 recognizes that a wide variety of packagings are currently in service, although not specifically covered by an ANSI N14.1 standard, and may be acceptable for service, provided the packagings are used within their original design limitations and are inspected, tested, and maintained, in conformance with ANSI N14.1-1987. RSPA's proposal, in § 173.420(a)(2)(iv), may be more limited in scope than the packagings addressed in ANSI N14.1. Comments are requested concerning the need, if any, to "grandfather" any categories of packagings not addressed in proposed § 173.420.

RSPA has reviewed ANSI N14.1-1987 and has found this standard to be acceptable for incorporation by reference and, therefore, proposes to incorporate this document in its entirety In addition to the incorporation of ANSI N14.1-1987, RSPA proposes to permit the shipment of packages containing depleted UF_6 up to a filling capacity not exceeding 62% by volume. The current fill limit of 61% of the volumetric capacity was promulgated by RSPA on November 18, 1986 (51 FR 41632), and was derived from Table 1 of ANSI N14.1-1982. Prior to that time, the Department of Energy (DOE) had filled over 6000 cylinders with depleted UF_6 to about 62% of the capacity of the packaging. DOE had based its fill limit on one of its internal documents, ORO-651. ANSI N14.1-1982 did not specifically address fill limits for depleted UF_6. However, the new ANSI N14.1-1987 indicates that a fill limit of 62% is acceptable for packagings containing depleted UF_6. Since a 62% fill limit still provides a safety margin of 38% during transportation, RSPA believes that this fill limit is acceptable for transportation.

Since the proposed incorporation of ANSI N14.1-1987 affects a number of paragraphs in § 173.420 and Notice 87-7 substantially changes § 173.420(a), the entire § 173.420 is being published for reference. However, only those changes referring to ANSI N14.1-1987 and to the change in the permitted fill limit are the subject of this notice. Comments addressing only these two issues are requested.

Administrative Notices

The RSPA has determined that this rulemaking (1) is not "major" under Executive Order 12291; (2) is not "significant" under DOT's regulatory policies and procedures (44 FR 11034); (3) will not affect not-for-profit enterprises, or small governmental jusrisdictions; and (4) does not require an environmental impact statement under the National Environmental Policy Act (42 U.S.C. 4321 *et seq.*). A regulatory evaluation is available for review in the docket. Based on limited information concerning the size and nature of entities likely to be affected, I certify that this regulation will not have a significant economic impact on a substantial number of small entities under the criteria of the Regulatory Flexibility Act. I have reviewed this regulation in accordance with Executive Order 12612 ("Federalism"). Although this proposed regulation intends to incorporate ANSI N14.1–1987, it has no substantial direct effects on the states, on the Federal-state relationship or the distribution of power and responsibilities among levels of government. Thus, this proposed regulation contains no policies that have Federalism implications, as defined in Executive Order 12612.

List of Subjects

49 CFR Part 171

Hazardous materials transportation, Matter incorporated by reference.

49 CFR Part 173

Hazardous materials transportation, Packaging, Radioactive materials.

In consideration of the foregoing, 49 CFR Parts 171 and 173 are amended as follows:

PART 171—GENERAL INFORMATION, REGULATIONS, AND DEFINITIONS

1. The authority citation for Part 171 continues to read as follows:

Authority: 49 U.S.C. 1802, 1803, 1804, 1808; 49 CFR Part 1, unless otherwise noted.

2. In § 171.7, paragraph (d)(4)(iii) would be revised to read as follows:

§ 171.7 Matter incorporated by reference.

* * * * *

(d) * * *

(4) * * *

(iii) American National Standard N14.1 is entitled, "Uranium Hexafluoride Packaging for Transport," 1987 edition.

* * * * *

PART 173—SHIPPERS—GENERAL REQUIREMENTS FOR SHIPMENTS AND PACKAGINGS

3. The authority citation for Part 173 continues to read as follows:

Authority: 49 U.S.C. 1803, 1804, 1805, 1806, 1807, 1808; 49 CFR Part 1, unless otherwise noted.

4. § 173.420 would be revised to read as follows:

§ 173.420 Uranium hexafluoride (fissile and low specific activity).

(a) In addition to any other applicable requirements of this subchapter, uranium hexafluoride, fissile or low specific activity, must be packaged in conformance with the following requirements:

(1) Before initial filling and during periodic inspection and test, packaging shall be cleaned in accordance with American National Standard N14.1–1987;

(2) Packagings must be designed, fabricated, inspected, tested and marked in accordance with—

(i) American National Standard N14.1–1987;

(ii) An edition of American National Standard N14.1 issued prior to 1987 provided the standard was in effect at the time the packaging was manufactured;

(iii) Specifications for DOT Class 106A multi-unit tank car tanks (§§ 179.300, 179.301, and 179.302 of this subchapter); or

(iv) Section VIII, Division I of the ASME Code, provided the packaging—

(A) Was manufactured on or before June 30, 1987;

(B) Conforms to the edition of the ASME Code in effect at the time the packaging was manufactured;

(C) Is used within its original design limitations; and

(D) Has wall (shell and head) thicknesses that have not decreased below the minimum value specified in the following table:

Packaging model	Minimum thickness millimeters (inches)
1S, 2S	1.58 (0.062)
5A, 8A	3.17 (0.125)
12A, 12B	4.76 (0.187)
30B	7.93 (0.312)
48A, F, X, and Y	12.70 (0.500)
48T, O, OM, OM Allied, HX, H, and G	6.35 (0.250)

(3) Uranium hexafluoride must be in solid form when offered for transportation;

(4) The volume of the solid uranium hexafluoride, except solid depleted uranium hexafluoride, at 21.1 °C (70 °F) may not exceed 61% of the volumetric capacity of the packaging. The volume of solid depleted uranium hexafluoride, at 21.1 °C (70 °F) may not exceed 62% of the volumetric capacity of the packaging.

(5) The pressure in the package at 21.1 °C (70 °F) must be less than 101.3 kPa (14.8 psia).

(b) Packagings of uranium hexafluoride must be periodically inspected, tested and marked in accordance with American National Standard N14.1–1987.

(c) Each repair to a packaging for uranium hexafluoride shall be performed in conformance with American National Standard N14.1–1987.

Issued in Washington, DC on April 1, 1988, under authority delegated in 49 CFR Part 106, Appendix A.

Alan I. Roberts,

Director, Office of Hazardous Materials Transportation.

[FR Doc. 88–7548 Filed 4–5–88; 8:45 am]

BILLING CODE 4910–60–M

DEPARTMENT OF COMMERCE

National Oceanic and Atmospheric Administration

50 CFR Part 644

Atlantic Billfishes

AGENCY: National Marine Fisheries Service (NMFS), NOAA, Commerce.

ACTION: Notice of availability of a fishery management plan and request for comments.

SUMMARY: NOAA issues this notice that the South Atlantic Fishery Management Council, in cooperation with the New England, Mid-Atlantic, Gulf of Mexico, and Carribbean Fishery Management Councils, has submitted the Fishery Management Plan for Atlantic Billfishes (FMP) for review by the Secretary of Commerce. Comments from the public are invited.

DATE: Comments will be accepted until June 3, 1988.

ADDRESSES: Send comments to Rodney C. Dalton, Fishery Operation Branch, National Marine Fisheries Service, 9450 Koger Boulevard, St. Petersburg, FL 33702. Limited copies of the FMP are available at this address.

Copies of the FMP and supporting documents may also be obtained from the South Atlantic Fishery Management

Council, Southpark Building, Suite 306, 1 Southpark Circle, Charleston, SC 29407, telephone 803-571-4366.

FOR FURTHER INFORMATION CONTACT: Rodney C. Dalton (Plan Coordinator) at 813-893-3722.

SUPPLEMENTARY INFORMATION: The FMP was prepared by the Councils under the authority of the Magnuson Fishery Conservation and Management Act. The Magnuson Act requires that the Secretary of Commerce, upon receipt of the FMP, immediately publish notice of its availability for public review and comment. The Secretary will consider public comments in determining whether to approve the FMP.

The FMP proposes regulations for managing the foreign and domestic fisheries for Atlantic billfishes within the exclusive economic zone in the Atlantic Ocean (including the Gulf of Mexico and the Caribbean Sea). The FMP proposes: (1) Prohibition of the sale of blue marlin, white marlin, sailfish, and spearfish caught in specified portions of the Atlantic Ocean; (2) minimum size limits for blue marlin, white marlin, and sailfish; (3) prohibition of possession of billfishes by pelagic longline and drift net vessels; (4) mandatory reporting from billfish tournaments selected by NMFS; and (5) incorporation into the FMP of the foreign fishing management measures, pertinent to billfishes, currently contained in the Preliminary Fishery Management Plan for Atlantic Billfishes and Sharks.

On September 25, 1987, the Environmental Protection Agency published a notice of availability of a draft environmental impact statement for this FMP (52 FR 36096). Proposed regulations based on this FMP are scheduled to be published within 15 days.

(16 U.S.C. 1801 *et seq.*)

Dated: April 1, 1988.

Richard H. Schaefer,

Director, Office of Fishery Conservation and Management.

[FR Doc. 88-7572 Filed 4-5-88; 8:45 am]

BILLING CODE 3310-22-M

Notices

Federal Register
Vol. 53, No. 66
Wednesday, April 6, 1988

This section of the FEDERAL REGISTER contains documents other than rules or proposed rules that are applicable to the public. Notices of hearings and investigations, committee meetings, agency decisions and rulings, delegations of authority, filing of petitions and applications and agency statements of organization and functions are examples of documents appearing in this section.

DEPARTMENT OF AGRICULTURE

Office of the Secretary

Meat Import Act; Second Quarterly Estimate

Public Law 88–482, enacted August 22, 1964, as amended by Pub. L. 96–177 (hereinafter referred to as the "Act"), provides for limiting the quantity of fresh, chilled, or frozen meat of cattle, sheep except lamb, and goats (TSUS 106.10, 106.22, and 106.25), and certain prepared or preserved beef and veal products (TSUS 107.55, 107.61, and 107.62), which may be imported into the United States in any calendar year. Such limitations are to be imposed when the Secretary of Agriculture estimates that imports of articles provided for in TSUS 106.10, 106.22, 106.25, 107.55 and 107.62 (hereinafter referred to as "meat articles"), in the absence of limitations under the Act during such calendar year, would equal or exceed 110 percent of the estimated aggregate quantity of meat articles prescribed for calendar year 1988 by section 2(c) as adjusted under section 2(d) of the Act.

As published on January 6, 1988 (53 FR 267), the estimated aggregate quantity of meat articles prescribed by section 2(c), as adjusted by section 2(d) of the Act, for calendar year 1988 is 1,386.8 million pounds.

In accordance with the requirements of the Act, I have determined that the second quarterly estimate for 1988 of the aggregate quantity of meat articles which would, in the absence of limitations under the Act, be imported during calendar year 1988 is 1,480 million pounds.

Done at Washington, DC this 31st day of March, 1988.

Richard E. Lyng,

Secretary of Agriculture.

[FR Doc. 88–7503 Filed 4–5–88; 8:45 am]

BILLING CODE 3410–10–M

Commodity Credit Corporation

Uniform Grain and Rice Storage Agreement Fees

AGENCY: Commodity Credit Corporation, USDA.

ACTION: Notice of fees.

SUMMARY: The purpose of this notice is to publish a schedule of fees to be paid to Commodity Credit Corporation (CCC) by grain and rice warehousemen requesting: (a) To enter into a storage agreement; or (b) renewal of an existing storage agreement in accordance with the regulations governing the Standards for Approval of Warehouses for Grain, Rice, Dry Edible Beans, and Seed (7 CFR 1421.5551 *et seq.*). The fees are charged by CCC to defray the costs of periodic examination of warehouses operated by such warehousemen who do not have a Federal warehouse license or State warehouse license issued by a State having a cooperative agreement with CCC for warehouse examination services and to defray the costs of contract application processing and examination of warehouses operated by warehousemen who do not have an existing storage agreement.

EFFECTIVE DATE: April 1, 1988.

FOR FURTHER INFORMATION CONTACT: Steven Closson, Chief, Storage Contract Branch, Warehouse Division, ASCS, USDA, Room 5962-South Building, P.O. Box 2415, Washington, DC 20013, (202) 447–5647.

SUPPLEMENTARY INFORMATION: This notice has been reviewed in conformity with Executive Order 12291 and Departmental Regulation 1512–1 and has been classified as "not major" since implementation will not result in: (1) An annual effect on the economy of $100 million or more; (2) a major increase in costs or prices for consumers, individual industries, Federal, State, or local government agencies, or geographic regions; or (3) significant adverse effects on competition, employment, investments, productivity, innovation, the environment, or the ability of United States-based enterprises to compete with foreign-based enterprises in domestic or export markets.

It has been determined by an environmental evaluation that this action will have no significant impact on the quality of the human environment. Therefore, neither an Environmental Assessment nor an Environmental Impact Statement is required.

This program is not subject to the provisions of Executive Order 12372 which requires intergovernmental consultation with State and local officials. See the Notice related to 7 CFR Part 3015, Subpart V, published at 48 FR 29115 (June 24, 1983).

It has been determined that this rule will not increase the federal paperwork burden for individuals, small businesses, and other persons. CCC is also not required by 5 U.S.C. 553 or any other provision of law to publish a notice of proposed rulemaking with respect to the subject matter of this notice. Therefore, the Regulatory Flexibility Act is not applicable to this notice, and a Regulatory Flexibility Analysis was not prepared.

The CCC Charter Act (15 U.S.C. 714 *et seq.*) authorizes CCC to conduct various activities to stabilize, support, and protect farm income and prices. CCC is authorized to carry out such activities as making price support available with respect to various agricultural commodities, removing and disposing of surplus agricultural commodities, exporting or aiding in the exportation of agricultural commodities, and procuring agricultural commodities for sale both in the domestic market and abroad. Section 4(h) of the CCC Charter Act provides that CCC will not acquire real property in order to provide storage facilities for agricultural commodities unless CCC determines that private facilities for the storage of such commodities are inadequate. Further, section 5 of the CCC Charter Act requires that in carrying out purchasing and selling operations and in the warehousing, transporting, or handling of agricultural commodities, CCC use, to the maximum extent practicable, the usual and customary channels, facilities, and arrangements of trade and commerce.

Pursuant to these provisions, CCC enters into storage agreements with private grain and rice warehousemen to provide for the storage of commodities owned by CCC or pledged as security to CCC for price support loans. CCC examines all grain and rice warehouses which are the subject of a storage agreement, or for which a warehouseman has requested approval of a new storage agreement, to determine whether the warehouseman

satisfies the standards of approval or has the ability to do so, or is complying with the terms and conditions of the storage agreement. Application procedures include review of an applicant's financial statement, establishment of net worth, verification of licensing requirements, and other contract administrative procedures.

7 CFR 1421.5558 provides that all grain and rice warehousemen who do not have an existing agreement with CCC for storage and handling of CCC-owned commodities or commodities pledged to CCC as loan collateral, but who desire such an agreement, must pay an application and examination fee for each warehouse for which CCC approval is sought prior to CCC conducting the original warehouse examination.

Section 1421.5558 provides further that each warehouseman who has a nonfederally licensed grain or rice warehouse in States that do not have a cooperative agreement with CCC for warehouse examinations must pay an annual contract fee to CCC for each such warehouse which is approved by CCC or for which CCC approval is sought. A grain or rice warehouseman who has entered into a storage agreement with CCC must pay the annual contract fee in advance of the renewal date of the agreement. A grain or rice warehouseman who is seeking to enter into a storage agreement with CCC must also pay the annual contract fee for each warehouse for which CCC approval is sought prior to the time that the agreement is approved by CCC. Section 1421.5558 also provides that the amount of the contract fee will be determined and announced in the **Federal Register**. By proposed rule published October 8, 1987, (52 FR 37619) this section was proposed to be modified to provide that CCC may announce in the **Federal Register** a fee schedule that will remain effective until changed by CCC rather than announced annually. However, by notice published February 1, 1988, (53 FR 2759) the comment period for the proposed rule was reopened to February 12, 1988, and a final rule has not been issued. The contract fee is designed to reimburse CCC for approximately 50 percent of the cost of warehouse examinations and contract origination administrative costs.

A review of the revenue collected from application and examination fees and contract fees indicated that the fee schedules presently being used have generated sufficient revenues to cover approximately 50 percent of the cost incurred performing warehouse examinations and other contract origination administrative costs for the current year. Projections of program costs indicate that CCC's expenditures for the examination of grain and rice warehouses should remain relatively stable. Accordingly, the fees are unchanged from those fees which were applicable to the 1987–88 contract year.

Determination

The fees set forth herein will be collected by the Commodity Credit Corporation (CCC) from warehousemen who have entered into a Uniform Grain Storage Agreement (UGSA) or a Uniform Rice Storage Agreement (URSA) with CCC or who are seeking to enter into a UGSA or URSA with CCC.

Applicants for a Contract

The application and examination fees and contract fee will be collected by CCC from all warehousemen requesting a UGSA or URSA who do not have an existing agreement with CCC.

Application and Examination Fees

The fee will be computed at the rate of $10 for each 10,000 bushels of storage capacity or fraction thereof, but the fee will be not less than $100 nor more than $1,000; however, if the applicant is licensed under the United States Warehouse Act or is applying for such a license, the fee will be computed at the rate of $2.50 per 10,000 bushels of storage capaacity or fraction thereof but not less than $25 nor more than $250.

Before any original application is processed or examination is made, the applicant must deposit with CCC the amount of the fee prescribed. Such deposit must be made in the form of a check, draft or post office or express money order payable to the order of "Commodity Credit Corporation."

New and Existing Contracts

The contract fee will be collected by CCC from warehouse men who have entered into a URSA or a UGSA with CCC or who will enter into a URSA or UGSA with CCC but who do not have a Federal warehouse license or a State warehouse license issued by a State having a cooperative agreement with CCC for warehouse examination services.

TWELVE-MONTH CONTRACT FEE SCHEDULE

Location capacity (bushels)	Contract fees (dollars)
1 to 150,000	100
150,001 to 250,000	200

TWELVE-MONTH CONTRACT FEE SCHEDULE—Continued

Location capacity (bushels)	Contract fees (dollars)
250,001 to 500,000	300
500,001 to 750,000	400
750,001 to 1,000,000	500
1,000,001 to 1,200,000	600
1,200,001 to 1,500,000	700
1,500,001 to 2,000,000	800
2,000,001 to 2,500,000	900
2,500,001 to 5,000,000	1,000
5,000,001 to 7,500,000	1,100
7,500,001 to 10,000,000	1,200
10,000,001 plus	[1] 1,200

[1] Plus $30 per million bushels of capacity above 10 million or fraction thereof.

The location capacity of the warehouse will be determined by the Secretary of Agriculture and will be the capacity of a fully functional facility operated as a public warehouse or functional unit of a group of warehouses usually within the same town or freight tariff point. A functional facility is one which could operate independently if it was separate from other facilities that may be included in a merged warehouse code. Any outlying unit which is not a fully functional facility would have its capacity included as part of the combined capacity of the nearest fully functional operating location.

The contract fee will be the sum total of the fees for all functional units within the warehouse code and will be assessed and must be paid in advance of the annual contract renewal date or, in the case of a warehouseman who is seeking aproval of a new URSA or UGSA, prior to the time that the agreement is approved by CCC. The failure of a warehouseman to pay such fee at that time will be grounds for termination of an existing URSA or UGSA or for rejection of approval of a new URSA and UGAS.

Signed at Washington, DC on March 31, 1988.

Milton Hertz,

Executive Vice President, Commodity Credit Corporation.

[FR Doc. 88-7504 Filed 4-5-88; 8:45 am]

BILLING CODE 3410-05-M

Foreign Agricultural Service

Topics Discussed in FY 1987 by Agricultural Advisory Committees for Trade

AGENCY: Foreign Agricultural Service, USDA.

ACTION: Notice.

SUMMARY: This notice is provided in order to notify the public of activities of the Agricultural Policy Advisory Committee and the nine Agricultural Technical Advisory Committees for Trade as required by section 10(d) of the Federal Advisory Committee Act. The advice received from the committees during fiscal year 1987 concerned an array of agricultural trade issues, the most significant being the following:

Uruguay Round—Regarding the Uruguay Round agriculture negotiations, Committee discussions concentrated on developments related to the preparation and tabling of the U.S. negotiating proposal, and on building domestic and international support for the bold and comprehensive market-oriented reforms in the U.S. approach. Committee discussions also centered on examining and comparing the proposals tabled by other countries participating in the negotiations.

Harmonized Tariff System—The private sector advisory committees examined the draft proposal to convert the existing Tariff Schedule to a Harmonized Tariff Schedule, which is based on an international classification system. They also considered the converted tariff schedules of our major trading partners to determine whether U.S. agricultural exporters would be adversely affected by their adoption of this international system. They received reports from U.S. negotiators on progress in aligning GATT concessions in Geneva GATT talks.

Section 1132 Reports—The Committees reviewed "Trade Policies and Market Opportunities U.S. Farm Exports", an annual report required under section 1132 of the Food Security Act of 1985. This report describes the agricultural production and trade policies of more than 100 countries. It identifies government programs that aid agricultural exports or impede agricultural imports from the United States, and identifies market opportunities for U.S. agricultural exports. The Committees developed specific recommendations for action to be taken by the Federal Government and private industries to reduce the trade barriers and to expand export opportunities identified in the report.

Canada Free Trade Agreement—The Committees discussed the agricultural issues under consideration in the U.S. negotiations with Canada to create a free trade area between the two countries.

Other Bilateral Trade Issues—Regarding Japan, the most important issues discussed were those concerning that country's agricultural import quotas Specifically, the strategy to eliminate restrictions on beef and citrus trade upon the expiration of a four year understanding on April 1, 1988, and the successful GATT challenge to quotas on 12 other product categories were detailed.

Regarding the European Community, the Committees discussed issues relating to the agreement between the United States and the EC to settle the trade dispute arising from the enlargement of the EC to include Spain and Portugal. Other issues included developments in the citrus-pasta dispute, the EC ban on the use of growth promoting hormones in livestock, the EC Third Country Meat Directive relating to slaughter plant certification, and the proposed EC tax on vegetable oils.

Details of these discussions are not available since meetings and advice given are open only to members of the committees in accordance with section 135(f)(2) of the Trade Act of 1974, as amended by the Trade Agreements Act of 1979.

Issued at Washington, DC this 31 day of March 1988.

Thomas O. Kay,

Administrator, Foreign Agricultural Service.

[FR Doc. 88-7505 Filed 4-5-88; 8:45 am]

BILLING CODE 3410-01-M

DEPARTMENT OF COMMERCE

International Trade Administration

[Application 88-00001]

Export Trade Certificate of Review

AGENCY: International Trade Administration, Commerce.

ACTION: Notice of Issuance of an Export Trade Certificate of Review.

SUMMARY: The Department of Commerce has issued an export trade certificate of review to Michael R. Mace d/b/a Mutual Trade Services (MTS). This notice summarizes the conduct for which certification has been granted.

FOR FURTHER INFORMATION CONTACT: John E. Stiner, Director, Office of Export Trading Company Affairs, International Trade Administration, 202-377-5131. This is not a toll-free number.

SUPPLEMENTARY INFORMATION: Title III of the Export Trading Company Act of 1982 ("the Act") (Pub. L. No 97-290) authorizes the Secretary of Commerce to issue export trade certificates of review. The regulations implementing Title III are found at 15 CFR Part 325 (50 FR 1804, January 11, 1985).

The Office of Export Trading Company Affairs is issuing this notice pursuant to 15 CFR 325.6(b), which requires the Department of Commerce to publish a summary of a certificate in the **Federal Register.** Under section 305(a) of the Act and 15 CFR 325.11(a), any person aggrieved by the Secretary's determination may, within 30 days of the date of this notice, bring an action in any appropriate district court of the United States to set aside the determination on the ground that the determination is erroneous.

Description of Certified Conduct

Export Trade

All products and services

Related Services

Consulting, international market research, advertising, marketing, insurance, product research and design, transportation, trade documentation and freight forwarding, communication and processing of foreign orders to and for exporters and foreign purchasers, warehousing, foreign exchange, financing, and taking title to goods.

Export Markets

All parts of the world except the United States (the fifty states of the United States, the District of Columbia, the Commonwealth of Puerto Rico, the Virgin Islands, American Samoa, Guam, the Commonwealth of the Northern Mariana Islands, and the Trust Territory of the Pacific Islands)

Export Trade Activities and Methods of Operation

MTS may:

1. Enter into nonexclusive and/or exclusive agreements with individual suppliers to act as an Export Intermediary.

2. Enter into nonexclusive and/or exclusive agreements with Export Intermediaries for the sale of products and services in the Export Markets.

3. Contact individual suppliers to elicit information relating to sales of products and services in the Export Markets, including price, volume, and estimated delivery schedules.

4. Enter into nonexclusive or exclusive agreements with individual purchasers in the Export Markets to act as a Purchasing Agent with respect to particular transactions.

A copy of each certificate will be kept in the International Trade Administration's Freedom of Information Records Inspection Facility, Room 4102, U.S. Department of Commerce, 14th Street and Constitution Avenue NW., Washington, DC 20230.

Date: March 31, 1988.

John E. Stiner,

Director, Office of Export Trading Company Affairs.

[FR Doc. 88-7553 Filed 4-5-88; 8:45 am]

BILLING CODE 3510-DR-M

University of California, Los Angeles et al.; Consolidated Decision on Applications for Duty-Free Entry of Scientific Instruments

This is a decision consolidated pursuant to section 6(c) of the Educational, Scientific, and Cultural Materials Importation Act of 1966 (Pub. L. 89-651), 80 Stat. 897; 15 CFR Part 301). Related records can be viewed between 8:30 a.m. and 5:00 p.m. in Room 1523, U.S. Department of Commerce, 14th and Constitution Avenue, NW., Washington, DC.

Docket Number: 87-294. Applicant: University of California, Los Angeles, CA 90024. *Instrument:* Preparative Quench and Stopped-Flow Sample Handling Unit, Model PQ/SF-53. *Manufacturer:* Hi-Tech Scientific Ltd., United Kingdom. *Reasons for this Decision:* The foreign instrument provides stopped flow and rapid chemical quench for kinetic mixing measurements. *Advice Submitted By:* National Institutes of Health, February 9, 1988.

Docket Number: 87-163R. *Applicant:* University of Nebraska, Lincoln, NE 68588. *Instrument:* Circular Dichroism Spectropolarimeter, Model J-600C. *Manufacturer:* JASCO, Japan. *Reasons for this Decision:* The foreign instrument provides a time constant of 0.5 milliseconds. *Advice Submitted By:* National Institutes of Health, January 12, 1988.

Docket Number: 87-099R. *Applicant:* USDA/ARS Beltsville Agricultural Research Center, Beltsville, MD 20705. *Instrument:* GC/Mass Spectrometer, Model MS 25RFA with Data System. *Manufacturer:* Kratos Analytical, United Kingdom. *Reasons for this Decision:* The foreign instrument provides mass range to 4000 amu and resolution to 15000. *Advice Submitted By:* National Institutes of Health, January 12, 1988.

Docket Number: 87-077R. *Applicant:* Texas A & M University, College Station, TX 77843. *Instrument:* Stopped Flow/Preparative Quench Spectrophotometer, Model PQ-53 with Accessories. *Manufacturer:* Hi-Tech Scientific Ltd., United Kingdom. *Reasons for this Decision:* The foreign instrument provides stopped flow and rapid chemical quench for kinetic mixing measurements. *Advice Submitted By:* National Institutes of Health, January 12, 1988.

Comments: None received.

Decision: Approved. No instrument of equivalent scientific value to the foreign instrument, for such purposes as each is intended to be used, is being manufactured in the United States. The National Institutes of Health advise that (1) the capabilities of each of the foreign instruments described above are pertinent to each applicant's intended purpose and (2) they know of no domestic instrument or apparatus of equivalent scientific value for the intended use of each instrument.

We know of no other instrument or apparatus being manufactured in the United States which is of equivalent scientific value to any of the foreign instruments.

Frank W. Creel,

Director, Statutory Import Programs Staff.

[FR Doc. 88-7554 Filed 4-5-88; 8:45 am]

BILLING CODE 3510-DS-M

University of Pittsburgh; Decision on Application for Duty-Free Entry of Scientific Instrument

This decision is made pursuant to section 6(c) of the Educational, Scientific, and Cultural Materials Importation Act of 1966 (Pub. L. 89-651, 80 Stat. 897; 15 CFR Part 301). Related records can be viewed between 8:30 a.m. and 5:00 p.m. in Room 1523, U.S. Department of Commerce, 14th and Constitution Avenue NW., Washington, DC.

Docket Number: 88-026. *Applicant:* University of Pittsburgh, Pittsburgh, PA 15261. *Instrument:* High Pressure PVT Cell, Model JEFRI 155-10-PVT. *Manufacturer:* D.B. Robinson and Associates, Canada. *Intended Use:* See notice at 52 FR 46813, December 10, 1987.

Comments: None received.

Decision: Approved. No instrument of equivalent scientific value to the foreign instrument, for such purposes as it is intended to be used, is being manufactured in the United States.

Reasons: The foreign instrument provides a maximum operating pressure of 10,000 psi (70 MPa), temperature to 400°F (200°C) and an interior cell volume free of pressure distortion permitting accurate density measurements without having to calibrate cell volume at different pressures. the National Bureau of Standards has advised that (1) this capability is pertinent to the applicant's intended purpose and (2) it knows of no domestic instrument or apparatus of equivalent scientific value to the foreign instrument for the applicant's intended use.

We know of no other instrument or apparatus of equivalent scientific value to the foreign instrument which is being manufactured in the United States.

Frank W. Creel,

Director, Statutory Import Programs Staff.

[FR Doc. 88-7555 Filed 4-5-88; 8:45 am]

BILLING CODE 3510-DS-M

National Oceanic and Atmospheric Administration

Gulf of Mexico Fishery Management Council; Public Meetings

AGENCY: National Marine Fisheries Service, NOAA, Commerce.

The Gulf of Mexico Council and its Committees will convene separate public meetings at the Crowne Plaza Holiday Inn, 333 Poydras, New Orleans, LA, as follows:

Council—On April 28, 1988, will convene at 8:30 a.m., to discuss the stock assessment and economic analysis for reef fish; discuss committee actions; review the Environmental Protection Agency (EPA) Gulf initiative; discuss the Administrative Policy Committee's report, and review the ecosystems workshop and enforcement reports; adjournment is at 3:15 p.m.

Committees—On April 26, 1988, at 1 p.m., the Administrative Policy Committee will convene, followed by a meeting of the Reef Fish Management Committee; adjournment is at 5:30 p.m.

For further information contact Wayne E. Swingle, Gulf of Mexico Fishery Management Council, 5401 West Kennedy Boulevard, Suite 881, Tampa, FL; telephone: (813) 228-2815.

Date: April 1, 1988.

Richard H. Schaefer,

Director, Office of Fisheries Conservation and Management, National Marine Fisheries Service.

[FR Doc. 88-7573 Filed 4-5-88; 8:45 am]

BILLING CODE 3510-22-M

Gulf of Mexico and South Atlantic Fishery Management Councils; Public Meetings

AGENCY: National Marine Fisheries Service, NOAA, Commerce.

The Gulf of Mexico and South Atlantic Fishery Management Councils and their Intercouncil Mackerel, Spiny Lobster, and Habitat Management Committees will convene separate public meetings at the Crowne Plaza Holiday Inn, 333 Poydras, New Orleans, LA, as follows:

Joint Council—On April 27, 1988, will convene at 8:30 a.m., to review actions of the committee on setting total allowable catch (TAC) and allocations; discuss principal elements for Amendment 3 for the Coastal Migratory Pelagic (Mackerel) Fishery Management Plan (FMP); review the threshold concept; discuss elements for inclusion in framework measures for the spiny lobster fishery, and review habitat issues; adjournment is at 5 p.m.

Joint Committee—On April 25, 1988, will convene at 9 a.m., with the Mackerel Management Committee to review the mackerel stock assessment; discuss the stock assessment group report and stock identification workshop; review Advisory Panel and Scientific and Statistical Committee recommendations; recommend TAC and allocations, and discuss principal elements for Amendment 3; adjournment is at 5 p.m. On April 26 at 8 a.m., the Spiny Lobster Management Committee will convene, followed by the Habitat Protection Committee; adjournment is at noon.

For further information contact Wayne E. Swingle, Executive Director, Gulf of Mexico Fishery Management Council, 5401 West Kennedy Boulevard, Suite 881, Tampa, FL 33609; telephone: (813) 228-2815.

Date: April 1, 1988.

Richard H. Schaefer,

Director, Office of Fisheries Conservation and Management, National Marine Fisheries Service.

[FR Doc. 88-7574 Filed 4-5-88; 8:45 am]

BILLING CODE 3510-22-M

Pacific Fishery Management Council; Public Meeting

AGENCY: National Marine Fisheries Service, NOAA, Commerce.

The Pacific Fishery Management Council's Limited Entry Committee is scheduled to meet in conjunction with the Council's Technical Advisory Subgroup, April 19, 1988, at 9 a.m., at the Viscount Hotel, 1441 N.E. 2nd, Portland, OR, to assess the results of the Council's review of the preliminary license limited entry framework, and revise it as necessary for presentation in July 1988 to the Council. The public meeting will adjourn April 20 at 4:30 p.m.

For further information contact Mr. Lawrence D. Six, Executive Director, Pacific Fishery Management Council, Metro Center, Suite 420, 2000 S.W. First Avenue, Portland, OR 97201; Telephone: (503) 221-6352.

Date: April 1, 1988.

Richard H. Schaefer,

Director, Office of Fisheries Conservation and Management, National Marine Fisheries Service.

[FR Doc. 88-7575 Filed 4-5-88; 8:45 am]

BILLING CODE 3510-22-M

COMMITTEE FOR THE IMPLEMENTATION OF TEXTILE AGREEMENTS

Adjustment of Import Limits for Certain Cotton, Wool and Man-Made Fiber Textile Products Produced or Manufactured in the People's Republic of Indonesia

March 31, 1988.

The Chairman of the Committee for the Implementation of Textile Agreements (CITA), under the authority contained in E.O. 11651 of March 3, 1972, as amended, has issued the directive published below to the Commissioner of Customs to be effective on April 7, 1988. For further information contact Jennifer Tallarico. International Trade Specialist, Office of Textiles and Apparel, U.S. Department of Commerce, (202) 377-4212. For information on the quota status of these limits, please refer to the Quota Status Reports which are posted on the bulletin boards of each Customs port or call (202) 535-9480. For information on embargoes and quota re-openings, please call (202) 377-3715.

Background

A CITA directive dated June 25, 1987 (52 FR 24504) established limits for cotton, wool and man-made fiber textile products, produced or manufactured in Indonesia and exported during the twelve-month period which began on July 1, 1987 and extends through June 30, 1988. Subsequent CITA directive dated December 28, 1987 were published in the **Federal Register** (52 FR 49465 and 52 FR 49468) which established new import restraint limits and amended the previously established limits for two restraint periods which began on July 1, 1987 and extended through December 31, 1987 and which began on January 1, 1988 and extends through June 30, 1988.

Under the terms of the Bilateral Cotton, Wool, Man-Made Fiber, Silk Blend and Other Vegetable Fiber Textile Agreement, effected by exchange of notes dated September 25 and October 3, 1985, as amended, between the Governments of the United States and the Republic of Indonesia, the limits for cotton, wool and man-made fiber textile products in Group I, and within the group Categories 315, 336, 337, 340, 445/446, 604-A, 635, 640 and 648; Categories 345, 369-D, 636, 637 and 651 in Group II; and the wool subgroup in Group II are being increased for carryover for the six-month period January 1, 1988 through June 30, 1988. The limits for the period July 1, 1987 through December 31, 1987 are being adjusted in a separate directive.

A description of the textile categories in terms of T.S.U.S.A. numbers is available in the CORRELATION: Textile and Apparel Categories with Tariff Schedules of the United States Annotated (see **Federal Register** notice 52 FR 47745 dated December 11, 1987).

The letters to the Commissioner of Customs and the actions taken pursuant to them are not designed to implement all of the provisions of the bilateral agreement, but are designed to assist only in the implementation of certain of its provisions.

James H. Babb,

Chairman, Committee for the Implementation of Textile Agreements.

March 31, 1988.

COMMITTEE FOR THE IMPLEMENTATION OF TEXTILE AGREEMENTS

Commissioner of Customs, *Department of the Treasury, Washington, DC 20229*

Dear Mr. Commissioner:

This directive amends, but does not cancel, the directive issued to you on December 28, 1987 by the Chairman, Committee for the Implementation of Textile Agreements, concerning imports into the United States of certain cotton, wool, man-made fiber, silk blend and other vegetable fiber textiles and textile prouducts, poroduced or manufactured in the Republic of Indonesia and exported during the six-month period which began on January 1, 1988 and extends through June 30, 1988.

Effective on April 7, 1988, the directive of December 28, 1987 is amended to adjust the previously established limits for cotton, wool and man-made fiber textile products in the following categories, as provided under the terms of the bilateral agreement, effected by exchange of notes dated September 25 and October 3, 1985, as amended:

Category	Adjusted 6-month limit [1]
Group I:	
219, 313-315, 317/617/326, 331, 334-337, 338/339, 340, 341, 347/348, 351, 369-S [2], 445/446, 604-A [3], 613/614/615, 625/626, 631-W [4], 635, 638/639, 640, 641, 645/646, 647 and 648, as a group.	150,960,758 square yards equivalent.
Sublevels within group I:	
315	9,354,055 square yard.
336	61,052 dozen.
337	50,394 dozen.
340	243,148 dozen.
445/446	42,341 dozen.
604-A	741,133 pounds.
635	64,013 dozen.
640	280,441 dozen.
648	822,720 dozen.
Sublevels within Group II:	
345	123,074 dozen.
369-D [5]	657,729 pounds.
636	152,207 dozen.
637	112,208 dozen.
651	74,798 dozen.
Subgroup within Group II:	
400-444 and 447-469, as a group.	3,024,318 square yards equivalent.

[1] The limits limits have not been adjusted to account for any imports exported after December 31, 1987.
[2] In Category 369-S, only TSUSA number 366.2840.
[3] In Category 604-A, only TSUSA numbers 310.5049 and 310.6045.
[4] In Category 631-W, only TSUSA numbers 704.3215, 704.8525, 704.8550 and 704.9000.
[5] In Category 369-D, only TSUSA numbers 365.6615, 366.1720, 366.1740, 366.2020, 366.2040, 366.2420, 366.2440 and 366.2860.

The Committee for the Implementation of Textile Agreements has determined that these actions fall within the foreign affairs exception to the rulemaking provisions of 5 U.S.C. 553(a)(1).

Sincerely,

James H. Babb,

Chairman, Committee for the Implementation of Textile Agreements.

March 31, 1988.

COMMITTEE FOR THE IMPLEMENTATION OF TEXTILE AGREEMENTS

Commissioner of Customs; Department of the Treasury Washington, DC 20229

Dear Mr. Commissioner:

To facilitate implementation of the Bilateral Cotton, Wool, Man-Made Fiber, Silk Blend and Other Vegetable Fiber Textile Agreement, effected by exchange of notes dated September 25 and October 3, 1985, as amended, between the Governments of the United States and Indonesia, I request that, effective on April 7, 1988, you adjust the limits established in the directive of June 25, 1987, as amended on December 28, 1987, for cotton, wool and man-made fiber textile products in the following categories, produced or manufactured in Indonesia and exported during the period which began on July 1, 1987 and extend through December 31, 1987:

Category	Adjusted 6-Month Limit [1]
313-315, 317, 317-S [2], 319, 320-P [3], 331, 334-337, 338/339, 340, 341, 347/348, 351, 369-S [4], 445/446, 604-A [5], 613, 614, 631-W [6], 635, 638/639, 640, 641, 645/646, 647 and 648 as a group.	112, 673, 315 square yards equivalent.
Sublevels within group I:	
315	8,056,452 square yards.
336	15,634 dozen.
337	33,876 dozen.
340	185,056 dozen.
445/446	8,664 dozen.
604-A	45,387 pounds.
614	4,843,234 square yards.
635	20,257 dozen.
640	76,564 dozen.
648	482,536 dozen.
Sublevels within group II:	
345	94,226 dozen.
369-D [5]	243,271 pounds.
636	97,105 dozen.
637	25,592 dozen.
651	47,484 dsozen.
Subgroup within group II:	
400-444 and 447-469, as a group.	35,982 square yards equivalent.

[1] The limits have not been adjusted to account for any imports exported after June 30, 1987.
[2] In Category 317-S, only TSUSA items 320.— through 331.—with statistical suffixes 50, 87 and 93.
[3] In Category 320-P, only TSUSA items 320.—, 321.—, 322.—, 326.—, 327.— and 328.—, with statistical suffixes 21, 22, 24, 31, 38, 49, 57, 74, 80 and 98.
[4] In Category 369-S, only TSUSA number 366.2840.
[5] In Category 604-A, only TSUSA numbers 310.5049 and 310.6045.
[6] In Category 631-W, only TSUSA numbers 704.3215, 704.8525, 704.8550 and 704.9000.

Goods exported during the period July 1, 1987 through December 31, 1987 in excess of the foregoing adjusted limits are to be charged to the limits established for these categories for the period January 1, 1988 through June 30, 1988.

This letter will be published in the **Federal Register.**

Sincerely,

James H. Babb,

Chairman, Committee for the Implementation of Textile Agreements.

[FR Doc. 88-7465 Filed 4-5-88; 8:45 am]

BILLING CODE 3510-DR-M

COMMODITY FUTURES TRADING COMMISSION

Advisory Committee on CFTC-State Cooperation; Sixth Renewal

The Commodity Futures Trading Commission has determined to renew again for a period of two years its advisory committee designated as the Commission's "Advisory Committee on CFTC-State Cooperation." As required by section 14(a)(2)(A) of the Federal Advisory Committee Act, 5 U.S.C. App. I, section 14(a)(2)(A), and 41 CFR 101-6.1007 and 101.6.1029, the Commission has consulted with the Committee Management Secretariat of the General Services Administration, and the Commission certifies that the renewal of the advisory committee is in the public interest in connection with duties imposed on the Commission by the Commodity Exchange Act, 7 U.S.C. 1, *et seq.*, as amended.

The objectives and scope of activities of the Advisory Committee on CFTC-State Cooperation are to conduct public meetings and submit reports and recommendations on matters of joint concern to the states and the Commission arising under the Commodity Exchange Act regarding regulation of commodity transactions and related activities.

Commissioner Fowler C. West serves as Chairman and Designated Federal Official of the Advisory Committee on CFTC-State Cooperation. State officials who have had experience in the commodities and consumer protection fields, a representative of the industry's only registered futures association, and a representative from an industry trade association serve as members.

Interested persons may obtain information or make comments by writing to the Commodity Futures Trading Commission, 2033 K Street NW., Washington, DC. 20581.

Issued in Washington, DC this 31st day of March 1988 by the Commission.

Jean A. Webb,

Secretary of the Commission.

[FR Doc. 88-7473 Filed 4-5-88; 8:45 am]

BILLING CODE 6351-01-M

DEPARTMENT OF DEFENSE

Department of the Navy

Academic Advisory Board to the Superintendent; United States Naval Academy; Open Meeting

Pursuant to the provisions of the Federal Advisory Committee Act (5 U.S.C. App. 2), notice is hereby given that the Academic Advisory Board to the Superintendent, United States Naval Academy, will meet on April 25 1988, in Rickover Hall, Room 301, United States Naval Academy, Annapolis, Maryland. The meeting will commence at 8:00 a.m. and terminate at 5:00 p.m.

The purpose of the meeting is to advise and assist the Superintendent of the Naval Academy concerning the education of midshipmen. To accomplish this objective, the Board will review academic policies and practices of the Naval Academy and will submit their proposals to the Superintendent to aid him in improving education standards and insolving Academy problems. The meeing will be open to the public for observation to the extent that space is available.

For further information concerning this meeting, contact: Major R. C. Funk, USMC, Military Secretary to the Academic Advisory Board, Office of the Academic Dean, United States Naval Academy, Annapolis, MD 21402-5000, Telephone No. (301) 267-2500.

Date: March 30, 1988.

W. R. Babington,

CDR, JAGC, USN, Federal Register Liaison Officer.

[FR Doc. 88-7484 Filed 4-5-88; 8:45 am]

BILLING CODE 3810-AE-M

Board of Advisors to the Superintendent, Naval Postgraduate School; Meeting

Pursuant to the provisions of the Federal Advisory Committee Act (5 U.S.C. app.), notice is hereby given that the Board of Adivsors to the Superintendent, Naval Postgraduate School, Monterey, California, will neet on May 5-6 1988, in Herrmann Hall at the School. On both days the first session will commence at 8:15 a.m. and terminate at 12:00 noon and the second session will commence at 1:15 p.m. and terminate at 5:00 p.m. All sessions are open to the public.

The purpose of the meeting is to elicit the advice of the board on the Navy's Postgraduate Education Program. The board will examine the effectiveness with which the Naval Postgraduate School is accomplishing its mission. To this end, the board will inquire into the graduate education policy; curricula; instruction; research; physical resources; administration; staff, faculty and student morale; fiscal affairs; and any other matters relating to the operation of the Naval Postgraduate School as the board considers pertinent.

For further information concerning this meeting contact: Commander G.K. Iversen, USN (Code 007), Naval Postgraduate School, Monterey, California 93943-5000, Telephone: (408) 646-2513.

Dated: March 31, 1988.

W.R. Babington, Jr.,

Commander, JAGC, U.S. Navy, Federal Register Certifying Officer.

[FR Doc. 88-1486 Filed 4-5-88; 8:45 am]

BILLING CODE 3810-AE-M

Naval Research Advisory Committee: Closed Meeting

Pursuant to the provisions of the Federal Advisory Committee Act (5 U.S.C. App.), notice is hereby given that the Naval Research Advisory Committee Panel on Next Generation Computer Resources will meet on April 28-29, 1988. The meeting will be held at the Pentagon, Washington, DC. The meeting will commence at 9:00 a.m. and terminate at 4:30 p.m. on April 28; and commence at 8:00 a.m. and terminate at 4:00 p.m. on April 29, 1988. All sessions of the meeting will be closed to the public.

The purpose of the meeting is to provide briefings for the panel members on computer resources. The agenda will include technical briefings, and discussions addressing congressional guidance, Navy strategy and program studies for current and projected computer resource needs. The these briefings, and discussions will contain classified information that is specifically authorized under criteria established by Executive Order to be keep secret in the interest of national defense and is in fact properly classified pursuant to such Executive Order. The classified and nonclassified matters to be discussed are so inextricably intertwined as to preclude opening any portion of the meeting. Accordingly, the Secretary of the Navy has determined in writing that the public interest requires that all sessions of the meeting be closed to the public because they will be concerned with matters listed in section 552b(c)(1) of Title 5, United States Code.

For further information concerning this meeting contact: Commander L.W. Snyder, U.S. Navy, Office of Naval Research, 800 North Quincy Street, Arlington, VA 22217-5000, Telephone Number: (202) 696-4870.

Dated: March 30, 1988.

W.R. Babington, Jr.,

Commander, JAGC, U.S. Navy, Federal Register Liaison Officer.

[FR Doc. 88-7485 Filed 4-5-88; 8:45 am]

BILLING CODE 3810-AE-M

DEPARTMENT OF EDUCATION

Proposed Agency Information Collection Requests Under OMB Review

AGENCY: Department of Education.

ACTION: Notice of proposed information collection requests.

SUMMARY: The Director, Information Technology Services, invites comments on the proposed information collection requests as required by the Paperwork Reduction Act of 1980.

DATES: Interested persons are invited to submit comments on or before May 6, 1988.

ADDRESSES: Written comments should be addressed to the Office of Information and Regulatory Affairs, Attention: Jim Houser, Desk Officer, Department of Education, Office of Management and Budget, 726 Jackson Place NW., Room 3208, New Executive Office Building, Washington, DC 20503. Requests for copies of the proposed information collection requests should be addressed to Margaret B. Webster, Department of Education, 400 Maryland Avenue SW., Room 5624, Regional Office Building 3, Washington, DC 20202.

FOR FURTHER INFORMATION CONTACT: Margaret B. Webster, (202) 732-3915.

SUPPLEMENTARY INFORMATION: Section 3517 of the Paperwork Reduction Act of 1980 (44 U.S.C. Chapter 35) requires that the Office of Management and Budget (OMB) provide interested Federal agencies and the public an early opportunity to comment on information collection requests. OMB may amend or waive the requirement for public consultation to the extent that public participation in the approval process would defeat the purpose of the information collection, violate State or Federal law, or substantially interfere with any agency's ability to perform its statutory obligations.

The Director, Information Technology Services, publishes this notice containing proposed information collection requests prior to submission of these requests to OMB. Each proposed information collection,

grouped by office, contains the following: (1) Type of review requested, e.g., new, revision, extension, existing or reinstatement; (2) title; (3) frequency of collection; (4) the affected public; (5) reporting burden; and/or (6) recordkeeping burden; and (7) abstract. OMB invites public comment at the address specified above. Copies of the requests are available from Margaret Webster at the address specified above.

Dated: April 1, 1988.

Carlos U. Rice,

Director for Information Technology Services.

Office of Management

Type of Review: Extension.
Title: Application for the Excellence in Education, Mathematics and Science, and Critical Foreign Languages Programs.
Frequency: One time only.
Affected Public: State or local governments; non-profit institutions.
Reporting Burden:
Responses: 1,000
Burden Hours: 6,000
Recordkeeping:
Recordkeepers: 0
Burden Hours: 0
Abstract: This form will be used by State educational agencies, local educational agencies, institutions of higher education and non-profit organizations to apply for grants under the Excellence in Education, Mathematics and Science, and Critical Foreign Languages Programs. The Department uses the information to make grant awards.

Office of Planning, Budget and Evaluation

Type of Review: New.
Title: Case Studies of Effective Migrant Education Projects.
Frequency: One time only.
Affected Public: Individuals or households; State or local governments
Reporting Burden:
Responses: 663
Burden Hours: 179
Recordkeeping:
Recordkeepers: 0
Burden Hours: 0
Abstract: This study will collect and identify information on effective migrant education practices from State and local educators and individuals. The Department will use the information to assess migrant education projects and to prepare a handbook on effective practices for State and local migrant educators.

Office of Special Education and Rehabilitation Services

Type of Review: Revision.
Title: State Plan for Vocational Rehabilitation Services.
Frequency: Triennally.
Affected Public: State or local governments.
Reporting Burden:
Responses: 86
Burden Hours: 1,032
Recordkeeping:
Recordkeepers: 86
Burden Hours: 1,450,000
Abstract: State Vocational Rehabilitation (VR) agencies must submit State plans to apply for grants under Title I of the Rehabilitative Act of 1973, as amended. The Department uses the information to monitor State VR agency compliance under Title I of the Act and its implementing regulations.

[FR Doc. 88-7542 Filed 4-5-88; 8:45 am]

BILLING CODE 4000-01-M

[CFDA No. 84.133A]

Notice Inviting Applications for a Research and Demonstration Project Under the National Institute on Disability and Rehabilitation Research for Fiscal Year 1988

Purpose: Provides support to public and private agencies and organizations, including institutions of higher education, Indian tribes, and tribal organizations, for research and training for hearing loss assessments for native Hawaiian children.
Deadline for Transmittal of Applications: June 10, 1988.
Applications available: April 15, 1988.
Available funds: $500,000.
Estimated average size of awards: $250,000 per year for two years.
Estimated number of awards: 1
Project period: 24 months.
Applicable regulations: (a) Education Department General Administrative Regulations, 34 CFR Parts 74, 75, 77, and 78; and (b) National Institute on Disability and Rehabilitation Research Regulations, 34 CFR Parts 350 and 351.
Authority for this competition: The Department of Education Appropriations Act, 1988 provides that $500,000 shall be available on a competitive basis for research and training for hearing loss assessments for native Hawaiian children under section 204 of the Rehabilitation Act until September 30, 1989.
For applications or information contact: National Institute on Disability and Rehabilitation Research, U.S. Department of Education, 400 Maryland Avenue SW., Switzer Building, Room 3070, Washington, DC 20202. Telephone: (202) 732-1207; deaf and hearing impaired individuals may call (202) 732-1198 for TTY services.
Program authority: 29 U.S.C. 762(a).

Dated: April 1, 1988.

Madeleine Will,

Assistant Secretary for Special Education and Rehabilitative Services.

[FR Doc. 88-7568 Filed 4-5-88; 8:45 am]

BILLING CODE 4000-01-M

Office of Elementary and Secondary Education

Indian Education Programs; Formula Grants; Local Educational Agencies and Tribal Schools; Extension of Closing Date; New Applications

AGENCY: Department of Education.

ACTION: Notice of extension of closing date for transmittal of new applications for Fiscal Year 1988 Assistance under the Formula Grants—Local Educational Agencies and Tribal Schools Program.

SUMMARY: This notice extends the closing date of February 12, 1988 to April 22, 1988, for the transmittal of new applications under the Formula Grants—Local Educational Agencies and Tribal Schools Program (84.060A). The application notice for this program, published in the **Federal Register** on September 25, 1987 (52 FR 36090), provides detailed information concerning the program.

SUPPLEMENTARY INFORMATION: To ensure that awards under this formula grant program are issued in sufficient time to inform grantees of the amount of their grants for the following school year, closing dates are established annually for submission of applications. These dates are published in the **Federal Register.**

As a courtesy, the Department also mails application packages to all current grantees under the program. In addition, newsletters announcing the closing date are sent to current grantees by the five Resource and Evaluation Centers established under the Indian Education Act to provide technical assistance to grantees and potential applicants for Indian Education Act funds. The notice establishing the closing date for applications for fiscal year 1988 grants was published on September 25, 1987. Application packages were mailed on November 6, 1987.

In February 1988, the Department received 1,090 grant applications. Thirty-two school districts currently participating in the program have notified the Department that they were unaware of the deadline, or in a few cases, missed the postmark deadline as a result of unavoidable circumstances. The Department has determined that

this reduction in school district participation would represent a loss of services to approximately 3,400 eligible Indian students enrolled in these districts. Many school districts that need the financial assistance provided under this program cannot afford to subscribe to the **Federal Register**. Further, while the Department has attempted in the past three years to establish annual closing dates in February so that LEAs may plan accordingly and request application packages if they have not received them reasonably in advance of that month, the dates were extended in those years due to special circumstances. As a result, many LEAs may have expected a closing date later in the year.

The extension of the closing date to April 22, 1988, will enable all eligible applicants to apply or to amend their applications at their discretion. This extension will not substantially alter the schedule for issuance of grant awards.

FOR FURTHER INFORMATION CONTACT: Inquiries concerning this extension should be addressed to Ms. Julie Lesceux, Indian Education Programs, Office of Elementary and Secondary Education, U.S. Department of Education, 400 Maryland Avenue SW., Room 2177 (Mail Stop 6267), Washington, DC 20202, Telephone (202) 732-5146.

(20 U.S.C. 241aa-241ff)

(Catalog of Federal Domestic Assistance Number 84.060, Formula Grants—Local Educational Agencies and Tribal Schools)

Dated: March 31, 1988.

Beryl Dorsett,

Assistant Secretary for Elementary and Secondary Education.

[FR Doc. 88-7543 Filed 4-5-88; 8:45 am]

BILLING CODE 4000-01-M

DEPARTMENT OF ENERGY

Economic Regulatory Administration

[ERA Docket No. 88-03-NG]

TXG Gas Marketing Co.; Order Granting Blanket Authorization To Import Natural Gas

AGENCY: Economic Regulatory Administration; DOE.

ACTION: Notice of order granting blanket authorization to import natural gas.

SUMMARY: The Economic Regulatory Administration (ERA) of the Department of Energy (DOE) gives notice that it has issued an order granting TXG Gas Marketing Company (TXG Marketing) blanket authorization to import natural gas. The order issued in ERA Docket No. 88-03-NG authorizes TXG Marketing to import up to 73 Bcf of natural gas over two-year period beginning on the date of first delivery.

A copy of this order is available for inspection and copying in the Natural Gas Division Docket Room, GA-076, Forrestal Building, 1000 Independence Avenue, SW., Washington, DC, 20585, (202) 586-9478. The Docket room is open between the hours of 8:00 a.m. and 4:30 p.m., Monday through Friday, except Federal holidays.

Issued in Washington, DC, March 31, 1988.

Constance L. Buckley,

Director, Natural Gas Division, Office of Fuels Programs, Economic Regulatory Administration.

[FR Doc. 88-7470 Filed 4-5-88; 8:45 am]

BILLING CODE 6450-01-M

[ERA No. 88-10-NG]

Woodward Marketing, Inc.; Application To Import Natural Gas From and Export Natural Gas To Canada

AGENCY: Economic Regulatory Administration, DOE.

ACTION: Notice of application for blanket authorization to import natural gas from and export natural gas to Canada.

SUMMARY: The Economic Regulatory Administration (ERA) of the Department of Energy (DOE) gives notice of receipt on March 14, 1988, of an application filed by Woodward Marketing, Inc. (Woodward Marketing) to import up to 100 Bcf of domestic U.S. natural gas over a two-year term beginning on the date of first delivery. Woodward Marketing, Texas, would import or export gas for its own account or act as a broker for both U.S. and Canadian purchasers and suppliers. Woodward Marketing intends to utilize existing pipeline facilities for transportation of the volumes to be imported or exported. Woodward Marketing also proposes to submit quarterly reports detailing each transaction.

The application is filed with the ERA pursuant to section 3 of the Natural Gas Act and DOE Delegation Order No. 0204-111. Protests, motions to intervene, notices of intervention and written comments are invited.

DATE: Protests, motions to intervene or notices of intervention, as applicable, request for additional procedures and written comments are to be filed no later than May 6, 1988.

FOR FURTHER INFORMATION CONTACT:

Tom Dukes, Natural Gas Division, Economic Regulatory Administration, Forrestal Building, Room GA-076, 1000 Independence Avenue SW., Washington, DC 20585 (202) 586-9590

Diane Stubbs, Natural Gas and Mineral Leasing, Office of General Counsel, U.S. Department of Energy, Forrestal Building, Room 6E-042, 1000 Independence Avenue SW., Washington, DC 20585 (202) 586-6667.

SUPPLEMENTARY INFORMATION: Under the instant import/export authority sought, Woodward Marketing intends to make natural gas sales to either United States or Canadian customers on both a firm and interruptible spot basis. The specific terms of each import or export sale would be negotiated on an individual basis, including price and volume. Woodward Marketing asserts that the sale of Canadian natural gas imports will be made pursuant to terms dictated by the prevailing economic conditions in the domestic market and that surplus U.S. natural gas supplies will be exported to Canada on the basis of their competitiveness and need by U.S. purchasers.

The decision on the application for import authority will be made consistent with the DOE's gas import policy guidelines, under which the competitiveness of an import arrangement in the markets served is the primary consideration in determining whether it is in the public interest (49 FR 6684, February 22, 1984). In reviewing natural gas export applications, the ERA considers the domestic need for the gas to be exported, and any other issue determined by the Administrator to be appropriate in a particular case. Parties that may oppose this application should comment in their responses on the issue of competitiveness as set forth in the policy guidelines for the import authority and on the domestic need for the gas in their responses on the requested export authority. The applicant asserts that this import/export arrangement will be in the public interest in that the pricing terms for each import/export sale must be competitive in the U.S. and Canadian gas markets served or no sales will be made. Parties opposing the arrangement bear the burden of overcoming this assertion.

Public Comment Procedures

In response to this notice, any person may file a protest, motion to intervene or notice of intervention, as applicable, and written comments. Any person wishing to become a party to the proceeding and to have the written comments considered as the basis for any decision on the application must, however, file a motion to intervene or notice of intervention, as applicable. The filing of a protest with respect to

this application will not serve to make the protestant a party to the proceeding, although protests and comments received from persons who are not parties will be considered in determining the appropriate action to be taken on the application. All protests, motions to intevene, notices of intervention, and written coments must meet the requirements that are specified by the regulations in 10 CFR Part 590.

Protests, motions to intervene, notices of intervention, requests for additional procedures, and written comments should be filed with the Natural Gas Division, Office of Fuels Programs, Economic Regulatory Adminsitration, Room GA-076, RG-23, Forrestal Building, 1000 Independence Avenue SW., Washington, DC 20585, (202) 586-9478. They must be filed no later than 4:30 p.m. e.d.t., May 6, 1988.

The Administrator intends to develop a decisional record on the application through responses to this notice by parties, including the parties' written comments and replies thereto. Additional procedures will be used as necessary to achieve a complete understanding of the facts and issues. A party seeking intervention may request that additional procedures be provided, such as additional written comments, an oral presentation, a conference, or trial-type hearing. Any request to file additional written comments should explain why they are necessary. Any request for an oral presentation should identify the substantial question of fact, law, or policy at issue, show that it is material and relevant to a decision in the proceeding, and demonstrate why an oral presentation is needed. Any request for a conference should demonstrate why the conference would materially advance the proceeding. Any request for a trial-type hearing must show that there are factual issues genuinely in dispute that are relevant and material to a decision and that a trial-type hearing is necessary for a full and true disclosure of the facts.

If an additional procedure is scheduled, the ERA will provide notice to all parties. If no party requests additional procedures, a final opinion and order may be issued based on the official record, including the application and responses filed by parties pursuant to this notice, in accordance with 10 CFR 590.316.

A copy of Woodward Marketing's application is available for inspection and copying in the Natural Gas Division Docket Room, GA-076 at the above address. The docket room is open between the hours of 8:00 a.m. and 4:30 p.m., Monday through Friday, except Federal holidays.

Issued in Washington, DC, March 29, 1988

Constance L. Buckley,

Director, Natural Gas Division, Office of Fuels Programs, Economic Regulatory Administration.

[FR Doc. 88-7469 Filed 4-5-88, 8:45 am]

BILLING CODE 6450-01-M

Federal Energy Regulatory Commission

[Docket No. ER35-109-000 et al.]

Niagara Mohawk Power Corp. et al.; Electric Rate and Corporate Regulation Filings; Small Power Production and Cogeneration Facilities

March 30, 1988.

Take notice that the following filings have been made with the Commission:

1. Niagara Mohawk Power Corp.

[Docket No. ER85-109-000]

Take notice that on March 21, 1988, Niagara Mohawk Power Corporation (Niagara Mohawk) tendered for filing, pursuant to Ordering Paragraph (C) of Opinion No. 296, a revised rate and a superseding rate schedule sheet in accordance with Opinion No. 296.

Comment date: April 14, 1988, in accordance with Standard Paragraph E at the end of this notice.

2. Idaho Power Co.

[Docket No. ER88-299-000]

Take notice that on March 25, 1988, Idaho Power Company tendered for filing in compliance with the Federal Energy Regulatory Commission's Order of October 7, 1978, a summary of sales made under the Company's 1st Revised FERC Electric Tariff, Volume No. 1 (Supersedes Original Volume No. 1) during February 1988, along with cost justification for the rate charged. This filing includes the following supplements:

Pacific Gas & Electic Co.—Supplement No. 31

Montana Power Company—Supplement No. 56

Sacramento Municipal Utility Dist.—Supplement No. 6

Sierra Pacific Power Co.—Supplement No. 73

Utah Power & Light Co.—Supplement No. 75

Washington Water Power Company—Supplement No. 56

Comment date: April 14, 1988, in accordance with Standard Paragraph E at the end of this notice.

3. Holyoke Water Power Co.

[Docket No. ER84-574-005]

Take notice that on March 25, 1988, Holyoke Water Power Company and Holyoke Power and Electric Company tendered for filing, pursuant to Commission Order dated February 8, 1988, a compliance report and the following:

Attachment A—Monthly billing determinants and revenues at present and compliance rate for the period March 5, 1987 through March 9, 1988.

Attachment B—Revenues under prior rates which reflect the billing terms in effect prior to Docket No. ER84-574-000.

Attachment C—Computation of the additional monthly charges, including interest, for the monthly bills for the period March 5, 1987 through March 9, 1988. Revenue receipt dates are included.

Copies of this filing have been served upon all parties affected by this proceeding.

Comment date: April 14, 1988, in accordance with Standard Paragraph E at the end of this notice.

Standard Paragraph

E. Any person desiring to be heard or to protest said filing should file a motion to intervene or protest with the Federal Energy Regulatory Commission, 835 North Capitol Street, NW., Washington, DC 20426, in accordance with Rules 211 and 214 of the Commission's Rules of Practice and Procedure (18 CFR 385.211 and 385.214). All such motions or protests should be filed on or before the comment date. Protests will be considered by the Commission in determining the appropriate action to be taken, but will not serve to make protestants parties to the proceeding. Any person wishing to become a party must file a motion to intervene. Copies of this filing are on file with the Commission and are available for public inspection.

Lois D. Cashell,

Acting Secretary.

[FR Doc. 88-7482 Filed 4-5-88; 8:45 am]

BILLING CODE 6717-01-M

[Docket Nos. CP88-288-000 et al.]

Southern Natural Gas Co. et al.; Natural Gas Certificate Filings

Take notice that the following filings have been made with the Commission:

1. Southern Natural Gas Co.

[Docket No. CP88-288-000]

March 30, 1988.

Take notice that on March 10, 1988, Southern Natural Gas Company

(Southern), P.O. Box 2563, Birmingham, Alabama 35202, filed in Docket No. CP88-288-000 an application pursuant to section 7(b) of the Natural Gas Act to abandon Marvyn Gate Regulator Station and appurtenances located near Montgomery County, Alabama.

Southern requests authority to abandon the Marvyn Gate Regulatory Station. Southern states that the facilities it seeks to abandon were installed in 1950 pursuant to a certificate of public convenience and necessity issued to Southern in Docket No. G-1308 and consist of the Marvyn Gate Regulator Station and appurtenances located at Milepost 173.110 on Southern's 10-inch Montgomery-Columbus line. It is stated that prior to the installation of Southern's 8-inch Phenix City line these facilities were needed to enable gas to be shifted from Southern's 16-inch South Main line to its 10-inch Montgomery-Columbus line in order to have an alternate feed for the Phenix City-Columbus area. As part of its annual pipeline replacement program, Southern states that it plans to replace this summer, the segment of its Montgomery-Columbus line where the Marvyn Gate Regulator Station is located. It is stated that because the regulatory station is no longer necessary as an alternate feed for the Phenix City-Columbus area, Southern does not want to incur the costs involved in modifying and reconnection these facilities to the replacement pipelines. It is indicated that the proposed abandonment will not affect the capacity of Southern's pipeline system or require termination of any service to Southern's cutomers.

Accordingly, Southern requests the Commission to issue an order authorizing the abandonment of the regulatory station and appurtenances as proposed herein. Upon receipt of such authorization, the regulator station and appurtenances will be removed and the facility will be retired.

Comment date: April 20, 1988, in accordance with Standard Paragraph F at the end of this notice.

2. Columbia Gas Transmission Corp.

[Docket No. CP88-13-000]

March 31, 1988.

Take notice that on October 7, 1987, Columbia Gas Transmission Corporation (Columbia), 1700 MacCorkle Avenue, SE. Charleston, West Virginia 25314, filed in Docket No. CP88-13-000 a request pursuant to § 157.205 of the Commission's Regulations under the Natural Gas Act (18 CFR 157.205) for authorization to construct and operate a delivery point and related facilities under the authorization issued to Columbia in Docket No. CP83-76-000 for a new point of delivery to T.W. Phillips Gas and Oil Company (Phillips), all as more fully set forth in the request on file with the Commission and open to public inspection.

Columbia proposes to construct and operate the facilities necessary to provide a new point of delivery to an existing wholesale customer, Phillips, for residential, commercial, and industrial service. Columbia states that this new point of delivery has been requested by Phillips to meet anticipated demand and to enhance Phillips' system deliverability and supply diversity, along with the opportunity to access the interstate spot market through transportation arrangements on the Columbia system. In this regard, it is stated that Columbia has agreed to provide 2,000 dth per day of FTS service to Phillips.

It is stated that the volumes to be provided through the new point of delivery would be within Columbia's authorized level of sales and such volumes would not affect the peak day and annual deliveries to which Phillips would be entitled.[1] Columbia further states that the sales to be made from the proposed point of delivery would be under its currently effective contract demand service rate schedule.

Comment date: May 16, 1988, in accordance with Standard Paragraph G at the end of this notice.

3. Northern Natural Gas Co., Division of Enron Corp.

[Docket No. CP88-304-000]

March 31, 1988.

Take notice that on March 18, 1988, Northern Natural Gas Company, Division of Enron Corporation, (Northern), 2223 Dodge Street, Omaha, Nebraska 68102, filed in Docket No. CP88-304-000 an application pursuant to section 7(b) of the Natural Gas Act for permission and approval to abandon by sale a compressor station in Andrews County, Texas, all as more fully set forth in the application which is on file with the Commission and open to public inspection.

Northern proposes to abandon the 5,200 horsepower Andrews Compressor Station (Andrews Station) by selling it to Regal Gas Corporation for $660,000. Northern explains that the reason for the abandonment is that Northern was receiving gas from Phillips Petroleum Company (Phillips) at a point adjacent to the Andrews Station, but Phillips' delivery point has been relocated. Northern asserts that the relocation means that the compression facilities are no longer needed.

It is stated that the proposed abandonment would not cause any termination of service to Northern's customers.

Comment date: April 21, 1988, in accordance with Standard Paragraph F at the end of this notice.

Standard Paragraphs

F. Any person desiring to be heard or make any protest with reference to said filing should on or before the comment date file with the Federal Energy Regulatory Commission, 825 North Capitol Street, N.E., Washington, DC 20426, a motion to intervene or a protest in accordance with the requirements of the Commission's Rules of Practice and Procedure (18 CFR 385.211 and 385.214) and the Regulations under the Natural Gas Act (18 CFR 157.10). All protests filed with the Commission will be considered by it in determining the appropriate action to be taken but will not serve to make the protestants parties to the proceeding. Any person wishing to become a party to a proceeding or to participate as a party in any hearing therein must file a motion to intervene in accordance with the Commission's Rules.

Taken further notice that, pursuant to the authority contained in and subject to jurisdiction conferred upon the Federal Energy Regulatory Commission by sections 7 and 15 of the Natural Gas Act and the Commission's Rules of Practice and Procedure, a hearing will be held without further notice before the Commission or its designee on this filing if no motion to intervene is filed within the time required herein, if the Commission on its own review of the matter finds that a grant of the certificate is required by the public convenience and necessity. If a motion for leave to intervene is timely filed, or if the Commission on its own motion believes that a formal hearing is required, further notice of such hearing will be duly given.

Under the procedure herein provided for, unless otherwise advised, it will be unnecessary for the applicant to appear or be represented at the hearing.

G. Any person or the Commission's staff may, within 45 days after the issuance of the instant notice by the Commission, file pursuant to Rule 214 of

[1] Phillips and Acme Natural Gas Company (Acme) have agreed to merge Acme into Phillips. Columbia is concurrently herewith filing an application to partially abandon service to Acme, whereby its contract demand would be reduced from 19,860 dth per day to 4,750 dth per day. Following the merger of Acme into Phillips, Phillips' contract demand from Columbia under Rate Scheduel CDS would be 5,000 dth per day.

the Commission's Procedural Rules (18 CFR 385.214) a motion to intervene or notice of intervention and pursuant to § 157.205 of the Regulations under the Natural Gas Act (18 CFR 157.205) a protest to the request. If no protest is filed within the time allowed therefore, the proposed activity shall be deemed to be authorized effective the day after the time allowed for filing a protest. If a protest is filed and not withdrawn within 30 days after the time allowed for filing a protest, the instant request shall be treated as an application for authorization pursuant to Section 7 of the Natural Gas Act.

Lois D. Cashell,

Acting Secretary.

[FR Doc. 88-7481 Filed 4-5-88; 8:45 am]

BILLING CODE 6717-01-M

[Docket No. RP88-85-000]

ANR Pipeline Co.; Petition for Waiver of Regulations Under Order No. 483

April 1, 1988.

Take notice that on March 3, 1988, ANR Pipeline Company (ANR) tendered for filing a petition for waiver of regulations under Order No. 483.

ANR states that pursuant to Order No. 483 it must make four PGA filings between March 31 and October 1, 1988. ANR recognizes that the Commission wants all pipelines to implement the new PGA regulations at the same time and will file the new terms and conditions of its FERC Gas Tariff on May 1, 1988. However, ANR requests a waiver of the two PGA filings of May 1 and July 1, 1988, pointing out that it cannot develop and implement a reliable quarterly cost projection process in time, and that it is in the process of implementing new accounting and computer systems to prepare its March 31, 1988 PGA filing and cannot begin the further conversion until after it files its last PGA under existing rules. If this waiver is granted, ANR states it would file its first rate adjustment on October 1, 1988 and would make all required subsequent quarterly and annual filings.

In the event the Commission does not grant ANR's request for a waiver of the May 1 and July 1 filing, ANR requests waiver of these filing to be on magnetic tape and states that it would supply as much information as possible on 9-track magnetic tape with the remainder on hard copy and on a PC disk.

ANR states that Order No. 483 requires ANR to make cash refunds within 30 days after a trigger mechanism is activated and ANR requests permanent waiver of the 30-day deadline to allow 90 days for making cash refunds. ANR states that 30 days is not enough time within which to assess whether the trigger has been activated and make cash refunds.

Any person desiring to be heard or to protest said filing should file a motion to intervene or a protest with the Federal Energy Regulatory Commission, 825 North Capitol Street, NE., Washington, DC 20426, in accordance with Rules 214 and 211 of the Commission's Rules of Practice and Procedure (18 CFR 385.214, 385.211 (1987)). All such motions or protests should be filed on or before April 8, 1988. Protests will be considered by the Commission in determining the appropriate action to be taken, but will not serve to make protestants parties to the proceeding. Any person wishing to become a party must file a motion to intervene. Copies of this filing are on file with the Commission and are available for public inspection.

Lois D. Cashell,

Acting Secretary.

[FR Doc. 88-7558 Filed 4-5-88; 8:45 am]

BILLING CODE 6717-01-M

[Docket Nos. RP86-136-000]

National Fuel Gas Supply Corp.; Informal Settlement Conference

(April 1, 1988).

Take notice that an informal settlement conference will be convened in the above proceeding on April 14, 1988, at 10:00 a.m. at the offices of the Federal Energy Regulatory Commission, 825 North Capitol Street, NE., Washington, DC., 20426.

Any party, as defined by 18 CFR 385.102(c), is invited to attend. Persons wishing to become a party must move to intervene and receive intervenor status pursuant to the Commission's regulations (18 CFR 385.214).

For additional information, contact John C. Walley (202) 357-8458, or Robert C. Fallon (202) 357-8461.

Lois D. Cashell,

Acting Secretary.

[FR Doc. 88-7559 Filed 4-5-88; 8:45 am]

BILLING CODE 6171-01-M

[Docket Nos. RP88-42-000]

Pacific Offshore Pipeline Co.

(April 1, 1988).

Take notice that an informal conference will be convened in the above proceeding on April 21, 1988, at 10:00 a.m. at the offices of the Federal Energy Regulatory Commission, 825 North Capitol Street, NE., Washington, DC., 20426.

Any party, as defined by 18 CFR 385.102(c), is invited to attend. Persons wishing to become a party must move to intervene and receive intervenor status pursuant to the Commission's regulations (18 CFR 385.214).

For additional information, contact John C. Walley (202) 357-8458, or Anja M. Clark (202) 357-5740.

Lois D. Cashell,

Acting Secretary.

[FR Doc. 88-7560 Filed 4-5-88; 8:45 am]

BILLING CODE 6717-01-M

[Docket No. RP88-89-000]

Ringwood Gathering Co.; Request for Waiver

April 1, 1988.

Take notice that on March 25, 1988, Ringwood Gathering Company (Ringwood) filed a request for waiver of the May 1, 1988 filing deadline and temporary waiver of the nine-track magnetic computer tape filing requirement.

Ringwood requests that the Commission grant it a three-month waiver of the May 1, 1988 filing deadline. The term of the waiver would coincide with the August 1, 1988 annual PGA filing. Ringwood states the waiver would also include a waiver of the June 1, 1988 quarterly filing. Ringwood states that it is in the process of implementing a new accounting process and is unsure whether it will have compiled sufficient data to make a valid May 1, 1988 filing.

Ringwood requests a three-month waiver of the nine-track magnetic tape requirement stating that it has never submitted a PGA filing on magnetic tape and development of computer software sufficient to submit a PGA filing would be time consuming and expensive relative to Ringwood's size and rate base. While Ringwood will make every effort to fully comply with the regulations, Ringwood reserves the right to seek a permanent waiver after its accounting transition is complete and it has been able to fully evaluate the expense of compliance.

Any person desiring to be heard or to protest said filing should file a motion to intervene or a protest with the Federal Energy Regulatory Commission, 825 North Capitol Street, NE., Washington, DC. 20426, in accordance with Rules 214 and 211 of the Commission's Rules of Practice and Procedure (18 CFR 385.214,

385.211 (1987)). All such motions or protests should be filed on or before April 8, 1988. Protests will be considered by the Commission in determining the appropriate action to be taken, but will not serve to make protestants parties to the proceeding. Any person wishing to become a party must file a motion to intervene. Copies of this filing are on file with the Commission and are available for public inspection.

Lois D. Cashell,

Acting Secretary.

[FR Doc. 88-7561 Filed 4-5-88; 8:45 am]

BILLING CODE 6717-01-M

[Docket No. RP87-33-008]

Williams Natural Gas Co.; Proposed Changes in FERC Gas Tariff

April 1, 1988.

Take notice that on March 24, 1988, Williams Natural Gas Company (WNG) tendered for filing a corrected tariff sheet to its FERC Gas Tariff. On March 9, 1988, WNG tendered for filing revised tariff sheets in Docket No. RP87-33-007. Pursuant to discussions with FERC Staff, WNG has noted an irregularity in a certain tariff sheet and is tendering the following revised tariff sheet to correct such. The instant tariff sheet is filed only to make it consistent with the entire filing.

Original Volume No. 2

Revised First Revised Sheet No. 252

WNG respectfully requests that the instant tariff sheet be incorporated into its March 9, 1988 filing.

Any person desiring to be heard or to protest said filing should file a motion to intervene or protest with the Federal Energy Regulatory Commission, 825 North Capitol Street NE., Washington, DC 20426, in accordance with §§ 385.211 and 385.214 of the Commission's Rules of Practice and Procedure (18 CFR 385.211, 385.214). All such motions or protests should be filed on or before April 8, 1988. Protests will be considered by the Commission in determining the appropriate action to be taken but will not serve to make protestants parties to the proceeding. Any person wishing to become a party must file a motion to intervene. Copies of this filing are on file with the Commission and are available for public inspection.

Lois D. Cashell,

Acting Secretary.

[FR DOc. 88-7562 Filed 4-5-88; 8:45 am]

BILLING CODE 6717-01-M

[Docket No. CP87-479-000, et al., Docket No. CP85-437-000, et al., and Docket No. CP85-552-000, et al.]

Wyoming-California Pipeline Co. et al.; Applications

In the matter Wyoming-California Pipeline Co., Mojave Pipeline Co., *et al.*, and Kern River Gas Transmission Co., *et al.*; pipeline projects to supply natural gas for enhanced oil recovery in California; notification of schedule for public scoping meetings on environmental issues to be addressed in the environmental impact statement on the proposed Wyoming-California pipeline.

April 4, 1988

The staff of the Federal Energy Regulatory Commission (FERC) hereby announces its schedule of public scoping meetings to be held jointly with the California State Lands Commission (SLC) in the dockets referenced above. The meetings will be conducted to identify the scope and significance of environmental impact associated with the proposed Wyoming-California Pipeline Company (WyCal) project. WyCal is one of three competing applicants proposing to construct new interstate pipeline facilities and transport natural gas from various sources outside of California to the Bakersfield, California area for use in enhanced oil recovery (EOR) and related cogeneration projects.

Background

During 1985, three applications were filed with the Commission to serve the EOR market. Specifically, Kern River Gas Transmision Company (Kern River) proposed to build an 837-mile pipeline (Docket No. CP85-552-000); Mojave Pipeline Company (Mojave) proposed to build a 389-mile pipeline (Docket No. CP85-437-000); and El Dorado Interstate Transmission Company (El Dorado) proposed to build a 381-mile pipeline (Docket No. CP85-625-000).[1] The Commission's "Notice of Intent to Prepare A Draft Environmental Impact Statement" for these proposals was published in the **Federal Register** on August 23, 1985 (50 FR 34, 174) and supplemented on December 13, 1985, and May 19 and June 30, 1986 (50 FR 50,941, FR 18,357 and 23,579). These notices identified that the SLC was working with the FERC staff to produce a joint environmental impact report/statement (EIR/EIS). During February 1986, six scoping meetings were announced and subsequently held at Albuquerque, new Mexico; Flagstaff, Arizona; Barstow, California; Bakersfield California; Heber City, Utah; and Las Vegas, Nevada (51 FR 3,402). An additional scoping meeting was held in Grand Junction, Colorado in July 1986 (51 FR 23,580) to discuss an alternative associated with the Mojave proposal. The Draft EIR/EIS was released and noticed in the **Federal Register** on January 23, 1987 (52 FR 2,584). Public meetings to receive comments on the Draft EIR/EIS were announced and subsequently held during the week of March 23, 1987 in Bakersfield and Barstow, California; Las Vegas, Nevada; and Salt Lake City, Utah (52 FR 6,379). The Final EIR/EIS for the Kern River/Mojave projects was released to the public on December 18, 1987, and noticed in the **Federal Register** on December 24, 1987 (52 FR 48,753). Formal evidentiary hearings began at FERC on September 9, 1987 before Administrative Law Judge Isaac D. Benkin and are ongoing. The Final EIR/EIS was placed into this evidentiary hearing with accompanying FERC staff testimony on December 24, 1987. The environmental phase of the hearing to determine the adequacy of the Final EIR/EIS will commence April 12, 1988.

On August 4, 1987, WyCal filed its application with FERC to transport natural gas from various sources outside of California to the Bakersfield, California area for use in EOR and related cogeneration projects. On December 14, 1987, four days prior to the release of the Kern River/Mojave FEIS, the FERC issued a notice of intent to prepare a Supplement to this FEIS in order to analyze the WyCal project. The forthcoming Supplement to this FEIS will address only those aspects of the WyCal project not previously addressed in the FEIS for the Kern River and Mojave projects.

The proposed WyCal pipeline deviates from Kern River's proposal at the northern end of the project from Opal to Evanston, Wyoming for approximately 52 miles. From that point on, except as noted below, WyCal proposes to follow the very same right-of-way (ROW) which Kern River proposed from a point approximately 5 miles east of Evanston, Wyoming to Kern River's proposed Milepost (MP) 480 south of Dry Lake, Nevada and four miles east of Apex, Nevada. From this point, the WyCal route deviates to the west of Kern River's proposal until it recrosses the route at Kern River's MP 486. The WyCal route then deviates to the east until it intersects with MP 6 of the East Las Vegas System Alternative route identified in the Final EIR/EIS. WyCal would follow the very same

[1] The El Dorado application was subsequently dismissed from the FERC proceeding on October 20, 1987. While the FEIS examines portions of the El Dorado route as an alternative, it is no longer a competitor to Mojave, Kern River or WyCal.

ROW examined along this alternative to Piute Junction, California where it would interconnect with the route proposed by Mojave. WyCal then proposes to follow the exact same ROW Mojave proposes both east to Topock, Arizona and west to Bakersfield, California. Since the proposed WyCal project is on the very same ROW proposed by both Kern River and Mojave in many areas, a significant amount of work has already been completed relevant to the environmental impact caused by the construction and operation of the pipeline. The Supplemental EIS can therefore be structed in such a way as to tier or build upon the Final EIR/EIS issued in December 1987. The tiering process is encouraged in § 1502.20 of the Council on Environmental Quality regulations implementing the National Environmental Policy Act. The Supplemental EIS issued pursuant to this notice will therefore only address those areas of the WyCal project which deviate from the Mojave and Kern River proposals and the East Las Vegas route alternative previously analyzed in the FEIS. Deviations of compressor site locations will also be examined in the Supplemental EIS.

Locations and Purpose Public Meetings

The purpose of this notice is to announce that joint public scoping meetings, similar to those conducted in 1986 for the Kern River and Mojave proposals, will now be held for the WyCal proposal. The cities of Salt Lake City, Utah, and Las Vegas, Nevada, have been selected as meeting locations for two reasons. In the past, these locations have been used for public meetings on the EOR proposals, and have been well attended by numerous interested parties. Further, both locations are appropriate from the standpoint that the focus of the Supplemental EIS will be on those areas where the WyCal route deviates from that previously reviewed for either Kern River or Mojave.

The meetings will begin promptly at 7:00 p.m. at the following two locations:

Monday, April 18, 1988—Board Room of the Clark County School District Education Center, 2832 East Flamingo Road, Las Vegas, NV

Wednesday, April 20, 1988—State Office Building Auditorium (immediately behind the State Capitol Building), 500 North State Street, Salt Lake City, UT

The staff intends to conduct aerial and on-site reviews of the areas where WyCal deviates from the Kern River and Mojave routes, and variations to these routes in the Las Vegas and Salt Lake City areas. The staff also intends to meet with local government officials, as appropriate.

As referenced in past notices, the public scoping meetings are intended as an opportunity for state and local governments and the general public to provide information and assistance directly to the FERC staff and the SLC in defining the range of environmental issues and concerns that need to be addressed in the impact analysis. As previously stated, Federal agencies with an interest in the proposals have formal channels for input into the analysis and are expected to coordinate their comments through the lead Federal agency outside the public meeting forum.

Further information concerning the WyCal public scoping meetings or about the EOR proposals in general is available from either of the following individuals:

Mr. Robert K. Arvedlund, Room 7312-J, Environmental Analysis Branch, OPPR, Federal Energy Regulatory Commission, 825 North Capitol Street, Washington, DC 20426, Telephone (202) 357-9091

or

Ms. Mary Griggs, California State Lands Commission, 1807-13th Street, Sacramento, CA 95814, Telephone (916) 322-0354

Lois Cashell,

Acting Secretary.

[FR Doc. 88-7557 Filed 4-5-88; 8:45 am]

BILLING CODE 6717-01-M

ENVIRONMENTAL PROTECTION AGENCY

[ER-FRL-3357-W]

Upgrading and Enlargement of Municipal Wastewater Treatment Facilities in the City of New Bedford, MA; Intent To Prepare an Environmental Impact Statement

AGENCY: U.S. Environmental Protection Agency (EPA), Region I.

ACTION: Notice of intent to prepare an Environmental Impact Statement (EIS) on the upgrading and enlargement of the City of New Bedford, MA municipal wastewater facilities including treatment plant and sludge disposal facilities.

Purpose: In accordance with EPA procedures on the implementation of the National Environmental Policy Act, 40 CFR Part 6, the EPA will prepare an EIS on the proposed wastewater management program. This Notice of Intent is issued pursuant to 40 CFR 6.510(a)(1).

For Further Information and to be Placed on the Project Mailing List Contact: Susan S. Coin, Environmental Engineer, U.S. EPA Region I, JFK Federal Building, WQE-1900, Boston, MA 02203, Telephone: (Commercial) (617) 565-4425 or (FTS) 835-4425.

Summary and Need for Action

The City of New Bedford discharges partially-treated primary wastewater effluent into Buzzards Bay. In addition, numerous sewer system outlets discharge raw wastewater into New Bedford Harbor and Clark's Cove. Both actions are in violation of the Clean Water Act, 33 U.S.C. 1251 *et seq.*

In response to a Federal District Court Consent Decree, the City of New Bedford is developing plans for upgrading the municipal wastewater treatment facilities from primary to secondary treatment, increasing plant capacity to provide for treating mixed wastewater and stormwater, and upgrading and enlarging sludge disposal facilities.

EPA actions may include providing federal grants for the construction of wastewater treatment facilities and issuing associated permits.

Significant Issues and Alternatives

- The EIS/EIR and facilities plan will examine a full range of options for siting the facilities.
- Alternative technologies for waste and sludge treatment and sludge disposal alternatives such as incinerators, composting systems, and landfills will be evaluated. In addition, sludge transport routes and modes will be evaluated and selected.
- Relationships between clean-up options for the hazardous PCB-laden sediment deposits in New Bedford Harbor and the wastewater management facilities will be defined.
- Multi-disciplinary factors associated with alternative wastewater management systems and sites will be assessed, focusing on the affected environment and the environmental consequences of alternatives.
- Mitigating measures will be proposed to deal with all significant negative impacts.

Scoping

EPA Region I, and the Massachusetts Executive Office of Environmental Affairs held a joint EIS/EIR scoping meeting on March 23, 1988. The purpose of the meeting was to ascertain public and agency views on the issues that should be addressed in the EIS and in the EIR.

A preliminary scope of work for the EIS is now available. For thirty(30) days from the publication of this Notice of Intent, EPA will be accepting written comments on both the proposed scope of work and any other issues that should be considered in the EIS.

Estimated Date of Draft EIS Release: December, 1988.

Responsible Official: Michael R. Deland, Regional Administrator.

Richard E. Sanderson,

Director, Office of Federal Activities.

[FR Doc. 88-7520 Filed 4-5-88; 8:45 am]

BILLING CODE 6560-50-M

[OPP-180771; FRL-3359-8]

Receipt of an Application for a Specific Exemption to Use Avermectin B_1; Solicitation of Public Comment

AGENCY: Environmental Protection Agency (EPA).

ACTION: Notice.

SUMMARY: EPA has received a specific exemption request from the Washington Department of Agriculture (hereafter referred to as the "Applicant") for use of avermectin B_1 (Agrimec 0.15 EC Miticide/Insecticide") to control two-spotted spider mites (*Tetranychus urticae*); European red mites (*Panonychus ulmi*); and McDaniel spider mites (*Tetranychus mcdanielii*) on 19,400 acres of pears in Washington. Avermectin B_1 (CAS 63AB) contains a mixture of avermectins containing $\geqslant$ 80% avermectin B_{1a} (5-0-demethyl avermectin A_{1a}) and $\leqslant$ 20% avermectin B_{1b} (5-0-demethyl-25-de(1-methylpropyl-25-(l-methylethyl)avermectin A_{1a}). In accordance with 40 CFR 166.24, EPA is soliciting comment before making the decision whether or not to grant this specific exemption request.

DATE: Comments must be received on or before April 21, 1988.

ADDRESS: Three copies of written comments, bearing the identification notation "OPP-180771" should be submitted by mail to:

Information Services Section, Program Management and Support Division (TS-757C), Office of Pesticide Programs, Environmental Protection Agency, 401 M St., SW., Washington, DC 20460.

In person, bring comments to: Rm. 246, Crystal Mall #2, 1921 Jefferson Davis Highway, Arlington, VA.

Information submitted as a comment concerning this notice may be claimed confidential by marking any part or all of that information as "Confidential Business Information (CBI)." Information so marked will not be disclosed except in accordance with procedures set forth in 40 CFR Part 2. A copy of the comment that does contain CBI must be submitted for inclusion in the public record. Information not marked confidential may be disclosed publicly by EPA without prior notice to the submitter. All written comments will be available for inspection in Rm. 246 at the address given above from 8 a.m. to 4 p.m., Monday through Friday, excluding legal holidays.

FOR FURTHER INFORMATION CONTACT:

By mail: Libby Pemberton, Registration Division (TS-767C), Office of Pesticide Programs, Environmental Protection Agency, 401 M St., SW., Washington, DC 20460.

Office location and telephone number: Rm. 716, Crystal Mall #2, 1921 Jefferson Davis Highway, Arlington, VA, (703-557-1806).

SUPPLEMENTARY INFORMATION: Pursuant to section 18 of the Federal Insecticide, Fungicide, and Rodenticide Act (FIFRA) (7 U.S.C. 136p), the Administrator may, at his discretion, exempt a State agency from any provisions of FIFRA if he determines that emergency conditions exists which require such exemption.

The Applicant has requested the Administrator to issue a specific exemption for the use of avermectin B_1, manufactured as Agrimec 0.15 EC Miticide/Insecticide", by MSD AGVET, a division of Merck & Co., Inc., on pears in Washington. No tolerances have been established for avermectin B_1 on any raw agricultural commodities.

Information in accordance with 40 CFR Part 166 was submitted as part of this request. The Applicant proposes ground applications applied at a rate of 10 to 20 ounces of product per acre per application. A maximum of two applications will be made per crop season. Applications would be made through August 1, 1988.

The Applicant indicates that with the recent withdrawal of cyhexatin growers are dependent on inferior products with demonstrated problems. Those products include fenbutatin-oxide, superior spray oil, oxamyl, formetanate, and propargite.

The Applicant indicates that without adequate control of the mites economic losses expected could total over $12.6 million.

This notice does not constitute a decision by EPA on the application itself. The regulations governing section 18 require that the Agency publish notice in the **Federal Register** and solicit public comment on an application involving the first food use of a pesticide. Accordingly, interested persons may submit written views on this subject to the Program Management and Support Division at the address above.

The Agency, accordingly, will review and consider all comments received during the comment period.

Dated: March 24, 1988.

Edwin F. Tinsworth,

Director, Registration Division, Office of Pesticide Programs.

[FR Doc. 88-7174 Filed 4-5-88; 8:45 am]

BILLING CODE 6560-50-M

[OPP-180772; FRL-3361-4]

Receipt of Application For Specific Exemption To Use Clofentezine; Solicitation of Public Comment

AGENCY: Environmental Protection Agency (EPA).

ACTION: Notice.

SUMMARY: EPA has received a specific exemption request from the West Virginia Department of Agriculture (hereafter referred to as "Applicant") for use of the unregistered active ingredient clofentezine (3,6-bis-(2-chlorophenyl)-1,2,4,5-tetrazine) to control European red mites on apples. In accordance with 40 CFR 166.24, EPA is soliciting comment before making the decision whether or not to grant this specific exemption request.

DATE: Comments must be received on or before April 21, 1988.

ADDRESS: Three copies of written comments, bearing the identifying notation "OPP-180772," should be submitted by mail to: Information Services Section, Program Management and Support Division (TS-757C), Office of Pesticide Programs, Environmental Protection Agency, 401 M St. SW., Washington, DC 20460.

In person, bring comments to: Rm. 246, CM #2, 1921 Jefferson Davis Highway, Arlington, VA.

Information submitted as a comment concerning this notice may be claimed confidential by marking any part or all of that information as "Confidential Business Information (CBI)." Information so marked will not be disclosed except in accordance with procedures set forth in 40 CFR Part 2. A copy of the comment that does not contain CBI must be submitted for inclusion in the public record. Information not marked confidential may be disclosed publicly by EPA without prior notice to the submitter. All written comments will be available for inspection in Rm. 246 at the address given above from 8 a.m. to 4 p.m., Monday through Friday excluding legal holidays.

FOR FURTHER INFORMATION CONTACT: By mail: Libby A. Pemberton, Registration Division (TS-767C), Office of Pesticide Programs, Environmental Protection Agency, 401 M St. SW., Washington, DC 20460.

Office location and telephone number: Rm. 716A, CM#2, 1921 Jefferson Davis Highway, Arlington, VA (703-557-1806).

SUPPLEMENTARY INFORMATION: Pursuant to section 18 of the Federal Insecticide, Fungicide, and Rodenticide Act (FIFRA) (7 U.S.C. 136p), the Administrator may, at his discretion, exempt a State agency from any registration provision of FIFRA if he determines that emergency conditions exist which require such exemption.

The Applicant has requested the Administrator to issue a specifc exemption to permit the use of the unregistered active ingredient, clofentezine, available as the pesticide product Apollo SC, manufactured by Nor-Am Chemical Company, to control European red mites on apples.

Information in accordance with 40 CFR Part 166 was submitted as part of this request.

The Applicant has requested authorization to make one complete or two "alternate row middle spray" applications with Apollo. A maximum of four ounces of formulated product (0.125 pound active ingredient) is proposed to be applied per acre by ground equipment as a dilute or concentrate spray. The time of treatment extends from "pink" until 45 days before harvest.

The Applicant proposes to treat a maximum of 14,000 acres of apples in Morgan, Hampshire, Berkely and Jefferson Counties. A maximum of 437.5 gallons of product would be needed under the proposed exemption.

The Applicant claims that European red mites have developed resistance to Plictran (cyhexatin) which historically (prior to its removal from the market in 1987) had been used for control of mites. Similar resistance also exists to the related organo-tin acaricide, Vendex (fenbutatin-oxide). Dicofol has also been used in the past, however, resistance appears to have developed to this pesticide as well. Other acaricides such as formetanate hydrochloride, oxamyl and propargite are not effective, toxic to beneficials or otherwise not appropriate for mite control at various times.

The Applicant states that the result of not having an effective control of the European red mite would be decreased fruit size, loss of fruit set and reduced fruit quality.

The Applicant estimates that losses of up to $1.7 million in gross revenues if Apollo is not available for use in the 1988 growing season.

This notice does not constitute a decision by EPA on the application itself. The regulations governing section 18 require that the Agency publish notice in the **Federal Register** and solicit public comment on applications involving an unregistered active ingredient. Accordingly, interested persons may submit written views on this subject to the Program Management and Support Division at the address above.

The Agency, accordingly, will review and consider all comments received during the comment period.

Dated: March 25, 1988.

Edwin F. Tinsworth,

Director, Registration Division, Office of Pesticide Programs.

[FR Doc. 88-7510 Filed 4-5-88; 8:45 am]

BILLING CODE 6660-50-M

[OPP-180773; FRL-3361-5]

Receipt of Applications for Specific Exemptions To Use Clofentezine and Hexythiazox; Solicitation of Public Comment

AGENCY: Environmental Protection Agency (EPA).

ACTION: Notice.

SUMMARY: EPA has received specific exemption requests from the New Jersey Department of Environmental Protection (hereafter referred to as "Applicant") for use of the unregistered active ingredients clofentezine (3,6-bis(2-chlorophenyl)-1,2,4,5-tetrazine) and hexythiazox (*N*-cyclohexyl-4-methyl-2-oxothiazolidine-3-carboxamide) to control European red mites on apples. In accordance with 40 CFR 166.24, EPA is soliciting comment before making the decision whether or not to grant these specific exemption requests.

DATE: Comments must be received on or before April 21, 1988.

ADDRESS: Three copies of written comments, bearing the identifying notation "OPP-180773," should be submitted by mail to:

Information Services Section, Program Management and Support Division (TS-757C), Office of Pesticide Programs, Environmental Protection Agency, 401 M Street SW., Washington, DC 20460

In person, bring comments to: Rm. 246, CM #2, 1921 Jefferson Davis Highway, Arlington, VA.

Information submitted as a comment concerning this notice may be claimed confidential by marking any part or all of that information as "Confidential Business Information (CBI)." Information so marked will not be disclosed except in accordance with procedures set forth in 40 CFR Part 2. A copy of the comment that does not contain CBI must be submitted for inclusion in the public record. Information not marked confidential may be disclosed publicly by EPA without prior notice to the submitter. All written comments will be available for inspection in Rm. 246 at the address given above from 8 a.m. to 4 p.m., Monday through Friday excluding legal holidays.

FOR FURTHER INFORMATION CONTACT:

By mail: Libby A. Pemberton, Registration Division (TS-767C), Office of Pesticide Programs, Environmental Protection Agency, 401 M Street SW., Washington, DC 20460

Office location and telephone number: Rm. 716A, CM #2, 1921 Jefferson Davis Highway, Arlington, VA, (703-557-1806).

SUPPLEMENTARY INFORMATION: Pursuant to section 18 of the Federal Insecticide, Fungicide, and Rodenticide Act (FIFRA) (7 U.S.C. 136p), the Administrator may, at his discretion, exempt a State agency from any registration provision of FIFRA if he determines that emergency conditions exist which require such exemption.

The Applicant has requested the Administrator to issue specific exemptions to permit the use of the unregistered active ingredients, clofentezine, available as the pesticide product Apollo SC, manufactured by Nor-Am Chemical Company, and hexythiazox, available as the pesticide product Savey WP, manufactured by E.I. du Pont de Nemours Chemical Company, to control European red mites on apples.

Information in accordance with 40 CFR Part 166 was submitted as part of these requests.

The Applicant has requested authorization to make one application with Apollo SC or Savey WP. A maximum of four ounces of formulated Apollo SC (0.125 pound active ingredient) or 3 ounces (0.094 pound active ingredient) of formulated Savey WP is proposed to be applied per acre by ground equipment as a dilute or concentrate spray. The time of treatment extends from "tight cluster" until 45 days before harvest for Apollo SC and until 28 days before harvest for Savey WP.

The Applicant proposes to treat a maximum of 6500 acres of apples. A maximum of 102 gallons of Apollo SC

and 610 pounds of Savey WP would be needed under the proposed exemptions.

Applications would be made May 1 through August 31, 1988.

The Applicant claims that European red mites have developed resistance to Plictran (cyhexatin) which historically (until it became unavailable in 1987) has been used for control of mites. Similar resistance also exists to the related organo-tin acaricide, Vendex (fenbutatin-oxide). Dicofol has also been used in the past, however, resistance appears to have developed to this pesticide as well. Other acaricides such as formetanate hydrochloride, oxamyl and propargite are not effective, toxic to beneficials or otherwise not appropriate for mite control at various times.

The Applicant indicates that by having both materials available, growers could alternate miticides and reduce the buildup of resistance in the European red mite population. The Applicant also indicates that there is a very limited quantity of Apollo SC available in this country for use during the 1988 season.

The Applicant estimates that losses of up to $716,297 in gross revenues for New Jersey apple growers will result in Apollo SC or Savey WP is not available for use in 1988.

This notice does not constitute a decision by EPA on the applications themselves. The regulations governing section 18 require that the Agency publish notice in the **Federal Register** and solicit public comment on applications involving an unregistered active ingredient. Accordingly, interested persons may submit written views on this subject to the Program Management and Support Division at the address above.

The Agency, accordingly, will review and consider all comments received during the comment period.

Dated: March 25, 1988.

Edwin F. Tinsworth,

Director, Registration Division, Office of Pesticide Programs.

[FR Doc. 88-7511 Filed 4-5-88; 8:45 am]

BILLING CODE 6560-50-M

[OPP-50677; FRL-3361-3]

Issuance of Experimental Use Permits: Ciba-Geigy Corp. et al.

AGENCY: Environmental Protection Agency (EPA).

ACTION: Notice.

SUMMARY: EPA has granted experimental use permits to the following applicants. These permits are in accordance with, and subject to, the provisions of 40 CFR Part 172, which defines EPA procedures with respect to the use of pesticides for experimental purposes.

FOR FURTHER INFORMATION CONTACT:

By mail: Registration Division (TS-767C), Office of Pesticide Programs, Environmental Protection Agency, 401 M St., SW., Washington, DC 20460.

In person or by telephone: Contact the product manager at the following address at the office location or telephone number cited in each experimental use permit: 1921 Jefferson Davis Highway, Arlington, VA.

SUPPLEMENTARY INFORMATION: EPA has issued the following experimental use permits:

100-EUP-91. Issuance. Ciba-Geigy Corporation, P.O. Box 18300, Greensboro, NC 27419. This experimental use permit allows the use of 3.6 pounds of herbicide methyl 2-[[[[[4,6-bis(difluoromethoxy)-2-pyrimidinyl]amino]carbonyl]amino]sulfonyl]benzoate on a total of 150 acres of corn to evaluate control of selective postemergence weed control. The program is authorized only in the States of Illinois, Kansas, Kentucky, Maryland, Missouri, Nebraska, Ohio, and Tennessee. The experimental use permit is effective from February 18, 1988 to February 18, 1989. This permit is issued with the limitation that all crops are destroyed or used for research purposes only. (Richard Mountford, PM 23, Rm. 237, CM#2, (703-557-1830))

38574-EUP-2. Issuance. New Mexico State University, Department of Entomology, Las Cruces, NM 88003. This experimental use permit allows the use of 94.37 pounds of the insecticide malathion on 3,999 acres of clover, rangeland, pasture and non-agricultural land to evaluate the control of grasshoppers. The program is authorized only in the States of Arizona, New Mexico, South Dakota, and Wyoming. The experimental use permit is effective from March 2, 1988 to March 2, 1989. Permanent tolerances for residues of the active ingredient in or on clover, grass, and grass hay have been established (40 CFR 180.111). (William Miller, PM 16, Rm. 211, CM#2, (703-557-2600))

34704-EUP-9. Issuance. Platte Chemical Company, P.O. Box 667, Greeley, CO 80632. This experimental use permit allows the use of 13,200 pounds of each of the nematicide/insecticide ethoprop and the insecticide phorate on a total of 4,400 acres of potatoes to evaluate the control of the Colorado pototo beetle, fleabeetles, green peach aphid, leafhopper, leafminer, nematodes, potato aphid, psyllid, and wireworms. The program is authorized only in the States of California, Colorado, Idaho, Maine, Michigan, Minnesota, New York, North Carolina, North Dakota, Oregon, Washington, and Wisconsin. The experimental use permit is effective from March 8, 1988 to March 8, 1989. A permanent tolerance for residues of each of the active ingredients phorate and ethoprop in or on potatoes has been established (40 CFR 180.206 and 40 CFR 180.262, respectively). (William Miller, PM 16, Rm. 211, CM#2, (703-557-2600))

Persons wishing to review these experimental use permits are referred to the designated product managers. Inquiries concerning these permits should be directed to the persons cited above. It is suggested that interested persons call before visiting the EPA office, so that the appropriate file may be made available for inspection purposes from 8 a.m. to 4 p.m., Monday through Friday, excluding legal holidays.

Authority: 7 U.S.C. 136c.

Dated: March 28, 1988.

Edwin F. Tinsworth,

Director, Registration Division, Office of Pesticide Programs.

[FR Doc. 88-7512 Filed 4-5-88; 8:45 am]

BILLING CODE 6560-50-M

[OPP-240080; FRL-3360-8]

State Registrations of Pesticides; Arizona et al.

AGENCY: Environmental Protection Agency (EPA).

ACTION: Notice.

SUMMARY: EPA has received notices of registration of pesticides to meet special local needs under section 24(c) of the Federal Insecticide, Fungicide, and Rodenticide Act (FIFRA), as amended, from 22 States. A registration issued under this section of FIFRA shall not be effective for more than 90 days if the Administrator disapproves the registration or finds it to be invalid within that period. If the Administrator disapproves a registration or finds it to be invalid after 90 days, a notice giving that information will be published in the **Federal Register.**

DATE: The last entry for each item is the date the State registration of that product became effective.

FOR FURTHER INFORMATION CONTACT:

Owen F. Beeder, Registration Division (TS-767C), Office of Pesticide Programs, Environmental Protection Agency, 401 M St., SW., Washington, DC.

Office location and telephone number: Rm. 716A, CM #2, 1921 Jefferson Davis Highway, Arlington, VA 22202, (703)-557-7893.

SUPPLEMENTARY INFORMATION: This notice only lists the section 24(c) applications submitted to the Agency. The Agency has 90 days to approve or disapprove each application listed in this notice. Applications that are not approved are returned to the appropriate State for action. Most of the registrations listed below were received by the EPA in January through February 1988. Receipts of State registrations will be published periodically. Of the following registrations, none involve a changed-use pattern (CUP). The term "changed-use pattern" is defined in 40 CFR 162.3(k) as a significant change from a use pattern approved in connection with the registration of a pesticide product. Examples of significant changes include, but are not limited to, changes from a nonfood to food use, outdoor to indoor use, ground to aerial application, terrestrial to aquatic use, and nondomestic to domestic use.

Arizona

EPA SLN No. AZ 87 0022. Stauffer Chemical Co. Registration is for Eptam R 7-E Selective Herbicide to be used on idle season fallow ground to control yellow and purple nutsedge. December 2, 1987.

EPA SLN No. AZ 87 0023. Gowan Co. Registration is for Gowan Azinphos-M 2 EC to be used on cotton to control boll weevils. January 8, 1987.

EPA SLN No. AZ 87 0024. E.I. du Pont de Nemours. Registration is for Du Pont Bladex 4L Herbicide to be used on cotton to control weeds. January 12, 1988.

EPA SLN No. AZ 87 0025. E.I. du Pont de Nemours. Registration is for Du Pont Bladex 90 DF Herbicide to be used on cotton to control weeds. January 12, 1988

EPA SLN No. AZ 88 0001. Rhone Poulenc Ag Co. Registration is for Rovral Fungicide to be used on crucifer crops grown for seed to control alternaria leaf and pod blight and sclerotinia white rot. January 18, 1988.

California

EPA SLN No. CA 88 0001. California Grape and Tree Fruit League. Registration is for Sinbar Herbicide to be used on nectarines to control marestail. January 4, 1988

EPA SLN No. CA 88 0002. Malcolm Ricci. Registration is for Treflan 5 to be used on daikon (Japanese radish) to control broadleaf and grassy weeds. January 5, 1988.

EPA SLN No. CA 88 0004. El Dorado County Dept. of Agriculture. Registration is for Pro-Gibb to be used on grapes (Chenin Blanc and Zinfandel varieties only) to control bunch rot on flower clusters. January 13, 1988.

Connecticut

EPA SLN No. CT 88 0001. Hopkins Agricultural Chemical Co. Registration is for Ramik Brown to be used on orchards to control orchard mice. January 13, 1988.

EPA SLN No. CT 88 0002. Chempar, A Divsion of Lipha Chemicals, Inc. Registration is for Rozol Paraffinized Pellets to be used on orchards to control orchard mice. February 11, 1988.

EPA SLN No. CT 88 0003. Chempar, A Division of Lipha Chemicals, Inc. Registration is for Rozol Ground Spray Concentrate to be used on apple orchards to control orchard mice. February 11, 1988.

Delaware

EPA SLN No. DE 88 0001. FMC Corp. Registration is for Talstar 10 WP to be used on ornamental trees, shrubs, plants, and flowers to control aphids, armyworms, and mites. January 24, 1988.

Florida

EPA SLN No. FL 88 0001. Florida Dept. of Agriculture. Registration is for Cythion/Malathion JLV Concentrate to be used on citrus groves and adjacent noncrop lands to control aphids and spider mites. January 21, 1988.

EPA SLN No. FL 88 0002. Coopers Animal Health, Inc. Registration is for Tomahawk™ Insecticide Ear Tags to be used on beef and nonlactating dairy cattle and calves to control horn flies. February 1, 1988.

EPA SLN No. FL 88 0003. Phone-Poulenc Ag Co. Registration is for Temik Brank 15 G Aldicarb Pesticide to be used on citrus to control citrus nematodes. February 8, 1988.

Georgia

EPA SLN No. GA 88 0001. Griffin Corp. Registration is for Manex 4L to be used on mustard greens, turnip greens, collards, and kale to control alternaria leafspot and downy mildew. February 12, 1988.

Hawaii

EPA SLN No. HI 88 0002. Hawaii Anthurium Industry Association. Registration is for Physan 20 to be used on anthuriums to control borrowing nematodes. January 14, 1988.

Illinois

EPA SLN No. IL 88 0001. Clarke Outdoor Spraying Co., Inc., Reistration is for Temephos to be used on tire piles to control *aedes alboplctus* mosquito larvae. January 22, 1988.

Iowa

EPA SLN No. IA 88 0001. Coopers Animal Health, Inc. Registration is for Tomahawk™ Insecticide Ear Tags to be used on beef and nonlactating dairy cattle to control horn flies. February 15, 1988.

Louisiana

EPA SLN No. LA 87 0012. Mobay corp. Registration is for Monitor 4 to be used on cotton to control aphids, thrips, whiteflies, and mites. November 16, 1988.

EPA SLN No. LA 88 0001. E.I. du Pont de Nemours & Co., Inc. Registration is for Du Pont Bidrin 8 Water Miscible Insecticide to be used on pecan trees to control aphids. January 28, 1988.

Mississippi

EPA SLN No. MS 88 0001. Hoechst-Roussel Agri-Vet Co. Registration is for Whip 1EC Herbicide to be used on rice and soybeans for postemergence, annual, and perennial control of grass. February 23, 1988.

Missouri

EPA SLN No. MO 88 0001. FMC Corp. Registration is for Command 4 EC Herbicide to be used preemergence on soybeans to control various weeds. January 28, 1988.

Montana

EPA SLN No. MT 88 0001. Coopers Animal Health, Inc. Registration is for Tomahawk™ Insecticide Ear Tags to be used on beef and nonlactating dairy cattle to control horn flies. January 15, 1988.

Nevada

EPA SLN No. NV 87 0003. Wilcon Distributors, Inc. Registration is for Wilcon Gopher Getter Bait Type 2 to be used on range and pasture land to control gophers. December 3, 1987.

North Carolina

EPA SLN No. NC 87 0006. Chevron Chemcal Co. Registration is for Orthene 75S Soluble Powder to be used on southern pine seed orchards to control slash pine flower thrips, coneworms, coneborers, and seedbugs. November 30, 1987.

Ohio

EPA SLN No. OH 88 0001. Rohm and Haas Co. Registration is for Kerb 50W Herbicide to be used on preemergence application to seeded lettuce to control weeds. January 29, 1988.

Oklahoma

EPA SLN No. OK 88 0001. USDA-APHIS-ADC. Registration is for 2% Zinc Phosphide to be used on phosphide-treated oats to control black-tailed prairie dogs. February 1, 1988.

South Dakota

EPA SLN No. SD 87 0008. Dow Chemical Co. Registration is for Tordon 22K Weed Killer to be used on noncropland areas and fence rose and around farm buildings and roadsides to control various weeds. December 18, 1987.

Tennessee

EPA SLN No. TN 88 0001. Chevron Chemical Co. Registration is for Orthocide 50 Wettable to be used post planting on pine seedlings to control damping off and root rot. February 2, 1988.

EPA SLN No. TN 88 0002. Dow Chemcial U.S.A. Registration is for Lorsban 4E Insecticide to be used on grapes to control grape root borers. February 23, 1988.

Washington

EPA SLN No. WA 88 0001. Great Lakes Chemical Co. Registration is for Chlor-O-Pic to be used on Douglas Fir stumps to control inoculum of laminated root rot. January 11, 1988.

West Virginia

EPA SLN No. WV 88 0001. Fermenta Animal Health Co. Registration is for Terminator Insecticide Cattle Ear Tag to be used on beef and nonlactating dairy cattle to control horn flies and face flies. January 28, 1988.

Wyoming

EPA SLN No. WY 88 0001. American Cyanamide Co. Registration is for Thimet 20-G Soil and Systemic Insecticide to be used on barley to control Russian wheat aphids and other aphids. February 22, 1988.

(Sec. 24, as amended, 92 Stat. 835 (7 U.S.C. 136))

Dated: March 25, 1988.

Douglas D. Campt,

Director, Office of Pesticide Programs.

[FR Doc. 88-7513 Filed 4-5-88; 8:45 am]

BILLING CODE 6560-50-M

[PP 6G3320/T557; FRL-3361-1]

Avermectin; Renewal of Temporary Tolerance

AGENCY: Environmental Protection Agency (EPA).

ACTION: Notice.

SUMMARY: EPA has renewed a temporary tolerance for residues of the miticide avermectin and its delta 8,9-geometric isomer in or on the raw agricultural commodity cottonseed.

DATE: This temporary tolerance expires January 21, 1989.

FOR FURTHER INFORMATION CONTACT: By mail:

George LaRocca, Product Manager (PM) 15, Registration Division (TS-767C), Office of Pesticide Programs, Environmental Protection Agency 401 M St., SW., Washington, DC 20460

Office location and telephone number: Rm. 204, CM#2, 1921 Jefferson Davis Highway, Arlington, VA, (703) 557-2400.

SUPPLEMENTARY INFORMATION: EPA issued a notice which was published in the **Federal Register** of January 21, 1987 (52 FR 2282), stating that a temporary tolerance had been established for residues of the miticide avermectin and its delta 8,9-geometric isomer in or on the raw agricultural commodity cottonseed at 0.005 part per million (ppm).

This tolerance was renewed in response to pesticide petition (PP) 6G3320, submitted by Merck Sharp and Dohme Research Laboratory, Division of Merck and Co., Inc., Hillsborough Rd., Three Bridges, NJ 08887.

The company has requested a 1-year renewal of the temporary tolerance to permit the continued marketing of the above raw agricultural commodity when treated in accordance with the provisions of experimental use permit 50658-EUP-2, which is being renewed under the Federal Insecticide, Fungicide, and Rodenticide Act (FIFRA) as amended (Pub. L. 95-396, 92 stat. 819; 7 U.S.C. 136).

The scientific data reported and other relevant material were evaluated, and it was determined that a renewal of the temporary tolerance will protect the public health. Therefore, the temporary tolerance has been renewed on the condition that the pesticide be used in accordance with the experimental use permit and with the following provisions:

1. The total amount of the active ingredient to be used must not exceed the quantity authorized by the experimental use permit.

2. Merck Sharp and Dohme Research Lab. must immediately notify the EPA of any findings from the experimental use that have a bearing on safety. The company must also keep records of production, distribution, and performance, and on request make the records available to any authorized officer or employee of the EPA or the Food and Drug Administration.

This tolerance expires January 21, 1987. Residues not in excess of this amount remaining in or on the above raw agricultural commodity after this expiration date will not be considered actionable if the pesticide is legally applied during the term of, and in accordance with, the provisions of the experimental use permit and temporary tolerance. This tolerance may be revoked if the experimental use permit is revoked or if any experience with or scientific data on this pesticide indicate that such revocation is necessary to protect the public health.

The Office of Management and Budget has exempted this notice from the requirements of section 3 of Executive Order 12291.

Pursuant to the requirements of the Regulatory Flexibility Act (Pub. L. 96-354, 94 Stat. 1164, 5 U.S.C. 601-612), the Administrator has determined that regulations establishing new tolerances or raising tolerance levels or establishing exemptions from tolerance requirements do not have a significant economic impact on a substantial number of small entities. A certification statement to this effect was published in the **Federal Register** of May 4, 1981 (46 FR 24950).

Authority: 21 U.S.C. 346a(j).

Dated: March 24, 1988.

Edwin F. Tinsworth,

Director, Registration Division, Office of Pesticide Programs.

[FR Doc. 88-7514 Filed 4-5-88; 8:45 am]

BILLING CODE 6560-50-M

[OPTS-42071A; FRL-3361-8]

Testing Consent Agreement; Development for Octamethylcyclotetrasiloxane (OMCTS); Solicitation for Interested Parties

AGENCY: Environmental Protection Agency (EPA).

ACTION: Notice.

SUMMARY: EPA's procedures for requiring the testing of chemical substances and mixtures under section 4 of the Toxic Substances Control Act (TSCA) include the adoption of testing consent orders and the promulgation of test rules. Consent orders may be adopted where consensus on an industry test program is reached in a timely manner by EPA, affected manufactures and/or processors and other interested parties. If timely consensus cannot be reached or appears

unlikely, and the Agency makes certain statutory findings under TSCA, EPA issues test rules. This notice announces EPA's decision to consider negotiating a consent order for environmental effects and chemical fate testing of octamethylcyclotetrasiloxane (OMCTS; CAS No. 556-67-2), announces a public meeting to discuss such testing, and requests all persons desiring to have the status of "interested parties" in negotiation of a consent order for IMCTS to notify EPA of their interest.

DATES: Submit written notice of interest to be designated an "interested party" on or before April 28, 1988. A public meeting will be held on April 20, 1988 at 1:00 in Room NE-103, 401 M St., SW., Washington, DC.

ADDRESS: Submit written request to be an "interested party" in triplicate, identified by the document control number (OPTS-42071A) to: TSCA Public Docket Office (TS-793), Office of Pesticides and Toxic Substances, Environmental Protection Agency, Rm. NE-G004, 401 M St., SW., Washington, DC 20460.

FOR FURTHER INFORMATION CONTACT: Michael, M. Stahl, Acting Director, TSCA Assistance Office (TS-799), Office of Toxic Substances, Rm, E-543, 401 M St., SW., Washington, DC 20460, (202) 554-1404. Persons interested in attending the public meeting should notify EPA by telephone on or before April 20, 1988

SUPPLEMENTARY INFORMATION: EPA published a proposed test rule requiring environmental effects and chemical fate testing of OMCTS in the **Federal Register** of October 30, 1985 (50 FR 45123). Since that time, EPA has issued amendments to the procedural regulation in 40 CFR Part 790, which govern the development and implementation of testing requirements under section 4 of TSCA. These amendments establish procedures for using testing consent orders to develop testing requirements under section 4 of the Act

Representatives of manufacturers have proposed performing most of the testing included in the proposed rule under a testing consent order with EPA. EPA has agreed to consider negotiating a consent order that would include appropriate testing of OMCTS. This notice serves three purpopses. First, it requires "interested parties" who wish to participate in testing negotiations for OMCTS to identify themselves to EPA. Second, it announces a public meeting to initiate testing negotiations for this chemical. Third, it proposes a target schedule for the development of a consent order.

I. Identification of Interested Parties

Under 40 CFR 790.22, the testing negotiation procedures are initiated by the publication of a **Federal Register** notice which invites persons interested in participating in or monitoring negotiations for the development of a testing consent order to notify the Agency in writing. Those individuals and groups who respond to EPA's notice by the deadline established in the notice will have the status of "interested parties" and will be afforded opportunities to participate in the negotiations process. These "interested parties" will not incur any obligations by being designated "interested parties". The procedures for these negotiations are described in 40 CFR 790.22. Individuals and groups desiring to have the status of "interested parties" in the development of the consent order for OMCTS should submit a written request to the Agency at the address given above on or before April 28, 1988.

II. Public Meeting

A public meeting will be held at 1:00 on April 20, 1988, in Rm. 103, Northeast Mall, EPA Headquarters, 401 M St., SW., Washington, DC to announce EPA's determination of testing needs for OMCTS and to initiate testing negotiations. Persons interested in attending this meeting should notify the EPA TSCA Assistance Office by telephone at the number listed above on or before April 18, 1988.

III. Timetable for Negotiating Test Agreement

In accordance with the procedures for the development of consent orders established in 40 CFR 790.22, and the Agency's plans to propose a test rule for OMCTS by September 30, 1988 (if a consent order cannot be developed in that time), the following target schedule is established for OMCTS:

April 20, 1988—Public meeting to initiate testing negotiations.

April 28, 1988—Deadline for notice of interested party designations.

May 26, 1988—Decision by EPA on whether to use consent order or test rule.

June 23, 1988—Draft consent order sent to interested parties (if EPA decides to use consent order).

September 15, 1988—Issuance of consent order to industry for signatures.

Authority: 15 U.S.C. 2603.

Dated: March 28, 1988.

J. Merenda,

Director, Existing Chemical Assessment Division.

[FR Doc. 88-7637 Filed 4-5-88; 8:45 am]

BILLING CODE 6560-50-M

FEDERAL COMMUNICATIONS COMMISSION

Public Information Collection Requirement Submitted to Office of Management and Budget for Review

March 25, 1988.

The Federal Communications Commission has submitted the following information collection requirement to OMB for review and clearance under the Paperwork Reduction Act of 1980 (44 U.S.C. 3507).

Copies of this submission may be purchased from the Commission's copy contractor, International Transcription Service, (202) 857-3800, 2100 M Street NW., Suite 140, Washington, DC 20037. For further information on this submission contact Terry Johnson, Federal Communications Commission, (202) 632-7513. Persons wishing to comment on this information collection should contact J. Timothy Sprehe, Office of Management and Budget, Room 3235 NEOB, Washington, DC 20503, (202) 395-4814.

OMB Number: None.

Title: Sections 63.801 and 43.81, Regulatory Policies and International Telecommunications.

Action: New collection.

Respondents: Businesses or other for-profit.

Frequency of Response: Quarterly and annually.

Estimated Annual Burden: 68 Responses, 3,400 Hours.

Needs and Uses: Interexchange carriers having more than $100 million in total regulated revenues and Tier 1 local exchange carriers, their holding companies and affiliates are required to file an annual procurement report concerning their purchase of core equipment for the preceding year. Foreign-owned carriers operating domestic long distance services are required to file quarterly revenue and traffic reports on all common carrier services offered within the U.S. The information will be used by the FCC to assess the nature and extent of foreign participation in the core equipment and interexchange services market in the U.S.

Federal Communications Commission.

H. Walker Feaster III,

Acting Secretary.

[FR Doc. 88-7452 Filed 4-5-88; 8:45 am]

BILLING CODE 6712-01-M

[Report No. 1718]

Petitions for Reconsideration of Actions in Rule Making Proceedings

March 28, 1988.

Petitions for reconsideration have been filed in the Commission rule making proceeding listed in this Public Notice and published pursuant to 47 CFR 1.429(e). The full text of these documents are available for viewing and copying in Room 239, 1919 M Street NW., Washington, DC, or may be purchased from the Commission's copy contractor, International Transcription Service (202-857-3800). Opposition to these petitions must be filed on or before April 22, 1988. See § 1.4(b)(1) of the Commission's rules (47 CFR 1.4(b)(1)). Replies to an opposition must be filed with in 10 days after the time for filing oppositions has expired.

Subject: Amendment of § 73.202(b), Table of Allotments, FM Broadcast Stations. (Keokuk, Iowa) MM Docket No. 86-416, RM-5112)

Number of petitions received: 1.

Subject: Amendment of § 73.202(b), Table of Allotments, FM Broadcast Stations. (Glenwood Springs, Colorado) (MM Docket No. 87-174, RM-5465).

Number of petitions received: 1.

Federal Communications Commission.

H. Walker Feaster III,

Acting Secretary.

[FR Doc. 88-7453 Filed 4-5-88;8:45am]

BILLING CODE 6712-01-M

FEDERAL HOME LOAN BANK BOARD

[No. AC-706]

Bankers Federal Savings, FSB, New York, NY; Final Action; Approval of Conversion Application

Date: March 31, 1988.

Notice is hereby given that on March 24, 1988, the Office of General Counsel of the Federal Home Loan Bank Board, acting pursuant to the authority delegated to the General Counsel or his designee, approved the application of Bankers Federal Savings, FSB, New York, New York for permission to convert to the stock form of organization. Copies of the application are available for inspection at the Office of the Secretariat at the Federal Home Loan Bank Board, 1700 G Street, NW., Washington, DC 20552, and at the Office of the Supervisory Agent at the Federal Home Loan Bank of New York, One World Trade Center, Floor 103, New York, New York 10048.

By the Federal Home Loan Bank Board.

John F. Ghizzoni,

Assistant Secretary.

[FR Doc. 88-7517 Filed 4-5-88; 8:45 am]

BILLING CODE 6720-01-M

[No. AC-705; FHLBB Nos. 0010 and 2882]

Safety Federal Savings and Loan Association of Kansas City, Kansas City, MO and Home Savings Association of Kansas City, F.A., Kansas City, MO; Final Action; Approval of Conversion Application

Date: March 29, 1988.

Notice is hereby given that on March 29, 1988, the Federal Home Loan Bank Board, as operating head of the Federal Savings and Loan Insurance Corporation, pursuant to section 5(i) of the Home Owner's Loan Act of 1933, as amended, approved the application of Safety Federal Savings and Loan Association of Kansas City, Kansas City, Missouri ("Safety") and Home Savings Association of Kansas City, F.A., Kansas City, Missouri ("Home"), for permission to convert Safety to the stock form of organization by merging the Association into Home. Copies of the application are available for inspection at the Office of the Secretariat at the Federal Home Loan Bank Board, 1700 G Street, NW., Washington, DC 20552, and at the Office of the Supervisory Agent at the Federal Home Loan Bank of Des Moines, 907 Walnut Street, Des Moines, Iowa 50309.

By the Federal Home Loan Bank Board.

John F. Ghizzoni,

Assistant Secretary.

[FR Doc. 88-7518 Filed 4-5-88; 8:45 am]

BILLING CODE 6720-01-M

FEDERAL RESERVE SYSTEM

Compagnie Financiere De Suez, et al.; Applications To Engage de Novo in Permissible Nonbanking Activities

The companies listed in this notice have filed an application under § 225.23(a)(1) of the Board's Regulation Y (12 CFR 225.23(a)(1)) for the Board's approval under section 4(c)(8) of the Bank Holding Company Act (12 U.S.C. 1843(c)(8)) and § 225.21(a) of Regulation Y (12 CFR 225.21(a)) to commence or to engage *de novo*, either directly or through a subsidiary, in a nonbanking activity that is listed in 225.25 of Regulation Y as closely related to banking and permissible for bank holding companies. Unless otherwise noted, such activities will be conducted throughout the United States.

Each application is available for immediate inspection at the Federal Reserve Bank indicated. Once the application has been accepted for processing, it will also be available for inspection at the offices of the Board of Governors. Interested persons may express their views in writing on the question whether consummation of the proposal can "reasonable be expected to produce benefits to the public, such as greater convenience, increased competition, or gains in efficiency, that outweigh possible adverse effects, such as undue concentration of resources, decreased or unfair competition, conflicts of interests, or unsound banking practices." Any request for a hearing on this question must be accompanied by a statement of the reasons a written presentation would not suffice in lieu of a hearing, identifying specifically any questions of fact that are in dispute, summarizing the evidence that would be presented at a hearing, and indicating how the party commenting would be aggrieved by approval of the proposal.

Unless otherwise noted, comments regarding the applications must be received at the Reserve Bank indicated or the offices of the Board of Governors not later than April 25, 1988.

A. Federal Reserve Bank of New York (William L. Rutledge, Vice President) 33, Liberty Street, New York, New York 10045:

1. *Compagnie Financiere de Suez* and *Banque Indosuez,* both of Paris, France; to engage *de novo* through their subsidiary Indosuez Advisory Services, Inc., in serving as the advisory company for a mortgage or real estate trust and providing portfolio investment advice to other persons, to the extent such activities are permissible nonbanking activities under the provisions under 225.25(b)(4) of the Board's Regulation Y.

B. Federal Reserve Bank of Richmond (Lloyd W. Bostian, Jr., Vice President) 701 East Byrd Street, Richmond, Virginia 23261:

1. *Highlands Bankshares, Inc.,* Petersburg, West Virginia; to engage *en novo* through its subsidiary HBI Life Insurance Company, Phoenix, Arizona, in underwriting credit life and accident and health insurance for all locations of all bank held by the holding company, pursuant to § 225.25(b)(8) of the Board's Regulation Y.

C. Federal Reserve Bank of Atlanta (Robert E. Heck, Vice President) 104 Marietta Street, NW., Atlanta, Georgia 30303:

1. *The Colonial BancGroup, Inc.*, Montgomery, Alabama; to engage *de novo* in performing appraisals of real estate and tangible and intangible personal property, including securities, pursuant to § 225.25(b)(13) of the Board's Regulation Y.

D. Federal Reserve Bank of St Louis (Randall C. Sumner, Vice President) 411 Locust Street, St. Louis, Missouri 63166:

1. *Liberty Financial Services, Inc.* ("Company), Louisville, Kentucky; to engage *de novo* in (1) making, acquiring, or servicing loans and other extensions of credit for Company's account and for the account of others, pursuant to § 225.25(b)(1) of the Board's Regulation Y; and (2) operating an industrial loan company under Tennessee State law, pursuant to § 225.25(b)(2) of the Board's Regulation Y.

E. Federal Reserve Bank of San Francisco (Harry W. Green, Vice President) 101 Market Street, San Francisco, California 94105:

1. *Banque National de Paris*, Paris, France; to enagage *de novo* through its subsidiary BNP Leasing Corporation, Dallas Texas; in making, acquiring or servicing loans or other extensions of credit (including issuing letters of credit and accepting drafts) for the company's account or for the account of others, such as would be made by a commercial finance or factoring company § 225.25(b)(1)) and leasing personal property or acting as agent, broker or adviser in leasing such property, provided that all such leasing shall company with § 225.25(b)(5) of the Board's Regulation Y.

Board of Governors of the Federal Reserve System, March 31, 1988.

James McAfee,

Associate Secretary of the Board.

[FR Doc. 88-7455 Filed 4-5-88; 8:45 am]

BILLING CODE 6210-01-M

Change in Bank Control; Acquisitions of Shares of Banks or Bank Holding Companies; Bruce G. Lifton, et al.

The notificants listed below have applied under the Change in Bank Control Act (12 U.S.C. 1817(jj)) and § 225.41 of the Board's Regulation Y (12 CFR 225.41) to acquire a bank or bank holding company. The factors that are considered in acting on the notices are set forth in paragraph 7 of the Act (12 U.S.C. 1817(j)(7)).

The notices are available for immediate inspection at the Federal Reserve Bank indicated. Once the notices have been accepted for processing, they will also be available for inspection at the offices of the Board of Governors. Interested persons may express their views in writting to the Reserve Bank indicated for that notice or to the offices of the Board of Governors. Comments must be received not later than April 29, 1988.

A. Federal Reserve Bank of New York (William L. Rutledge, Vice President) 33 Liberty Street, New York, New York 10045:

1. *Bruce G. Lifton*, East Hills, New York; to acquire 24.38 percent of the voting shares of Great Neck Bancorp, Great Neck, New York, thereby indirectly acquire Bank of Great Neck, Great Neck, New York.

2. *Elinor Lifton*, East Hills, New York; to acquire 24.38 percent of the voting shares of Great Neck Bancorp, Great Neck, New York, thereby indirectly acquire Bank of Great Neck, Great Neck, New York.

3. *Judie B. Lifton, West Hills, New York; to acquire 24.38 percent of the voting shares of Great Neck Bancorp, Great Neck, New York, thereby indirectly acquire Bank of Great Neck, Great Neck, New York.*

4. *Martin Lifton*, East Hills, New York; to acquire 24.38 percent of the voting shares of Great Neck Bancorp, Great Neck, New York, thereby indirectly acquire Bank of Great Neck, Great Neck, New York.

5. *Steven J. Lifton*, East Hills, New York; to acquire 24.38 percent of the voting shares of Great Neck Bancorp, Great Neck, New York, thereby indirectly acquire Bank of Great Neck, Greant Neck, New York.

B. Federal Reserve Bank of Kansas City (Thomas M. Hoenig, Vice President) 925 Grand Avenue, Kansas City, Missouri 64198:

1. *Charles Travis Henderson*, Oklahoma City, Oklahoma; to acuire an additional 95.65 percent of the voting shares of Allied Oklahoma Boncorporation, Inc., Oklahoma City, Oklahoma, thereby indirectly acquire Allied Oklahoma Bank, N.A. Oklahoma City, Oklahoma.

2. *Dennis J. O'Neal* Holyoke, Colorado; to acquire an additional 2.34 percent of the voting shares of Holyoke Bancorp, Inc., Holyoke, Colorado, thereby indirectly acquire Security National Bank, Holyoke, Colorado.

3. *Thomas Derald Sweneford*, Gunnison, Colorado; to acquire 18.6 percent of the voting shares of Gunnison Bank Holding Corporation, Gunnison, Colorado, thereby indirectly acquire Gunnison Bank and Trust Company, Gunnison, Colorado.

4. *Peter D. Van Dorn*, Broomfield, Colorado; to acquire 18.6 percent of the voting shares of Gunnison Bank Holding Corporation, Gunnison, Colorado, thereby indirectly acquire Gunnison Bank and Trust Company, Gunnison, Colorado.

5. *Travis L. Waller*, Pueblo West, Colorado; to acquire an additional 19.19 percent of the voting shares of Bank of Southern Colorado, Pueblo West, Colorado (a state member bank).

C. Federal Reserve Bank of Minneapolis (James M. Lyon, Vice President) 250 Marguete Avenue, Minneapolis, Minnesota 55480:

1. *Laurel Fait*, Sioux Falls, South Dakota; to retain 47 percent of the Investment Corporation of America, Sioux Falls, South Dakota, thereby indirectly retain The Peoples Bank, Conde, South Dakota.

Board of Governors of the Federal Reserve System, March 31, 1988.

James McAfee,

Associate Secretary of the Board.

[FR Doc. 88-7456 Filed 4-5-88; 8:45 am]

BILLING CODE 6210-01-M

Newmil Bancorp, Inc., et al.; Formations of; Acquisitions by; and Mergers of Bank Holding Companies

The companies listed in this notice have applied for the Board's approval under section 3 of the Bank Holding Company Act (12 U.S.C. 1842) and § 225.14 of the Board's Regulation Y (12 CFR 225.14) to become a bank holding company or to acquire a bank or bank holding company. The factors that are considered in acting on the applications are set forth in section 3(c) of the Act (12 U.S.C. 1842(c)).

Each application is available for immediate inspection at the Federal Reserve Bank indicated. Once the application has been accepted for processing, it will also be available for inspection at the offices of the Board of Governors. Interested persons may express their views in writing to the Reserve Bank or to the offices of the Board of Governors. Any comment on an application that requests a hearing must include a statement of why a written presentation would not suffice in lieu of a hearing, indentifying specifically any questions of fact that are in dispute and summarizing the evidence that would be presented at a hearing.

Unless otherwise noted, comments regarding each of these applications must be received not later than April 28, 1988.

A. Federal Reserve Bank of Boston (Robert M. Brady, Vice President) 600 Atlantic Avenue, Boston, Massachusetts 02106:

1. *NewMil Bancorp, Inc.*, New Milford, Connecticut; to acquire 6.97 percent of

the voting shares of Cenvest, Inc., Meriden, Connecticut, thereby indirectly acquire Central Bank, Meriden, Connecticut.

2. *NewMil Bancorp, Inc.*, New Milford, Connecticut; to acquire 7.68 percent of the voting shares of West Mass Bankshares, Greenfield, Massachusetts, thereby indirectly acquire United Savings Bank, Conway, Massachusetts.

B. Federal Reserve Bank of New York (William L. Rutledge, Vice President) 33 Liberty Street, New York, New York 10045:

1. *North Fork Bancorporation, Inc.*, Mattituck, New York, to acquire 100 percent of the voting shares of Southold Savings Bank, Southold, New York. Bank operates an insurance agency subsidiary and a savings bank life insurance department.

C. Federal Reserve Bank of Philadelphia (Thomas K. Desch, Vice President) 100 North 6th Street, Philadelphia, Pennsylvania 10105:

1. *UNB Corporation*, Mount Carmel, Pennsylvania; to become a bank holding company by acquiring 100 percent of the Voting shares of the Union National Bank of Mount Carmel, Mount Carmel, Pennsylvania.

D. Federal Reserve Bank of St. Louis (Randall C. Sumner, Vice President) 411 Locust Street, St. Louis, Missouri 63166:

1. *DSB Bancshares, Inc.*, Dermott, Arkansas; to become a bank holding company by acquiring at least 80 percent of the voting shares of Dermott State Bank, Dermott, Arkansas.

E. Federal Reserve Bank of Dallas (W. Arthur Tribble, Vice President) 400 South Akard Street, Dallas, Texas 75222:

1. *First Parker Bancshares, Inc.*, Weatherford, Texas; to become a bank holding company by acquiring 99.85 percent of the voting shares of Weatherford Bancshares, Inc., Weatherford, Texas, thereby indirectly acquire The First National Bank of Weatherford, Weatherford, Texas.

2. *First Jacksboro Banchares of Delaware, Inc.*, Wilmington, Delaware; to become a bank holding company by acquiring 99.80 percent of the voting shares of the First National Bank of Jacksboro, Jacksboro, Texas.

3. *First Weatherford Bancshares, Inc.*, Weatherford, Texas; to become a bank holding company by acquiring 99.30 percent of the voting shares of the First National Bank of Weatherford, Weatherford, Texas.

F. Federal Reserve Bank of San Francisco (Harry W. Green, Vice President) 101 Market Street, San Francisco, California 94105:

1. *U.S. Bancorp*, Portland, Oregon, to acquire 100 percent of the voting shares of Mt. Baker Bank, A Savings Bank, Bellingham, Washington.

Board of Governors of the Federal Reserve System, March 31, 1988.

James McAfee,

Associate Secretary of the Board.

[FR Doc. 88-7457 Filed 4-5-88; 8:45 am]

BILLING CODE 6210-01-M

Norwest Corporation; Acquisition of Company Engaged in Permissible Nonbanking Activities

The organization listed in this notice has applied under § 225.23(a)(2) or (f) of the Board's Regulation Y (12 CFR 225.23(a)(2) or (f)) for the Board's approval under section 4(c)(8) of the Bank Holding Company Act (12 U.S.C 1843(c)(8)) and section 225.21(a) of Regulation Y (12 CFR 225.21(a)) to acquire or control voting securities or assets of a company engaged in a nonbanking activity that is listed in § 225.25 of Reguation Y as closely related to banking and permissible for bank holding companies. Unless otherwise noted, such activities will be conducted throughout the United States.

The application is available for immediate inspection at the Federal Reserve Bank indicated. Once the application has been accepted for processing, it will also be available for inspection at the offices of the Board of Governors. Interested persons may express their views in writing on the question whether consummation of the proposal can "reasonably be expected to produce benefits to the public, such as greater convenience, increased competition, or gains in efficiency, that outweigh possible adverse effects, such as undue concentration of resources, decreased or unfair competition, conflicts of interests, or unsound banking practices." Any request for a hearing on this question must be accompanied by a statement of the reasons a written presentation would not suffice in lieu of a hearing, identifying specifically any questions of fact that are in dispute, summarizing the evidence that would be presented at a hearing, and indicating how the party commenting would be aggrieved by approval of the proposal.

Comments regarding the application must be received at the Reserve Bank indicated or the offices of the Board of Governors not later than April 21, 1988.

A. Federal Reserve Bank of Minneapolis (James M. Lyon, Vice President) 250 Marquette Avenue, Minneapolis, Minnesota 55480:

1. *Norwest Corporation*, Minneapolis, Minnesota; to acquire through its wholly-owned subsidiary, Norwest Mortgage, Inc., certain assets, including eleven residential mortgage loan origination offices located in Ohio, of Magnet Mortgages, Inc., a corporation engaged in the general mortgage banking business. Upon consummation of this transaction, Norwest Mortgage, Inc. will engage in general mortgage banking activities and in the underwriting and dealing in bank-eligible securities pursuant to §§ 225.25(b)(1) and 225.25(b)(16) of the Board's Regulation Y.

Board of Governors of the Federal Reserve System, March 31, 1988.

James McAfee,

Associate Secretary of the Board.

[FR Doc. 88-7458 Filed 4-5-88; 8:45 am]

BILLING CODE 6210-01-M

DEPARTMENT OF HEALTH AND HUMAN SERVICES

Health Resources and Services Administration

Public Health Service; Availability of Funds for Community and Migrant Health Centers Activities Including Special Infant Mortality Reduction Program

AGENCY: Health Resources and Services Administration, HHS.

ACTION: Notice.

SUMMARY: The Health Resources and Services Administration (HRSA) is announcing, for Fiscal Year (FY) 1988: (1) The availability of approximately $383 million for community health center (CHC) activities and approximately $43.5 million for migrant health center (MHC) activities funded under sections 330 and 329 of the Public Health Service Act (42 U.S.C. 254c and 254b, respectively) for current service capacity; (2) the availability of approximately $19M for CHCs and $1M for MHCs to undertake new activities designed to reduce infant mortality; and (3) the criteria that will be used in evaluating applications for FY 1988 funding. Within the aforementioned section 330 current service capacity funding, the following will occur: (1) Funds will be provided to maintain or expand the provision of essential services by existing grantees that are performing according to program requirements; (2) Approximately $3 million will be provided to award grants to provide technical and other non-financial assistance under section 330(f)(1) of the Act; (3) Approximately $1.8 million will be provided to support

substance abuse activities and linkages for the provision of substance abuse prevention, treatment, referral and/or followup; and (4) Limited funds will be provided to expand the range of services at existing access points.

DATE: Applications for funds to maintain the provision of essential services by existing grantees are generally due 120 days prior to the expiration of the current grant award. Proposals for the infantry mortality reduction funds must be received no later than June 1, 1988.

FOR FURTHER INFORMATION CONTACT: Application kits for and additional information on current services grant funds and deadline dates may be obtained from, and completed applications should be sent to, the appropriate Regional Health Administrator (see Appendix). For general information about the availability of funds and information on funding for infant mortality reduction activities, contact Richard C. Bohrer, (301) 443-2260.

SUPPLEMENTARY INFORMATION:

Criteria for Evaluating Competing and Noncompeting C/MHC Applications

As is the practice every year, when determining whether Federal support will be made available, the Department will review C/MHCs for compliance with standard criteria stipulated in the regulations (42 CFR Part 51c for CHC and Part 56 for MHC Activities) and, if applicable, their use of previously awarded sections 330 and 329 funds. This year's reviews again will emphasize community need, clinical, governance, and financial/administrative expectations as set out below:

(a) Community Need (42 CFR 51c.104(b), 51c.305(b) and 56.104(b))

Because of limited grant funds, it is particularly important that C/MHCs assess the current needs of their service populations. Grant applicants must include the results of an assessment of the need for their services. This assessment must take into account the health status and demograhic characteristics of the population to be served and identify the extent to which the center is currently providing care to the needy population in its service area. In order to make relative need determinations, the Department will consider the results of the assessment along with other relevant factors. In addition, the applications must include a description of the needs of special population groups for whom the centers are the primary care providers, such as the homeless, AIDS patients, and substance abusers. Specific mention should be made of how their care has been integrated into the centers' overall health care plans.

(b) Clinical (42 CFR 51c.102(c)(1)(i), 51c.303(a) and (p), 56.303(a) and (p), 56.603(a) and (n), and 56.102(g)(1)(i))

C/MHCs must provide high quality primary health care services to medically disadvantaged and underserved populations in their communities recognizing that people progress through five stages of life: Prenatal, pediatric, adolescent, adult, and geriatric. A service area health care plan addressing each stage of the life cycle must be developed for the purpose of directing the delivery of services. The plan must be based on a needs/demand assessment of the community, provide for an ongoing quality assurance program, and include a method for evaluating its goals and objectives. The role and responsibility of the clinical director should be addressed with particular attention placed on the clinical director's responsibility for leading the clinical team and conducting the quality assurance program.

(c) Governance (42 CFR 51c.304 and 56.304)

Each governing board must represent the population of the catchment area, with center users comprising a majority of membership of the board. Governing boards are expected to be representative of and responsive to the communities they serve, fulfilling all of the functions and responsibilities specified in the legislation and implementing regulations.

(d) Financial/Administrative (42 CFR 51c.303(g), 56.303(r) and (s), and 56.305(a)(3))

C/MHCs and programs must seek to develop and utilize to the greatest extent possible other public and private resources, and must seek to maximize non-grant revenues. In considering which projects to fund, we will assess applicants' plans to minimize dependence upon and need for subsequent C/MHC grants. Priority will be given to centers that demonstrate use of combined resources in coordinated health care service delivery. We will consider the extent to which applicants seeking expansion funds have or plan to develop cooperative linkages and arrangements with other health care organizations, such as through rural consortia and urban networks. See 42 CFR 51c.305(i) and (j), 56.305(a)(6) and (7) and 56.604(a)(2)(iii) and (iv).

To determine each grantee's level of funding, we will review its entire section 330 and/or 329 financed program using a zero-based assessment process. These assessments will be used to ascertain the need for the services and assure that costs of providing the services and revenues generated are acceptable. The reviews will incorporate all of the considerations listed in 42 CFR 51c.305 for CHC grantees and 42 CFR 56.305 or 56.604, as appropriate, for MHC grantees, analyzing: (1) The population to be served; (2) the services to be provided; and (3) the first and third party revenues which can be expected to be generated in that community and State for the services provided.

Proposals for the expansion of activities of existing grantees may incldue, but are not limited to, the establishment of satellite clinics, the expansion of service capacity, and related activities directed toward the expansion and the improvement of the delivery of services, such as improved financial management, planning, marketing, and outreach activities. Expansion dollars will fund specific investments in capital, prepaid or other activities that are both significant components of strategic plans and mutual Bureau of Health Care Delivery and Assistance, State, local and grantee priorities.

Eligibility and Criteria for Evaluating Applications To Provide Technical and Other Non-Financial Assistance Under Section 330(f)(1)

Eligibility to receive funds under this category is based on the provisions of section 330(f)(1) of the PHS Act, authorizing awards to entities which will provide a broad range of technical assistance to CHC/MHCs. A full explanation of the basis on which applications will be reviewed is included in the **Federal Register** Notice, Volume 50, July 8, 1985, page 27851, which will also be included in application kits. In addition, the performance of grant recipients in using previously awarded section 330(f)(1) funds will be considered in determining whether Federal support will be made available to continuation applicants.

Criteria for Evaluating Requests for Funding of Substance Abuse Activities

A full explanation of the basis on which applications will be reviewed is included in the **Federal Register** Notice, Volume 52, Number 64, Friday, April 3, 1987, page 10822, which will also be incldued in the application kits. In addition, the performance of grant recipients in using previously awarded substance abuse funds will be considered in determining whether

Federal support will be made available to continuation applicants.

Criteria for Evaluating Applications for Infant Mortality Reduction Activities

The following will be considered when each proposal is reviewed and evaluated:

- Evidence that the center has demonstrated the ability to conduct an effective perinatal care program serving high-risk women, infants, and children.
- The extent to which the center has documented the unmet need for prenatal, neonatal and infant care of residents of its community. The center should demonstrate its knowledge of other resources available in its community, region, and State to serve high-risk, low income pregnant women and infants, and the extent to which these other providers are serving this population.
- The adequacy and feasibility of the health care plan and new or expanded efforts proposed to meet the needs of the population and to improve pregnancy outcomes by reducing the incidence of infant mortality and morbidity. Particular attention will be focused on the applicant's ability to integrate a case management approach to perinatal care into its overall care delivery program.
- The extent to which the center is part of a system of care within its own community and/or region and has established linkages with referral sources and relevant organizations to supplement its own capacity. A center's ongoing objective must be to increase patient access to services that the State MCH program provides and to State Medicaid benefits, including improved benefits available under the Omnibus Budget Reconciliation Acts of 1986 and 1987.
- The adequacy of the center's plan to evaluate the results of the new activity in terms of improved health status.
- The appropriateness of the proposed budget for this initiative.

Executive Order 12372

All grants to be awarded under this notice are subject to the provisions of Executive Order 12372, as implemented by 45 CFR Part 100, which allows States the option of setting up a system for reviewing applications from within their States for assistance under certain Federal programs. The application packages to be made available by DHHS (standard DHHS Form No. 424 which has been approved under OMB Control No. 0348–0006) will contain a listing of States which have chosen to set up such a review system and will provide a point of contact in the States for that review. Applicants are to contact their State single point of contact and follow their instructions for the review of applications.

In the OMB Catalog of Federal Domestic Assistance, the Community Health Center program is listed as Number 13.224; the Migrant Health Center program is Number 13.246; and the Technical and Other Non-financial Assistance to Community Health Centers in Number 13.129.

Dated: March 4, 1988.

David N. Sundwall,

Administrator.

Appendix—Regional Health Administrators

Edward J. Montminy, Regional Health Administrator, DHHS-Region I, John F. Kennedy Federal Building, Boston, Massachusetts 02203, (617) 565–1420

Vivian Chang, M.D., Regional Health Administrator, DHHS-Region II, 26 Federal Plaza, New York, New York 10278, (212) 264–2560

William Lassek, M.D., Regional Health Administrator, DHHS-Region III, P.O. Box 13716, Philadelphia, Pennsylvania 19101, (215) 596–6637

John Whitney, Acting Regional Health Administrator, DHHS-Region IV, 101 Marietta Tower, Suite 1202, Atlanta, Georgia 30323, (404) 331–2316

E. Frank Ellis, M.D., Regional Health Administrator, DHHS-Region V, 300 South Wacker Drive, Chicago, Ilinois 60606, (312) 353–1385

John M. Dyer, M.D., Regional Health Administrator, DHHS-Region VI, 1200 Main Tower Building, Dallas, Texas 75202, (214) 767–3879

Mr. Youn Bock Rhee, Regional Health Administrator, DHHS-Region VII, 601 East 12th Street, Kansas City, Missouri 64106, (816) 374–3291

Audrey H. Nora, M.D., Regional Health Administrator, DHHS-Region VIII, 1961 Stout Street, Denver, Colorado 80294, (303) 844–6163

Sheridan L. Weinstein, Regional Health Administrator, DHHS-Region IX, 50 United Nations Plaza, San Francisco, California 94102, (415) 556–5810

Ms. Dorothy H. Mann, Regional Health Administrator, DHHS-Region X, 2901 Third Avenue, Mail Stop 501, Seattle, Washington 98121, (206) 442–0430.

[FR Doc. 88–7461 Filed 4–5–88; 8:45 am]

BILLING CODE 4160-15-M

Health Resources and Service Administration

Public Health Service; Program Announcement and Funding Preferences for Grants for Geriatric Education Centers

The Health Resources and Services Administration announces the acceptance of applications for Fiscal Year 1988 Grants for Geriatric Education Centers under the authority of section 788(d) of the Public Health Service Act, as amended by Pub. L. 99–129 and section 301 of the PHS Act, as appropriated under Pub. L. 100–202.

It is expected that approximately $500,000 will be available to support two or three approved proposals submitted in response to this announcement.

The grant requirements and review procedures were published in the **Federal Register** of November 12, 1987 (FR 43399). Grants may be awarded to support the improvement and development of organizational arrangements called Geriatric Education Centers focused on strengthening and coordinating multidisciplinary training in geriatric health care involving several health professions. These centers are established to facilitate training of medical, dental, optometric, pharmacy, podiatric, nursing, and appropriate allied health and public health faculty, students, and practitioners in the diagnosis, treatment and prevention of diseases and other problems of the aged.

To be eligible for a grant under section 788(d) of the PHS Act, the applicant must meet the requirements of a health professions school as defined by section 701(4), program for the training of physician assistants as defined in section 701(8) or a school of allied health as defined in section 701(10). Applicants conducting projects to be administered in other types of organizational settings will be considered for geriatric education center grants under section 301 of the PHS Act.

Applicants must be located in the United States, the Commonwealth of Puerto Rico, the Commonwealth of the Northern Mariana Islands, the Virgin Islands, Guam, American Samoa, the Trust Territory of the Pacific Islands (the Republic of Palau), the Republic of the Marshall Islands, or the Federated States of Micronesia.

Functioning within a defined geographic area, which may be a metropolitan area, a State or portion thereof, or an area including all or part of two or more States, a Geriatric Education Center provides the health professions educational community

within the area with multidisciplinary services which:

(a) Improve the training of health professionals in geriatrics;

(b) Develop and disseminate curricula relating to the treatment of the health problems of elderly individuals;

(c) Expand and strengthen instruction in methods of such treatment;

(d) Support the training and retraining of faculty to provide such instruction (other than training and retraining of faculty of schools of medicine and osteopathy);

(e) Support continuing education of health professionals and allied health professionals who provide such treatment; and

(f) Establish new affiliations with nursing homes, chronic and acute disease hospitals, ambulatory care centers, and senior centers in order to provide students with clinical training in geriatric medicine.

Questions concerning the programmatic aspects of grants should be directed to: Geriatric Program Representative, Division of Associated and Dental Health Professions, Bureau of Health Professions, Health Resources and Services Administration, 5600 Fishers Lane, Room 8-103, Rockville, Maryland 20857, Telephone: (301) 443-6887.

Grant application materials will be provided upon request. Requests for application materials and questions regarding grants policy should be directed to: Grants Management Officer (D-31), Bureau of Health Professions, Health Resources and Services Administration, 5600 Fishers Lane, Room 8C-22, Rockville, Maryland 20857, Telephone: (301) 443-6880.

The standard application, Form PHS 6025-1, HRSA Competing Training Grant Application, General Instructions and supplement for this program, have been approved by the Office of Management and Budget under the Paperwork Reduction Act. The OMB clearance number is 0915-0060.

The application deadline is June 6, 1988. Applications will be considered as meeting the deadline if they are either:

1. *Received* on or before the deadline date, or

2. *Postmarked* on or before the deadline and received in time for submission to the independent review group. A legibly dated receipt from a commercial carrier of the U.S. Postal Service will be accepteed in lieu of a postmark. Private metered postmarks shall not be acceptable as proof of timely mailing. Applications received after the deadline will be returned to the applicant.

Final funding preferences were published in the **Federal Register** of February 18, 1988 (FR 4894) and are listed below. A funding preference will be given to applications from existing Geriatric Education Centers which have trained substantial numbers of health professions faculty and satisfactorily address the program priorities listed below. Among proposals for new geriatric education centers, preference will be given to applications which satisfactorily address the program priorities addressed below. All applications, however, will be reviewed and given consideration for funding.

(1) Projects which will provide training for faculty from four or more health professions, at least one of which must be allopathic or osteopathic medicine, with respect to the treatment of health problems of the elderly by multidisciplinary teams of health professionals. A retraining program for faculty in schools of medicine and osteopathy in geriatrics or a one-year or two-year internal medicine or family medicine fellowship program as identified in section 788(e)(3) of the Act is not eligible under section 788(d) of the PHS Act and does not qualify for this funding preference.

(2) Projects which currently have or plan to provide for a high degree of areawide collaboration as evidenced by:

(a) Significant multidisciplinary health care educational activities;

(b) Letters of agreement or assurance, among participating entities, such as professional schools, teaching facilities and other clinical sites, professional associations, and State and local health agencies; and

(c) Organizational or other arrangements for participation by the social and behavioral sciences disciplines;

(3) Preference will be given to applicants from institutions that demonstrate a commitment to increase minority participation in their program, show evidence of efforts to recruit minority faculty participants, or demonstrate substantial benefit from the project to disadvantaged population groups in primary medical care manpower shortage area(s) designated under section 332 of the Public Health Service Act.

After a peer review group composed principally of non-Federal experts makes recommendation concerning each application, the Secretary will consult with the National Advisory Council on Health Professions Education with respect to such applications. The following factors listed in 42 CFR 57.3905 will be considered, among other factors, in the review of applications.

(1) The degree to which the proposed project adequately provides for the project requirements described in 42 CFR 57.3904;

(2) The adequacy of the qualifications and experience of the staff and faculty;

(3) The administrative and managerial ability of the applicant to carry out the proposal in a cost-effective manner; and

(4) The protential of the project to continue on a self-sustaining basis.

In determining projects to be funded from among applicants recommended for approval, including those assigned a funding preference, the Secretary, after consultation with the National Advisory Council on Health Professions Education, may give consideration to the geographic location of the project in relation to other Geriatric Education Centers funded or to be funded by this grant program and to regional and areawide needs.

This program is listed at 13.969 in the *Catalog of Federal Domestic Assistance.* It is not subject to the provisions of Executive Order 12372, Intergovernmental Review of Federal Programs (as implemented through 45 CFR Part 100).

Dated: March 31, 1988.

David N. Sundwall,

Administrator, Assistant Surgeon General.

[FR Doc. 88-7527 Filed 4-5-88; 8:45 am]

BILLING CODE 4160-15-M

Public Health Service

Office of the Assistant Secretary for Health; Statement of Organization, Functions and Delegations of Authority

Part H, Public Health Service (PHS), Chapter HA (Office of the Assistant Secretary for Health) of the Statement of Organization, Functions and Delegations of Authority for the Department of Health and Human Services (DHHS) (42 FR 61318, as amended most recently at 53 FR 5321-5322, February 23, 1988) is amended to reflect establishment of a new Division of PHS Budget within the Office of Resource Management, Office of Management, Office of the Assistant Secretary for Health (OASH), and to make other changes within the Office of Management to reflect more accurately the current responsibilities of the Office of Management.

Office of the Assistant Secretary for Health

Under *Chapter HA, Office of the Assistant Secretary for Health, Section HA.20, Functions, Office of Management (HAU), Office of Resource Management*

(HAU4), after the statement for *Divison of Health Facilities Planning (HAU43)* add the following title and statement:

Division of PHS Budget (HAU44) The Director of the Division of PHS Budget serves as the principal advisor in the area of the PHS budget activities.

The division: (1) Provides recommendations to the Director, Office of Resource Management, Office of Management, and the Deputy Assistant Secretary for Health Operations, on PHS budget priorities, proposals, allocations and budgetary activities; (2) provides guidance and instructions to PHS components in budget preparations and allocations; (3) provides technical assistance to PHS agencies, initiates and provides recommendations on reprogramming; (4) prepares material and briefs the ASH for discussions with the Secretary, the Assistant Secretary for Management and Budget, the Office of Management and Budget and committee staff; (5) prepares testimony for ASH before Congress; (6) analyzes and assesses agency programs related to budgetary implications and program objectives; (7) operates the Budget Information System; (8) manages a system of budget apportionment and review; (9) provides recommendations on budgetary implications of legislative proposals; (10) maintains liaison with the Office of the Secretary and the Office of Management and Budget, and (11) coordinates, analyzes and prepares reports for intra- and interagency resource allocations and utilization.

Under the statement for the Division of Financial Management (HAU41), delete the last line of the statement "and maintains liaison with the Office of the Secretary and the Office of Management and Budget," and add the following to the end of the statement: "serves as principal advisor within PHS for developing policies, guidelines and procedures in the area of cost and audit management; and maintains liaison with the Office of the Secretary and the Office of Management and Budget."

Under the statement for the Division of Grants and Contracts (HAU42), delete the first two lines of the statement, "In the area of grants, procurement, and cost management," and add the following: "In the area of grants and procurement,"

At the end of the statement for the Division of Grants and Contracts (HAU42), delete the line "and prepares reports as required." and add "manages a total PHS claims program (i.e., investigation, evaluation and recommendation for disposition of a wide variety of claims, etc.); administers debt management activities; and prepares reports as required."

Under the title and statement for the Administrative Services Center (HAU1), Division of Administrative Operations (HAU15), delete from the statement, the function "providing a total PHS claims program (i.e., investigation, evaluation and recommendation for disposition of a wide variety of claims, etc.);

Dated: March 25, 1988.

Robert E. Windom,

Assistant Secretary for Health.

[FR Doc. 88-7488 Filed 4-5-88; 8:45 am]

BILLING CODE 4160-17-M

DEPARTMENT OF THE INTERIOR

Bureau of Indian Affairs

Indian Health Service; National Oversight Committee on Child Protection; Meeting

March 30, 1988.

Time and Date: 9:00 a.m. to 4:00 p.m., April 11-14, 1988.

Place: Department of the Interior; Main Interior Building, Room B-270.

Status: Open. Attendees should preregister by 4:00 p.m. of April 10, 1988 by calling (202) 343-6434, to insure entrance into the building as the meeting room is located in a government secured facility.

Matters to be Considered: The purpose of the meeting will be to discuss, update and work on specific activities and tasks related to Indian child protection issues previously identified by the oversight committee. This information will be available to non-committee members at the meeting or will be mailed upon request prior to the meeting. The committee will also discuss the national conference, "Promoting Child Protection In Indian Country," for June 28-30, 1988, in Green Bay, Wisconsin.

Contact Person for More Information: Louise Zokan—Delos Reyes, Chief, Branch of Child and Family Services, Division of Social Services, Bureau of Indian Affairs, (202) 343-6435.

Ross O. Swimmer,

Assistant Secretary, Indian Affairs.

[FR Doc. 88-7448 Filed 4-5-88; 8:45 am]

BILLING CODE 4310-02-M

Bureau of Land Management

[NM-010-3110-10-7202, NM 68533); 8-00153-I-LM-NM-010-GP8-0116]

Albuquerque District, NM; Realty Action of Proposed BLM/State Land Exchange in Cibola, Valencia, Bernalillo and Socorro Counties, NM; Correction

AGENCY: Bureau of Land Management (BLM), Interior.

ACTION: Corretion. Notice of Realty Action on Proposed BLM/State Land Exchange (NM 68533).

SUMMARY: In FR Doc. 88-4827 appearing in page 7404 in the issue of Tuesday, March 8, 1988, make the following correction: Under T. 4N., R. 9W., the entry for "Sec. 6" should read Lots 1, 2, 4, 5.

Michael F. Reitz,

Associate District Manager.

[FR Doc. 88-7472 Filed 4-5-88; 8:45 am]

BILLING CODE 4310-FB-M

[UT-060-06-4410-08]

Utah; Propane Resources Management Plan, San Juan Area

AGENCY: Bureau of Land Management, Utah, Interior.

ACTION: Notice of further review and comment of the San Juan Resource Area Proposed Resource Management Plan.

SUMMARY: As a result of the public review and protest process of the Final Environmental Impact Statement and Proposed Resource Management Plan (FEIS/PRMP) for the San Juan Resource Area in Utah, the Bureau of Land Management (BLM) has decided to obtain further review and public input on the document.

In order to aid in this review of the Proposed Resources Management Plan, the Moab District Manager will be accepting comments on the proposed plan until June 13, 1988. No specific form or format is required, but comments shall be sent to: District Manager, Bureau of Land Management, 82 East Dogwood, Moab, Utah 84532.

All protests and comments that have been received and all new comments will be incorporated into the review and will become part of the record. Upon completion of the review and reconsideration, another opportunity to protest the plan will be provided before the plan is approved.

FOR FURTHER INFORMATION CONTACT: Daryl Trotter, Moab District, Bureau of Land Management, 82 East Dogwood, Moab, Utah 84532; (801) 259-6111. Copies of the proposed San Juan RMP are available for review nationwide at Depository Libraries and in all BLM offices within Utah.

Dated: March 30, 1988.

Kemp Conn,

Acting State Director.

[FR Doc. 88-7477 Filed 4-5-88; 8:45 am]

BILLING CODE 4310-DQ-M

[AZ-050-08-4830-02]

Arizona; Yuma District Advisory Council Meeting

AGENCY: Bureau of Land Management, Interior.

ACTION: Yuma (Arizona) District Advisory Council Meeting and Field Tour.

SUMMARY: A meeting and field tour of the Yuma District Advisory Council will occur on Friday, May 6, 1988. Council members will meet briefly at 9 a.m. at Havasu Springs Resort located off Highway 95 on Lake Havasu, approximately ½ mile north of Parker Dam, Arizona. At approximately 9:15 a.m., the Council will leave on a field tour of the Bill Williams River. At approximately 1 p.m., the Council will hold a regular meeting at the Havasu Springs Restaurant.

DATE: Friday, May 6, 1988.

FOR FURTHER INFORMATION CONTACT: Douglas B. Stockdale, Yuma District Office, 3150 Winsor Avenue, Yuma, Arizona 85365, 602-726-6300.

SUPPLEMENTARY INFORMATION: During the regular Council meeting, the Bill Williams River tour will be summarized, and District and Resource Area program updates will be discussed. Additional agenda topics will include an update on Wilderness, a review of the District's leases, a review of the 1988 Quartzsite Pow Wow and Parker-SCORE 400, a review of the Wild Horse and Burro Program including adoptions, an update on water transfer bills, and other Council initiated business. The public is invited to attend the tour and the meeting, but must furnish their own transportation. Written statements from the public may be filed for the Council's consideration. Statements must arrive at the Yuma District Office by April 30, 1988. Oral statements will also be accepted, but depending on the number of persons wishing to address the Council, a per person time limit may be imposed.

Summary minutes of the District Advisory Council meeting will be maintained in the Yuma District Office, and will be available for inspection and reproduction during regular business hours (7:45 a.m. through 4:30 p.m.) within 30 days of the meeting.

Robert V. Abbey

Acting District Manager.

Dated: March 28, 1988.

[FR Doc. 88-7492 Filed 4-5-88; 8:45 am]

BILLING CODE 4310-32-M

Fish and Wildlife Service

Information Collection Submitted to the Office of Management and Budget for Review Under the Paperwork Reduction Act

The proposal for the collection of information listed below has been submitted to the Office of Management and Budget (OMB) for approval under the provisions of the Paperwork Reduction Act (44 U.S.C. Chapter 35). Copies of the proposed information collection requirement and related forms and explanatory material may be obtained by contacting the Service's clearance officer at the phone number listed below. Comments and suggestions on the requirement should be made directly to the Service Clearance Officer and the OMB Interior Desk Officer, Washington, DC 20503, telephone 202-395-7340.

Title: Taking of Marine Mammals Incidental to Commercial Fishing Operations; Small Take Exemption

Abstract: The Marine Mammal Protection Act (Act), as amended in 1981, provides guidelines for the establishment of a cooperative system among fishermen in Alaska for the monitoring of incidental takes of small numbers of non-depleted species or stocks of marine mammals while engaged in commercial fishing. The information collected will be used by the Service to issue Letters of Exemption.

Service Form Number(s): N/A

Frequency: Annually

Description of Respondents: Individuals or households; small businesses; State and local governments

Annual Responses: 205

Annual Burden Hours: 102

Service Clearance Officer: James E. Pinkerton, 202-653-7500, Room 859, Riddell Building, U.S. Fish and Wildlife Service, Washington, DC 20240

Dated: February 16, 1988.

Gary Edwards,

Assistant Director, Fisheries.

[FR Doc. 88-7491 Filed 4-5-88; 8:45 am]

BILLING CODE 4310-55-M

INTERNATIONAL TRADE COMMISSION

Agency Form Submitted for OMB Review

AGENCY: International Trade Commission.

ACTION: In accordance with the provisions of the Paperwork Reduction Act of 1980 (44 U.S.C. Chapter 35), the Commission has submitted a proposal for the collection of information to the Office of Management and Budget (OMB) for review.

Purpose of Information Collection: The proposed information collection is for use by the Commission in connection with investigation No. 332-253, Competitive Conditions in the U.S. Market for Asparagus, Broccoli, and Cauliflower, instituted under the authority of section 332 of the Tariff Act of 1930 (19 U.S.C. 1332).

Summary of Proposal:

(1) Number of forms submitted: four

(2) Title of form: Competitive Conditions in the U.S. Market for Asparagus, Broccoli, and Cauliflower—Questionnaires for U.S. (1) Growers, (2) Freezers, (3) Canners, and (4) Importers and/or Purchasers

(3) Type of request: new

(4) Frequency of use: nonrecurring

(5) Description of respondents: firms which grow, freeze, process (can), import or purchase asparagus, broccoli, and cauliflower

(6) Estimated number of respondents: 242.

Growers: 120, based on an estimated response rate of 80 percent.

Freezers: 16, based on an estimated response rate of 80 percent.

Canners: 16, based on an estimated response rate of 80 percent.

Importers/purchasers: 90, based on an estimated response rate of 60 percent.

(7) Estimated total number of hours to complete the forms: 5,480. Field testing of the questionnaires yielded an estimated response time of 20 hours per questionnaire for growers and importer/purchasers and 40 hours per questionnaire for freezers and canners.

(8) Information obtained from the form that qualifies as confidential business information will be so treated by the Commission and not disclosed in a manner that would reveal the individual operations of a firm.

Additional Information or Comment: Copies of the proposed form and supporting documents may be obtained from David L. Ingersoll (USITC tel. No. 202-252-1309). Comments about the proposal should be directed to the Office of Information and Regulatory Affairs, Office of Management and Budget, New Executive Office Building, Washington, DC 20503, Attention: Francine Picoult, Desk Officer for U.S. International Trade Commission. Any comments should be specific, indicating which part of the questionnaire or study plan is objectionable, describing the problem in detail, and including specific

suggested revisions or language changes.

Submission of Comments: Comments should be submitted to OMB within two weeks of the date this notice appears in the **Federal Register.** If you are unable to submit them promptly you should advise OMB within the two week period of your intent to comment on the proposal. Ms. Picoult's telephone number is 202-395-7340. Copies of any comments should be provided to Charles Ervin (United States International Trade Commission, 500 E Street SW., Washington, DC 20436.)

Hearing impaired individuals are advised that information on this matter can be obtained by contacting our TDD terminal on (202) 252-1810.

By order of the commission.

Kenneth R. Mason,

Secretary.

Issued: April 1, 1988.

[FR Doc. 88-7549 Filed 4-5-88; 8:45 am]

BILLING CODE 7020-02-M

[Investigation No. 731-TA-388 (Preliminary)]

Certain All-Terrain Vehicles From Japan

Determination

On the basis of the record [1] developed in the subject investigation, the Commission unanimously determines, pursuant to section 733(a) of the Tariff Act of 1930 (19 U.S.C. 1673b(a)), that there is a reasonable indication that an industry in the United States is materially injured by reason of imports from Japan of certain all-terrain vehicles (ATVs),[2] provided for in item 692.10 of the Tariff Schedules of the United States, that are alleged to be sold in the United States at less than fair value (LTFV).

Background

On February 9, 1988, a petition was filed with the Commission and the Department of Commerce by Polaris Industries L.P., Minneapolis, MN, alleging that an industry in the United States is materially injured or threatened with material injury, or the establishment of an industry in the United States is materially retarded by reason of LTFV imports of all-terrain vehicles from Japan. Accordingly, effective February 9, 1988, the Commission instituted preliminary antidumping investigation No. 731-TA-388 (Preliminary).

Notice of the institution of the Commission's investigation and of a public conference to be held in connection therewith was given by posting copies of the notice in the Office of the Secretary, U.S. International Trade Commission, Washington, DC, and by publishing the notice in the **Federal Register** of February 18, 1988 (53 FR 4904). The conference was held in Washington, DC, on March 1, 1988, and all persons who requested the opportunity were permitted to appear in person or by counsel.

The Commission transmitted its determination in this investigation to the Secretary of Commerce on March 25, 1988. The views of the Commission are contained in USITC Publication 2071 (March 1988), entitled "All-Terrain Vehicles from Japan: Determination of the Commission in Investigation No. 731-TA-388 (Preliminary) Under the Tariff Act of 1930, Together With the Information Obtained in the Investigation."

By order of the Commission.

Kenneth R. Mason,

Secretary.

Issued: March 25, 1988.

[FR Doc. 88-7550 Filed 4-5-88; 8:45 am]

BILLING CODE 7820-02-M

[Investigation No. 337-TA-280]

Certain High Geometric Surface Area Catalysts and Components Thereof; Initial Determination Terminating Respondent on the Basis of Settlement Agreement

AGENCY: U.S. International Trade Commission.

ACTION: Notice is hereby given that the Commission has received an initial determination from the presiding officer in the above-captioned investigation terminating the following respondent on the basis of a settlement agreement: Haldor Topsoe, A/S and Haldor Topsoe, Inc.

SUPPLEMENTARY INFORMATION: This investigation is being conducted pursuant to section 337 of the Tariff Act of 1930 (19 U.S.C. 1337). Under the Commission's rules, the presiding officer's initial determination will become the determination of the Commission thirty (30) days after the date of its service upon the parties, unless the Commission orders review of the initial determination. The initial determination in this matter was served upon the parties on April 1, 1988.

Copies of the initial determination, the settlement agreement, and all other nonconfidential documents filed in connection with this investigation are available for inspection during official business hours (8:45 a.m. to 5:15 p.m.) in the Office of the Secretary, U.S. International Trade Commission, 500 E Street SW., Washington, DC 20436, telephone 202-252-1000. Hearing impaired individuals are advised that information on this matter can be obtained by contacting the Commission's TDD terminal on 202-252-1810.

Written Comments; Interested persons may file written comments with the Commission concerning termination of the aforementioned respondent. The original and 14 copies of all such comments must be filed with the Secretary to the Commission, 500 E Street SW., Washington, DC 20436, no later than 10 days after publication of this notice in the **Federal Register.** Any person desiring to submit a document (or portion thereof) to the Commission in confidence must request confidential treatment. Such requests should be directed to the Secretary to the Commission and must include a full statement of the reason why confidential treatment should be granted. The Commission will either accept the submission in confidence or return it.

FOR FURTHER INFORMATION CONTACT: Ruby J. Dionne, Office of the Secretary, U.S. International Trade Commission, telephone 202-252-1805.

By order of the Commission.

Kenneth R. Mason,

Secretary.

Issued: April 1, 1988.

[FR Doc. 88-7551 Filed 4-5-88; 8:45 am]

BILLING CODE 7020-02-M

[Investigation No. 337-TA-278]

Certain Programmable Digital Clock Thermostats; Notice

Notice is hereby given that the prehearing conference in this matter will commence at 9:00 a.m. on April 11, 1988, in Courtroom C (Room 217), U.S. International Trade Commission

---

[1] The record is defined in § 207.2(i) of the Commission's Rules of Practice and Procedure (19 CFR 207.2(i)).

[2] The products covered by this investigation are all-terrain vehicles, assembled or unassembled, currently reported under item 692.1090 of the Tariff Schedules of the United States Annotated (TSUSA) and classifiable in subheading 8703.21.0000 of the proposed Harmonized Tariff Schedule of the United States. ATVs are motor vehicles designed for off-payment use by one operator and no passengers and contain internal combustion engines of less than 1000cc cylinder capacity. The ATVs under investigation are non-amphibious, have three or four wheels, and weigh less than 600 pounds. They have a seat designed to be straddled by the operator and handlebars for steering control.

Building, 500 E St. S.W., Washington, DC, and the hearing will commence immediately thereafter.

The Secretary shall publish this notice in the **Federal Register.**

Janet D. Saxon,

Administrative Law Judge.

Issued: March 31, 1988.

[FR Doc. 88-7552 Filed 4-5-88; 8:45 am]

BILLING CODE 7020-02-M

INTERSTATE COMMERCE COMMISSION

[Finance Docket No. 31224]

Tennessee Southern Railroad Co., Inc.; Acquisition and Operation Exemption, Certain Lines of the Southern Railway Co.

AGENCY: Interstate Commerce Commission.

ACTION: Notice of exemption.

SUMMARY: The Interstate Commerce Commission exempts under 49 U.S.C. 10505 from the prior approval requirements of 49 U.S.C. 11343, *et seq.*, the acquisition and operation by Tennessee Southern Railroad Company, Inc. (TSRC) of 1.40 miles of railroad between milepost 7.0-MF and milepost 8.4-MF in Florence, AL, subject to standard labor protective conditions and a historic preservation condition.

DATES: This exemption will be effective on May 6, 1988. Petitions to stay must be filed by April 18, 1988, and petitions for reconsideration must be filed by April 26, 1988.

ADDRESSES: Send pleadings referring to Finance Docket No. 31224 to:

(1) Office of the Secretary, Case Control Branch, Interstate Commerce Commission, Washington, DC 20423

(2) Petitioner's representative: Mark M. Levin, Weiner, McCaffrey, Brodsky, & Kaplan, P.C. 1350 New York Avenue NW., Suite 800, Washington, DC 20005.

FOR FURTHER INFORMATION CONTACT: Joseph H. Dettmar, (202) 275-7245. (TDD for hearing impaired: (202) 275-1721)

SUPPLEMENTARY INFORMATION: Additional information is contained in the Commission's decision. To purchase a copy of the full decision, write to Dynamic Concepts, Inc., Room 2229, Interstate Commerce Commission Building, Washington, DC 20423, or call (202) 289-4357/4359 (DC Metropolitan Area).

Decided: March 30, 1988.

By the Commission, Chairman Gradison, Vice Chairman Andre, Commissioners Sterrett, Simmons, and Lamboley.

Noreta R. McGee,

Secretary.

[FR Doc. 88-7483 Filed 4-5-88; 8:45 am]

BILLING CODE 7035-01-M

DEPARTMENT OF JUSTICE

Antitrust Division

National Cooperative Research Notifications; Bell Communications Research, Inc.

Notice is hereby given that, pursuant to section 6(a) of the National Cooperative Research Act of 1984, 15 U.S.C. 4301 et seq. ("the Act"), Bell Communications Research, Inc. ("Bellcore") has filed written notifications, on behalf of Bellcore and Sumitomo Electric Industries, Ltd., ("Sumitomo"), simultaneously with the Attorney General and the Federal Trade Commission disclosing (1) the identities of the parties of the joint venture and (2) the nature and objectives of the joint venture. The notifications were filed for the purpose of invoking the Act's provisions limiting the recovery of antitrust plaintiffs to actual damages under specified circumstances. Pursuant to section 6(b) of the Act, the identities of the parties to the joint venture, and its general areas of planned activities, are given below.

Bellcore is a Delaware corporation with its principal place of business at 290 W. Mt. Pleasant Avenue, Livingston, New Jersey 07039.

Sumitomo is a Japanese corporation with its principal place of business at 15 Kitahama 5-chome, Higashi-ku, Osaka, 541 Japan.

Bellcore and Sumitomo entered into a agreement effective January 20, 1988 to collaborate in research with respect to semiconductor materials and experimental semiconductor devices of interest for high speed electronics applications to integrated optoelectronic devices useful for exchange and exchange access services, including demonstrating feasibility of research concepts by experimental prototypes and experimental systems.

Joseph H. Widmar,

Director of Operations, Antitrust Division.

[FR Doc. 88-7519 Filed 4-5-88; 8:45 am]

BILLING CODE 4410-01-M

Drug Enforcement Administration

Norberto T. Agustin, M.D., Revocation of Registration

On September 30, 1987, the Deputy Assistant Administrator, Office of Diversion Control, Drug Enforcement Administration (DEA) issued an Order to Show Cause to Norberto T. Agustin, M.D., 219 Central Avenue, Wilmette, Illinois 60091, proposing to revoke his DEA Certificate of Registration AA5922869, and to deny any pending applications for renewal of such registration. The proposed action was predicated on Dr. Agustin's lack of state authorization to handle controlled substances in the State of Illinois. 21 U.S.C. 842(a)(3).

The Order to Show Cause was sent registered mail, return recipient requested, to the address Dr. Agustin used for his registration. It was returned undelivered on November 1, 1987. With Dr. Agustin's permission, his attorney accepted service on December 8, 1987. By letter dated December 23, 1987, Dr. Agustin's attorney indicated that she could not locate Dr. Agustin and requested that this matter be set aside until he could be contacted. DEA advised that no action would be taken before February 1, 1988. Since neither Dr. Agustin, nor his attorney, has filed a written request for a hearing, the Administrator finds that Dr. Agustin has waived his opportunity for a hearing on the issues raised by the Order to Show Cause, and enters this final order based on the record as it appears. 21 CFR 1301.54(d) and 1301.54(e).

The Administrator finds that on February 14, 1985, the Illinois Department of Registration and Education filed a complaint against Dr. Agustin alleging that he wrote prescriptions for Schedule II controlled substances on another physician's triplicate prescription forms while signing the order physician's name and DEA registration number. The Illinois Medical Disciplinary Board and the Illinois Controlled Substances Hearing Officer held hearings in September, October, and December 1986, and January 1987. Both the Medical Disciplinary Board and the Hearing Officer recommended that Dr. Agustin's medical license and controlled substances license be revoked for a period of not less than two years. Dr. Agustin filed a motion for rehearing which was denied. On May 21, 1987, the Illinois Department of Registration and

Education revoked Dr. Agustin's medical license and controlled substances license for a period of not less than two years.

The Administrator finds that Dr. Agustin is not authorized to handle controlled substances in the State of Illinois. The Administrator has consistently held that when a DEA registrant is not authorized to handle controlled substances under the laws of the state in which he practices, DEA is without lawful authority to maintain a registration. See *Emerson Emory, M.D.*, Docket No. 85-46, 51 FR 9543 (1986); *Avner Kauffman, M.D.*, Docket No. 85-8, 50 FR 34208 (1985).

Accordingly, the Administrator of the Drug Enforcement Administration, pursuant to the authority vested in him by 21 U.S.C. 823 and 824 and 28 CFR 0.100(b), hereby orders that DEA Certificate of Registration AA5922869, previously issued to Dr. Norberto T. Agustin be, and it hereby is, revoked. It is further ordered that any pending applications for renewal be, and they hereby are, denied. This order is effective May 6, 1988.

Dated: March 30, 1988.

John C. Lawn,

Administrator.

[FR Doc. 88-7528 Filed 4-5-88; 8:45 am]

BILLING CODE 4410-09-M

Hoffmann-La Roche Inc., Manufacturer of Controlled Substances; Registration

By Notice dated December 15, 1987, and published in the **Federal Register** on December 22, 1987; (52 FR 48466), Hoffmann-La Roche Inc., 340 Kingsland Street, Nutley, New Jersey 07110, made application to the Drug Enforcement Administration to be registered as a bulk manufacturer of the basic classes of controlled substances listed below:

Drug	Schedule
Tetrahydrocannabinols (7370)	I
Alphaprodine (9010)	II
Levorphanol (9220)	II

No comments or objections have been received. Therefore, pursuant to section 303 of the Comprehensive Drug Abuse Prevention and Control Act of 1970 and Title 21, Code of Federal Regulations, § 1301.54(e), the Deputy Assistant Administrator hereby orders that the application submitted by the above firm for registration as a bulk manufacturer of the basic classes of controlled substances listed above is granted.

Gene R. Haislip,

Deputy Assistant Administrator, Office of Diversion Control, Drug Enforcement Administration.

Dated: March 30, 1988.

[FR Doc. 88-7529 Filed 4-5-88; 8:45 am]

BILLING CODE 4410-09-M

[Docket No. 87-75]

Holme Drug Store, Philadelphia, PA; Hearing

Notice is hereby given that on October 28, 1987, the Drug Enforcement Administration, Department of Justice, issued to Roberts Cape Coral Pharmacy an Order to Show Cause as to why the Drug Enforcement Administration should not revoke your DEA Certificate of Registration AH2343438 and deny any pending applications for registration.

Thirty days having elapsed since the said Order to Show Cause was received by Respondent, and written request for a hearing having been filed with the Drug Enforcement Administration, notice is hereby given that a hearing in this matter will be held on Wednesday, April 27, 1988, commencing at 10:00 a.m., at the U.S. Claims Court, Courtroom 10, Room 309, 717 Madison Place NW., Washington, DC.

Dated April 1, 1988.

John C. Lawn,

Administrator, Drug Enforcement Administration.

[FR Doc. 88-7530 Filed 4-5-88; 8:45 am]

BILLING CODE 4410-09-M

Knoll Pharmaceuticals, Manufacturer of Controlled Substances; Application

Pursuant to § 1301.43(a) of Title 21 of the Code of Federal Regulations (CFR), this is notice that on February 8, 1988, Knoll Pharmaceuticals, 30 North Jefferson Road, Whippany, New Jersey 07981, made application to the Drug Enforcement Administration (DEA) for registration as a bulk manufacturer of the Schedule II controlled substance hydrocodone (9193).

Any other such applicant and any person who is presently registered with DEA to manufacture such substance may file comments on objections to the issuance of the above application and may also file a written request for a hearing thereon in accordance with 21 CFR 1301.54 and in the form prescribed by 21 CFR 1316.47.

Any such comments, objections or requests for a hearing may be addressed to the Deputy Assistant Administrator, Drug Enforcement Administration, United States Department of Justice, 1405 I Street, NW., Washington, DC 20537, Attention: DEA Federal Register Representative (Room 1112), and must be filed no later than May 6, 1988.

Gene R. Haislip,

Deputy Assistant Administrator, Office of Diversion Control, Drug Enforcement Administration.

Dated: March 30, 1988.

[FR Doc. 88-7531 Filed 4-5-88; 8:45 am]

BILLING CODE 4410-09-M

[Docket No. 87-74]

Leonardo V. Lopez, M.D., Southgate, MI; Hearing

Notice is hereby given that on October 1, 1987, the Drug Enforcement Administration, Department of Justice, issued to Leonardo V. Lopez, M.D., an Order to Show Cause as to why the Drug Enforcement Administration should not deny your application for registration.

Thirty days having elapsed since the said Order to Show Cause was received by Respondent, and written request for a hearing having been filed with the Drug Enforcement Administration, notice is hereby given that a hearing in this matter will be held on Tuesday, April 12, 1988, commencing at 9:30 a.m., at the University of Michigan Law School, Room 232, Hutchins Hall, Ann Arbor, Michigan.

Dated: April 1, 1988.

John C. Lawn,

Administrator, Drug Enforcement Administration.

[FR Doc. 88-7532 Filed 4-5-88; 8:45 am]

BILLING CODE 4410-09-M

McNeilab, Inc., Importation of Controlled Substances; Application

Pursuant to section 1008 of the Controlled Substances Import and Export Act (21 U.S.C. 958(h)), the Attorney General shall, prior to issuing a registration under this section to a bulk manufacturer of a controlled substances in Schedule I or II and prior to issuing a regulation under section 1002(a) authorizing the importation of such a substance, provide manufacturers holding registrations for the bulk manufacture of the substance an opportunity for a hearing.

Therefore, in accordance with § 1311.42 of Title 21, Code of Federal Regulations (CFR), notice is hereby given that on January 4, 1988, McNeilab, Inc., Welsh and McKean Roads, Spring

House, Pennsylvania 19477, made application to the Drug Enforcement Administration to be registered as an importer of difenoxin (9168), a basic class controlled substance in Schedule I.

Any manufacturer holding, or applying for, registration as a bulk manufacturer of this basic class of controlled substance may file written comments on or objections to the application described above and may, at the same time, file a written request for a hearing on such application in accordance with 21 CFR 1301.54 in such form as prescribed by 21 CFR 1316.47.

Any such comments, objections or requests for a hearing may be addressed to the Deputy Assistant Administrator, Drug Enforcement Administration, United States Department of Justice, 1405 I Street NW., Washington, DC 20537, Attention: DEA Federal Register Representative (Room 1112), and must be filed no later than May 6, 1988.

This procedure is to be conducted simultaneously with and independent of the procedures described in 21 CFR 1311.42 (b), (c), (d), (e) and (f). As noted in a previous notice at 40 FR 43745–46 (September 23, 1976), all applicants for registration to import a basic class of any controlled substance in Schedule I or II are and will continue to be required to demonstrate to the Deputy Assistant Administrator of the Drug Enforcement Administration that the requirements for such registration pursuant to 21 U.S.C. 958(a), 21 U.S.C. 823(a), and 21 CFR 1311.42 (a), (b), (c), (d), (e) and (f) are satisfied.

Gene R. Haislip,

Deputy Assistant Administrator, Office of Diversion Control, Drug Enforcement Administration.

Dated: March 30, 1988.

[FR Doc. 88–7533 Filed 4–5–88; 8:45 am]

BILLING CODE 4410-09-M

[Docket No. 87-78]

Ratnam B. Nagalla, M.D., Winnfield, LA; Hearing

Notice is hereby given that on November 13, 1987, the Drug Enforcement Administration, Department of Justice, issued to Ratnam B. Nagalla, M.D., an Order to Show Cause as to why the Drug Enforcement Administration should not revoke your DEA Certificate of Registration, AN7413230, and deny any pending applications for registration.

Thirty days having elapsed since the said Order to Show Cause was received by Respondent, and written request for a hearing having been filed with the Drug Enforcement Administration, notice is hereby given that a hearing in this matter will be held on Thursday, May 12, 1988, commencing at 10:00 a.m., at the U.S. Court of Appeals for the Fifth Circuit, 600 Camp Street, Courtroom No. 223, Room 102, New Orleans, Louisiana.

Dated: April 1, 1988.

John C. Lawn,

Administrator, Drug Enforcement Administration.

[FR Doc. 88–7534 Filed 4–5–88; 8:45 am]

BILLING CODE 4410-09-M

[Docket No. 87-79]

James E. Pate, D.D.S., Nashville TN; Hearing

Notice is hereby given that on November 13, 1987, the Drug Enforcement Administration, Department of Justice, issued to James E. Pate, D.D.S., an Order to Show Cause as to why the Drug Enforcement Administration should not revoke your DEA Certificate of Registration, BPO322228, and deny any pending applications for registration.

Thirty days having elapsed since the said Order to Show Cause was received by Respondent, and written request for a hearing having been filed with the Drug Enforcement Administration, notice is hereby given that a hearing in this matter will be held on Tuesday, May 10, 1988, commencing at 10:00 a.m., at the U.S. Bankruptcy Court, 218 Customs House, 701 Broadway, Courtroom No. 218, Nashville, Tennessee.

Dated: April 1, 1988.

John C. Lawn,

Administrator, Drug Enforcement Administration.

[FR Doc. 88–7535 Filed 4–5–88; 8:45 am]

BILLING CODE 4410-09-M

[Docket No. 88-17]

Roberts Cape Coral Pharmacy, Cape Coral, FL; Hearing

Notice is hereby given that on October 1, 1987, the Drug Enforcement Administration, Department of Justice, issued to Roberts Cape Coral Pharmacy an Order to Show Cause as to why the Drug Enforcement Administration should not revoke your DEA Certificate of Registration, AR7370694 and deny any pending applications for registration.

Thirty days having elapsed since the said Order to Show Cause was received by Respondent, and written request for a hearing having been filed with the Drug Enforcement Administration, notice is hereby given that a hearing in this matter will be held on Thursday, April 14, 1988, commencing at 10:00 a.m., at the U.S. Tax Court, Federal Building, 51 SW. First Avenue, Courtroom 1524, Miami, Florida.

Dated: April 1, 1988.

John C. Lawn,

Administrator, Drug Enforcement Administration.

[FR Doc. 88–7536 Filed 4–5–88; 8:45 am]

BILLING CODE 4410-09-M

DEPARTMENT OF LABOR

Pension and Welfare Benefits Administration

[Application No. D-7248 et al.]

Proposed Exemptions; Modern Display Service, Inc., et al.

AGENCY: Pension and Welfare Benefits Administration, Labor.

ACTION: Notice of proposed exemptions.

SUMMARY: This document contains notices of pendency before the Department of Labor (the Department) of proposed exemptions from certain of the prohibited transaction restrictions of the Employee Retirement Income Security Act of 1974 (the Act) and/or the Internal Revenue Code of 1954 (the Code).

Written Comments and Hearing Requests

All interested persons are invited to submit written comments or requests for a hearing on the pending exemptions, unless otherwise stated in the Notice of Pendency, within 45 days from the date of publication of this **Federal Register** Notice. Comments and requests for a hearing should state the reasons for the writer's interest in the pending exemption.

ADDRESS: All written comments and requests for a hearing (at least three copies) should be sent to the Pension and Welfare Benefits Administration, Office of Regulations and Interpretations, Room N-5669, U.S. Department of Labor, 200 Constitution Avenue, NW., Washington, DC 20210. Attention: Application No. stated in each Notice of Pendency. The applications for exemption and the comments received will be available for public inspection in the Public Documents Room of Pension and Welfare Benefit Programs, U.S. Department of Labor, Room N-4677, 200 Constitution Avenue, NW., Washington, DC 20210.

Notice to Interested Persons

Notice of the proposed exemptions will be provided to all interested persons in the manner agreed upon by the applicant and the Department within 15 days of the date of publication in the **Federal Register**. Such notice shall include a copy of the notice of pendency of the exemption as published in the **Federal Register** and shall inform interested persons of their right to comment and to request a hearing (where appropriate).

SUPPLEMENTARY INFORMATION: The proposed exemptions were requested in applications filed pursuant to section 408(a) of the Act and/or section 4975(c)(2) of the Code, and in accordance with procedures set forth in ERISA Procedure 75–1 (40 FR 18471, April 28, 1975). Effective December 31, 1978, section 102 of Reorganization Plan No. 4 of 1978 (43 FR 47713, October 17, 1978) transferred the authority of the Secretary of the Treasury to issue exemptions of the type requested to the Secretary of Labor. Therefore, these notices of pendency are issued solely by the Department.

The applications contain representation with regard to the proposed exemptions which are summarized below. Interested persons are referred to the applications on file with the Department for a complete statement of the facts and representations.

Modern Display Service, Inc. Employees Profit Sharing Plan (the Plan) Located in Salt Lake City, Utah

[Application No. D–7248]

Proposed Exemption

The Department is considering granting an exemption under the authority of section 408(a) of the Act and section 4975(c)(2) of the Code and in accordance with the procedures set forth in ERISA Procedure 75–1 (40 FR 18471, April 28, 1975). If the exemption is granted the restrictions of section 406(a) and 406 (b)(1) and (b)(2) of the Act and the sanctions resulting from the application of section 4975 of the Code, by reason of section 4975(c)(1) (A) through (E) of the Code shall not apply to: (1) The proposed sale by the Plan of a parcel of improved real property (the Property) located in Salt Lake City, Utah for the greater of $340,000 or the fair market value on the date of the sale to THA Investments (THA), a limited partnership in which the trustee of the Plan owns limited and general partnership interests; and (2) the assignment of a third party lease by the Plan to THA.

Summary of Facts and Representations

1. The Plan is a defined contribution profit sharing plan which has approximately twenty-four (24) participants. As of December 31, 1986, the assets of the Plan totaled approximately $1,559,111. The trustee for the Plan is William C. Vriens, Jr. (Mr. Vriens, Jr.), who is a participant in the Plan, a shareholder of a 48% interest in, and president of Modern Display Service, Inc. (the Employer).

2. The Employer, a Utah corporation which sponsors the Plan, is located at 424 South 7th East, Salt Lake City, Utah. William C. Vriens, Sr. (Mr. Vriens, Sr.) and Heidi Vriens (Mrs. Vriens), wife of Mr. Vriens, Jr., also own shares in the Employer. Mr. Vriens, Sr., a former president of the Employer, is currently a part-time employee of the Employer and a participant in the Plan.

3. Mr. Vriens, Jr. owns an 18.112% limited partnership interest in THA, a Utah limited partnership. He and Mrs. Vriens are also general partners in THA with a three percent (3%) and two percent (2%) interest, respectively. The remaining 76.888% limited partnership interest in THA is held in an irrevocable trust on behalf of each of the seven children of Mr. Vriens, Jr. and Mrs. Vriens.

4. The Property is located at 436 South 7th East, Salt Lake City, Utah, on parcels adjacent to and south of those belonging to the Employer. The Property consists of a front and rear parcel totaling 12,546 square feet. The total area of the front parcel is 9,801 square feet. The 2,745 square foot rear parcel of the Property serves as a parking lot (the Parking Lot). The Property is improved by a single story commercial building (the Building) of approximately 6,036.75 square feet. The Building was constructed in two separate portions. The original front portion was built in 1964 and has a total gross area of approximately 3,978 square feet. The rear portion, added in 1973, contains approximately 2,058.75 square feet. The basement under the front and rear portions of the Building covers an additional area of 5,850 square feet. As of December 31, 1986, the fair market value of the Property and the Building constituted 22.6% of the assets of the Plan.

The Plan originally purchased the Property and the Building from the Employer on December 31, 1973, for a total consideration of $135,000. As part of the financing for the acquisition of the Property, the Plan made a down payment of $20,000, assumed the obligation of $54,063.59 on a real estate contract dated June 1, 1964, payable to John Price Associates, an unrelated third party, and signed an installment contract of sale with the Employer in the amount of $60,936.41. It is represented that the final installment payments on the contracts with the Employer and John Price Associates were made by the Plan on December 4, 1975, and January 1, 1985, respectively.[1] It is represented that no interest was charged to the Plan on the amount payable under the contract to the Employer. Further, the Plan paid no commissions in connection with the acquisition of the Property and the Building.

At the time the Plan acquired the Property, the Building was utilized by the Employer as its principal place of business. By lease (the Old Lease) dated November 1, 1973, and executed January 3, 1974, the Plan rented the entire Building to the Employer. The term of the Old Lease was ten (10) years, renewable for two additional terms of five (5) years each, at a rental rate per month of the greater of $1,500 or two percent (2%) of the gross sales per month of the Employer.[2] On November 1, 1980, the Employer terminated the Old Lease upon completion of construction on a new building (the New Building) on the lot adjacent to the Property and moved the location of his business headquarters to the New Building.

After the Employer's move, during the period between November 1, 1980 to September 7, 1981, the Building was vacant, while the Plan attempted unsuccessfully to find a tenant to occupy the entire space.[3]

On September 7, 1981, the Plan entered into a lease (the Briggs Lease), with an unrelated third party, Jeffrey S. Briggs (Mr. Briggs) d/b/a Designer Textiles. Under the terms of the Briggs Lease, only the front of the Building was let.

[1] The applicants represent that the installment contract of sale on the Property between the Plan and the Employer was exempt from the prohibited transaction provisions of the Act, because it was entered into before July 1, 1974, the date specified in the transitional rules under section 414 and therefore, is covered by the statutory exemption provided by section 414(c)91) of the Act until June 30, 1984. The Department, herein, expresses no opinion as to whether the requirements of section 414(c)(1) of the Act were met.

[2] The applicants represent that the Old Lease between the Plan and the Employer was exempt from the prohibited transaction provisions of the Act, because it was entered into before July 1, 1974, the date specified in the transitional rules under section 414 and therefore, is covered by the statutory exemption provided by section 414(c)(2) of the Act. The Department, herein, expresses no opinion as to whether the Old Lease met the requirements of section 414(c)(2) of the Act.

[3] The applicants represent that they will pay to the Plan compensation, and interest thereon, for the period when the Building was vacant between November 1980 and September 1981.

After October 1982, the Employer recommended use of the Building, consisting in essence of all of the unleased portion of the Building and Property, other than the Parking Lot. The applicants represent that with respect to the Parking Lot on the Property there has been no substantial use by the Employer. The applicants state that the entrance to the Employer's New Building is on the north side, whereas the Parking Lot on the Property is on the south. Further, as a requirement for a building permit on the Employer's New Building, 44 parking stalls were placed on the north side of the north adjacent parcel. It is represented that there is no alley or driveway at the rear of either of the two buildings to connect the separate parking areas.

After October 1982, the area occupied by the Employer in the Building consisted of a total area of 7,908.75 square feet. This included 2,058.75 square feet in the upstairs rear portion of the Building and 5,850 square feet in the basement of the Building. The Employer's use of the rear and the basement of the Building required construction of a doorway between the Employer's New Building and the Plan's Building. All costs of construction were borne by the Employer. Since commencement in 1982 of the use of the rear portion and basement of the Building, the Employer has paid to the Plan an amount equal to $13,100 yearly.[4]

On October 28, 1986, effective August 1, 1986, the Briggs Lease was renewed. The terms for the renewal of the Briggs Lease were at a base monthly rental rate of $3,333 for a term of twelve (12) months. It is represented that Mr. Vriens, Jr. and Mr. Briggs are negotiating another twelve month extension at the same monthly rental rate of the Briggs Lease which expired on August 1, 1987. It is anticipated that any extension of the Briggs Lease will be assigned by the Plans to THA, as part of the transaction for which an exemption is requested.

5. Mr. Vriens, Jr. proposes to sell the Building and the Property to THA for cash in the greater amount of $340,000 or the fair market value of the Property and the Building on the date of sale and to assign any extension of the Briggs Lease to THA. It is represented that the Plan will pay no commissions in connection with the sale and that the Employer or THA will bear all transaction costs. It is represented that the sale of the Property and the Building to THA would eliminate the prohibited use by the Employer and would permit the Employer to expand as needed without any continuing involvement by the Plan. Further, the Plan will benefit from an opportunity to convert an illiquid real estate investment into cash which would allow the Plan considerable latitude in its investment and diversification policy.

6. E.H. Throndsen (Mr. Throndsen), whose business is located at 50 West Broadway, Suite 200, Salt Lake City, Utah, valued the Building and Property at $315,000, as of August 1, 1986. By an addendum (the Addendum) Mr. Throndsen updated the original appraisal (the Original Appraisal) on May 15, 1987, to $340,000. The Addendum addresses the comparable fair market rental rates for the rear and basement portions of the Building.

Based on market rents of comparables in the area, Mr. Throndsen states that the basement should rent as storage for $1.10 per square foot and the rear should rent for $7.50 per square foot, if finished, while a rental rate of $7.50 per square foot for the front of the Building is within the range of from $6.00 to $15.00 for fair market rentals of retail and office space in the area. In a letter dated May 26, 1987, which accompanied the Addendum, Mr. Throndsen stated that the Original Appraisal was completed on the basis of less than market value payments made under the use by the Employer for the rear and basement portions of the Building. Mr. Throndsen states that in reaching a higher valuation in the Addendum, he took into consideration rental rates on finished comparables and the market rental that an owner of the Property and the Building could expect without regard to any existing lease with an affiliated entity.

The Original Appraisal did not consider any special value which the Property may have to Mr. Vriens, Jr. as shareholder of the Employer which owns the adjoining parcel and as the general partner of THA, the proposed purchaser of the Property. With respect to this point, in another letter dated May 26, 1987, Mr. Throndsen states that there would be no added or special value to Mr. Vriens, Jr., because the Property is not needed by the Employer to perform its business and each parcel is distinctly separate with ample parking and storage.

Mr. Throndsen represents that he is independent in that he has no present or contemplated future interest in the Property or bias or personal interest with respect to the parties involved. Mr. Throndsen is qualified to value the Property and the Building, as a member of the American Institute of Real Estate Appraisers, the Society of Real Estate Appraisers, and as an M.A.I. certified appraiser.

7. In summary, the aplicants represent that the proposed transaction will satisfy the statutory criteria of section 408(a) of the Act and section 4975(c)(2) of the Code because: (a) The sale of the Property and the Building to THA will be a one time transaction for cash; (b) the Plan will pay no commissions or transaction costs as a result of the sale; (c) the purchase price to be paid by THA will be determined by a qualified independent appraiser and will be the higher of $340,000 or the fair market value on the date of the sale; (d) the Plan will use the proceeds from the sale to further diversify its portfolio of investments; and (e) the sale of the Property and the Building will terminate the prohibited use of the Property and Building by the Employer.

For Further Information Contact: Angelena C. Le Blanc of the Department, telephone (202) 523-8883. (This is not a toll-free number.)

Brandlin & McAllister, APC Defined Benefit Pension Plan (the Plan) Located in Los Angeles, California

[Application No. D-7426]

Proposed Exemption

The Department is considering granting an exemption under the authority of section 4975(c)(2) of the Code and in accordance with the procedures set forth in ERISA Procedure 75-1 (40 FR 18471, April 28, 1975). If the exemption is granted the sanctions resulting from the application of section 4975 of the Code, by reason of section 4975(c)(1) (A) through (E) of the Code shall not apply to the proposed purchase of certain real property (the Property) by the Plan from J.J Brandlin and Judith G. Brandlin, husband and wife, and disqualified persons with respect to the Plan, provided the Plan pays no more than the fair market value for the Property as of the date of purchase.[5]

Summary of Facts and Representations

1. The Plan is a defined benefit plan with one participant and total assets of

[4] The applicants represent that within 60 days of the date of the grant of this proposed exemption, they will file the Form 5330 with the Internal Revenue Service, and will pay an amount equal to any difference between the fair market rental value of the Building and Property and the sum actually paid to the Plan, plus interest thereon, and any applicable excise tax due on the Employer's use of the Building and the Property for the period after October 1982.

[5] Since J. J. Brandlin is the sole owner of the Brandlin & McAllister, APC (the Employer) and the only participant in the Plan, there is no jurisdiction under Title I of the Act pursuant to 29 CFR 2510.3-3(b). However, there is jurisdiction under Title II of the Act pursuant to section 4975 of the Code.

$1,709,600, as of January 31, 1988. J.J. Brandlin, Esquire (Mr. Brandlin) is the only Plan participant and is the sole owner of the Employer, which is a law firm being terminated. All former participants of the Plan have received their vested and accrued benefits upon termination of employment. The applicant also represents that he, Mr. Brandlin, will be the only participant at risk with respect to the Property and, since the Employer is terminating, there will be no future participants in the Plan.

2. The Property is an 11-unit two-story frame and stucco apartment building with another building in the rear for 11 garage parking spaces and is located at 359 Glasgow Avenue, Inglewood, California. The Property has been appraised, as of February 29, 1988, to have a fair market value of $407,500. The appraisal was conducted by Robert S. Bell, M.A.I. of Redondo Beach, California, an independent appraiser with no interest in the ownership of the Property or affiliation with the Plan or Mr. Brandlin.

3. Mr. Brandlin has offered to sell the Property to the Plan for cash. Neither sales commissions nor fees of any kind will be paid by the Plan to any person in connection with the sale of the Property. The proposed transaction will involve less than 25 percent of the total assets of the Plan. The applicant also represents that the Plan will only lease the Property to persons who are not parties in interest or disqualified persons with respect to the Plan. At no time will Mr. Brandlin and/or members of his family rent or otherwise use the Property.

4. In summary, the applicant represents that the proposed transaction satisfies the statutory criteria of section 4975(C)(2) of the Code because (a) the purchase price of the Property will be less than 25 percent of the total assets of the Plan; (b) the Plan will be paying no more for the Property than the fair market value as determined by a qualified, independent appraiser; (c) Mr. Brandlin is the only participant to be affected by the proposed transaction and he desires that the proposed transaction be consumated.

Notice to Interested Persons: Since Mr. Brandlin is the sole owner of the Employer and the only participant of the Plan, it has been determined that there is on need to distribute the notice of the proposed exemption to interested persons. Comments and requests for a hearing are due 30 days after publication of this notice in the **Federal Register.**

For Further Information Contact: Mr. C.E. Beaver of the Department, telephone (202) 523-8881. (This is not a toll-free number.)

Central Ohio Building and Construction Industry Investment Plan (the Program) Located in Columbus, OH

[Application Nos. D-7435]

Proposed Exemption

The Department is considering granting an exemption under the authority of section 408(a) of the Act and section 4975(c)(2) of the Code and in accordance with the procedures set forth in ERISA Procedure 75-1 (40 FR 18471, April 28, 1975). If the exemption is granted, the restrictions of section 406(a) of the Act and the sanctions resulting from the application of section 4975 of the Code, by reason of section 4975(c)(1) (A) through (D) of the Code shall not apply to the proposed participation by pension plans (the Plans) in construction loans through the Program where such loans are already committed to parties in interest with respect to such Plans by certain lending institutions, provided that the terms of the loans are not less favorable to the Plans than those terms available in transactions with unrelated parties; and provided that the terms and conditions, as described herein are complied with during the operation of the Program.

Summary of Facts and Representations

1. The Plans are pension plans that are co-sponsored by local building and construction industry unions [6] all of which are associated with the Columbus/Central Ohio Building and Construction Trades Council and Contractors affiliated with the Central Ohio Division of the Associated General Contractors of America and/or other employer associations representing building and construction industry employers in Central Ohio area. The Plans are in the process of establishing the Central Ohio Building and Construction Industry Foundation (the Foundation). The following Plans will be part of the Foundation and participate in the Program: Asbestos Workers Local No. 44 Annuity Fund; Bricklayers Local No. 55 Pension Plan; Ohio Carpenters Pension Plan; Cement Masons Local No. 536 Pension Plan; International Brotherhood of Electrical Workers Local No. 683 Pension Plan; Iron Workers. District Council of Southern Ohio and Vicinity Pension Trust; International Brotherhood of Painters and Allied Trades Union and Industry Pension Fund; Plasterers Local No. 800 Pension Plan; Plumbers and Pipe Fitters Local No. 189 Pension Plan; Roofers Local No. 86 Pension Fund; and Sheet Metal Workers Local No. 98 Pension Plan. The jurisdiction covered by the Plans is the Central Ohio area.

2. The Foundation will provide a procedure and system whereby the Plans may invest in construction loans. The Foundation is to be administered by a Board of Trustees (the Trustees). Every Plan participating in the Foundation will name two trustees (one union trustee and one management trustee) to serve on its Board. The Trustees are required and directed by the Foundation Agreement to establish and administer the Program.

3. The Trustees are developing a package of documents for the operation and administration of the Program. The Trustees are also contacting every bank, savings and loan association and insurance company, as defined in Part B of Prohibited Transaction Exemption 76-1 (PTE 76-1, 41 FR 12740, at 12743, March 6, 1976), in the jurisdiction covered by the Foundation, and requesting that such entities allow the Foundation to participate in all construction loans of $200,000 or more in which such lending institutions have made a legally enforceable commitment.[7]

4. All institutions agreeing to participate with the Foundation will agree to: (a) Notify the Trustees (or Administrative Manager) of the Foundation of all applications for construction mortgage loans which have been approved by the institution and consented to be submitted by the borrower; and (b) supply the Trustees with any requested data and information concerning the loans. The applicants represent that all lending institutions will affirmatively recommend that borrowers consent to the submission of the loan documents to the Program. In this regard, the applicants represent that the borrower refusal rate will probably constitute 12 percent to 20 percent of all transactions. Upon receipt of this information from the institutions, the Foundation will notify the trustees or other designated representatives of every participating Plan of all information received by them. The trustees of the participating Plans will then determine whether they intend

[6] All of the local unions are local affiliates of international unions affiliated with the AFL-CIO Building and Construction Trades Department.

[7] Part B of PTE 76-1 provides, in general, exemptive relief from section 406(a) of the Act for construction loans made by a multiple employer plan to a participating employer if, among other requirements, the decision to make the loans is made on behalf of the plan by a bank, savings and loan association or insurance company as described in that exemption.

to participate in a specific construction loan and, if so, the amount of their participation.

5. The Foundation will accumulate the responses received from all of the participating Plans and will then advise the lending institution of the Foundation's desire to participate in a loan and, if so, the amont of the participation. The amount of the participation will be the amount of the aggregate participation by the individual Plans. Each said loan will be deemed and construed to constitute a separate and distinct legal transaction and will be documented as a separate trust. The Foundation will maintain its books and records of account accordingly.

6. Each participating Plan will, within 30 days of its determination and notification of its intention to participate in a specific construction loan, forward the amount of its participation to the lead lending institution. The lead lending institution will keep all such advances productively invested until advances are required to be made to the borrower. The earnings on such advances will be a part of the advance and any excess will be remitted by the institution to the participating Plans.

7. The Foundation will keep proper books and records to account for all advances from participating Plans and all returns of principal and/or interest from the lending institution making the loan. All returns of principal and/or interest by the lending institution for participation in any construction loan will be returned to the trustees of the participating Plan(s) within five days after receipt. Periodically, the Foundation will report to the trustees of the participating Plans and to the affiliated local unions and management associations on its operations. No Foundation Trustee will receive any compensation for his services to the Foundation or the Program. The Foundation may incur reasonable expenses for necessary professional services to implement and operate the Program and may obtain from the lead mortgage lenders and/or the participating Plans reimbursement for reasonable expenses actually incurred. No part of the principal or income of any investment will be received or retained by the Foundation or its Trustees.

8. Because some construction loans may be made to parties in interest with respect to the participating Plans, such as contributing employers, the applicants seek an exemption from section 406(a) of the Act for the transactions. The applicants represent that the Program documents will provide that a trustee of any Plan which has an interest in the employer entity involved in a construction project to be financed by a commitment must: (a) Abstain himself from voting on a participation determination; (b) absent himself from that portion of the Plan trustees' meeting when the issue of the purchase of such participation is under discussion and consideration; and (c) represent on the record that he has not attempted to exert any influence on any trustee regarding the participation. The applicants further represent that, because the Program document will provide that independent plan trustees or other fiduciaries will have sole and exclusive authority with regard to a Plan's decision to participate in a loan, no relief from section 406(b) of the Act for Program transactions is requested.[8]

9. The applicants represent that lending institutions will have made a formal and legally binding commitment to make the construction loan before the opportunity for participation by the Plans is distributed through the Program. The applicants represent that the Foundation will receive from all cooperating lending institutions all qualified loan commitments for consideration whether or not such commitments are for local or non-local developers or construction projects, or union-built or non-union built construction projects. The applicants further represent that the Foundation will not participate in a loan unless it is at or above the prevailing market rate of interest and value for comparable loans.[9] In no event will participationg Plans either individually or in the aggregate acquire more than a 50 percent participation in any one loan.

10. Applicants represent that participating Plans will initially invest together with a lending institution and will not be purchasing participation interests from such lending institution. In addition, the applicants represent that the participating Plans will receive their pro rata share of the points charged by the lending institution to the extent such points represent a return on the loan and not compensation and/or reimbursement to the lending institution for actual expenses incurred and/ or services rendered in servicing the construcion loan. A Plan's pro rata share will be the ratio of the amount of the Plan's funding participation to the total amount of the loan. To the extent the above transactions, or any other transactions between the Plans and the lending institutions, constitute violations of section 406 of the Act, the Department is not proposing relief for such transactions.

11. The applicants represent that, in the event of a default by a borrower, the lead lending institution will have responsibility to enforce the rights of all the lenders, including participation interest holders, under the loan. The applicants further represent that all of the loans subject to the Program will remain in the portfolio of the lead lending institution and thus not be transferred to the other lenders.

12. The applicants represent that before a loan is made, the Foundtion will receive from the lead lender a written commitment for permanent financing from a person other than a Plan which is a member of the Foundation to enable full repayment of

[8] In this exemption, the Department expresses no opinion as to whether transactions involving construction loans to parties in interest will involve transactions as described in section 406(b) of the Act. As well, the Department is not expressing an opinion as to whether the structure, maintenance, and operation of the Program, including the participation with the lending institutions in construction loans to non-parties in interest, will violate provisions of Part 4 of Title I of the Act. The Department notes, as stated in the preamble to Part B of PTE 76-1, *supra* at 12743, that a loan made to a non-party in interest may give rise to a prohibited transaction if, for example, the loan is made in the context of an arrangement for a specific participating employer to furnish a portion of the construction and such employer has a controlling influence over the plan's decision to make the loan.

[9] The Department notes that to the extent the fiduciaries of the participating Plans restrict their consideration of investment opportunities for non-economic reasons, such conduct may involve certain violations of Part 4 of Title I of the Act which violations, if present, would not be provided relief by this exemption.

In this regard, section 404(a)(1) of the Act requires, among other things, that a fiduciary of a plan act prudently, solely in the interest of the plan's participants and beneficiaries, and for the exclusive purpose of providing benefits to participants and beneficiaries. To act prudently, a plan fiduciary must consider, among other factors, the availability, riskiness, and potential return of alternative investments for his plan. Because construction loans are investments which would be selected, if at all, in preference to alternative investments, a loan would not be prudent if it provided a plan with less return, in comparison to risk, than comparable investments available to the plan, or if it involves a greater risk to the security of plan assets than other investments offering a similar return.

The Department has construed the requirements that a fiduciary act solely in the interest of, and for the exclusive purpose of providing benefits to, participants and beneficiaries as prohibiting a fiduciary from subordinating the interests of participants and beneficiaries in their retirement income to unrelated objectives. Thus, in deciding whether and to what extent to invest in consutruction loans, a fiduciary must ordinarily consider only factors relating to the interest of plan participants and beneficiaries in their retirement income. For example, a decision to make a loan may not be influenced by a desire to stimulate the construction industry and generate employment, unless the loan, when judged solely on the basis of its economic value to the plan, would be equal or superior to alternative investments available to the plan (See Advisory Opinion 81-12A, January 13, 1981).

the loan upon completion of construction. In addition, the Foundation will not accept loan participations by any Plan which would, as to any individual loan participation, exceed 10 percent of the assets of the Plan, or in the aggregate with all other construction loan participations, exceed 25 percent of the assets of the Plan. Further, the Foundation will maintain or cause to be maintained for a period of six years from the date of each loan participation such records as are necessary to enable the Department, the Internal Revenue Service, the Plans' participants and beneficiaries, any employer of Plan participants and beneficiaries, or any employee organization whose members are covered by the Plans to determine whether all conditions of the exemption have been met.

13. In summary, the applicants represent that the proposed transactions satisfy the statutory criteria of section 408(a) of the Act because (a) the trustees of each participating Plan will have sole and exclusive authority to cause the Plan to participate in a loan; (b) the lending institutions will have made a legally enforceable commitment to make a construction loan before the Plans consider participation in a loan; and (c) no more than 10 percent of the assets of any participating plan may be invested in any individual loan participation and no more than 25 percent of a plan's assets may be invested in construction loans in the aggregate.

Notice To Interested Persons

Notice of the proposed exemption will be provided to all interested persons within 30 days of the date of publication of the notice of pendency in the **Federal Register**. Such notice will include a copy of the notice of proposed exemption as published in the **Federal Register** and a statement informing interested persons of their right to comment with respect thereto. Comments to the Department are due within 60 days of the date of publication of this notice.

For Further Information Contact: Ms. Jan D. Broady of the Department, telephone (202) 523-8883. (This is not a toll-free number.)

General Information

The attention of interested persons is directed to the following:

(1) The fact that a transaction is the subject of an exemption under section 408(a) of the Act and/or section 4975(c)(2) of the Code does not relieve a fiduciary or other party in interest or disqualified person from certain other provisions of the Act and/or the Code, including any prohibited transaction provisions to which the exemption does not apply and the general fiduciary responsibility provisions of section 404 of the Act, which among other things require a fiduciary to discharge his duties respecting the plan solely in the interest of the participants and beneficiaries of the plan and in a prudent fashion in accordance with section 404(a)(1)(B) of the Act; nor does it affect the requirement of section 401(a) of the Code that the plan must operate for the exclusive benefit of the employees of the employer maintaining the plan and their beneficiaries;

(2) Before an exemption may be granted under section 408(a) of the Act and/or section 4975(c)(2) of the Code, the Department must find that the exemption is administratively feasible, in the interests of the plan and of its participants and beneficiaries and protective of the rights of participants and beneficiaries of the plan; and

(3) The proposed exemptions, if granted, will be supplemental to, and not in derogation of, any other provisions of the Act and/or the Code, including statutory or administrative exemptions and transitional rules. Furthermore, the fact that a transaction is subject to an administrative or statutory exemption is not dispositive of whether the transaction is in fact a prohibited transaction.

(4) The proposed exemptions, if granted, will be subject to the express condition that the material facts and representations contained in each application are true and complete, and that each application accurately describes all material terms of the transaction which is the subject of the exemption.

Signed at Washington, DC, this 31st day of March, 1988.

Robert J. Doyle,

Acting Associate Director, Regulations and Interpretations, Pension and Welfare Benefits Administration, U.S. Department of Labor.

[FR Doc. 88-7449 Filed 4-5-88; 8:45 am]

BILLING CODE 4510-29-M

[Prohibited Transaction Exemption 88-23; Exemption Application No. D-7332 et al.]

Grant of Individual Exemptions; Tupelo Anesthesia Group, P.A. Profit Sharing Plan, et al.

AGENCY: Pension and Welfare Benefits Administration, Labor.

ACTION: Grant of individual exemptions.

SUMMARY: This document contains exemptions issued by the Department of Labor (the Department) from certain of the prohibited transaction restrictions of the Employee Retirement Income Security Act of 1974 (the Act) and/or the Internal Revenue Code of 1954 (the Code).

Notices were published in the **Federal Register** of the pendency before the Department of proposals to grant such exemptions. The notices set forth a summary of facts and representations contained in each application for exemption and referred interested persons to the respective applications for a complete statement of the facts and representations. The applications have been available for public inspection at the Department in Washington, DC. The notices also invited interested persons to submit comments on the requested exemptions to the Department. In addition the notices stated that any interested person might submit a written request that a public hearing be held (where appropriate). The applicants have represented that they have complied with the requirements of the notification to interested persons. No public comments and no requests for a hearing, unless otherwise stated, were received by the Department.

The notices of pendency were issued and the exemptions are being granted solely by the Department because, effective December 31, 1978, section 102 of Reorganization Plan No. 4 of 1978 (43 FR 47713, October 17, 1978) transferred the authority of the Secretary of the Treasury to issue exemptions of the type proposed to the Secretary of Labor.

Statutory Findings

In accordance with section 408(a) of the Act and/or section 4975(c)(2) of the Code and the procedures set forth in ERISA Procedure 75-1 (40 FR 18471, April 28, 1975), and based upon the entire record, the Department makes the following findings:

(a) The exemptions are administratively feasible;

(b) They are in the interests of the plans and their participants and beneficiaries; and

(c) They are protective of the rights of the participants and beneficiaries of the plans.

Tupelo Anethesia Group, P.A. Profit Sharing Plan (the Plan) Located in Tupelo, MS

[Prohibited Transaction Exemption 88-23; Exemption Application No. D-7332]

Exemption

The restrictions of section 406(a) and 406(b)(1) and 406(b)(2) of the Act and the sanctions resulting from the application of section 4975 of the Code, by reason of section 4975(c)(1) (A)

through (E) of the Code, shall not apply to the cash purchase of 196.5 acres of timberland, including the timber thereon, located in Lee County, MS, from H. Read Jones, M.D. by his participant-directed account under the Plan, provided the purchase price does not exceed the fair market value of said timberland and timber on the date of the purchase.

For a more complete statement of the facts and representations supporting the Department's decision to grant this exemption refer to the notice of proposed exemption published on February 22, 1988 at 53 FR 5230.

For Further Information Contact: Mrs. Miriam Freund of the Department, telephone (202) 523-8194. (This is not a toll-free number.)

Erwine's Marine Sales & Services, Inc. Profit Sharing Plan and Trust (the Plan) Located in Frostproof, Florida

[Prohibited Transaction Exemption 88-24; Exemption Application No. D-7360]

Exemption

The restrictions of section 406(a), 406 (b)(1) and (b)(2) of the Act and the sanctions resulting from the application of section 4975 of the Code, by reason of section 4975(c)(1) (A) through (E) of the Code, shall not apply to the proposed sale by the Plan to Erwine's Marine Sales & Service, Inc., the sponsor of the Plan, of a certain parcel of improved real property (the Property), provided that the sales price is no less than the fair market value of the Property on the date of sale.

For a more complete statement of the facts and representations supporting the Department's decision to grant this exemption refer to the notice of proposed exemption published on February 22, 1988 at 53 FR 5230.

For Further Information Contact: Mr. E.F. Williams of the Department, telephone (202) 523-8883. (This is not a toll-free number.)

L & S Anesthesiologist Associates, M.D., P.A., Retirement Plan and Trust (the Plan) Located in Galveston, Texas

[Prohibited Transaction Exemption 88-25; Exemption Application No. D-7366]

Exemption

The sanctions resulting from the application of section 4975 of the Code, by reason of section 4975(c)(1) (A) through (E) of the Code, shall not apply to the cash purchase by the Plan from C.D. Litton, M.D. (Dr. Litton), a party in interest with respect to the Plan, of a 640-acre tract (the Property) located in Edwards County, Texas, provided the purchase price does not exceed the Property's fair market value as of the date of the purchase.

Because Dr. Litton is the sole owner of the sponsor of the Plan and the sole participant in the Plan, the Plan is subject to the provisions of Title II of the Act only and is not subject to Title I (see 29 CFR 2510.3-3 (b) and (c)).

For a more complete statement of the facts and representations supporting the Department's decision to grant this exemption refer to the notice of proposed exemption published on February 22, 1988 at 53 FR 5231.

For Further Information Contact: Mrs. Miriam Freund of the Department, telephone (202) 523-8194. (This is not a toll-free number.)

General Information

The attention of interested persons is directed to the following:

(1) The fact that a transaction is the subject of an exemption under section 408(a) of the Act and/or section 4975(c)(2) of the Code does not relieve a fiduciary or other party in interest or disqualified person from certain other provisions of the Act and/or the Code, including any prohibited transaction provisions to which the exemption does not apply and the general fiduciary responsibility provisions of section 404 of the Act, which among other things require a fiduciary to discharge his duties respecting the plan solely in the interest of the participants and beneficiaries of the plan and in a prudent fashion in accordance with section 404(a)(1)(B) of the Act; nor does it affect the requirement of section 401(a) of the Code that the plan must operate for the exclusive benefit of the employees of the employer maintaining the plan and their beneficiaries;

(2) These exemptions are supplemental to and not in derogation of, any other provisions of the Act and/or the Code, including statutory or administrative exemptions and transitional rules. Furthermore, the fact that a transaction is subject to an administrative or statutory exemption is not dispositive of whether the transaction is in fact a prohibited transaction.

(3) The availability of these exemptions is subject to the express condition that the material facts and representations contained in each application accurately describes all material terms of the transaction which is the subject of the exemption.

Signed at Washington, DC, this 31st day of March, 1988.

Robert J. Doyle,

Acting Associate Director for Regulations and Interpretations, Pension and Welfare Benefits Administration, U.S. Department of Labor.

[FR Doc. 88-7450; Filed 4-5-88; 8:45 am]

BILLING CODE 4510-29-M

NATIONAL FOUNDATION ON THE ARTS AND THE HUMANITIES

Music Advisory Panel; Meeting

Pursuant to section 10(a)(2) of the Federal Advisory Committee Act (Pub. L. 92-463), as amended, notice is hereby given that a meeting of the Music Advisory Panel (Solo Recitalists Fellowships Section) to the National Council on the Arts will be held on April 21, 1988 from 9:00 a.m.-5:30 p.m., and on April 22, 1988 from 9:00 a.m.-5:00 p.m. in room 730 of the Nancy Hanks Center, 1100 Pennsylvania Avenue, NW., Washington, DC 20506.

A portion of this meeting will be open to the public on April 22, 1988, from 3:00 p.m.-5:00 p.m. for a general program overview and guidelines discussion.

The remaining sessions of this meeting on April 21, 1988 from 9:00 a.m.-5:30 p.m., and on April 22, 1988 from 9:00 a.m.-3:00 p.m. are for the purpose of Panel review, discussion, evaluation and recommendation on applications for financial assistance under the National Foundation on the Arts and the Humanities Act of 1965, as amended, including information given in confidence to the agency by grant applicants. In accordance with the determination of the Chairman published in the **Federal Register** of February 13, 1980, these sessions will be closed to the public pursuant to subsection (c)(4), (6) and (9)(b) of section 552b of Title 5, United States Code.

If you need special accommodations due to a disability, please contact the Office for Special Constituencies, National Endowment for the Arts, 1100 Pennsylvania Avenue, NW., Washington, DC 20506, 202/682-5532, TTY 202/682-5496 at least seven (7) days prior to the meeting.

Further information with reference to this meeting can be obtained from Ms. Yvonne M. Sabine, Advisory Committee Management Officer, National Endowment for the Arts, Washington, DC 20506, or call 202/682-5433.

March 29, 1988.

Yvonne Sabine,

Acting Director, Council and Panel Operations, National Endowment for the Arts.

[FR Doc. 88-7493 Filed 4-5-88; 8:45 am]

BILLING CODE 7537-01-M

NUCLEAR REGULATORY COMMISSION

[Docket No. 50-409]

Dairyland Power Cooperative; Environmental Assessment and Finding of No Significant Impact

The U.S. Nuclear Regulatory Commission (the Commission) is considering issuance of an amendment to Provisional License No. DPR-45, issued to Dairyland Power Cooperative (the licensee) for the La Crosse Boiling Water Reactor (LACBWR), located in Vernon County, Wisconsin.

Environmental Assessment

Identification of Proposed Action

The proposed amendment would revise the Technical Specifications (TS) to reduce the required crew size.

LACBWR was permanently shutdown on April 30, 1987 and reactor defueling completed on June 11, 1987. The LACBWR Operating License No. DPR-45 was modified to possess-but-not-operate status on August 4, 1987.

Need for Proposed Action

The amendment is needed to reduce crew size requirements that were appropriate for an operating plant but not at the permanently shutdown LACBWR facility.

Environmental Impact of the Proposed Action

The proposed action will have no environmental impact because with the reactor permanently shutdown our accident analysis shows that potential offsite exposures are reduced to less than protective action guide levels. The reduced crew size would be adequate to respond to these potential accidents and there can be no reactor accident since all fuel has been removed from the reactor and placed in the Fuel Element Storage Well. This staff has also determined that the amendment involves no increase in the amounts, and no significant change in the types of any effluents that may be released offsite and that there would be no increase in individual or cumulative occupational radiation exposures.

Alternative Use of Resources

This action does not involve the use of resources.

Agencies and Persons Consulted

The licensee initiated this amendment action. The NRC staff has reviewed their request. No other agencies or persons were consulted.

Finding of No Significant Impact

The Commission has determined not to prepare an environmental impact statement for the proposed amendment.

Based upon the foregoing environmental assessment, we conclude that the proposed action will not have a significant effect on the quality of the human environment.

For further details with respect to this action, see the licensee's application dated November 12, 1987 as revised January 29, 1988, which is available for public inspection at the Commission's Public Document Room, 1717 H Street, NW., Washington, DC 20555 and at the La Crosse Public Library, 800 Main Street, La Crosse, Wisconsin 54601.

Dated at Rockville, Maryland this 31 day of March 1988.

For The Nuclear Regulatory Commission.

Peter B. Erickson,

Project Manager, Standardization and Non-Power Reactor Project Directorate, Division of Reactor Projects-III, IV, V and Special Projects, Office of Nuclear Reactor Regulation.

[FR Doc. 88-7522 Filed 4-5-88; 8:45 am]

BILLING CODE 7590-01-M

Biweekly Notice Applications and Amendments to Operating Licenses Involving No Significant Hazards Considerations

I. Background

Pursuant to Public Law (Pub. L.) 97-415, the Nuclear Regulatory Commission (the Commission) is publishing this regular biweekly notice. Pub. L. 97-415 revised section 189 of the Atomic Energy Act of 1954, as amended (the Act), to require the Commission to publish notice of any amendments issued, or proposed to be issued, under a new provision of section 189 of the Act. This provision grants the Commission the authority to issue and make immediately effective any amendment to an operating license upon a determination by the Commission that such amendment involves no significant hazards consideration, notwithstanding the pendency before the Commission of a request for a hearing from any person.

This biweekly notice includes all notices of amendments issued, or proposed to be issued from March 14, 1988 through March 25, 1988. The last biweekly notice was published on March 23, 1988 (53 FR 9498).

NOTICE OF CONSIDERATION OF ISSUANCE OF AMENDMENT TO FACILITY OPERATING LICENSE AND PROPOSED NO SIGNIFICANT HAZARDS CONSIDERATION DETERMINATION AND OPPORTUNITY FOR HEARING

The Commission has made a proposed determination that the following amendment requests involve no significant hazards consideration. Under the Commission's regulations in 10 CFR 50.92, this means that operation of the facility in accordance with the proposed amendments would not (1) involve a significant increase in the probability or consequences of an accident previously evaluated; or (2) create the possibility of a new or different kind of accident from any accident previously evaluated; or (3) involve a significant reduction in a margin of safety. The basis for this proposed determination for each amendment request is shown below.

The Commission is seeking public comments on this proposed determination. Any comments received within 30 days after the date of publication of this notice will be considered in making any final determination. The Commission will not normally make a final determination unless it receives a request for a hearing.

Written comments may be submitted by mail to the Rules and Procedures Branch, Division of Rules and Records, Office of Administration and Resource Management, U.S. Nuclear Regulatory Commission, Washington, DC 20555, and should cite the publication date and page number of this **Federal Register** notice. Written comments may also be delivered to Room 4000, Maryland National Bank Building, 7735 Old Georgetown Road, Bethesda, Maryland from 8:15 a.m. to 5:00 p.m. Copies of written comments received may be examined at the NRC Public Document Room, 1717 H Street, NW., Washington, DC. The filing of requests for hearing and petitions for leave to intervene is discussed below.

By May 6, 1988, the licensee may file a request for a hearing with respect to issuance of the amendment to the subject facility operating license and any person whose interest may be affected by this proceeding and who wishes to participate as a party in the proceeding must file a written petition for leave to intervene. Requests for a hearing and petitions for leave to

intervene shall be filed in accordance with the Commission's "Rules of Practice for Domestic Licensing Proceedings" in 10 CFR Part 2. If a request for a hearing or petition for leave to intervene is filed by the above date, the Commission or an Atomic Safety and Licensing Board, designated by the Commission or by the Chairman of the Atomic Safety and Licensing Board Panel, will rule on the request and/or petition and the Secretary or the designated Atomic Safety and Licensing Board will issue a notice of hearing or an appropriate order.

As required by 10 CFR 2.714, a petition for leave to intervene shall set forth with particularity the interest of the petitioner in the proceeding, and how that interest may be affected by the results of the proceeding. The petition should specifically explain the reasons why intervention should be permitted with particular reference to the following factors: (1) The nature of the petitioner's right under the Act to be made a party to the proceeding; (2) the nature and extent of the petitioner's property, financial, or other interest in the proceeding; and (3) the possible effect of any order which may be entered in the proceeding on the petitioner's interest. The petition should also identify the specific aspect(s) of the subject matter of the proceeding as to which petitioner wishes to intervene. Any person who has filed a petition for leave to intervene or who has been admitted as a party may amend the petition without requesting leave of the Board up to fifteen (15) days prior to the first prehearing conference scheduled in the proceeding, but such an amended petition must satisfy the specificity requirements described above.

Not later than fifteen (15) days prior to the first prehearing conference scheduled in the proceeding, a petitioner shall file a supplement to the petition to intervene which must include a list of the contentions which are sought to be litigated in the matter, and the bases for each contention set forth with reasonable specificity. Contentions shall be limited to matters within the scope of the amendment under consideration. A petitioner who fails to file such a supplement which satisfies these requirements with respect to at least one contention will not be permitted to participate as a party.

Those permitted to intervene become parties to the proceeding, subject to any limitations in the order granting leave to intervene, and have the opportunity to participate fully in the conduct of the hearing, including the opportunity to present evidence and cross-examine witnesses.

If a hearing is requested, the Commission will make a final determination on the issue of no significant hazards consideration. The final determination will serve to decide when the hearing is held.

If the final determination is that the amendment request involves no significant hazards consideration, the Commission may issue the amendment and make it immediately effective, notwithstanding the request for a hearing. Any hearing held would take place after issuance of the amendment.

If the final determination is that the amendment involves a significant hazards consideration, any hearing held would take place before the issuance of any amendment.

Normally, the Commission will not issue the amendment until the expiration of the 30-day notice period. However, should circumstances change during the notice period such that failure to act in a timely way would result, for example, in derating or shutdown of the facility, the Commission may issue the license amendment before the expiration of the 30-day notice period, provided that its final determination is that the amendment involves no significant hazards consideration. The final determination will consider all public and State comments received before action is taken. Should the Commission take this action, it will publish a notice of issuance and provide for opportunity for a hearing after issuance. The Commission expects that the need to take this action will occur very infrequently.

A request for a hearing or a petition for leave to intervene must be filed with the Secretary of the Commission, U.S. Nuclear Regulatory Commission, Washington, DC 20555, Attention: Docketing and Service Branch, or may be delivered to the Commission's Public Document Room, 1717 H Street, NW., Washington, DC, by the above date. Where petitions are filed during the last ten (10) days of the notice period, it is requested that the petitioner promptly so inform the Commission by a toll-free telephone call to Western Union at (800) 325-6000 (in Missouri (800) 342-6700). The Western Union operator should be given Datagram Identification Number 3737 and the following message addressed to *(Project Director)*: petitioner's name and telephone number; date petition was mailed; plant name; and publication date and page number of this **Federal Register** notice. A copy of the petition should also be sent to the Office of the General Counsel-White Flint, U.S. Nuclear Regulatory Commission, Washington, DC 20555, and to the attorney for the licensee.

Nontimely filings of petitions for leave to intervene, amended petitions, supplemental petitions and/or requests for hearing will not be entertained absent a determination by the Commission, the presiding officer or the presiding Atomic Safety and Licensing Board, that the petition and/or request should be granted based upon a balancing of factors specified in 10 CFR 2.714(a)(1) (i)-(v) and 2.714(d).

For further details with respect to this action, see the application for amendment which is available for public inspection at the Commission's Public Document Room, 1717 H Street, NW., Washington, DC, and at the local public document room for the particular facility involved.

Alabama Power Company, Docket Nos. 50-348 and 50-364, Joseph M. Farley Nuclear Plant, Units 1 and 2, Houston County, Alabama

Date of amendments request: December 2, 1986, September 16, 1987 and November 17, 1987.

Brief description of amendments: In accordance with the requirements of 10 CFR 73.55, the licensee has submitted a proposed amendment to the Physical Security Plan for the Joseph M. Farley Nuclear Plant, Units 1 and 2, to reflect recent changes to that regulation. The proposed amendment would change paragraphs 2.D of Facility Operating License No. NPF-2 and Facility Operating License No. NPF-8 to require compliance with the revised plans.

Basis for proposed no significant hazards consideration determination: On August 4, 1986 (51 FR 27817 and 27822), the Nuclear Regulatory Commission amended Part 73 of its regulations, "Physical Protection of Plants and Materials," to clarify plant security requirements to afford an increased assurance of plant safety. The amended regulations required that each nuclear reactor power licensee submit proposed amendments to its security plan to implement the revised provisions of 10 CFR 73.55. The licensee submitted its revised plan on December 2, 1986, September 16, 1987, and November 17, 1987 to satisfy the requirements of the amended regulations. The Commission proposes to amend the licenses to reference the revised plan.

In the supplementary materials accompanying the amended regulations the Commission indicated that it was amending its regulations "to provide a more safety conscious safeguards

system while maintaining the current levels of protection" and that the "Commission believes that the clarification and refinement of requirements as reflected in these amendments is [sic] appropriate because they afford an increased assurance of plant safety."

The Commission has provided guidance concerning the application of the criteria for determining whether or not a no significant hazards consideration exists by providing certain examples of actions not likely to involve significant hazards considerations ard examples of actions likely to involve significant hazards considerations (51 FR 7750). One of the examples of actions not likely to involve significant hazards considerations is example (vii) "a change to conform a license to changes in the regulations, where the license change results in very minor changes to facility operations clearly in keeping with the regulations." The changes in this case fall within the scope of the example. For the foregoing reasons, the Commission proposes to determine that the proposed amendment involves no significant hazards consideration.

Local Public Document Room location: George S. Houston Memorial Library, 212 W. Burdeshaw Street, Dothan, Alabama 36303.

Attorney for licensee: Ernest L. Blake, Esquire, 2300 N Street, NW., Washington, DC 20037.

NRC Project Director: Elinor G. Adensam.

Arizona Public Service Company et al., Docket Nos. STN 50-528, STN 50-529 and STN 50-530, Palo Verde Nuclear Generating Station (PVNGS), Units 1, 2 and 3 Maricopa County, Arizona

Date of amendment request: November 21, 1986, as supplemented by letter dated December 7, 1987.

Description of amendment request: In accordance with the requirements of 10 CFR 73.55, the licensees submitted an amendment to the Physical Security Plan for the Palo Verde Nuclear Generating Station, Units 1, 2 and 3 to reflect recent changes to that regulation. The proposed license amendments would modify paragraph 2.E of Facility Operating License Nos. NPF-41, NPF-51 and NPF-74 for these units to require compliance with the revised Plan.

Basis for proposed no significant hazards consideration determination: On August 4, 1986 (51 FR 27817 and 27822), the Nuclear Regulatory Commission amended Part 73 of its regulations, "Physical Protection of Plants and Materials," to clarify plant security requirements to afford an increased assurance of plant safety. The amended regulations required that each nuclear power reactor licensee sumit proposed amendments to its security plan to implement the revised provisions of 10 CFR 73.55. The licensees submitted a revised Plan on November 21, 1986 and December 7, 1987, to satisfy the requirements of the amended regulations. The Commission proposes to amend the licenses to reference the revised Plan.

In the Supplementary Material accompanying the amended regulations, the Commission indicated that it was amending its regulations "to provide a more safety conscious safeguards system while maintaining the current levels of protection" and that the "Commission believes that the clarification and refinement of requirements as reflected in these amendments is appropriate because they afford an increased assurance of plant safety."

The Commission has provided guidance concerning the application of the criteria for determining whether a significant hazards consideration exists by providing certain examples of actions involving no significant hazards considerations (51 FR 7751). One of these examples is example (vii): "A change to conform a license to changes in the regulations, where the license change results in very minor changes to facility operations clearly in keeping with the regulations." The changes in this case fall within the scope of the example.

For the foregoing reasons, the Commission proposes to determine that the proposed amendments involve no significant hazards consideration.

Local Public Document Room location: Phoenix Public Library, Business and Science Division, 12 East McDowell Road, Phoenix, Arizona 85004.

Attorney for licensees: Mr. Arthur C. Gehr, Snell & Wilmer, 3100 Valley Center, Phoenix, Arizona 85007.

NRC Project Director: George W. Knighton.

Arizona Public Service Company et al., Docket Nos. STN 50-528, STN 50-529, and STN 50-530, Palo Verde Nuclear Generating Station (PVNGS), Units 1, 2 and 3, Maricopa County, Arizona

Date of amendment request: February 26, 1988.

Description of amendment request: The proposed amendment consists of a proposed change to the Technical Specifications (Appendix A to Facility Operating License Nos. NPF-41, NPF-51, and NPF-74 for PVNGS, Units 1, 2 and 3 respectively). The proposed change would replace the Action statement of Technical Specification Table 3.3-1 section I.B,2a, Startup Logarithmic Power Level-High Channels. Presently the Action statement referenced is No. 8; the proposed change would replace the Action statement with statements Nos. 2 and 3.

Table 3.3-1 currently requires that with less than 3 log channel detectors operating, an inoperable channel must be restored to Operable status within 48 hours or an affected reactor trip breaker must be opened within the next hour (Action No. 8). However, the licensees state that the log power bistables input into the RPS matrix logic and are not assigned in any particular reactor trip breaker; therefore determining which reactor trip breaker is the affected one becomes difficult. Also, if the operator were to perform Action No. 8 when 1 less than the minimum operable log channels are operable the result would be that a 2 out of 2 trip logic would occur. By changing the action statement to Actions #2 and #3, which requires 1 channel to be bypassed and one tripped thus establishing a 1 out of 2 trip logic, this logic would be consistent with other similar RPS input parameters.

Basis for proposed no significant hazards consideration determination: The Commission has provided standards for determining whether a significant hazards consideration exists as stated in 10 CFR 50.92. A proposed amendment to an operating license for a facility involves no significant hazards considerations if operation of the facility in accordance with a proposed amendment would not: (1) Involve a significant increase in the probability or consequences of an accident previously evaluated; (2) Create the possibility of a new or different kind of accident from any accident previously evaluated; or (3) Involve a significant reduction in a margin of safety.

The licensees have provided a discussion of the proposed change as it relates to these standards; the discussion is presented below.

Standard 1—Involve a Significant Increase in the Probability or Consequences of an Accident Previously Evaluated

The proposed change does not involve a significant increase in the probability or consequences of an accident previously evaluated. The proposed change only modifies an existing action statement. The proposed change does not modify or replace equipment or components important to safety. Therefore the current safety analyses remain bounding. Thus, the probabilities

or consequences of an accident previously evaluated will not significantly increase.

Standard 2—Create the Possibility of a New or Different Kind of Accident From Any Accident Previously Evaluated

The proposed amendment will not create the possibility of a new or different kind of accident from any accident previously evaluated. Changing the action statement to the more appropriate actions of #2 and #3 would establish a 1 out of 2 trip logic and would be consistent with the assumptions of the safety analysis and therefore not create the possibility of a new or different kind of accident from any accident previously evaluated.

Standard 3—Involve a Significant Reduction in a Margin of Safety

The proposed change does not involve a significant reduction in a margin of safety because it does not affect the design basis of the plant. The trip setpoints for the log channel detectors have not been changed. Changing the action statement to establish a 1 out of 2 trip logic when one less than the minimum operable log channels are operable would be consistent with the current safety analyses. Therefore the appropriate safety margins are maintained. Thus the proposed change does not involve a significant reduction in a margin of safety.

The staff has reviewed the licensees' no significant hazards consideration determination and agrees with the licensees' analysis.

Accordingly, the Commission has proposed to determine that the above change does not involve a significant hazards consideration.

Local Public Document Room location: Phoenix Public Library, Business and Science Division, 12 East McDowell Road, Phoenix, Arizona 85004.

Attorney for licensees: Mr. Arthur C. Gehr, Snell & Wilmer, 3100 Valley Center, Phoenix, Arizona 85007.

NRC Project Director: George W. Knighton.

Arizona Public Service Company et al., Docket No. STN 50-528, Palo Verde Nuclear Generating Station (PVNGS), Unit 1, Maricopa County, Arizona

Date of amendment request: March 2, 1988.

Description of amendment request: The proposed amendment would include a new license condition to implement an augmented vibration monitoring program for the reactor coolant pump shafts to be consistent with the licensees' written commitments for these pumps.

Basis for Proposed No Significant Hazards Consideration Determination: The Commission has provided guidance for determining whether a proposed amendment to an operating license for a facility involves a significant hazards consideration and has provided examples of amendments that are not likely to involve a significant hazards consideration (51 FR 7751). Example (ii) in 51 FR 7751 is as follows: (ii) A change that constitutes an additional limitation, restriction or control not presently included in the technical specifications: for example, a more stringent surveillance requirement. The staff considers the proposed amendment to be similiar to example (ii) since it would impose additional monitoring requirements on the reactor coolant pump shafts.

Accordingly, the Commission has proposed to determine that the above change does not involve a significant hazards consideration.

Local Public Document Room location: Phoenix Public Library, Business and Science Division, 12 East McDowell Road, Phoenix, Arizona 85004.

Attorney for licensees: Mr. Arthur C. Gehr, Snell & Wilmer, 3100 Valley Center, Phoenix, Arizona 85007.

NRC Project Director: George W. Knighton.

Arizona Public Service Company et al., Docket No. STN 50-530, Palo Verde Nuclear Generating Station (PVNGS), Unit No. 3, Maricopa County, Arizona

Date of Amendment Request: March 1, 1988.

Description of Amendment Request: The proposed amendment would modify the Technical Specifications (Appendix A to Facility Operating License No. NPF-74, for PVNGS, Unit 3), to revise Surveillance Pequirement 4.7.9.b. This Surveillance Requirement relates to the visual inspection program for various snubbers, whose function is to ensure the structural integrity of the reactor coolant system and all other safety related systems during and following a seismic event or another event which would initiate dynamic loads. The requested amendment would postpone the initial inservice inspection of all inaccessible snubbers in Unit 3 until the first refueling outage (approximately a 6 month delay).

Basis for Proposed No Significant Hazards Consideration Determination: The Commission has provided standards for determining whether a significant hazards consideration exists as stated in 10 CFR 50.92. A proposed amendment to an operating license for a facility involves no significant hazards considerations if operation of the facility in accordance with a proposed amendment would not: (1) Involve a significant increase in the probability or consequences of an accident previously evaluated; (2) Create the possibility of a new or different kind of accident from any accident previously evaluated; or (3) Involve a significant reduction in a margin of safety.

The licensees have provided a discussion of the proposed change as it relates to these standards; the discussion is presented below.

Standard 1—Involve a Significant Increase in the Probability or Consequences of an Accident Previously Evaluated

The proposed change requests a delay of approximately 6 months in performing the initial inservice visual inspection for all inaccessible snubbers. The inaccessible snubbers that are the subject of this amendment request function to ensure the structural integrity of the RCS and several other safety related systems during seismic events or other events initiating dynamic loads on the systems. The events that initiate seismic occurrences or other transients are independent of the frequency of performing snubber visual inspections. The inaccessible snubbers help to ensure that the consequences of previously evaluated accidents are not increased by ensuring the structural integrity of safety related systems. The proper operation of these snubbers is assured by the following considerations: (i) The relatively short time frame involved with this amendment request, (ii) the successful completion of previous inspections of this type on Units 1 and 2, and (iii) a portion of these snubbers are in an inactive portion of the containment spray system. Thus, the proposed change will not increase the probability or the consequences of previously evaluated accidents.

Standard 2—Create the Possibility of a New or Different Kind of Accident From any Accident Previously Evaluated

The proposed change will not create the possibility of a new or different kind of accident from any accident previously analyzed. Proper operation of the inaccessible snubbers during seismic or transient events helps to ensure the structural integrity of the RCS and other safety related systems. No new or different types of accidents are created by this proposed change since the snubbers will operate as intended which

will help to ensure that the associated mechanical systems perform as originally intended.

Standard 3—Involve a Significant Reduction in a Margin of Safety

The proposed change does not involve a significant reduction in a margin of safety because it does not affect the design basis of the plant. The bases section for Technical Specification 3.7.9 states that the purpose of the snubbers is to ensure the structural integrity of the RCS and all other safety related systems during and following a seismic event or another event initiating dynamic loads. Based upon the successful completion of previous inspections of this type on Units 1 and 2, there is adequate assurance that the inaccessible snubbers in Unit 3 will perform as required to ensure the structural integrity of the RCS and other safety related systems.

The staff has reviewed the licensees' no significant hazards consideration determination and agrees with the licensees' analysis.

Accordingly, the Commission has proposed to determine that the above change does not involve a significant hazards consideration.

Local Public Document Room location: Phoenix Public Library, Business and Science Division, 12 East McDowell Road, Phoenix, Arizona 85004.

Attorney for licensees: Mr. Arthur C. Gehr, Snell & Wilmer, 3100 Valley Center, Phoenix, Arizona 85007.

NRC Project Director: George W. Knighton.

Boston Edison Company, Docket No. 50-293, Pilgrim, Nuclear Power Station, Plymouth, Massachusetts

Date of amendment request: May 20, 1987.

Description of amendment request: The amendment would revise the Technical Specifications (TS) to reduce the testing (frequency) requirements of the Anticipated Transients Without Scram (ATWS) Reactor Pump Trip/Automatic Rod Injection from (RPT/ARI) not less than one month nor more than three months surveillance test interval to once/cycle. The new surveillance frequency is consistent with industry practice and the Pilgrim TS for other analog transmitters.

Basis for proposed no significant hazards consideration determination: The Commission has provided standards for determining whether a significant hazards determination exists as stated in 10 CFR 50.92(c). A proposed amendment to an operating license involves no significant hazards considerations if operation of the facility in accordance with the proposed amendment would not: (1) Involve a significant increase in the probability or consequences of an accident previously evaluated, or (2) create the possibility of a new or different kind of accident from any accident previously evaluated, or (3) involve a significant reduction in a margin of safety.

The licensee has evaluated the proposed amendment against the standards in 10 CFR 50.92 and has determined the following:

1. Operating Pilgrim Station in accordance with the proposed amendment will not involve a significant increase in the probability or consequences of an accident previously evaluated.

The proposed amendment will not involve a significant increase in the probability or consequences of an accident previously evaluated because the availability, accuracy and reliability of the analog transmitters identified on Table 4.2.G are not reduced by this change. In fact, overall availability is enhanced because the injection of a simulated signal into the transmitter requires that it be isolated during power operation, reducing its availability to perform its designed function. Isolation also creates a higher risk of spurious scram. Compliance with the existing requirement does not enhance safety because, as detailed in NEDO 21617-A, the type of transmitter being surveilled is subject to constant cross-checking by comparison of its output currents against other transmitters in the system. This provides a means to determine if a transmitter is malfunctioning without periodically isolating it and injecting a simulated signal into it. A gross failure immediately activates an annunciator in the control room. Minor "drifting" is detected by the daily instrument checks required by Technical Specification Table 4.2.G.

These constant checks, along with the proven reliability of the transmitters, is reflected by the once/cycle calibration of transmitters found in the calibration column of Table 4.2.G. Therefore this change will not involve a significant increase in probability or consequences of a previously evaluated accident.

2. Operating Pilgrim Station in accordance with the proposed amendment will not create the possibility of a new or different kind of accident from any accident previously evaluated.

The proposed amendment does not create a new or different kind of accident from any previously evaluated because the ATWS RPT/ARI was designed and installed as backup to other Reactor Protection Systems (RPS) signals. The instrumentation is intended to function in transients not covered by the primary Control Rod (CR) insertion signals; therefore the instruments enhance safety. The change does not create new or different accident scenarios; in fact, the change is beneficial because isolating the analog transmitters to perform the currently required surveillance reduces the availability of the ATWS RPT/ARI to perform its designated function, and increases the potential for spurious scram.

The reliability of these instruments, coupled with the required daily check and constant alarmed monitoring ensure that the accuracy, availability and reliability of the transmitters will be unchanged by the proposed amendment. Therefore this proposed change does not create the possibility of a new or different kind of accident from any previously evaluated.

3. Operating Pilgrim Station in accordance with the proposed amendment will not involve a significant reduction in a margin of safety.

The proposed amendment does not involve a significant reduction in a margin of safety. The only potential impact on the margin of safety involved in this proposal is associated with the reliability, accuracy and availability of the transmitter. As discussed in (1) and (2) above, the change will improve instrument reliability, accuracy and availability, therefore:

(a) Monthly testing of the transmitters will not increase reliability. Industry experience and recommendations indicate the reliability of the transmitters can be assured by testing once/refueling. This is reflected in the once/operating cycle calibration for the other transmitters included in Table 4.2.G.

(b) Monthly testing will not improve the ability to detect instrument malfunctions because the accuracy of the instrument is detectable on a daily basis. Gross failure or deviation is immediately identified through a control room alarm. Since a loss of accuracy has a direct impact on the confidence level assigned to relying on an instrument to assure previously identified safety margin, and since transmitter accuracy is in this case verified by constant cross checking, a high level of confidence in the transmitter's accuracy can be assumed because deviation will be quickly detected and corrected; therefore the component of the safety margin reliant on transmitter accuracy can also be assured.

(c) The proposed amendment actually improves transmitter availability because the transmitter would not need to be isolated during normal operations to allow a simulated signal to be injected into it.

The NRC staff has reviewed the licensee's no significant hazards consideration determination and agrees with the licensee's analysis. Based on this review, the staff therefore proposes to determine that the requested amendment does not involve a significant hazards consideration.

Local Public Document Room location: Plymouth Public Library, 11 North Street, Plymouth, Massachusetts 02360.

Attorney for licensee: W.S. Stowe, Esq., Boston Edison Company, 800 Boylston Street, 36th Floor, Boston, Massachusetts 02199.

NRC Project Director: Richard Wessman, Director.

Carolina Power & Light Company et al., Docket Nos. 50-325 and 50-324, Brunswick Steam Electric Plant, Units 1 and 2, Brunswick County, North Carolina

Dates of application for amendments: November 26, 1986 and September 23, 1987.

Brief description of amendments: In accordance with the requirements of 10 CFR 73.55, the licensee has submitted a proposed amendment to the Physical Security Plan for the Brunswick Steam Electric Plant, Units 1 and 2, to reflect recent changes to that regulation. The proposed amendment would delete paragraphs 2.D(1), 2.D(2) and 2.D(3) of Facility Operating License No. DPR-71 and add a new license condition as paragraph 2.D(1); and it would also delete paragraphs 2.C(6), 2.C(7) and 2.C(8) of Facility Operating License No. DPR-62 and add a new license condition as paragraph 2.C(6) to require compliance with the revised plans.

Basis for proposed no significant hazards consideration determination: On August 4, 1986 (51 FR 27817 and 27822), the Nuclear Regulatory Commission amended Part 73 of its regulations, "Physical Protection of Plants and Materials," to clarify plant security requirements to afford an increased assurance of plant safety. The amended regulations required that each nuclear power licensee submit proposed amendments in its security plan to implement the revised provisions of 10 CFR 73.55. The licensee submitted its revised plan on November 26, 1986 and September 23, 1987, to satisfy the requirements of the amended regulations. The Commission proposes to amend the licenses to reference the revised plan.

In the supplementary materials accompanying the amended regulations the Commission indicated that it was amending its regulations "to provide a more safety conscious safeguards system while maintaining the current levels of protection" and that the "Commission believes that the clarification and refinement of requirements as reflected in these amendments is [sic] appropriate because they afford an increased assurance of plant safety."

The Commission has provided guidance concerning the application of the criteria for determining whether or not a no significant hazards consideration exists by providing certain examples of actions not likely to involve significant hazards considerations and examples of actions likely to involve significant hazards considerations (51 FR 7750). One of the examples of actions not likely to involve significant hazards considerations is example (vii) "a change to conform a license to changes in the regulations, where the license change results in very minor changes to facility operations clearly in keeping with the regulations." The changes in this case fall within the scope of the example. For the foregoing reasons, the Commission proposes to determine that the proposed amendment involves no significant hazards consideration.

Local Public Document Room location: University of North Carolina at Wilmington, William Madison Randall Library, 601 S. College Road, Wilmington, North Carolina 28403-3297.

Attorney for licensee: R.E. Jones, General Counsel, Carolina Power & Light Company, P.O. Box 1551, Raleigh, North Carolina 27602.

NRC Project Director: Elinor G. Adensam.

Carolina Power & Light Company, North Carolina Eastern Municipal Power Agency, Docket No. 50-400, Shearon Harris Nuclear Power Plant, Unit 1, Wake and Chatham Counties, North Carolina

Date of amendment request: November 26, 1986 and September 23, 1987.

Brief description of amendments: In accordance with the requirements of 10 CFR 73.55, the licensee has submitted a proposed amendment to the Physical Security Plan for the Shearon Harris Nuclear Power Plant, Units 1, to reflect recent changes to that regulation. The proposed amendment would change paragraph 2.E. of Facility Operating License No. NPF-63 to require compliance with the revised plans.

Basis for proposed no significant hazards consideration determination: On August 4, 1986 (51 FR 27817 and 27822), the Nuclear Regulatory Commission amended Part 73 of its regulations, "Physical Protection of Plants and Materials," to clarify plant security requirements to afford an increased assurance of plant safety. The amended regulations required that each nuclear reactor power licensee submit proposed amendments to its security plan to implement the revised provisions of 10 CFR 73.55. The licensee submitted its revised plan on November 26, 1986 and September 23, 1987, to satisfy the requirements of the amended regulations. The Commission proposes to amend the licenses to reference the revised plan.

In the supplementary materials accompanying the amended regulations the Commission indicated that it was amending its regulations "to provide a more safety conscious safeguards system while maintaining the current levels of protection" and that the "Commission believes that the clarification and refinement of requirements as reflected in these amendments is [sic] appropriate because they afford an increased assurance of plant safety."

The Commission has provided guidance concerning the application of the criteria for determining whether or not a no significant hazards consideration exists by providing certain examples of actions not likely to involve significant hazards considerations and examples of actions likely to involve significant hazards considerations (51 FR 7750). One of the examples of actions not likely to involve significant hazards considerations is example (vii) "a change to conform a license to changes in the regulations, where the license change results in very minor changes to facility operations clearly in keeping with the regulations." The changes in this case fall within the scope of the example. For the foregoing reasons, the Commission proposes to determine that the proposed amendment involves no significant hazards consideration.

Local Public Document Room location: Richard B. Harrison Library, 1313 New Bern Avenue, Raleigh, North Carolina 27610.

Attorney for licensees: R.E. Jones, General Counsel, Carolina Power & Light Company, P.O. Box 1551, Raleigh, North Carolina 27602.

NRC Project Director: Elinor G. Adensam.

Commonwealth Edison Company, Docket Nos. STN 50-454 and STN 50-455, Byron Station Unit Nos. 1 and 2, Ogle County, Illinois; Docket Nos. STN 50-456 and STN 457, Braidwood Station, Unit Nos. 1 and 2, Will County, Illinois

Date of application for amendments: January 18, 1988.

Brief description of amendments: These amendments would revise the Technical Specifications in the following seven areas:

1. *Specific Activity* (pages 3/4 4-27 and 28, B 3/4 4-5 and 6, and 6-18) The amendment would change the shutdown and reporting requirements resulting from high specific activity of the reactor coolant.

2. *Cold Overpressure Protection (COP) System Setpoints* (page 3/4 4-40) The amendment would change the curve on page 3/4 4-40 to more conservative COP System Setpoints.

3. *Accumulator* (page 3/4 5-1) The amendment would allow other indications, in addition to the absence of alarms, to be used to verify accumulator borated water level ard nitrogen cover pressure.

4. *Containment Isolation Valves* (page 3/4 6-23, Byron only) The amendment would correct a typographical error.

5. *Plant Systems* (page 3/4 7-14, Byron only) The amendment would correct a typographical error.

6. *Component Cyclic or Transient Limits* (page 5-6) The amendment would make Technical Specification Table 5.7-1 consistent with the FSAR and Section XI of the ASME code.

7. *Administrative Controls* (pages 6-8 and 6-13, Byron only, and page 6-7) The amendment would correct and update the titles of various management personnel, and clarify the authority of some Quality Assurance personnel.

Basis for proposed no significant hazards consideration determination: The staff has evaluated this proposed amendment and has determined that it involves no significant hazards considerations. According to 10 CFR 50.92(c), a proposed amendment to an operating license involves no significant hazards considerations if operation of the facility in accordance with the proposed amendment would not:

1. Involve a significant increase in the probability or consequences of an accident previously evaluated; or

2. Create the possibility of a new or different kind of accident from any accident previously evaluated; or

3. Involve a significant reduction in a margin of safety.

All the changes requested have been evaluated as presented below:

1. The changes to the Specific Activity Technical Specifications 3.4-8, Bases 3/4.4.8, and 6.9.1.5 are consistent with Generic Letter 85-19. The reporting requirements for iodine spiking are being reduced from a Special Report to an item to be included in an Annual Report. Also, the requirement to shutdown the plant if coolant iodine activity limits are exceeded for 800 hours in a 12-month period has been deleted because improved industry wide fuel quality has resulted in normal coolant iodine activity which is well below this limit. In addition, 10 CFR 50.72(b)(1)(ii) requires that NRC be immediately notified of fuel cladding failures that exceed expected values or that are caused by unexpected factors. Therefore, this Technical Specification limit is no longer considered necessary on the basis that proper fuel management and existing reporting requirements should preclude ever approaching the limit. Therefore, the changes do not involve a significant increase in the probability or consequences of an accident previously evaluated.

Since the changes are consistent with the appropriate Byron/Braidwood FSAR section and analysis and no physical modifications are being made in the plant, the possibility for an accident or malfunction of a different type than any previously evaluated is not created.

Since appropriate measures will remain in place to address primary coolant iodine spiking, the margin of safety will not be reduced.

2. The Cold Overpressure Protection (COP) system setpoints (page 3/4 4-40) in the current Technical Specifications and those requested both meet the Appendix G criteria. The changes request more conservative COP system setpoints to address a larger uncertainty assumed in the wide range temperature instrumentation and to prevent the need for additional stress evaluations following a single overpressure event. Therefore, the changes do not involve a significant increase in the probability or consequences of an accident previously evaluated.

Since the changes are consistent with the appropriate Byron/Braidwood FSAR section and analysis and no physical modifications are being made in the plant, the possibility for an accident or malfunction of a different type than any previously evaluated is not created.

Since the cold overpressure protection response setpoints are more conservative than the current Technical Specifications, the margin of safety does not involve a significant reduction.

3. Accumulator Technical Specification 4.5.1.1.a.1 will still require verification of accumulator parameters assumed in the Byron/Braidwood FSAR analysis but the revised wording will allow the operators flexibility in how these parameters will be verified. The changes do not involve a significant increase in the probability or consequences of an accident previously evaluated.

Since the changes are consistent with the appropriate Byron/Braidwood FSAR section and analysis and no physical modifications are being made in the plant, the possibility for an accident or malfunction of a different type, than any previously evaluated is not created.

Since the appropriate administrative controls will remain in place to verify accumulator parameters assumed in the Byron/Braidwood FSAR, the margin of safety is not reduced.

4. The change to Table 3.6-1 is being made to correct a typographical error for one Safety Injection Valve number. The change does not involve an increase in the probability or consequences of an accident previously evaluated.

Since the changes are consistent with the appropriate Byron/Braidwood FSAR section and analysis and no physical modifications are being made in the plant, the possibility for an accident or malfunction for a different type than any previously is not created.

Since the Table 3.6-1 changes are being made to be consistent with the Byron/Braidwood FSAR, the margin of safety is not reduced.

5. The change to Technical Specification 4.7.5 is being made to correct a typographical error for the UHS cooling tower basin water level. The change does not involve a significant increase in the probability or consequence of an accident previously evaluated.

Since the changes are consistent with the appropriate Byron/Braidwood FSAR section and analysis and no physical modifications are being made in the plant, the possibility for an accident or malfunction of a different type than any previously evaluated is not created.

Since the changes are being made to be consistent with the Byron/Braidwood FSAR, the margin of safety is not reduced.

6. The changes to Table 5.7-1 are being made to make the values be consistent with the Byron/Braidwood FSAR. The changes do not involve a significant increase in the probability or consequences of an accident previously evaluated.

Since the changes are consistent with the appropriate Byron/Braidwood FSAR section and analysis and no physical modifications are being made in the

plant, the possibility for an accident or malfunction of a different type than any previously evaluated is not created.

Since the Table 5.7-1 changes are being made to be consistent with the Byron/Braidwood FSAR, the margin of safety is not reduced.

7. The changes to Technical Specification 6.5 are administrative in nature and are being made to clarify some management titles and to further describe the functional authority of some Quality Assurance personnel. The change does not involve a significant increase in the probability or consequence of an accident previously evaluated.

Since the changes are consistent with the appropriate Byron/Braidwood FSAR section and analysis and no physical modifications are being made in the plant, the possibility for an accident or malfunction of a different type than any previously evaluated is not created.

Since the appropriate administrative controls will remain in place and are not being changed, the margin of safety is not reduced.

Therefore, based upon the previous analysis, the staff concludes that the proposed amendment to the Technical Specifications does not involve significant hazards considerations.

Local Public Document Room location: For Byron Station the Rockford Public Library, 215 N. Wyman Street, Rockford, Illinois 61101; for Braidwood Station the Wilmington Township Public Library, 201 S. Kankakee Street, Wilmington, Illinois 60481.

Attorney to licensee: Michael Miller, Esq., Sidley and Austin, One First National Plaza, Chicago, Illinois 60603.

Detroit Edison Company, Docket No. 50-341, Fermi-2, Monroe County, Michigan

Date of amendment request: December 2, 1986, and October 8, 1987.

Description of amendment request: In accordance with the requirements of 10 CFR 73.55, the licensee submitted an amendment to the Physical Security Plan for Fermi-2 to reflect recent changes to that regulation. The proposed amendment would modify paragraph 2.E of Facility Operating License No. NPF-43 to require compliance with the revised Plan.

Basis for proposed no significant hazards consideration determination: On August 4, 1986 (51 FR 27817 and 27822), the Nuclear Regulatory Commission amended Part 73 of its regulations, "Physical Protection of Plants and Materials," to clarify plant security requirements to afford an increased assurance of plant safety. The amended regulations required that each nuclear power reactor licensee submit proposed amendments to its security plan to implement the revised provisions of 10 CFR 73.55. The licensee submitted its revised plan on December 2, 1986, and October 8, 1987, to satisfy the requirements of the amended regulations. The Commission proposes to amend the license to reference the revised plan.

In the Supplementary Materials accompanying the amended regulations, the Commission indicated that it was amending its regulations "to provide a more safety conscious safeguards system while maintaining the current levels of protection" and that the "Commission believes that the clarification and refinement of requirements as reflected in these amendments is appropriate because they afford an increased assurance of plant safety."

The Commission has provided guidance concerning the application of the criteria for determining whether a significant hazards consideration exists by providing certain examples of actions involving no significant hazards considerations and examples of actions involving significant hazards considerations (51 FR 7750). One of these examples of actions involving no significant hazards considerations is example (vii) "a change to conform a license to changes in the regulations, where the license change results in very minor changes to facility operations clearly in keeping with the regulations." The changes in this case fall within the scope of the example. For the foregoing reasons, the Commission proposes to determine that the proposed amendment involves no significant hazards consideration.

Local Public Document Room location: Monroe County Library System, 3700 South Custer Road, Monroe, Michigan 48161.

Attorney for licensee: John Flynn, Esq., Detroit Edison Company, 2000 Second Avenue, Detroit, Michigan 48226.

NRC Project Director: Martin J. Virgilio.

Duke Power Company, Docket Nos. 50-369 and 50-370, McGuire Nuclear Station, Units 1 and 2, Mecklenburg County, North Carolina

Date of amendment request: February 5, 1988.

Description of amendment request: The proposed amendment would delete from the Design Features section 5.3.1 of the Technical Specifications (TS) the maximum fuel rod weight limit of 1766 grams of uranium. The purpose of the change would be to permit the use of assemblies found to be slightly over the weight limit. Additional change requests within the February 5, 1988 letter are outside the scope of this notice.

Basis for proposed no significant hazards consideration determination: The Commission has made a proposed determination that the amendment request involves no significant hazards consideration. Under the Commission's regulations in 10 CFR 50.92, this means that operation of the facility in accordance with the proposed amendment would not: (1) involve a significant increase in the probability or consequences of an accident previously evaluated; or (2) create the possibility of a new or different kind of accident from any accident previously evaluated; or (3) involve a significant reduction in a margin of safety.

The deletion of the fuel rod uranium weight limit does not significantly increase the probability or consequences of previously evaluated accidents. The variation in fuel rod weight that can occur even without a Technical Specification limit is small based on other fuel design constraints, e.g., rod diameter, gap size, UO-2 density and active fuel length; all of which provide some limit on the variation in rod weight. The current safety analyses are not based directly on fuel rod weight, but rather on design parameters such as power, and fuel dimensions. These parameters are either (1) not affected at all by fuel rod weight, or (2) only slightly affected. A review of design parameters which may be affected indicated that a change in fuel weight does not cause other design parameters to exceed the values assumed in the various safety analyses, or to cause acceptance criteria to be exceeded. The effects are not significant with respect to measured nuclear parameters (power, power distribution, nuclear coefficients), i.e., they remain within their Technical Specification limits. Thus, the Technical Specification modification would not involve a significant increase in the probability or consequences of a previously evaluated accident.

No new or different kind of accident from any previously evaluated accident would be created. All of the fuel contained in the fuel rod is similar to and designed to function similarly to previous fuel. In addition, the existing new and spent fuel storage criticality analyses bound the proposed changes observed.

The margin of safety is maintained by adherence to other fuel related Technical Specification limits and the FSAR design bases. The deletion of fuel rod weight limits in the Technical Specifications Design Features section

5.3.1 does not directly affect any safety analysis, system or the safety limits, thus it does not affect the plant margin of safety.

Therefore, based on the above considerations, the Commission proposes to determine that the changes do not involve a significant hazards consideration.

Local Public Document Room location: Atkins Library, University of North Carolina, Charlotte (UNCC Station), North Carolina 28242.

Attorney for licensee: Mr. Albert Carr, Duke Power Company, 422 South Church Street, Charlotte, North Carolina 28242.

NRC Project Director: Lawrence P. Crocker, Acting.

Duke Power Company, Docket Nos. 50-369 and 50-370, McGuire Nuclear Station, Units 1 and 2, Mecklenburg County, North Carolina

Date of application for amendments: March 14, 1988.

Description of amendment request: The proposed amendments would change the Technical Specifications (TS) by removing all text regarding Upper Head Injection (UHI) system.

Basis for proposed no significant hazards consideration determination: By previous Amendments 57 (McGuire Unit 1) and 38 (McGuire Unit 2), dated May 13, 1986, the Commission approved changes to the TS allowing operation with the UHI system (1) functionally disabled by closure of isolation valves or (2) physically removed. Because the changes applied to both of two units in the common TS document, each with different refueling outage schedules, and because each unit would operate one fuel cycle with UHI functionally disabled prior to physical removal, the previous changes contained provisions for the plant transition by specifying requirements during which the UHI system was (1) operable, (2) isolated but present, and (3) physically removed. The transition was completed during the 1987 refueling outages at which time the UHI system piping and valves were physically removed from each unit. Accordingly, all references in the TS to the UHI system are now obsolete. The licensee has requested that reference to the UHI system in the TS be removed to preclude any possible confusion over applicability of the extraneous specifications.

The Commission has provided guidance concerning the application of the standards for determining whether a significant hazard exists by providing certain examples (51 FR 7744). One of the examples of actions involving no significant hazards considerations is example (i) "a purely administrative change to technical specifications; for example, a change to achieve consistency throughout the technical specifications, correction of an error, or a change in nomenclature." The requested change to delete obsolete text has no safety implication, is purely administrative, and matches this example. Accordingly, the Commission proposes to determine that the proposed amendment would involve no significant hazards considerations.

Local Public Document Room location: Atkins Library, University of North Carolina, Charlotte (UNCC Station), North Carolina 28223.

Attorney for licensee: Mr. Albert Carr, Duke Power Company, 422 South Church Street, Charlotte, North Carolina 28242.

NRC Project Director: Darl S. Hood, Acting.

Duke Power Company, Docket Nos. 50-269, 50-270 and 50-287, Oconee Nuclear Station, Units 1, 2 and 3, Oconee County, South Carolina

Date of amendment request: July 28, 1987.

Description of amendment request: The proposed amendments would revise the Station's common Technical Specifications (TSs) in two areas: (1) To delete requirements to test redundant components for operability before initiating maintenance on any component of the high pressure injection (HPI) system, low pressure injection (LPI) system, reactor building cooling (RBC) system, reactor building spray (RBS) system, and the low pressure service water (LPSW) system, and (2) to correct and update TS with administrative-type of revisions. Specific administrative changes are:

- T.S. 3.7.2 *Auxiliary Electrical Systems* (page 3.7-3) is updated by the deletion of an expired footnote.
- T.S. Table 4.1-2 *Minimum Equipment Test Frequency* (page 4.1-9) is clarified by the addition of a footnote which indicates that functional testing of refueling system interlocks (Item 4) is applicable only to those interlocks associated with the reactor building purge system.
- T.S. 4.6.4 *Emergency Power Periodic Testing* (page 4.6-1) is updated by the deletion of an expired footnote.
- T.S. 4.18 *Snubbers* (page 4.18-1 and 4.18-2) is updated by the deletion of expired footnotes.

Currently at Oconee Nuclear Station testing of components of the HPI, LPI RBC, RBS, and LPSW systems is performed in accordance with the requirements of the ASME Boiler and Pressure Vessel Code, Section XI. The specific schedule and requirements for fulfilling ASME Section XI are provided in the Oconee Nuclear Station Inservice Inspection Program Manual. TS 4.0.4 requires performance of the Inservice Inspection (ISI) Program. Therefore, the ISI Program Manual is considered to be a binding extension of the TSs and any failure to meet these requirements is a violation of the TSs. In addition to Section XI, before initiating maintenance on any component of the HPI, LPI, RBC, RBS, and LPSW Systems, redundant components are tested for operability per the requirements of TS 3.3.

TS 3.3 requirements for redundant component testing were written prior to 10 CFR 50.55a which requires testing per ASME Section XI. The intent of TS 3.3 was to provide assurance and documentation that the redundant component is operable.

Specific pump testing requirements for Section XI require measurement or observation of pump speed, inlet pressure, differential pressure, flow rate, vibration amplitude, proper lubricant level or pressure, and bearing temperature every three months, (with the exception of flow and differential pressure measurement of the LPI "A" pump). The LPI "A" flow and differential pressure are checked during cold shutdowns due to the lack of accuracy of the installed instrumentation and assurance of repeatability in the recirculation mode. Pump testing per TS 3.3 is comprised of a relatively simple flow verification.

For valve testing, the stroke test procedure used to satisfy Section XI is normally used to satisfy TS 3.3.

Redundant component testing per TS 3.3 is not performed if testing of a redundant component would remove it from service, or if the redundant component is already in service (i.e. a running pump).

Basis for proposed no significant hazards consideration determination: The Commission has provided standards (10 CFR Part 50.92(c)) for determining whether a significant hazards consideration exists. A proposed amendment to an operating license for a facility involves no significant hazards consideration if operation of the facility in accordance with the proposed amendment would not:

1. Involve a significant increase in the probability or consequences of an accident previously evaluated; or

2. Create the possibility of a new or different kind of accident from any accident previously evaluated; or

3. Involve a significant reduction in a margin of safety.

First Standard

The amendments would not involve a significant increase in the probability or consequences of an accident previously evaluated.

Each accident analysis addressed in the Oconee Final Safety Analysis Report (FSAR) has been examined by the licensee with respect to the deletion of requirements to test redundant components for operability before initiating maintenance on any component of the HPI, LPI, RBC, RBS, or the LPSW Systems (TS 3.3). Currently, periodic testing such as that required by the ASME Boiler and Pressure Vessel Code, Section XI provides the necessary assurance and documentation that the redundant component is operable. Based on the effectiveness of the Section XI surveillance program and the lack of inoperable components identified by TS 3.3, redundant testing requirements will not involve a significant increase in the probability or consequences of any previously evaluated accident.

In addition, each accident analysis addressed in the Oconee FSAR has been examined with respect to administrative changes included in this amendment request. Specifically:

- T.S. 3.7.2 *Auxiliary Electrical Systems* (page 3.7–3) would be updated by the deletion of an expired footnote.
- T.S. Table 4.1–2 *Minimum Equipment Test Frequency* (page 4.1–9) would be clarified by the addition of a footnote which indicates that functional testing of refueling system interlocks (Item 4) is applicable only to those interlocks associated with the reactor building purge system.
- T.S. 4.6.4 *Emergency Power Periodic Testing* (page 4.6–1) would be updated by the deletion of an expired footnote.
- T.S. 4.18 *Snubbers* (pages 4.18–1 and 4.18–2) would be updated by the deletion of expired footnotes.

The preceding changes are administrative in nature and, as such, are not an initiator or contributor to any Design Basis Accident (DBA). Therefore, there will not be a significant increase in the probability or consequences of previously analyzed accidents due to this change.

Second Standard

The amendments would not create the possibility of a new or different kind of accident from any accident previously evaluated.

The licensee states that periodic testing such as required by the ASME Boiler and Pressure Vessel Code, Section XI provides the necessary assurance and documentation that redundant components of the HPI, LPI, RBC, RBS, and the LPSW Systems are operable. As such, the deletion of redundant testing requirements will not create the possibility of a new kind of accident from any accident previously evaluated.

The changes to TS 3.7.2, TS Table 4.1–2, TS 4.6.4, and TS 4.18 are purely administrative in nature. As such, the possibility of a new or different kind of accident from any accident previously evaluated will not be created as a result of these changes.

Third Standard

The amendments would not involve a significant reduction in a margin of safety.

The deletion of redundant testing requirements from TS 3.3 will not involve a significant reduction of a margin of safety as the necessary assurance and documentation of operability for redundant components of the HPI, LPI, RBC, RBS, and LPSW Systems is provided by periodic testing such as that required by the ASME Code.

The changes to TS 3.7.2, TS Table 4.1–2, TS 4.6.4, and TS 4.18 do not involve any margin of safety as they are purely administrative in nature. Therefore, there will be no reduction in any margin of safety.

Therefore, the proposed action would not: (1) Involve a significant increase in the probability or consequences of an accident previously evaluated; (2) create the possibility of a new or different kind of accident from any accident previously evaluated; or (3) involve a significant reduction in a margin of safety.

On this basis, the Commission proposes to determine that the application involves no significant hazards consideration.

Local Public Document Room location: Oconee County Library, 501 West South Broad Street, Walhalla, South Carolina 29691.

Attorney for licensee: J. Michael McGarry, III, Bishop, Liberman, Cook, Purcell and Reynolds, 1200 17th Street, NW., Washington, DC 20036.

NRC Project Director: Kahtan Jabbour, Acting.

Duke Power Company, Docket Nos. 50–269, 50–270 and 50–287, Oconee Nuclear Station, Units 1, 2 and 3, Oconee County, South Carolina

Date of amendment request: August 11, 1987.

Description of amendment request: The proposed amendments would revise the Station's common Technical Specifications (TSs) to revise Table 3.17–1 (Fire Hose Stations). The amendments would also change the location and valve numbers of a number of fire hose stations and correct typographical errors.

The proposal consists of revisions to Table 3.17–1 (Fire Hose Stations) in the Fire Protection and Detection System TS. Presently, there are a number of fire hose stations located inside the Cable Spreading and Equipment Rooms at Oconee. The location number, valve number and the area or component protected by each of the hose stations is listed in Table 3.17–1. The licensee determined that it is not practical to have these fire hose stations inside the rooms where a fire may be occurring. A station modification will relocate some of these hose stations from inside to just outside the entrances to the rooms. The licensee states that this modification will enhance the accessibility of the hose stations in the event of a fire and will remove portions of the fire protection header from the rooms. With this modification, in the case of a fire in these rooms, fire brigade personnel would not have to enter the room to obtain use of the fire equipment.

For the Cable Spreading Rooms, the modification includes moving AX–35, AX–33, AX–32, AX–30 and AX–31 to stairwell locations outside the room. The new hose stations will have the same location number and valve number as previously assigned. The fire hose station at location AX–34 is being deleted. Coverage for this entire room (#1 Cable Spreading Room) is being provided by AX–35. In addition, the hose station at AX–33 is providing coverage for both the #1 and #2 Cable Spreading Rooms from a common stairwell. The hose stations in the Electrical Equipment rooms are being deleted. Credit for adequate fire protection coverage is being taken for existing hose stations outside the rooms. Once the hose stations are relocated, all areas of the affected rooms will still be within 100 feet of a hose station thereby maintaining adequate manual fire suppression capability.

Also included in this proposed revision to Table 3.17–1 are corrections to typographical errors. These errors were identified in the descriptions for location numbers, valve numbers and protected areas.

Basis for proposed no significant hazards consideration determination: The Commission has provided standards (10 CFR Part 50.92(c)) for determining whether a significant hazards consideration exists. A proposed amendment to an operating

license for a facility involves no significant hazards consideration if operation of the facility in accordance with the proposed amendment would not:

1. Involve a significant increase in the probability or consequences of an accident previously evaluated; or

2. Create the possibility of a new or different kind of accident from any accident previously evaluated; or

3. Involve a significant reduction in a margin of safety.

Table 3.17-1 of the Oconee Technical Specifications, as proposed, would provide an accurate listing of the manual fire suppression capabilities which are available at Oconee. The proposed amendments would not involve a significant increase in the probability or consequences of an accident previously evaluated. By relocating the hose stations outside the Cable Spreading Rooms and Electrical Equipment Rooms, the potential for soaking electrical equipment, from a rupture of pressurized hose systems, is eliminated. The modifications would result in reducing the probability and consequences of this type of accident occurring.

The proposed amendments would not create the possibility of a new or different kind of accident from any accident previously evaluated. The relocated hose stations would he located in stairwells where no other equipment is located.

Lastly, the proposed amendments would not involve a sigrificant reduction in a margin of safety. The fire hose stations will be more safe to use once all the hose stations are located outside the rooms which could potentially contain a fire. Fire brigade personnel will be able to obtain control of the equipment before entering the fire hazard area. Also, each room will continue to have complete fire protection coverage by relocating or reassigning the hose stations which are responsible for protection. Once the hose stations are relocated, all areas of the affected rooms will still be within 100 feet of a hose station as committed to in Appendix A to Branch Technical Position 9.5-1.

Therefore, the proposed action would not: (1) Involve a significant increase in the probability or consequences of an accident previously evaluated; or (2) create the possibility of a new or different kind of accident from any accident previously evaluated; or (3) involve a significant reduction in a margin of safety.

On this basis, the Commission proposes to determine that the application involves no significant hazards consideration.

Local Public Document Room location: Oconee County Library, 501 West South Broad Street, Walhalla, South Carolina 29691.

Attorney for licensee: J. Michael McGarry, III, Bishop, Liberman, Cook, Purcell and Reynolds, 1200 17th Street, NW., Washington, DC 20036.

NRC Project Director: Kahtan Jabbour, Acting.

Florida Power and Light Company, Docket Nos. 50-250 and 50-251, Turkey Point Plant Units 3 and 4, Dade County, Florida

Date of amendments request: February 11, 1988.

Description of amendments request: Currently, the plant Technical Specifications (TS) require the use of slightly enriched uranium in the reactor cores. Also, the TS do not permit fewer than 204 fuel rods per assembly. The proposed amendments will revise the plant TS to permit the use of natural uranium axial blankets in the core fuel assemblies. The revised TS would also permit the use of a stainless steel replacement rod or the removal of a fuel rod from a fuel assembly once that rod has been determined to be leaking.

Basis for proposed no significant hazards consideration determination: The Commission has provided standards for determining whether a significant hazards consideration exists (10 CFR 50.92(c)). A proposed amendment to an operating license for a facility involves no significant hazards considerations if operation of the facility in accordance with the proposed amendment would not: (1) Involve a significant increase in the probability or consequences of an accident previously evaluated; or (2) create the possibility of a new or different kind of accident from an accident previously evaluated; or (3) involve a significant reduction in a margin or safety.

The licensee addressed the above three standards in the amendment application. Text from the licensee's evaluation is provided below:

Using these criteria, this proposed amendment does not involve a significant hazards consideration. This is based on the following:

1. The amendment will not increase the probability of an accident since the configuration of the plant remains the same and the plant operating modes will be unchanged. Additionally, the consequences of a previously analyzed accident will not be increased since the plant operating and safety limits are not changed by this amendment.

2. The amendment will not create the possibility of a new or different accident not previously analyzed since the operating and plant configuration will not be changed.

3. This amendment will not reduce the margin of safety since the plant operating and safety limits will remain unchanged. Future cycle designs utilizing unenriched uranium will be required to meet all required safety and operation limits.

In addition the NRC had provided examples of amendments that are considered not likely to involve significant hazards considerations (Reference) [SIC]. This proposed amendment matches example (iii):

A change resulting from a nuclear reactor core reloading, if no fuel assemblies significantly different from those found previously acceptable to the NRC for a previous core at the facility in question are involved. This assumes that no significant changes are made to acceptance criteria for the Technical Specifications, that the analytical methods used to demonstrate conformance with the Technical Specifications and regulations [not] significantly changed, and that the NRC has previously found such methods acceptable.

This particular amendment for the proposed use of natural uranium blankets or replacement of fuel rods matches this example since these assemblies are not significantly different from the fuel assemblies previously approved for Turkey Point. In addition, the same rigorous RSE is performed for each reload cycle and all operating and safety limits specified in the Technical Specification are met. Based on the standards of 10 CFR 50.92(c), this proposed amendment does not involve a significant hazards consideration.

This is further verified by comparing this change with the example given the **Federal Register**, where it is obvious that this is a change that results from reactor core reloading and, therefore, clear that operation of the Turkey Point Plant, in accordance with this proposed amendment, will not pose a threat to the public health and safety.

The staff has reviewed the licensee's no significant hazards consideration evaluation. The Commission has provided guidance to the staff concerning the application of the standards for determining whether a significant hazards consideration exists by providing certain examples (51 FR 7751) of changes that are considered not likely to involve significant hazards considerations. The staff believes the licensee's proposal is typical of example (iii) noted above in the licensee's evaluation. Therefore, the staff concludes the licensee has met the three standards, and the staff proposed to determine that the proposed changes do not involve a significant hazards consideration.

Local Public Document Room location: Environmental and Urban Affairs Library, Florida International University, Miami, Florida 33199.

Attorney for licensee: Harold F. Reis, Esquire, Newman and Holtzer, P.C., 1615 L Street, N.W., Washington, D.C. 20036.

NRC Project Director: Herbert N. Berkow.

GPU Nuclear Corporation et al., Docket No. 50-289, Three Mile Island Nuclear Station, Unit No. 1, Dauphin County, Pennsylvania

Date of amendment request: March 17, 1988.

Description of amendment request: This amendment would remove the GPU Nuclear organization charts from Section 6.2 of the Technical Specifications

Basis for proposed no significant hazards consideration determination: As required by 10 CFR 50.91(a), GPU Nuclear Corporation performed an analysis of the requested amendment and concluded that they do not involve a significant hazards consideration because the changes would not:

(1) Involve a significant increase in the probability or consequences of an accident previously evaluated.

The proposed change does not involve a significant increase in the probability or consequences of an accident previously evaluated because deletion of the organization charts and position titles from the Technical Specifications does not affect plant operation. As in the past, the NRC will continue to be informed of organizational changes through other required controls. In accordance with 10 CFR 50.34(b)(6)(i) the applicant's organizational structure is required to be included in the Updated Final Safety Analysis Report. Chapter 12 of the Updated Final Safety Analysis Report provides a description of the organization and detailed organization charts. As required by 10 CFR 50.71(e) GPUN submits annual updates to the Updated FSAR. Appendix B to 10 CFR Part 50 and 10 CFR 50.54(a)(3) govern changes to organization described in the Quality Assurance Program. Some of these organizational changes require prior NRC approval. Also, it is GPUN's practice to inform the NRC of organizational changes affecting the nuclear facilities prior to implementation.

The requirements for training are also contained in the Updated FSAR and the same controls apply.

(2) Create the possibility of a new or different kind of accident from any accident previously evaluated.

The proposed amendment does not create the possibility of a new or different kind of accident than previously evaluated because the proposed change is administrative in nature, and no physical alterations of plant configuration or changes to setpoints or operating parameters are proposed.

(3) Involve a significant reduction in a margin of safety.

The proposed amendment does not involve a significant reduction in a margin of safety because GPUN, through its Quality assurance programs, its commitment to maintain only qualified personnel in positions of responsibility, and other required controls, assures that safety functions will be performed at a high level of competence. Therefore, removal of the organization chart from the Technical Specifications will not affect the margin of safety.

The staff has reviewed the proposed amendment and agrees with the licensee's conclusion that it does not involve a significant hazards consideration.

Local Public Document Room location: Government Publications Section, State Library of Pennsylvania, Walnut Street and Commonwealth Avenue, Box 1601, Harrisburg, Pennsylvania 17105.

Attorney for licensee: Ernest L. Blake, Jr., Esquire, Shaw, Pittman, Potts & Trowbridge, 2300 N Street, NW, Washington, D.C. 20037.

NRC Project Director: John F. Stolz.

Gulf States Utilities Company, Docket No. 50-498, River Bend Station, Unit 1 West Feliciana Parish, Louisiana

Date of amendment request: February 18, 1988.

Description of amendment request: The proposed amendment would modify Technical Specification (TS) 3.4.2.1 to change the setpoint tolerance of the safety valve function of the safety/relief valves (S/RV) from ±1% to (+)(0)(−)2% of the set pressure to be consistent with the licensee's safety analysis report (SAR) and the reactor vendor's design specification.

Basis for proposed no significant hazards consideration determination: The Commission has provided standards for determining whether a significant hazards consideration exists as stated in 10 CFR 50.92(c). A proposed amendment to an operating license for a facility involves no significant hazards consideration if operation of the facility in accordance with the proposed amendment would not: (1) Involve a significant increase in the probability or consequences of an accident previously evaluated; or (2) create the possibility of a new or different kind of accident from any accident previously evaluated; or (3) involve a significant reduction in a margin of safety. The licensee provided an analysis that addressed the above three standards in the amendment application.

(1) The change proposed by this submittal would not increase the probability or the consequences of a previously evaluated accident because:

This change has been determined to be more conservative by lowering the allowable S/RV setpoint tolerance by 1 percent, and agrees with the originally analyzed conditions presented in SAR Section 5.2.2.10 and reviewed by the staff in the Safety Evaluation Report (NUREG-0989) and therefore will not affect the response of the plant or equipment required for safety.

(2) The change proposed by this submittal would not create the possibility of a new or different kind of accident from any previously evaluated because:

The proposed change has been previously evaluated in the SAR Section 5.2.2.10 and will maintain the plant response within all previous analyses.

(3) This proposal as submitted would not involve a significant reduction in the margin of safety because:

The reduction in the allowable S/RV setpoint tolerance will act to increase, not decrease, any existing margin of safety. This proposed change does not reduce the margin of safety as defined in the basis of the Technical Specification.

The proposed amendment, as discussed above, has not changed the system design, function and operation contained in the SAR and therefore, will not increase the probability or the consequences of a previously evaluated event or will not create a new or different event. Since the ability to perform, as described in the SAR, is maintained by this change, the proposed changes do not result in a significant reduction in the margin of safety. Gulf States Utilities proposes that no significant hazards are involved.

The staff has reviewed the licensee's no significant hazards consideration. Based on the review and the above discussions, the staff proposes to determine that the proposed changes do not involve a significant hazards consideration.

Local Public Document Room location: Government Documents Department, Louisiana State University, Baton Rouge, Louisiana 70803.

Attorney for licensee: Troy B. Conner, Jr., Esq., Conner and Wetterhahn, 1747 Pennsylvania Avenue, NW., Washington, DC 20006.

NRC Project Director: Jose A. Calvo.

Illinois Power Company, Docket No. 50-461, Clinton Power Station, Unit 1, DeWitt County, Illinois

Date of application for amendment: February 5, 1988.

Description of amendment request: This amendment consists of a proposed change to Technical Specification Table 3.3.2-2, item 2.h, concerning the Trip Setpoint and Allowable Value for Turbine Building Temperature Monitors. The proposed change would increase the Trip Setpoint from less than or equal to 131.2 °F to less than or equal to 143.2 °F and the Allowable Value from less than or equal to 138 °F to less than or equal to 150 °F for Turbine Building Temperature Monitors 1E31-N563A, B, C, and D. The instrument setpoint calculations, performed in accordance with Regulatory Guide 1.105 "Instrument

Setpoints", established the current setpoint of 131.2 °F for these instruments. A maximum normal operating temperature of 122 °F was assumed for the setpoint calculations. Operating experience to date has shown that the ambient temperature that typically exists in the area of the subject instruments is 120–125 °F when the reactor is operating at 90–100% rated thermal power. Since Clinton has not yet operated at a sustained full reactor power level during summer conditions, the peak normal operating temperature in the applicable area may be higher. Based on the currently specified setpoint of 131.2 °F and the drift allowance of plus or minus 6.8 °F, the resulting effective setpoint is 124.4 °F. This effective setpoint value, which represents a very small operating margin, could result in an unwanted trip.

Basis for proposed no significant hazards consideration determination: The staff has evaluated this proposed amendment and determined that it involves no significant hazards considerations. According to 10 CFR 50.92(c), a proposed amendment to an operating license involves no significant hazards considerations if operation of the facility in accordance with the amendment would not:

1. Involve a significant increase in the probability or consequences of an accident previously evaluated; or
2. Create the possibility of a new or different kind of accident from any accident previously evaluated; or
3. Involve a significant reduction in a margin of safety.

The proposed amendment does not involve a significant increase in the probability or consequences of an accident previously evaluated because (a) Localized temperatures of 150 °F will cause no adverse environmental impact on systems, structures or components necessary for safe shutdown, (b) the proposed change does not impact the probability of occurrence of a leak, (c) only one of five turbine building areas in the vicinity of the main steam lines is affected by the proposed change, and (d) the trip setpoints for the monitors in the affected area are still based on the leakage rate assumed for the original setpoint and a leakage time determined to be acceptable such that the proposed change does not constitute a significant change in leak detection capability. In addition, the proposed change should decrease the probability of inadvertent main steam line isolations and reactor scrams. Radiation detection will continue to be provided as designed.

The proposed change does not create the possibility of a new or different kind of accident from any accident previously evaluated because the proposed change introduces no new modes of operation, failure modes or changes to any equipment other than the affected monitors (for which the effects on the applicable accident scenarios have been evaluated).

The proposed change does not involve a significant reduction in a margin of safety because the leak detection capability provided by the affected monitors will not be significantly reduced by the proposed change to the monitor setpoints. Other temperature monitors, as well as the associated radiation monitors, will not be affected at all.

For the reasons stated above, the staff believes the proposed amendment involves no significant hazards considerations.

Local Public Document Room location: The Vespasian Warner Public Library, 120 West Johnson Street, Clinton, Illinois 61727.

Attorney for licensee: Sheldon Zable, Esq., of Schiff, Hardin & Waite, 7200 Sears Tower, 233 Wacker Drive, Chicago, Illinois 60606.

NRC Project Director: Daniel R. Muller.

Louisiana Power and Light Company, Docket No. 50–382, Waterford Steam Electric Station, Unit 3, St. Charles Parish, Louisiana

Date of amendment request: December 23, 1987.

Description of amendment request: The Administrative Controls Section of the Technical Specifications describes, in part, the on-site and off-site organization charts of Waterford 3. The proposed change will revise the organization charts in Figures 6.2–1, Organization for Management and Technical Support, and 6.2–2, Plant Operations Organization. The licensee is requesting this revision as a result of their recent organizational restructuring.

The restructuring will include: the creation of a new position ertitled Nuclear Operations Manager, which will report to the Vice President—Nuclear; the elevation of the Event Analysis and Reporting Engineer to the Event Analysis, Reporting, and Response Superintendent, who will now report to the Plant Manager—Nuclear rather than the Assistance Plant Manager—Technical Services; the repositioning of the Nuclear Safety and Regulatory Affairs Manager, who will now report to the Senior Vice President—Nuclear rather than the Nuclear Services Manager; and the repositioning of the Nuclear Operations Construction Manager, who will now report to the Nuclear Operations Engineering Manager rather than the Vice President—Nuclear.

Basis for proposed no significant hazards consideration determination: The Commission has provided standards for determining whether a significant hazards consideration exists as stated in 10 CFR 50.92. A proposed amendment to an operating license for a facility involves no significant hazards consideration if operation of the facility in accordance with a proposed amendment would not (1) Involve a significant increase in the probability or consequences of an accident previously evaluated, (2) create the possibility of a new or different kind of accident from any accident previously evaluated, or (3) involve a significant reduction in a margin of safety.

The organizational changes proposed by the licensee will not affect any accident previously evaluated nor will they create the possibility of a new or different kind of accident from any previously evaluated. The changes are to promote more effective management and therefore, do not involve any reduction in a margin of safety.

Based on the above the staff proposes to determine that the proposed change does not involve a significant hazards consideration.

Local Public Document Room location: University of New Orleans Library, Louisiana Collection, Lakefront, New Orleans, Louisiana 70122.

Attorney for licensee: Bruce W. Churchill, Esq., Shaw, Pittman, Potts and Trowbridge, 2300 N St., NW., Washington, DC 20037.

NRC Project Director: Jose A. Calvo.

Northeast Nuclear Energy Company, et al., Docket Nos. 50–245, 50–336, and 50–423 Millstone Nuclear Power Station, Unit Nos. 1, 2, and 3, New London County, Connecticut

Date of amendment request: December 2, 1986 as supplemented by letter dated December 23, 1987.

Description of amendment request: In accordance with the requirements of 10 CFR 73.55, the licensee submitted an amendment to the Physical Security Plan for Millstone Unit Nos. 1, 2 and 3 to reflect recent changes to that regulation. The proposed amendment would modify paragraph (4), of Facility Operating License No. DPR–21, paragraph (4) of Facility Operating License No. DPR–65 and paragraph E of Facility Operating License No. NPF–49 to require compliance with the revised Plan.

Basis for proposed no significant hazards consideration determination: On August 4, 1986 (51 FR 27817 and 27822), the Nuclear Regulatory

Commission amended Part 73 of its regulations, "Physical Protection of Plants and Materials," to clarify plant security requirements to afford an increased assurance of plant safety. The amended regulations required that each nuclear power reactor licensee submit proposed amendments to its security plan to implement the revised provisions of 10 CFR 73.55. The licensee submitted its revised plan on December 2, 1986, as supplemented by letter dated December 23, 1987, to satisfy the requirements of the amended regulations. The Commission proposes to amend the licenses to reference the revised plan.

In the Supplementary Materials accompanying the amended regulations, the Commission indicated that it was amending its regulations "to provide a more safety conscious safeguard system while maintaining the current levels of protection" and that the "Commission believes that the clarification and refinement of requirements as reflected in these amendments is appropriate because they afford an increased assurance of plant safety."

The Commission has provided guidance concerning the application of the criteria for determining whether a significant hazards consideration exists by providing certain examples of actions involving no significant hazards considerations and examples of actions involving significant hazards considerations (51 FR 7750). One of these examples of actions involving no significant hazards considerations is example (vii) "a change to conform a license to changes in the regulations, where the license change results in very minor changes to facility operations clearly in keeping with the regulations." The changes in this case fall within the scope of the example. For the foregoing reasons, the Commission proposes to determine that the proposed amendment involves no significant hazards consideration.

Local Public Document Room location: Waterford Public Library, 49 Rope Ferry Road, Waterford, Connecticut 06385.

Attorney for licensee: Gerald Garfield, Esquire, Day, Berry and Howard, One Constitution Plaza, Hartford, Connecticut 06103.

NRC Project Director: John F. Stolz.

Northeast Nuclear Energy Company, et al., Docket No. 50-423, Millstone Nuclear Power Station, Unit No. 3, New London County, Connecticut

Date of amendment request: February 18, 1988.

Description of amendment request: The amendment would revise Technical Specification Section 3.4.9.3 to change the minimum Reactor Coolant System (RCS) vent area required for cold overpressure protection from 7.0 to 5.4 square inches. In addition, administrative changes to Technical Specification Sections 3.8.1.2, 3.8.2.2 and 3.8.3.1 would be changed to make them consistent with the revised Section 3.4.9.3.

The design basis cold overpressure transients are mitigated by the operation of one Power Operated Relief Valve (PORV) (see FSAR Section 5.2.2.11.2). The current value of 7 square inches in Technical Specification Section 3.4.9.3 was selected to ensure that one PORV would be removed to provide the vent area. There was an error in this selected value. This error necessitates the removal of both PORVs to meet the required vent area. The proposed changes would require the removal of only one PORV to provide the required vent area.

Basis for proposed no significant hazards consideration determination: In accordance with 10 CFR 50.92, NNECO has reviewed the proposed changes and has concluded that they do not involve a significant hazards consideration because the changes would not:

1. Involve a significant increase in the probability or consequences of an accident previously evaluated. The proposed changes lower the minimum required vent area to that of the pipe for each PORV. The design basis cold overpressure protection transients are mitigated by the operation of one PORV. The cross-sectional area of the piping for each PORV is 5.4 square inches. This area is more than sufficient to provide the required flow rate for cold overpressurization events. Therefore, the use of an equivalent 5.4 square inch vent will not impact the consequences of the cold overpressure transients. The changes only modify the minimum required vent size for cold overpressure protection transients. Therefore, the changes will not affect the probability of failure of this system. Therefore, the proposed changes do not involve an increase in the probability or consequences of an accident previously evaluated.

2. Create the possibility of a new or different kind of accident from any previously evaluated. The proposed changes lower the minimum required vent area while still keeping it larger than that assumed in the design basis analysis. Therefore, plant response is not modified to the point when it can be considered a new accident. Therefore, the proposed changes do not create the possibility of an accident or malfunction of a different type than any evaluated previously in the safety analysis report.

3. Involve a significant reduction in a margin of safety. Since the proposed changes do not affect the consequences of an accident previously analyzed, there is no reduction in a margin of safety.

The staff has reviewed NNECO's proposed amendment and agrees with its conclusion that the amendment does not involve a significant hazards consideration.

Local Public Document Room location: Waterford Public Library, 49 Rope Ferry Road, Waterford, Connecticut 06385.

Attorney for licensee: Gerald Garfield, Esquire, Day, Berry & Howard, One Constitution Plaza, Hartford, Connecticut 06103-3499.

NRC Project Director: John F. Stolz.

Northern States Power Company, Docket No. 50-263, Monticello Nuclear Generating Plant, Wright County, Minnesota

Date of amendment request: November 24, 1986, September 8, 1987, and November 30, 1987.

Description of amendment request: In accordance with the requirements of 10 CFR 73.55, the licensee submitted an amendment to the Physical Security Plan for the Monticello Nuclear Generating Plant to reflect recent changes to that regulation. The proposed amendment would modify paragraph 2.C.3 of Facility Operating License No. DPR-22 to require compliance with the revised Plan.

Basis for proposed no significant hazards consideration determination: On August 4, 1986 (51 FR 27817 and 27822);, the Nuclear Regulatory Commission amended Part 73 of its regulations, "Physical Protection of Plants and Materials," to clarify plant security requirements to afford an increased assurance of plant safety. The amended regulations required that each nuclear power reactor licensee submit proposed amendments to its security plan to implement the revised provisions of 10 CFR 73.55. The licensee submitted its revised plan on November 24, 1986, September 8, 1987, and November 30, 1987, to satisfy the requirements of the amended regulations. The Commission proposes to amend the license to reference the revised plan.

In the Supplementary Materials accompanying the amended regulations, the Commission indicated that it was amending its regulations "to provide a more safety conscious safeguards system while maintaining the current levels of protection" and that the "Commission believes that the clarification and refinement of requirements as reflected in these amendments is appropriate because they afford an increased assurance of plant safety."

The Commission has provided guidance concerning the application of the criteria for determining whether a significant hazards consideration exists

by providing certain examples of actions involving no significant hazards considerations and examples of actions involving significant hazards considerations (51 FR 7750). One of these examples of actions involving no significant hazards considerations is example (vii) "a change to conform a license to changes in the regulations, where the license change results in very minor changes to facility operations clearly in keeping with the regulations." The changes in this case fall within the scope of the example. For the foregoing reasons, the Commission proposes to determine that the proposed amendment involves no significant hazards consideration.

Local Public Document Room location: Minneapolis Public Library, Technology and Science Department, 300 Nicollet Mall, Minneapolis, Minnesota 55401.

Attorney for licensee: Gerald Charnoff, Esq., Shaw, Pittman, Potts and Trowbridge, 2300 N Street, NW., Washington, DC 20037.

NRC Project Director: Martin J. Virgilio.

Northern States Power Company, Dockets Nos. 50-282 and 50-306, Prairie Island Nuclear Generating Plant, Units Nos. 1 and 2, Goodhue County, Minnesota

Date of amendments request: November 24, 1986, September 4, 1987, and November 30, 1987.

Description of amendments request: In accordance with the requirements of 10 CFR 73.55, the licensee submitted an amendment to the Physical Security Plan for the Prairie Island Nuclear Generating Plant, Units 1 and 2, to reflect recent changes to that regulation. The proposed amendments would modify paragraphs 2.C(3) of Facility Operating Licenses Nos. DPR-42 and DPR-60 to require compliance with the revised Plan.

Basis for proposed no significant hazards consideration determination: On August 4, 1986 (51 FR 27817 and 27822), the Nuclear Regulatory Commission amended Part 73 of its regulations, "Physical Protection of Plants and Materials," to clarify plant security requirements to afford an increased assurance of plant safety. The amended regulations required that each nuclear power reactor licensee submit proposed arendments to its security plan to implement the revised provisions of 10 CFR 73.55. The licensee submitted its revised plan on November 24, 1986, September 4, 1987, and November 30, 1987, to satisfy the requirements of the amended regulations. The Commission proposes to amend the licenses to reference the revised plan.

In the Supplementary Materials accompanying the amended regulations, the Commission indicated that it was amending its regulations "to provide a more safety conscious safeguards system while maintaining the current levels of protection" and that the "Commission believes that the clarification and refinement of requirements as reflected in these amendments is appropriate because they afford an increased assurance of plant safety."

The Commission has provided guidance concerning the application of the criteria for determining whether a significant hazards consideration exists by providing certain examples of actions involving no significant hazards considerations and examples of actions involving significant hazards considerations (51 FR 7750). One of these examples of actions involving no significant hazards considerations is example (vii) "a change to conform a license to changes in the regulations, where the license change results in very minor changes to facility operations clearly in keeping with the regulations." The changes in this case fall within the scope of the example. For the foregoing reasons, the Commission proposes to determine that the proposed amendments involve no significant hazards consideration.

Local Public Document Room location: Technology and Science Department, Minneapolis Public Library, 300 Nicollet Mall, Minneapolis, Minnesota.

Attorney for licensee: Jay Silberg, Esq., Shaw, Pittman, Potts, and Trowbridge, 2300 N Street, NW., Washington, DC 20037.

NRC Project Director: Martin J. Virgilio.

Omaha Public Power District, Docket No. 50-285, Fort Calhoun Station, Unit No. 1, Washington County, Nebraska

Date of amendment request: March 9, 1988.

Description of amendment request: The proposed amendment would change the Technical Specifications to incorporate organizational changes. Specifically, the Senior Vice President resporsible for the operation of Fort Calhoun Station is designated as Senior Vice President—Nuclear Production, Production Operations, Quality Assurance and Regulatory Affairs, and Production Engineer. In addition, the former arrangement included the reporting of the Fuels Division to this Senior Vice President. This change reflects the addition of a new Division, Production Ergineering which will report to the Senior Vice President and will perform the engineering function and support for the facility. A new Security Services position has been created which reports to the Division Manager—Nuclear Production. The Supervisor—Security position, who currently was designated as reporting under the Manager—Fort Calhoun Station, has been removed from this reporting change and reports to the new Security Services position. Also, two existing supervisors reporting to Supervisor—Maintenance have been replaced with 6 supervisory positions, one for each maintenance craft. Finally, the Plant Review Committee membership has been changed as a result of the above changes. The Plant Review Committee membership will be expanded by one member. Figures 5-1 and 5-2 have been revised to reflect these organizational changes. These changes being made are also being reflected in the titles in Sections 5.5.2.2, 5.5.2.8i, 5.5.2.9, 5.5.2.10a, 5.5.2.10b and 5.5.2.10c.

Basis for proposed no significant hazards consideration determination: The Commission has provided guidance concerning the application of the standards for determining whether a significant hazards consideration exists by providing certain examples (51 FR 7751) of amendments that are considered not likely to involve significant hazards considerations. This amendment request is similar to the example of a purely administrative change to the Technical Specifications. This amendment request is also similar to the example that constitutes an additional limitation, restriction or control not presently included in the Technical Specifications. Based on the above, the Commission proposes to determine that the requested amendment does not involve a significant hazards consideration.

Local Public Document Room location: W. Dale Clark Library, 215 South 15th Street, Omaha, Nebraska 68102.

Attorney for licensee: LeBoeuf, Lamb, Leiby, and MacRae, 1333 New Hampshire Avenue, NW., Washington, DC. 20036.

NRC Project Director: Jose A. Calvo.

Portland General Electric Company et al., Docket No. 50-344, Trojan Nuclear Plant, Columbia County, Oregon

Date of amendment request: February 17, 1988.

Description of amendment request: The proposed amendment would revise Trojan Technical Specification (TS) Section 3/4.3.3.10, "Radioactive Liquid

Effluent Instrumentation" by adding operability and surveillance requirements for a new radiation monitor (PRM-17) and flowrate monitor (FI-4921). This instrumentation is being added to the TS as a result of a system modification for the Steam Generator Blowdown System (SGBS).

Basis for proposed no significant hazards consideration determination: 10 CFR 50.92 states that a proposed amendment will not involve a significant hazards consideration if the proposed amendment does not: (1) Involve a significant increase in the probability or consequences of an accident previously evaluated; or (ii) Create the possibility of a new or different kind of accident from any accident previously evaluated; or (iii) Involve a significant reduction in a margin of safety.

The proposed change will revise the list of instruments for which operability is governed by TS 3/4.3.3.10, "Radioactive Liquid Effluent Instrumentation," to incorporate modifications being implemented by a design change to the SGBS. A new steam generator blowdown ion exchanger effluent line gross radioactivity monitor providing automatic termination of release is being added to Tables 3.3-12 and 4.3-8. This new monitor (PRM-17) is being added as a result of the redesign of the SGBS effluent piping arrangement and will provide indication of the effluent radioactivity level immediately before release. A second steam generator blowdown effluent line flow rate monitor (FI-4921) is being added to Tables 3.3-12 and 4.3-8. This new effluent flow rate monitor is also being installed as part of the SGBS design change. The new monitor performs the same function as an existing monitor FI-6715, but provides remote indication on the SCBS control panel in the Turbine Building. The proposed change to the TS will allow either flow rate monitor to be used for blowdown effluent flow rate measurement.

This change does not involve a significant increase in the probability or consequences of an accident previously evaluated since the purpose of the instrumentation being added to TS 3/4.3.3.10 is to monitor steam generator blowdown effluent radioactivity levels and flow rate. The addition of this radioactivity monitor does not affect accident probability since its function is to detect and prevent a potential radioactivity release after an accident or event. Likewise, the probability of an accident is not changed by adding a blowdown flow rate instrument which provides only a monitoring function.

The consequences of an accident are likewise not increased by this change. Radiation Monitor PRM-17, which is being added to the TS will be located closer to the point of effluent release than the present steam generator blowdown effluent monitor and vill provide monitoring of blowdown effluent independent of the liquid radioactive waste system. Its location will allow it to provide accurate indication of activity in liquid effluent being released. The monitor will supply isolation signals to terminate steam generator blowdown to the blowdown tank and to block the ion exchanger discharge path. The present monitor used to perform the termination function is not being replaced. Rather, the new monitor will provide additional monitoring and isolation capability and will assume the function of isolating the discharge valve to the Discharge and Dilution Structure. The present monitor will continue to provide alarm and blowdown termination functions, and its operability will still be governed by the TS. It will continue to provide isolation of steam generator blowdown upon receipt of a containment isolation signal.

Section 15.6.3 of the Trojan UFSAR describes the analysis of a postulated steam generator tube rupture accident. The sequence of events initiated by such an accident is delineated, which includes termination of blowdown by the "steam generator liquid monitor", ie, PRM-10. The accuracy of that paragraph is not affected by the proposed change, except that the blowdown isolation signal may be provided by PRM-17.

The addition of the new flow rate monitor will have no effect on accident consequences. This proposed change would make two instruments available for monitoring blowdown rate, thus providing additional monitoring reliability. Additionally, the new monitor provides remote indication at the SGBS control panel in the turbine building. This proposed TS change would provide increased monitoring and isolation capability of the steam generator blowdown effluent path and therefore, reduce the potential consequences of an accident and probability for an unplanned release.

This change does not create the possibility of a new or different kind of accident from any previously evaluated. The operability of steam generator blowdown monitoring instrumentation is not relevant to accident creation. Its purpose is to monitor steam generator blowdown flow rate and activity and provide indication of elevated radioactivity levels after an accident has occurred.

This change does not involve a significant reduction in a margin of safety. The new radioactivity monitor to be added is the currently available replacement model for the monitor presently in use. The additional flow rate monitor is of similar design and performance capability as the present monitor and has the added feature of remote indication. This change adds to and enhances the steam generator blowdown effluent monitoring capability, and serves to decrease the potential for an undesirable release of radioactive liquid.

Based on the above, the staff proposes to determine that the requested changes do not involve a significant hazards consideration.

Local Public Document Room location: Portland State University Library, 731 SW., Harrison Street, Portland, Oregon 97207.

Attorney for licensee: Leonard A. Girard, Esq., Portland General Electric Company, 121 SW., Salmon Street, Portland, Oregon 97204.

NRC Project Director: George W. Knighton.

Southern California Edison Company, et al., Docket No. 50-206, San Onofre Nuclear Generating Station, Unit No. 1, San Diego County, California

Date of amendment request: April 28, 1987 (reference proposed change no. 164).

Description of amendment request: The proposed amendment would require all three reactor coolant pumps to be in operation when the reactor trip breakers are closed and the reactor plant is in Mode 3 (average coolant temperature above 350 °F). The additional restriction is needed to be consistent with the safety analysis assumptions for the main steam line break and control rod withdrawal accidents.

Basis for proposed no significant hazards consideration determination: As required by 10 CFR 50.91, the licensee has provided its analysis as to whether or not the proposed amendment involves a significant hazards consideration, as follows:

Proposed Change No. 164 is deemed not to constitute a significant hazards consideration, based on the following discussion. (1) Will operation of the facility in accordance with this proposed change involve a sigrificant increase in the probability or consequences of an accident previously evaluated? *Response:* No. As seen in the Description, this proposed change upgrades the Mode 3 decay heat removal (DHR) requirements with reactor trip breakers closed to those that presently exist for Modes 1 and 2. This change is totally consistent with the plant safety analysis

assumptions regarding the number of operating reactor coolant (RC) loops in Mode 3. If for some reason it is desired or becomes necessary to take one or two RC loops out of service while remaining in Mode 3, this can be accomplished if the reactor trip breakers are first opened to preclude the possibility of an accidental control rod bank withdrawal. Thus, this proposed change does not involve a significant increase in the probability or consequences of an accident previously evaluated; (2) Will operation of the facility in accordance with this proposed change create the possibility of a new or different kind of accident from any accident previously evaluated? *Response:* No. This proposed change does not change the physical configuration of the plant. It upgrades an existing limiting condition for operation for San Onofre Unit 1 consistent with the FSAR assumptions, but does not relax any other existing limiting condition for operation. Thus, the possibility of a new or different kind of accident from any accident previously evaluated is not created by this proposed change; and (3) Will operation of the facility in accordance with this proposed charge involve a significant reduction in a margin of safety? *Response:* No. The San Onofre Unit I Technical Specifications require that all three reactor coolant loops be in operation in Modes 1 and 2 (reactor is at power). An extension of this requirement to Mode 3 (reactor is subcritical) cannot cause a reduction in a margin of safety.

Proposed Change No. 164 satisfies Example (ii) of the Examples of Amendments that are Considered Not Likely to Involve Significant Hazards Considerations (page 7751 of the **Federal Register**, dated March 6, 1986) in that it 'constitutes an additional limitation, restriction or control not presently included in the technical specifications'.

The NRC staff has reviewed this analysis and agrees that the criteria appear to be satisfied. The NRC staff, therefore, proposes to determine that the amendment involves no significant hazards consideration.

Local Public Document Room location: General Library, University of California, P.O. Box 19557, Irvine, California 92713.

Attorney for licensee: Charles R. Kocher, Assistant General Counsel, and James Beoletto, Esquire, Southern California Edison Company, P.O. Box 800, Rosemead, California 91770.

NRC Project Director: George W. Knighton.

The Cleveland Electric Illuminating Company, Duquesne Light Company, Ohio Edison Company, Pennsylvania Power Company, Toledo Edison Company, Docket No. 50-440, Perry Nuclear Power Plant, Unit No. 1, Lake County, Ohio

Date of amendment request: February 9, 1988.

Description of amendment request: This amendment requests revision of the wording of Technical Specification 4.8.1.1.3 to allow reporting to be on a per diesel generator basis. The amendment also requests revision of notes to Technical Specification Table 4.8.1.1.2-1 to clarify how the number of failures is determined and how test frequency can be reduced by performance of overhauls and tests.

Basis for proposed no significant hazards consideration determination: The Commission has provided a standard for determining whether an action would involve a significant hazards consideration as stated in 10 CFR 50.92. A proposed amendment to an operating license for a facility would involve no significant hazards considerations if operation of the facility in accordance with the proposed amendment would not: (1) Involve a significant increase in the probability or consequences of an accident previously evaluated, (2) create the possibility of a new or different kind of accident from any accident previously evaluated, or (3) involve a significant reduction in a margin of safety. A discussion of the proposed change as it relates to these standards is provided below:

The proposed change does not involve a significant increase in the probability or consequences of an accident previously evaluated.

This proposed change does not change any of the requirements to demonstrate the reliability of the diesel generator following an appropriate overhaul. The purpose of the proposed change is to clarify the present wording to provide the flexibility, with the manufacturer's approval, to overhaul those parts of the diesel generator which have been causing test failures, without unnecessary overhauls of other parts of the diesel which have been demonstrated to be reliable. Since the reliability must be demonstrated after the overhaul the proposed change does not involve any significant increase in the probability or consequences of an accident previously evaluated. The footnote change to Table 4.8.1.1.2-1 and the change to 4.8.1.1.3 are clarifications and as such do not change the reliability of the diesel generator. Therefore the changes do not increase the probability or consequences of a previously evaluated accident.

The proposed change does not create the possibility of a new or different kind of accident from any previously evaluated.

This proposed change is a clarification of what an adequate overhaul of the diesel generator encompasses for the purpose of reducing the amount of testing performed on the diesel generator. The proposed change still requires that any portion of the diesel generator that has caused test failures be overhauled to like new conditions, that the overhaul be approved by the manufacturer, and that the diesel generator be tested to ensure reliability prior to reducing the number of valid test failures. The change would eliminate the need for doing unnecessary testing or maintenance on the diesel generator. The Table 4.8.1.1.2-1 footnote change and the change to 4.8.1.1.3 are clarifications which cannot create the possibility of a new or different kind of accident. As such no new or different kind of accident can be introduced by this change.

The proposed change does not involve a significant reduction in the margin of safety.

The licensee intends to establish a program to reduce unnecessary diesel generator surveillance testing by performance of a manufacturer approved overhaul of selected portions of the diesel generators to correct known, documented diesel gererator problems, demonstrate that reliability has been restored and ultimately reduce the testing frequency of the diesel generators to a monthly frequency and thus avoid the possibility of engine degradation due to excessive testing. This is in keeping with the intent of the staff's Generic Letter 84-15 dated July 2, 1984 to all Licensees of Operating Reactors, Applicants for an Operating License and Holders of Construction Permits. While the details of the licensee's program must be reviewed and evaluated, the concept of restoration of the diesel generators to like-new condition through overhaul, followed by demonstrated reliability testing is judged by the staff to be acceptable in forming a basis for reduction of testing frequency, thereby reducing the likelihood of premature engine degradation through excessive testing. Therefore, the staff proposes to determine that the proposed amendment involves no significant hazards considerations.

Local Public Document Room location: Perry Public Library, 3753 Main Street, Perry, Ohio 44081.

Attorney for licensee: Jay Silberg, Esq., Shaw, Pittman, Potts & Trowbridge, 2300 N Street, NW, Washington, DC 20037.

NRC Project Director: Kenneth E. Perkins.

Toledo Edison Company and The Cleveland Electric Illuminating Company, Docket No. 50-346, Davis-Besse Nuclear Power Station, Unit No. 1, Ottawa County, Ohio

Date of amendment request: March 12, 1987 and May 19, 1987.

Description of amendment request: The proposed amendment would revise the provisions in the Technical Specifications (TS's) in Appendix A, TS 3/4.7.7, relating to surveillance and functional testing of snubbers. Specifically, the proposed amendment would add a surveillance requirement for a post-transient inspection of all hydraulic and mechanical snubbers attached to sections of safety-related systems that have experienced a potentially damaging transient, and would add an acceptance criterion regarding functional testing for snubber activation. In addition, certain editorial changes to improve consistency, add clarity, and delete redundancy are proposed.

Basis for proposed no significant hazards consideration determination: The Commission has made a proposed determination that the amendment involves no significant hazards consideration. Under the Commission's regulations in 10 CFR 50.59, this means that the operation of the facility in accordance with the proposed amendment would not (1) Involve a significant increase in the probability or consequences of an accident previously evaluated; or (2) create the possibility of a new or different kind of accident from any accident previously evaluated; or (3) involve a significant reduction in a margin of safety.

The licensee has evaluated the proposed change against the above standards as required by 10 CFR 50.91(a). We have reviewed the licensee's evaluation, and agree with it. The licensee concluded that:

A. The change does not involve a significant increase in the probability or consequences of an accident previously evaluated because the proposed changes are either increasing the surveillance requirements or are administrative and, therefore, do not increase the probability or consequences of an accident previously evaluated.

B. The change does not create the possibility of a new or different kind of accident from any accident previously evaluated because the changes involve no accident or malfunction scenario. On matters related to nuclear safety, all accidents are bounded by previous analyses and no new accidents are involved.

C. The change does not involve a significant reduction in a margin of safety because the margin of safety is not reduced by these increased surveillance requirements and administrative changes.

Local Public Document Room location: University of Toledo Library, Documents Department, 2801 Bancroft Avenue, Toledo, Ohio 43606.

Attorney for licensee: Gerald Charnoff, Esquire, Shaw, Pittman, Potts and Trowbridge, 2300 N Street, NW, Washington, DC 20037.

NRC Project Director: Kenneth E. Perkins.

Toledo Edison Company and The Cleveland Electric Illuminating Company, Docket No. 50-346, Davis-Besse Nuclear Power Station, Unit No. 1, Ottawa County, Ohio

Date of amendment request: December 8, 1987.

Description of amendment request: The proposed amendment would revise the provisions in the Technical Specifications (TS's) relating to the surveillance requirements to demonstrate, periodically, the containment leak rate. Specifically, the amendment would change Surveillance Requirement 4.6.1.2.c.3 to specify that the supplemental test be conducted with a gas injection or bleed rate that is between 0.75 and 1.25 times the allowable leakage rate at the calculated internal peak pressure.

Basis for proposed no significant hazards consideration determination: The Commission has provided standards for determining whether a significant hazards consideration exists as stated in 10 CFR 50.92. A proposed amendment to an operating license for a facility involves no significant hazards consideration if operation of the facility in accordance with the proposed amendment would not (1) Involve a significant increase in the probability or consequences of an accident previously evaluated; or (2) create the possibility of a new or different kind of accident from any accident previously evaluated; or (3) involve a significant reduction in a margin of safety.

The licensee has evaluated the proposed change against the above standards as required by 10 CFR 50.91(a). The Commission has reviewed the licensee's evaluation and agrees with it. The licensee concluded that:

A. The change does not involve a significant increase in the probability or consequences of an accident previously evaluated because the proposed change only modifies the supplemental test used to verify the accuracy of the Type A test and does not modify any conditions assumed in previous accident evaluations.

B. The change does not create the possibility of a new or different kind of accident from any accident previously evaluated because the proposed change only modifies the supplemental test used to verify the accuracy of the Type A test.

C. The change does not involve a significant reduction in a margin of safety because all the Updated Safety Analysis Report assumptions remain unchanged.

Local Public Document Room location: University of Toledo Library, Documents Department, 2801 Bancroft Avenue, Toledo, Ohio 43606.

Attorney for licensee: Gerald Charnoff, Esquire, Shaw, Pittman, Potts and Trowbridge, 2300 N Street, NW, Washington, DC 20036.

NRC Project Director: Kenneth E Perkins.

Virginia Electric and Power Company, Docket Nos. 50-338 and 50-339, North Anna Power Station, Units No. 1 and No. 2, Louisa County, Virginia

Date of amendment request: December 11, 1986, October 14, 1987 and February 14, 1988.

Description of amendment request: In accordance with the requirements of 10 CFR 73.55, the Virginia Flectric and Power Company submitted amendments to the Physical Security Plan for the North Anna Power Station, Units No. 1 and No. 2 to reflect recent changes to that regulation. The proposed amendments would modify paragraph 2.E of Facility Operating Licenses No. NPF-4 and NPF-7 to require compliance with the revised Plan.

Basis for proposed no significant hazards consideration determination: On August 4, 1986 (51 FR 27817 and 27822), the Nuclear Regulatory Commission amended Part 73 of its regulations, "Physical Protection of Plants and Materials," to clarify plant security requirements to afford an increased assurance of plant safety. The amended regulations required that each nuclear power reactor licensee submit proposed amendments to its security plan to implement the revised provisions of 10 CFR 73.55. The licensee submitted its revised Plan on December 11, 1986, October 14, 1987 and February 14, 1988, to satisfy the requirements of the amended regulations. The Commission proposes to amend the licenses to reference the revised Plan.

In the Supplementary Materials accompanying the amended regulations, the Commission indicated that it was amending its regulations "to provide a

more safety conscious safeguards system while maintaining the current levels of protection" and that the "Commission believes that the clarification and refinement of requirements as reflected in these amendments is appropriate because they afford an increased assurance of plant safety."

The Commission has provided guidance concerning the application of the criteria for determining whether a significant hazards consideration exists by providing certain examples of actions involving no significant hazards considerations and examples of actions involving significant hazards considerations (51 FR 7750). One of these examples of actions involving no significant hazards considerations is example (vii), "a change to conform a license to changes in the regulations, where the license change results in very minor changes to facility operations clearly in keeping with the regulations." The charges in this case fall within the scope of the example. For the foregoing reasons, the Commission proposes to determine that the proposed amendments involve no significant hazards considerations.

Local Public Document Room location: Board of Supervisors Office, Louisa County Courthouse, Louisa, Virginia 23093 and the Alderman Library, Manuscripts Department, University of Virginia, Charlottesville, Virginia 22901.

Attorney for licensee: Michael W. Maupin, Esq., Hunton and Williams, P.O. Box 1535, Richmond, Virginia 23212.

NRC Project Director: Herbert N. Berkow.

Yankee Atomic Electric Company, Docket No. 50-029, Yankee Nuclear Power Station, Franklin County, Massachusetts

Date of amendment request: January 5, 1988 and as supplemented March 11, 1988.

Description of amendment request: The proposed amendment would put into effect the following four administrative changes:

1. The Plant Operations Manager would not be required to maintain a Senior Reactor Operator's license.
2. The Security Organization would report to a Security Manager who in turn would report to the Administrative Services Manager.
3. The Reactor Engineering Manager would report to the Assistant Technical Director.
4. Move the organization charts from Section 6.0 of the Technical Specifications to Section 501 of the Final Safety Analysis Report.

Basis for proposed no significant hazards consideration determination: The Commission has provided standards for determining whether a significant hazards determination exists as stated in 10 CFR 50.92(c). A proposed amendment to an operating license involves no significant hazards considerations if operation of the facility in accordance with the proposed amendment would not: (1) Involve a significant increase in the probability or consequences of an accident previously evaluated; or (2) create the possibility of a new or different kind of accident from any accident previously evaluated; or (3) involve a significant reduction in a margin of safety.

The licensee's analyses pertaining to the first three proposals, contained in the January 5, 1988 letter, states the following:

This proposed change is administrative in nature. It has been evaluated and determined to involve no significant hazards consideration. As such, this proposed change would not:

1. Involve a significant increase in the probability or consequences of an accident previously evaluated.
2. Create the possibility of a new or different kind of accident from any previously analyzed.
3. Involve a significant reduction in a margin of safety.

Based on the considerations contained herein, it is concluded that there is reasonable assurance that operation of the Yankee plant, consistent with the proposed Technical Specifications, will not endanger the health and safety of the public. This proposed change has been reviewed by the Nuclear Safety Audit and Review Committee.

The licensee's analysis pertaining to the fourth proposed change, contained in the March 11, 1988 letter, states the following:

This proposed change is administrative in nature and as such would not:

1. Involve a significant increase in the probability or consequences of an accident previously evaluated. Since all existing operating restrictions would remain intact, there could not be any significant increase in the probability or consequences of an accident previously evaluated.
2. Create the possibility of a new or different kind of accident from any previously evaluated. The administrative relocation of the organization charts does not create the possibility of a new or different kind of accident from those previously evaluated.
3. Involve a significant reduction in a margin of safety. The deletion of organization figures from the Technical Specification does not involve a significant reduction in a margin of safety.

Based on the considerations contained herein, it is concluded that there is reasonable assurance that operation of the Yankee plant, consistent with the proposed Technical Specifications, will not endanger the health and safety of the public. This proposed change has been reviewed by the Nuclear Safety Audit and Review Committee.

The staff has reviewed the licensee's analysis and agrees with it. Therefore, we conclude that the amendment satisfies the three criteria listed in 10 CFR 50.92. Based on that conclusion the staff proposes to make no significant hazards consideration determination.

Local Public Document Room location: Greenfield Community College, 1 College Drive, Greenfield, Massachusetts 01301.

Attorney for licensee: Thomas Dignan, Esquire, Ropes and Gray, 225 Franklin Street, Boston, Massachusetts 02110.

NRC Project Director: Richard H. Wessman.

PREVIOUSLY PUBLISHED NOTICES OF CONSIDERATION OF ISSUANCE OF AMENDMENTS TO OPERATING LICENSES AND PROPOSED NO SIGNIFICANT HAZARDS CONSIDERATION DETERMINATION AND OPPORTUNITY FOR HEARING

The following notices were previously published as separate individual notices. The notice content was the same as above. They were published as individual notices either because time did not allow the Commission to wait for this biweekly notice or because the action involved exigent circumstances. They are repeated here because the biweekly notice lists all amendments issued or proposed to be issued involving no significant hazards consideration.

For details, see the individual notice in the **Federal Register** on the day and page cited. This notice does not extend the notice period of the original notice.

Nebraska Public Power District, Docket No. 50-298, Cooper Nuclear Station Nemaha County, Nebraska

Date of amendment request: December 14, 1987, as supplemented January 21, 1988.

Brief description of amendment request: The proposed would modify the Technical Specifications to permit the use of fuel assembly and control blade Lead Test Assemblies under the provisions of 10 CFR 50.59. Specifically, during the forthcoming Cycle 11 refueling outage, the licensee, in cooperation with the reactor vendor (General Electric Co.) plans to install two Lead Test Assembly (LTA) control blades and four LTA fuel assemblies of different designs than previously approved for the Cooper Nuclear Station.

Date of publication of individual notice in **Federal Register**: March 1, 1988 (53 FR 6212).

Expiration date of individual notice: March 31, 1988.

Local Public Document Room location: Auburn Public Library, 118 15th Street, Auburn, Nebraska 68305.

NOTICE OF ISSUANCE OF AMENDMENT TO FACILITY OPERATING LICENSE

During the period since publication of the last biweekly notice, the Commission has issued the following amendments. The Commission has determined for each of these amendments that the application complies with the standards and requirements of the Atomic Energy Act of 1954, as amended (the Act), and the Commission's rules and regulations. The Commission has made appropriate findings as required by the Act and the Commission's rules and regulations in 10 CFR Chapter I, which are set forth in the license amendment.

Notice of Consideration of Issuance of Amendment to Facility Operating License and Proposed No Significant Hazards Consideration Determination and Opportunity for Hearing in connection with these actions was published in the **Federal Register** as indicated. No request for a hearing or petition for leave to intervene was filed following this notice.

Unless otherwise indicated, the Commission has determined that these amendments satisfy the criteria for categorical exclusion in accordance with 10 CFR 51.22. Therefore, pursuant to 10 CFR 51.22(b), no environmental impact statement or environmental assessment need be prepared for these amendments. If the Commission has prepared an environmental assessment under the special circumstances provision in 10 CFR 51.12(b) and has made a determination based on that assessment, it is so indicated.

For further details with respect to the action see: (1) The applications for amendments, (2) the amendments, and (3) the Commission's related letters, Safety Evaluations and/or Environmental Assessments as indicated. All of these items are available for public inspection at the Commission's Public Document Room, 1717 H Street, NW., Washington, DC, and at the local public document rooms for the particular facilities involved. A copy of items (2) and (3) may be obtained upon request addressed to the U.S. Nuclear Regulatory Commission, Washington, DC 20555, Attention: Director, Division of Reactor Projects.

Arizona Public Service Company et al., Docket Nos. STN 50-529 and STN 50-530, Palo Verde Nuclear Generating Station, Units 2 and 3, Maricopa County, Arizona

Date of application for amendments: September 14, 1987, as supplemented October 1, 1987.

Brief description of amendments: The Amendments revise Section 5.3.1 of the Technical Specifications by increasing the maximum enrichment for reload fuel from 4.0 to 4.05 weight percent U-235.

Date of issuance: March 9, 1988.

Effective date: March 9, 1988.

Amendment Nos.: 18 and 6.

Facility Operating License Nos. NPF-51 and NPF-74: Amendments changed the Technical Specifications.

Date of initial notice in **Federal Register**: December 30, 1987 (52 FR 49219). The Commission's related evaluation of the amendments is contained in a Safety Evaluation dated March 9, 1988.

No significant hazards consideration comments received: No.

Local Public Document Room location: Phoenix Public Library, Business and Science Division, 12 East McDowell Road, Phoenix, Arizona 85004.

Arizona Public Service Company et al., Docket No. STN 50-528 Palo Verde Nuclear Generating Station, Unit 1, Maricopa County, Arizona

Date of application for amendment: August 7, 1987.

Brief description of amendment: The amendment revises the Technical Specifications by making administrative changes in a number of areas in order to be consistent with those areas of the Technical Specifications for Palo Verde, Units 2 and 3.

Date of issuance: March 2, 1988.

Effective date: March 2, 1988.

Amendment No.: 27.

Facility Operating License No. NPF-41: Amendment changes the Technical Specifications.

Date of initial notice in **Federal Register**: September 9, 1987 (52 FR 33998). The Commission's related evaluation of the amendment is contained in a Safety Evaluation dated March 2, 1988.

No significant hazards consideration comments received: No.

Local Public Document Room location: Phoenix Public Library, Business and Science Division, 12 East McDowell Road, Phoenix, Arizona 85004.

Carolina Power & Light Company et al., Docket No. 50-324, Brunswick Steam Electric Plant, Units 2, Brunswick County, North Carolina

Date of application for amendments: November 11, 1987.

Description of amendment: Change chloride intrusion monitor tag number on TS Tables 3.3.5.6-1, 3.3.5.6-2, and 4.3.5.6-1.

Date of issuance: March 15, 1988.

Effective date: March 15, 1988.

Amendment No.: 145.

Facility Operating License Nos. DPR-71 and DPR-62. Amendment revises the Technical Specifications.

Date of initial notice in **Federal Register**: January 27, 1988 (53 FR 2311) The Commission's related evaluation of the amendments is contained in a Safety Evaluation dated March 15, 1988.

No significant hazards consideration comments received: No.

Local Public Document Room location: University of North Carolina at Wilmington, William Madison Randall Library, 601 S. College Road, Wilmington, North Carolina 28403-3297.

Cleveland Electric Illuminating Company, Duquesne Light Company, Ohio Edison Company, Pennsylvania Power Company, Toledo Edison Company, Docket No. 50-440, Perry Nuclear Power Plant, Unit No. 1, Lake County, Ohio

Date of application for amendment: December 16, 1986, and September 11, 1987.

Brief description of amendment: The amendment modified paragraph 2.E of the license to require compliance with the amended Physical Security Plan. This plan was amended to conform to the requirements of 10 CFR 73.55. Consistent with the provisions of 10 CFR 73.55, search requirements must be implemented within 60 days and miscellaneous amendments within 180 days from the effective date of this amendment.

Date of issuance: March 15, 1988.

Effective date: March 15, 1988.

Amendment No.: 11.

Facility Operating License No. NPF-56. This amendment revised the license.

Date of initial notice in **Federal Register**: February 10, 1988 (53 FR 3951 and 3961). The Commission's related evaluation of the amendment is contained in a letter to Cleveland Electric Illuminating Company dated March 15, 1988 and a Safeguards Evaluation Report dated March 15, 1988.

No significant hazards consideration comments received: No.

Local Public Document Room location: Perry Public Library, 3753 Main Street, Perry, Ohio 44081.

Commonwealth Edison Company, Docket Nos. 50-373 and 50-374, LaSalle County Station, Units 1 and 2, LaSalle County, Illinois

Date of application for amendments: November 9, 1987.

Brief description of amendments: These amendments revise the LaSalle County Station, Units 1 and 2 Technical Specifications to conform with the LER Rule, 10 CFR 50.73.

Date of issuance: March 16, 1988.

Effective date: Forty-five days following date of issuance.

Amendment No.: 56 and 37.

Facility Operating License Nos. NPF-11 and NPF-18: Amendments revised the Technical Specifications.

Date of initial notice in **Federal Register**: December 30, 1987 (52 FR 49221). The Commission's related evaluation of the amendment is contained in a Safety Evaluation dated March 16, 1988.

No significant hazards consideration comments received: No.

Local Public Document Room location: Public Library of Illinois, Valley Community College, Rural Route No. 1, Oglesby, Illinois 61348.

Consumers Power Company, Docket No. 50-255, Palisades Plant, Van Buren County, Michigan

Date of application for amendment: September 28, 1984, as supplemented June 5, September 15, and December 17, 1987.

Brief description of amendment: This amendment revised the Technical Specifications to modify the inservice inspection program for the steam generators to be more consistent with the NRC Standard Technical Specifications and provide additional inspection requirements, techniques and criteria for an improved ability to identify and isolate degraded tubes.

Date of issuance: March 24, 1988.

Effective date: March 24, 1988.

Amendment No.: 112.

Provisional Operating License No. DPR-20. The amendment revised the Technical Specifications.

Date of initial notice in **Federal Register**: September 28, 1984 (50 FR 20975) and July 1, 1987 (52 FR 24546). Since the date of the initial notices in the **Federal Register**, the licensee has provided supplemental information and modified proposals dated September 15, and December 17, 1987. This information and modified proposals were made to be more consistent with NRC Standard Technical Specifications, the objective stated in the initial notice, and did not change the initial determination, thus not warranting a renotice.

The Commission's related evaluation of the amendment is contained in a Safety Evaluation dated March 24, 1988. No significant hazards consideration comments received: No.

Local Public Document Room location: Van Zoeren Library, Hope College, Holland, Michigan 49423.

Dairyland Power Cooperative, Docket No. 50-409, La Crosse Boiling Water Reactor, La Crosse, Wisconsin

Date of application for amendment: August 21, 1987 as revised August 28, 1987.

Brief description of amendment: This amendment revises the Technical Specifications (TS) to delete requirements for Type A, integrated leak rate testing of the containment building at the permanently shutdown La Crosse facility. Also, an exemption grants relief from 10 CFR Part 50.54(o) and Part 50 Appendix J with respect to the above Type A testing.

Date of issuance: March 15, 1988.

Effective Date: March 15, 1988.

Amendment No.: 59.

Facility License No. DPR-45. This Amendment revised the Technical Specifications.

Date of initial notice in **Federal Register**: September 23, 1987 (52 FR 35790). The Commission's related evaluation of the amendment is contained in a Safety Evaluation dated March 15, 1988.

No significant hazards consideration comments received: No.

Local Public Document Room location: La Crosse Public Library, 800 Main Street, La Crosse, Wisconsin 54601.

Detroit Edison Company, Docket No. 50-341, Fermi-2, Monroe County, Michigan

Date of application for amendment: January 15, 1988, as supplemented February 24, 1988.

Brief description of amendment: This amendment revises the Fermi-2 Technical Specifications to allow the low pressure coolant injection (LPCI) system cross-tie valve to be placed in the closed position during plant shutdown. Closure of the cross-tie valve is necessary to isolate a LPCI subsystem for maintenance.

Date of issuance: March 14, 1988.

Effective date: March 14, 1988.

Amendment No.: 15.

Facility Operating License No. NPF-43. The amendment revises the Technical Specifications.

Date of initial notice in **Federal Register**: February 10, 1988 (53 FR 3954). The Commission's related evaluation of the amendment is contained in a Safety Evaluation dated March 14, 1988.

No significant hazards consideration comments received: No.

Local Public Document Room location: Monroe County Library System, 3700 South Custer Road, Monroe, Michigan 48161.

Detroit Edison Company, Docket No. 50-341, Fermi-2, Monroe County, Michigan

Date of application for amendment: February 4, 1986, June 7, 1986, and July 13, 1987.

Brief description of amendment: This amendment revises the Fermi-2 Technical Specification (TS) Table 3.6.3-1, entitled "Primary Containment Isolation Valves" to delete isolation valve numbers T50-F406A and T50-F406B from the Primary Containment Monitoring System (PCMS). The PCMS is used to continuously monitor hydrogen and oxygen concentrations in the containment drywell during a loss-of-coolant accident (LOCA) and during the post-LOCA period. Isolation valves T50-F406A and T50-F406B are remote-manual isolation valves used in the system. As a result of PCMS design modification performed to meet the Commission's environmental qualification requirements, these valves are no longer required. The sample line in which these valves are installed is to be permanently sealed closed by weld-capping in accordance with ASME Code requirements once the T50-F406A and T50-F406B valves are physically removed.

Date of issuance: March 21, 1988.

Effective date: March 21, 1988.

Amendment No.: 16.

Facility Operating License No. NPF-43. The amendment revises the Technical Specifications.

Date of initial notice in **Federal Register**: December 30, 1986 (51 FR 47078). The Commission's related evaluation of the amendment is contained in a Safety Evaluation dated March 21, 1988.

No significant hazards consideration comments received: No.

Local Public Document Room location: Monroe County Library System, 3700 South Custer Road, Monroe, Michigan 48161.

Duke Power Company et al., Docket Nos. 50-413 and 50-414, Catawba Nuclear Station, Units 1 and 2, York County, South Carolina

Date of application for amendments: February 10, 1988.

Brief description of amendments: The amendments modified the Technical

Specifications to reduce the required Reactor Coolant System total flow from 396,100 gpm to 387,600 gpm.

Date of issuance: March 21, 1988.

Effective date: March 21, 1988.

Amendment Nos.: 42 and 35.

Facility Operating License Nos. NPF-35 and NPF-52. Amendments revised the Technical Specifications.

Date of initial notice in **Federal Register:** February 17, 1988 (53 FR 4793). The Commission's related evaluation of the amendments is contained in a Safety Evaluation dated March 21, 1988.

No significant hazards consideration comments received: No

Local Public Document Room location: York County Library, 138 East Black Street, Rock Hill, South Carolina 29730.

Duquesne Light Company, Docket No. 50-334, Beaver Valley Power Station, Unit No. 1, Shippingport, Pennsylvania

Date of application for amendment: November 20, 1987.

Brief description of amendment: The amendment changes the Technical Specifications for Beaver Valley Unit No. 1 to reflect the NRC Staff's technical position on certain radioactive effluent specifications. The revision would bring Unit 1's specifications into conformance with the same of Unit 2, and with the Westinghouse Standard Technical Specifications.

Date of issuance: March 14, 1988.

Effective date: March 14, 1988.

Amendment No.: 121.

Facility Operating License No. DPP-66. Amendment revised the Technical Specifications.

Date of initial notice in **Federal Register:** December 30, 1987 (52 FR 49226). The Commission's related evaluation of the amendment is contained in a Safety Evaluation dated March 14, 1988.

No significant hazards consideration comments received: No.

Local Public Document Room location: B.F. Jones Memorial Library, 663 Franklin Avenue, Aliquippa, Pennsylvania 15001.

Duquesne Light Company, Docket No. 50-334, Beaver Valley Power Station, Unit No. 1, Shippingport, Pennsylvania

Date of application for amendment: July 1, 1987 and supplemented by letter dated October 26, 1987.

Brief description of amendment: The amendment changes the Technical Specifications regarding voltage requirement for the station batteries, and was issued in partial response to the licensee's request.

Date of issuance: March 21, 1988.

Effective date: March 21, 1988.

Amendment No.: 122.

Facility Operating License No. DPR-66. Amendment revised the Technical Specifications.

Date of initial notice in **Federal Register:** August 12, 1987 (52 FR 29915). (The licensee's October 26, 1987 letter provided supplemental information to the part not covered by this amendment. That part of the request has been denied.) The Commission's related evaluation of the amendment is contained in a Safety Evaluation dated March 21, 1988.

No significant hazards consideration comments received: No.

Local Public Document Room location: B.F. Jones Memorial Library, 663 Franklin Avenue, Aliquippa, Pennsylvania 15001.

Florida Power and Light Company et al., Docket No. 50-389, St. Lucie Plant, Unit No. 2, St. Lucie County, Florida

Date of application of amendment: October 17, 1986, as supplemented July 15, 1987.

Brief description of amendment: The amendment (1) Changed the auxiliary feedwater actuation values for steam generator steam line differential pressure and feedwater differential pressure; (2) changed the auxiliary feedwater actuation title under low steam generator water level conditions; (3) deleted auxiliary feedwater initiation and feedwater isolation response times associated with feedwater header and steam generator differential pressures; and (4) changed various operability and surveillance requirements associated with the above.

Date of Issuance: March 22, 1988.

Effective Date: March 22, 1988.

Amendment No.: 28.

Facility Operating License No. NPF-16: Amendment revised the Technical Specifications.

Date of initial notice in **Federal Register:** December 3, 1986 (51 FR 43680). Additional information was submitted by the licensee by letter dated July 15, 1987. The additional information did not change, in any way, the staff's proposed no significant hazards consideration determination. The Commission's related evaluation of the amendment is contained in a Safety Evaluation dated March 22, 1988.

No significant hazards consideration comments received: No.

Local Public Document Room location: Indian River Junior College Library, 3209 Virgina Avenue, Ft. Pierce, Florida.

General Public Utilities Nuclear Corporation, Docket No. 50-320, Three Mile Island Nuclear Station Unit 2 (TMI-2), Dauphin County, Pennsylvania

Date of amendment request: May 16, 1986.

Brief description of amendment: The amendment revised the Technical Specifications by modifying the Appendix B Technical Specifications Section 3.2.1, 3.2.2, 3.2.3, and 5.6. Specifically, the proposed amendment (1) Modifies the radiological environmental monitoring program to be consistent with the Standard Radiological Effluent Technical Specification for Pressurized Water Reactors (Draft NUREG-0472, Revision 3, 1983) and the Technical Specifications for the Three Mile Island Nuclear Generating Station, Unit 1 (TMI-1) located on the same site as TMI-2 (2) modifies the station reporting requirements to be consistent with the guidance of draft Standard Radiological Effluent Technical Specifications for Pressurized Water Reactors (NUREG-0472, Revision 3, 1983) and the TMI-1 Technical Specifications (3) corrects typographical errors and makes editorial changes which improve clarity in the specifications, and (4) deletes non-essential monitoring requirements.

Date of issuance: March 17, 1988.

Effective date: March 17, 1988.

Amendment No.: 29.

Facility Operating License No. DPR-61. Amendment revised the Technical Specifications.

Date of initial notice in **Federal Register:** October 21, 1987 (52 FR 39299). The Commission's related evaluation of the amendment is contained in a Safety Evaluation dated March 17, 1988.

No significant hazards consideration comments received: No.

Local Public Document Room location: State Library of Pennsylvania, Government Publications Section, Education Building, Commonwealth and Walnut Streets, Harrisburg, Pennsylvania 17126.

Georgia Power Company, Oglethorpe Power Corporation, Municipal Electric Authority of Georgia, City of Dalton, Georgia, Docket No. 50-366, Edwin I. Hatch Nuclear Plant, Unit 2, Appling County, Georgia

Date of application for amendment: January 4, 1988.

Brief description of amendment: The amendment modified the Technical Specifications to permit hydrostatic and leak testing with a non-critical reactor core.

Date of issuance: March 12, 1988.

Effective date: March 12, 1988.
Amendment No.: 91.
Facility Operating License No. NPF-5. Amendment revised the Technical Specifications.
Date of initial notice in **Federal Register**: February 10, 1988 (53 FR 3955). The Commission's related evaluation of the amendment is contained in a Safety Evaluation dated March 12, 1988.
No significant hazards consideration comments received: No.
Local Public Document Room location: Appling County Public Library, 301 City Hall Drive, Baxley, Georgia 31513.

GPU Nuclear Corporation et al., Docket No. 50-219, Oyster Creek Nuclear Generating Station, Ocean County, New Jersey

Date of application for amendment: January 19, 1988.
Brief description of amendment: The amendment revises the Technical Specifications to incorporate (1) New pressure-temperature (P-T) operating curves for operation beyond 10 effective full power years (EFPY) and (2) requirements of material surveillance specimens and neutron flux monitors. A definition of Reactor Vessel Pressure Testing and the testing conditions is also added to the Technical Specifications.
Date of Issuance: March 21, 1988.
Effective date: March 21, 1988.
Amendment No.: 120.
Provisional Operating License No. DPR-50. Amendment revised the Technical Specifications.
Date of initial notice in **Federal Register**: February 17, 1988 (53 FR 2316). The Commission's related evaluation of this amendment is contained in a Safety Evaluation dated March 21, 1988.
No significant hazards consideration comments received: No.
Local Public Document Room location: Ocean County Library, Reference Department, 101 Washington Street, Toms River, New Jersey 08753.

GPU Nuclear Corporation et al., Docket No. 50-289, Three Mile Island Nuclear Station, Unit No. 1, Dauphin County, Pennsylvania

Date of application for amendment: July 28, 1987, (as Supplemented December 21, 1987 supersedes a September 9, 1986 request in its entirety).
Brief description of amendment: Revises Technical Specifications to be more consistent with the Standard Radiological Effluent Technical Specifications.
Date of Issuance: March 22, 1988.
Effective date: March 22, 1988.
Amendment No.: 137.
Facility Operating License No. DPR-50. Amendment revised the Technical Specifications.
Date of initial notice in **Federal Register**: September 9, 1987 (52 FR 34006). The December 21, 1987 letter which provided supplemental information in response to a staff request, did not change the initial determination of no significant hazards consideration. The Commission's related evaluation of this amendment is contained in a Safety Evaluation dated March 22, 1988.
No significant hazards consideration comments received: No.
Local Public Document Room location: Government Publications Section, State Library of Pennsylvania, Education Building, Commonwealth and Walnut Streets, Harrisburg, Pennsylvania, 17126.

Illinois Power Company, etc., Docket No. 50-461, Clinton Power Station, Unit 1, DeWitt County, Illinois

Date of application for amendment: December 10, 1987, as supplemented January 29, 1988.
Brief description of amendment: Specified valve local leak rate tests (LLRTs) have been extended until the first refueling outage, currently scheduled to be initiated in January of 1989.
Date of issuance: March 18, 1988.
Effective date: March 18, 1988.
Amendment No.: 1.
Facility Operating License No. NPF-62. Amendment revised the Technical Specification.
Date of initial notice in **Federal Register**: February 10, 1988 (53 FR 3966). The Commission's related evaluation of the amendment is contained in a Safety Evaluation dated March 18, 1988.
No significant hazards consideration comments received: No.
Local Public Document Room location: Vespasian Warner Public Library, 120 West Johnson Street, Clinton, Illinois 61727.

Illinois Power Company, Docket No. 50-461, Clinton Power Station, Unit 1, DeWitt County, Illinois.

Date of application for amendment: October 30, 1987.
Description of amendment request: Test connections will be added upstream of certain excess flow check valves in order to facilitate the testing of these valves.
Date of issuance: March 21, 1988.
Effective date: March 21, 1988.
Amendment No.: 2.
Facility Operating License No. NPF-62. Amendment revised the Technical Specifications.
Date of initial notice in **Federal Register**: January 27, 1988 (53 FR 2320). The Commission's related evaluation of the amendment is contained in a Safety Evaluation dated March 21, 1988.
Local Public Document Room location: The Vespasian Warner Public Library, 120 West Johnson Street, Clinton, Illinois 61727.

Louisiana Power and Light Company, Docket No. 50-382, Waterford Steam Electric Station, Unit 3, St. Charles Parish, Louisiana

Date of amendment request: October 8, 1987.
Brief description of amendment: The amendment revised the Technical Specifications by revising the time limits for monitoring linear heat rate and departure from nucleate boiling ratio using the core protection calculators when the core operating limit supervisory system is inoperable.
Date of issuance: March 21, 1988.
Effective date: March 21, 1988.
Amendment No.: 32.
Facility Operating License No. NPF-38: Amendment revised the Technical Specifications.
Date of initial notice in **Federal Register**: December 16, 1987 (52 FR 47787). The Commission's related evaluation of the amendment is contained in a Safety Evaluation dated March 21, 1988.
No significant hazards consideration comments received: No.
Local Public Document Room location: University of New Orleans Library, Louisiana Collection, Lakefront, New Orleans, Louisiana 70122.

Louisiana Power and Light Company, Docket No. 50-382, Waterford Steam Electric Station, Unit 3, St. Charles Parish, Louisiana

Date of amendment request: August 28, 1987.
Brief description of amendment: The amendment revised the Technical Specifications by changing the limiting conditions for operation or shutdown margin with the control element assemblies (CEAs) withdrawn and with the CEAs inserted.
Date of issuance: March 21, 1988.
Effective date: March 21, 1988.
Amendment No.: 33.
Facility Operating License No. NPF-38: Amendment revised the Technical Specifications.
Date of initial notice in **Federal Register**: December 16, 1987 (52 FR 47786). The Commission's related evaluation of the amendment is contained in a Safety Evaluation dated March 21, 1988.

No significant hazards consideration comments received: No.

Local Public Document Room location: University of New Orleans Library, Louisiana Collection, Lakefront, New Orleans, Louisiana 70122.

Niagara Mohawk Power Corporation, Docket No. 50-220, Nine Mile Point Nuclear Station, Unit No. 1, Oswego County, New York

Date of application for amendment: July 8, 1987.

Brief description of amendment: This amendment revises the Technical Specification 3.2.2, *Minimum Reactor Vessel Temperature for Pressurization,* and the associated Bases. The change was necessary because of measured nil-ductility temperature shifts of irradiated vessel material samples.

Date of issuance: March 15, 1988.

Effective date: March 15, 1988.

Amendment No.: 95.

Facility Operating License No. DPR-63: Amendment revised the Technical Specifications and associated Bases.

Date of initial notice in **Federal Register:** September 9, 1987 (52 FR 34015). The Commission's related evaluation of the amendment is contained in a Safety Evaluation dated March 15, 1988.

No significant hazards consideration comments received: No.

Local Public Document Room location: Reference and Documents Department, Penfield Library, State University of New York, Oswego, New York 13126.

Northeast Nuclear Energy Company, et al., Docket No. 50-245, Millstone Nuclear Power Station Unit No. 1, New London County, Connecticut

Date of application for amendment: May 15, 1987.

Brief description of amendment: The technical specification change would delete Tables 3.6.1.a and 3.6.1.b, the listings of safety-related hydraulic and mechanical snubbers, respectively, and make changes to the testing ard surveillance of snubbers.

Date of issuance: March 17, 1988.

Effective date: March 17, 1988.

Amendment No.: 15.

Facility Operating License No. NPF-21: Amendment revised the Technical Specifications.

Date of initial notice in **Federal Register:** July 15, 1987 (52 FR 26590). The Commission's related evaluation of the amendment is contained in a Safety Evaluation dated.

No significant hazards consideration comments received: No.

Local Public Document Room location: Waterford Public Library, 49 Rope Ferry Road, Waterford, Connecticut 06385.

Philadelphia Electric Company, Docket No. 5C-352, Limerick Generating Station, Unit 1, Montgomery County, Pennsylvania

Date of application for amendment: March 23, 1987.

Brief description of amendment: This amendment revised the Technical Specifications (TSs) to include consideration of wind speed during verification of reactor enclosure secondary containment integrity.

Date of issuance: March 10, 1988.

Effective date: March 10, 1988.

Amendment No.: 8.

Facility Operating License No. NPF-39. This amendment revised the Technical Specifications.

Date of initial notice in **Federal Register:** July 29, 1987 (52 FR 28384) The Commission's related evaluation of the amendment is contained in a Safety Evaluation dated March 10, 1988.

No significant hazards consideration comments received: No.

Local Public Document Room location: Pottstown Public Library, 500 High Street, Pottstown, Pennsylvania 19464.

Sacramento Municipal Utility District, Docket No. 50-312, Rancho Seco Nuclear Generating Station, Sacramento County, California

Date of application for amendment: October 1, 1987, as supplemented November 25, and December 3, 1987.

Brief description of amendment: The amendment incorporates changes which were compiled during an overall review of the technical Specifications. The changes modify various sections of the technical specifications to make them more closely resemble the Babcock and Wilcox Standard Technical Specifications.

Date of issuance: March 15, 1988.

Effective date: Within 30 days of issuance or prior to reactor criticality following the 1986/87 outage, whichever occurs first.

Amendment No.: 97.

Facility Operating License No. DPR-54: Amendment revised the Technical Specifications.

Date of initial notice in **Federal Register:** December 16, 1987 (52 FR 47792) The Commission's related evaluation of the amendment is contained in a Safety Evaluation dated March 15, 1988. The letters of November 25 and December 3, 1987 provided supplemental information which did not change the initial proposed determination of no significant hazards.

No significant hazards consideration comments received: No.

Local Public Document Room location: Sacramento City-County Library, 828 I Street, Sacramento, California 95814.

Toledo Edison Company and The Cleveland Electric Illuminating Company, Docket No. 50-346, Davis-Besse Nuclear Power Station, Unit No. 1, Ottawa County, Ohio

Date of application for amendment: September 29, 1987.

Brief description of amendment: This amendment revised the TSs to permit an extension of the range of the Reactor Coolant System (RCS) Pressure instrument on the Auxiliary Shutdown Panel to 3000 psig from 2500 psig. The change revises Specification 3.3.3.5, Table 3.3-9, Item 3 to have a range of 0 psig to 3000 psig.

Date of issuance: March 14, 1988.

Effective date: March 14, 1988.

Amendment No.: 110.

Facility Operating License No. NPF-3. Amendment revised the Technical Specifications.

Date of initial notice in **Federal Register:** February 10, 1988 (53 FR 3961). The Commission's related evaluation of the amendment is contained in a Safety Evaluation dated March 14, 1988.

No significant hazards consideration comments received: No.

Local Public Document Room location: University of Toledo Library, Documents Department, 2801 Bancroft Avenue, Toledo, Ohio 43606.

Union Electric Company, Docket No. 50-483, Callaway Plant, Unit 1, Callaway County, Missouri

Date of application for amendment: December 15, 1987.

Brief description of amendment: The amendment revised Technical Specification Figures 6.2-1 and 6.2-2 and Section 6.5.1 to reflect nuclear function organizational changes associated with the establishment of the positions of Manager, Licensing and Fuels, and Assistant Manager, Work Control, and the elimination of the Assistant Manager, Support Services, position and the resulting changes in the operating organization, engineering organization and On-Site Review Committee.

Date of issuance: January 29, 1988.

Effective date: January 29, 1988.

Amendment No.: 32.

Facility Operating License No. NPF-30. Amendment revised the Technical Specifications.

Date of initial notice in **Federal Register:** December 30, 1987 (52 FR 49217 at 49233). The Commission's related

evaluation of the amendment is contained in a Safety Evaluation dated January 29, 1988.

No significant hazards consideration comments received: No.

Local Public Document Room location: Callaway County Public Library, 710 Court Street, Fulton, Missouri 65251 and the John M. Olin Library, Washington University, Skinker and Lindell Boulevards, St. Louis, Missouri 63130.

Virginia Electric and Power Company et al., Docket Nos. 50-338 and 50-339, North Anna Power Station, Units No. 1 and No. 2, Louisa County, Virginia

Date of application for amendments: June 1, 1987.

Brief description of amendments: The amendment changed NA-1&2 TS 3/4.4.8, B3/4.4.8, 6.9.1.5.c, and 6.9.2.f, which are associated with primary coolant specific activity limits, in order to comply with NRC Generic Letter 85-19, "Reporting Requirements on Primary Coolant Iodine Activity."

Date of issuance: March 11, 1988.

Effective date: March 11, 1988.

Amendment Nos.: 96 and 83.

Facility Operating License Nos. NPF-4 and NPF-7: Amendments revised the Technical Specifications.

Date of initial notice in **Federal Register:** July 15, 1987 (52 FR 26601) The Commission's related evaluation of the amendments is contained in a Safety Evaluation dated March 11, 1988.

No significant hazards consideration comments received: No.

Local Public Document Room locations: Board of Supervisors Office, Louisa County Courthouse, Louisa, Virginia 23093, and the Alderman Library, Manuscripts Department, University of Virginia, Charlottesville, Virginia 22901.

Virginia Electric and Power Company, Docket Nos. 50-280 and 50-281, Surry Power Station, Unit Nos. 1 and 2, Surry County, Virginia

Date of applications for amendments: April 23, 1987 and May 29, 1987.

Brief description of amendments: The amendments include the core exit thermocouple (CET) system in the accident monitoring instrumentation listed in Tables 3.7-6 and 4.1-2 of the Surry Technical Specifications. The changes address the CET requirements of NUREG-0737, Item II.F.2, "Instrumentation for Detection of Inadequate Core Cooling." In addition, minor editorial changes were made in both of the above tables to reflect the consolidation of the CET system along with the already existing subcooling margin monitor (SMM) and the reactor vessel level indicating system (RVLIS) into one system called the inadequate core cooling monitor. In addition, the amendment revised Table 3.21-1 of the Surry Technical Specifications by adding two additional smoke detectors to the listing for the auxiliary building general area.

Date of issuance: March 15, 1988.

Effective date: March 15, 1988.

Amendment Nos. 118 and 118.

Facility Operating License Nos. DPR-32 and DPR-37: Amendments revised the Technical Specifications.

Date of initial notice in **Federal Register:** September 23, 1987 (52 FR 35809 and 52 FR 35812). The Commission's related evaluation of the amendment is contained in a Safety Evaluation dated March 15, 1988.

No significant hazards consideration comments received: No.

Local Public Document Room location: Swem Library, College of William and Mary, Williamsburg, Virginia 23185.

Wisconsin Public Service Corporation, Docket No. 50-305, Kewaunee Nuclear Power Plant, Kewaunee County, Wisconsin

Date of application for amendment: October 8, 1987.

Brief description of amendment: The amendment revised the Technical Specifications covering the low frequency trip setpoints for the reactor coolant pump motor breakers and made a minor editorial change. Specifically, for the reactor coolant pump motor breakers, the low frequency trip setpoints were changed from 57.5 Hz to 55.0 Hz.

Date of issuance: March 14, 1988.

Effective date: March 14, 1988.

Amendment No.: 77.

Facility Operating License No. NPF-30. Amendment revised the Technical Specifications.

Date of initial notice in **Federal Register:** February 10, 1988 (53 FR 3961). The Commission's related evaluation of the amendment is contained in a Safety Evaluation dated March 14, 1988.

No significant hazards consideration comments received: No.

Local Public Document Room location: University of Wisconsin Library Learning Center, 2420 Nicolet Drive, Green Bay, Wisconsin 54301.

Wisconsin Public Service Corporation, Docket No. 50-305, Kewaunee Nuclear Power Plant, Kewaunee County, Wisconsin

Date of application for amendment: February 5, 1988.

Brief description of amendment: The amendment added a paragraph 2.C.(6), to the Kewaunee Nuclear Power Plant (KNPP) operating license to allow a plant modification to the steam generator upper lateral support snubbers. The modification involves reducing the number of snubbers on the SG upper lateral supports from four to one based on application of "leak-before-break" technology as permitted by revised General Revision Criterion 4.

Date of issuance: March 18, 1988.

Effective date: March 18, 1988.

Amendment No.: 78.

Facility Operating License No. NPF-30. Amendment revised the License.

Date of initial notice in **Federal Register:** February 16, 1988 (53 FR 4479). The Commission's related evaluation of the amendment is contained in a Safety Evaluation dated March 18, 1988.

No significant hazards consideration comments received: No.

Local Public Document Room location: University of Wisconsin Library Learning Center, 2420 Nicolet Drive, Green Bay, Wisconsin 54301.

Dated at Rockville, Maryland, this 31st day of March, 1988.

For the Nuclear Regulatory Commission.

Dennis M. Crutchfield,

Director, Division of Reactor Projects—III, IV, V and Special Projects, Office of Nuclear Reactor Regulation.

[FR Doc. 88-7398 Filed 4-5-88; 8:45 am]

BILLING CODE 7590-01-M

[Docket No. 30-13435, ASLBP No. 88-559-01-SC]

Finlay Testing Laboratories, Inc.; Hearing

March 30, 1988.

Before Administrative Judges: Robert M. Lazo, Chairman, Glenn O. Bright, Richard F. Cole.

Please take notice that an evidentiary hearing in this proceeding shall convene at 10 a.m., local time, Wednesday, May 18, 1988, in Room 3322, U.S. Coast Guard Legal Office, PJKK Federal Building, 300 Ala Moana Boulevard, Honolulu, HI 96850.

The hearing shall be conducted continuously day to day until all evidence on matters outstanding has been received or until continued by further order of the Board.

It is so ordered.

Dated at Bethesda, Maryland, this 30th day of March 1988.

For the Atomic Safety and Licensing Board.

Robert M. Lazo,

Chairman, Administrative Judge.

[FR Doc. 88-7539 Filed 4-5-88; 8:45 am]

BILLING CODE 7590-01-M

[Docket No. STN 50-483]

Union Electric Co.; Issuance of Amendment to Facility Operating License

The U.S. Nuclear Regulatory Commission (the Commission) has issued Amendment No. 35 to Facility Operating License No. NPF-30, issued to Union Electric Company (the licensee) which amended the license and revised the Technical Specifications for operation of the Callaway Plant, Unit 1, located in Callaway County, Missouri. The Amendment was effective as of the date of its issuance.

The amendment revised the license and technical specifications to support an increase in the authorized core thermal power from 3411 MWt to 3565 MWt.

The application for the amendment complies ith the standards and requirements of the Atomic Energy Act of 1954, as amended (the Act), and the Commission's rules and regulations. The Commission has made appropriate findings as required by the Act and the Commission's rules and regulations in 10 CFR Chapter I, which are set forth in the license amendment.

Notice of Consideration of Issuance of Amendment and Opportunity for Prior Hearing in connection with this action was published in the **Federal Register** on June 1, 1987 (52 FR 20481). No request for a hearing or petition for leave to intervene was filed following this notice.

For further details with respect to this action, see (1) the application for amendment dated March 31, 1987, as supplemented April 21, September 18, October 7, October 23, and November 13, 1987; (2) Amendment No. 35 to Facility Operating License No. NPF-30; (3) the Commission's related Safety Evaluation dated March 30, 1988; and (4) the Environmental Assessment dated February 17, 1988 (53 FR 5331). All of these items are available for public inspection at the Commission's Public Document Room, 1717 H Street NW., Washington, DC, and at the Callaway County Public Library, 710 Court Street, Fulton, Missouri 65251 and the John M. Olin Library, Washington University, Skinker and Lindell Boulevards, St. Louis, Missouri 63130. A copy of items (2), (3) and (4) may be obtained upon request addressed to the U.S. Nuclear Regulatory Commission, Washington, DC 20555, Attention: Director, Division of Reactor Projects.

Dated at Rockville, Maryland this 30th day of March 1988.

For the Nuclear Regulatory Commission.

Thomas W. Alexion,

Project Manager, Project Directorate III—3, Division of Reactor Projects-III, IV, V and Special Projects.

[FR Doc. 88-7523 Filed 4-5-88; 8:45 am]

BILLING CODE 7590-01-M

SECURITIES AND EXCHANGE COMMISSION

Forms Under Review by Office of Management and Budget

Agency Clearance Officer: Kenneth A. Fogash (202) 272-2142.

Upon Written Request Copy Available From: Securities and Exchange Commission, Office of Consumer Affairs, Washington, DC 20549.

Extension, Form TA-1, Rule 17Ac2-1(c), 270-95.

Extension, Form TA-2, Rule 17Ac2-2, 270-298.

Notice is hereby given that pursuant to the Paperwork Reduction Act of 1980 (44 U.S.C. 3501 *et seq.*) the Securities and Exchange Commission has submitted a request for extension of OMB approval of Form TA-1 (17 CFR 249b.100), and Rule 17Ac2-1(c) (17 CFR 240.17Ac2-1(c)), both previously having been granted clearance, as well as extension of OMB approval of Form TA-2 and Rule 17Ac2-2 under the Securities Exchange Act of 1934 (15 U.S.C. 78a *et seq.*). Form TA-1 is used by transfer agents to register with the Commission, Comptroller of the Currency, the Board of Governors of the Federal Reserve System or the Federal Deposit Insurance Corporation. Form TA-1 is also used by transfer agents to amend their registration. Part II of Form TA-1, which requires transfer agents to provide certain background information regarding control persons, should only be completed by transfer agents registering directly with the Commission. Rule 17Ac2-1(c) requires a transfer agent to correct information submitted on Form TA-1 which becomes inaccurate, misleading or incomplete within sixty days following the date on which the information became inaccurate, misleading or incomplete. Three hundred fifty respondents incur an estimated burden of 1.57 hours to comply with the requirements of Rule 17Ac2-1 (a) and (c).

Rule 17Ac2-2 requires registered transfer agents to file an annual report of their business activities on Form TA-2. Form TA-2 is to be filed with the transfer agent's appropriate regulatory agency, which would be either the Commission, the Comptroller of the Currency, the Board of Governors of the Federal Reserve System or the Federal Deposit Insurance Corporation. Transfer agents who satisfy the criteria set forth in 17 CFR 240.0-10(h) (restated in Rule 17Ac2-2) would only be required to complete Page One and the execution section of Form TA-2. Twenty-four hundred respondents incur an estimated burden of three hours to comply with the requirements of Rule 17Ac2-2.

Submit comments to OMB Desk Officer: Robert Neal (202) 395-7340, Office of Information and Regulatory Affairs, Room 3228, NEOB, Washington, DC 20503.

Jonathan G. Katz,

Secretary.

April 1, 1988.

[FR Doc. 88-7563 Filed 4-5-88; 8:45 am]

BILLING CODE 8010-01-M

[Release No. 34-25532; File No. SR-Amex-87-30]

Self-Regulatory Organization; Order Approving Proposed Rule Change by the American Stock Exchange, Inc., Relating to Suspension of Employees of Members Who Fail To Pay Disciplinary Fines

On November 17, 1987, the American Stock Exchange, Inc. ("Amex" or "Exchange") submitted to the Securities and Exchange Commission ("Commission") pursuant to section 19(b)(1) under the Securities Exchange Act of 1934 ("Act") and Rule 19b-4 thereunder, a proposed rule change that would amend Rule 345 to permit the Exchange to suspend summarily from association with a member or member organization employees of a member or member organization who fail to pay disciplinary fines. The proposed rule change was noticed in Securities Exchange Act Release No. 25176 (December 7, 1987), 52 FR 47469. No comments were received.

The proposed amendment would permit the Amex to suspend summarily an employee from association with a member or member organization who fails to pay a disciplinary fine within thirty days after it becomes due, but provides that such suspension may only occur after any appeal of the original sanction had been exhausted and the decision had become final. Under the proposed rule such summary suspension will be in effect until the fine is paid.

Article V Section 3(e) of the Amex Constitution currently allows the summary suspension of members and member organizations for non-payment of fines assessed against them. It does

not, however, provide for the summary suspension of an employee's association with a member or member organization for failure to pay fines which are subsequently levied. Thus, where an employee of a member or member organization fails to pay a fine, a second disciplinary proceeding must be initiated, with a formal hearing and full appeal. In its filing, the Amex claims the inability to suspend employees of members who fail to pay disciplinary fines undermines the effectiveness of the Exchange's disciplinary sanctions. Amex has established certain notice procedures concerning the ability to suspend summarily an employee under the proposed rule.[1] The initial decision letter will inform the respondent about the determination and penalty levied against him, the rights to appeal under Amex and Commission rules, and that if he fails to pay the fine within 30 days after it becomes due, he may, after written notice, be summarily suspended from association with his member firm.[2] If the fine is 30 days overdue after the decision becomes final (after all appeals and reviews have been taken), the Amex will send an enforcement letter to the respondent informing him that he will be summarily suspended from assoication with his member firm if he fails to pay the fine in 30 days.

The Commission has carefully reviewed the proposal and believes the rule change adequately balances the need to provide due process to employees who are subject to a grievance with the Exchange's need to enforce its sanctions in an efficient manner. It is reasonable for the Amex to extend its summary suspension powers for non-payment of fines that it has for members to employees associated with members. As noted above, summary action for enforcement of non-payment of fines under the proposed rule could only take place after all appeals under Amex rules and the Act have been exhausted and the decision imposing the sanction is final. Amex procedures should also ensure that adequate notice is given to respondents that could be subject to such a summary suspension under the proposed rule. Based on the above, the Commission finds that the proposed rule change is consistent with the requirements of the Act and the rules and regulations thereunder applicable to a national securities exchange and, in particular, the requirements of Section 6 and the rules and regulations thereunder.

It Is Therefore Ordered, pursuant to section 19(b)(2) of the Act, that proposed rule change (File No. SR-Amex-87-30) be, and hereby is, approved.

For the Commission, by the Division of Market Regulation, pursuant to delegated authority.

Dated: March 30, 1988.

Jonathan G. Katz,

Secretary.

FR Doc. 88-7498 Filed 4-5-88; 8:45 am]

BILLING CODE 8010-01-M

[1] *See* letter from J. Bruce, Ferguson, Assistant Vice President, Amex, to Sharon Lawson, Branch Chief, SEC dated March 8.

[2] Amex states that if no appeal under Amex or Commission rules are taken, the fine is deemed due at the end of the appeal period when the decision becomes final. If the decision is appealed (or reviewed on its own motion by the Commission) the fine will be deemed due as of the date of the final appeal decision. We note the Amex Constitution provides 20 days to appeal a decision to the Board of Governors. Pursuant to section 19(d) of the Act, this 20 day period is followed by the right to appeal to the Commission within 30 days after notice of final disciplinary action has been filed with the Commission. The Commission also has the right to review decisions by self-regulatory organizations on its own motion under section 19(d) of the Act.

[Release No. 34-25542; File No. SR-Amex-83-27; Amdt. No. 4]

Self-Regulatory Organizations; Proposed Rule Change by the American Stock Exchange, Inc. Concerning Amendments to its Specialist Unit Evaluation Questionnaire

Pursuant to section 19(b)(1) of the Securities Exchange Act of 1934, ("Act") 15 U.S.C. 78s(b)(1), notice is hereby given that on March 17, 1988, the American Stock Exchange, Inc. ("Amex" or "Exchange") filed with the Securities and Exchange Commission ("Commission") the proposed rule changes as described in Items I, II, and III below, which Items have been prepared by the self-regulatory organization. The Commission is publishing this notice to solicit comments on the proposed rule change from interested persons.

I. Self-Regulatory Organization's Statement of the Terms of Substance of the Proposed Rule Change

The Exchange hereby files for Commission approval changes to its Specialist Unit Evaluation Questionnaire ("Questionnaire") which expand and clarify its content.

II. Self-Regulatory Organization's Statement of the Purpose of, and Statutory Basis for, the Proposed Rule Change

In its filing with the Commission, the self-regulatory organization included statements concerning the purpose of and basis for the proposed rule change and discussed any comments it received on the proposed rule change. The text of these statements may be examined at the places specified in Item IV below. The self-regulatory organization has prepared summaries, set forth in sections (A), (B), and (C) below, of the most significant aspects of such statements.

A. Self-Regulatory Organization's Statement of the Purpose and Statutory Basis for, the Proposed Rule Change

(a) Purpose

In November 1981, the Commission staff ("staff") recommended that the Amex submit to the Commission for approval its procedures for the evaluation of equity specialist performance and for the allocation and reallocation of stocks.[1] The Amex complied with the staff's recommendation and in November, 1983, the Commission published for notice and comments the Amex's equities specialist performance evaluation, allocation, and reallocation procedures.[2] Included in these procedures is the Amex's Questionnaire. The questionnaire is completed, on a quarterly basis, by floor brokers and registered traders who are requested to evaluate a specialist unit's performance in four categories for the preceding three month period. In this filing, the Amex seeks to amend the questionnaire to expand and clarify its contents.[3]

The proposed amendment to the Questionnaire would, among other things, expand from 4 to 26 the number of questions included in the questionnaire and divide the questions into four categories. All questions would be given equal weight. The unit's overall rating will be based on the combined evaluations of the responding brokers using a weighted average of the four categores of questions. In addition, the

[1] *See* letter from Douglas Scarff, Director, Division of Market Regulation, to Robert Birnbaum, President, Amex, dated November 10, 1981.

[2] *See* Securities Exchange Act Release No. 20353 (November 4, 1983) 48 FR 51992, (November 15, 1983). The Amex submitted Amendment No. 1 to the proposal on April 23, 1984; however, due to a number of concerns raised by the amendment, the Commission determined not to publish this amendment for notice and comment, but rather requested the Amex to provide additional amendments to the filing that would address its concerns. The Amex filed amendments number 2 and 3 to the proposal on February 7 and May 20, 1985, respectively. The Commission published these amendments for notice and comments in August, 1985. *See,* Securities Exchange Act Rel. No. 22312 (August 12, 1985) 50 FR 33139.

[3] A copy of the amended specialist unit evaluation questionnaire was included in the filing as Exhibit 3. Copies of the Questionnaire are available from the Commission at the address noted in Section IV below and from the Amex.

proposal would incorporate a new alphabetical rating scale in place of the current numerical rating scale[4] and redesignate the four major areas of performance evaluated on the Questionnaire.[5]

The identity of and specific comments provided by responding members will remain strictly confidential, although no survey is accepted unless it is signed, for validation purposes. Members assigning a 4 or 5 rating to a unit in any category will no longer be required to furnish written comments in support of the rating.

(b) Basis

The proposed rule change is consistent with section 6(b) of the Act in general and furthers the objectives of section 6(b)(5) in particular in that the Exchange's procedures are designed to promote just and equitable principles of trade and protect investors and the public interest.

(B) Self-Regulatory Organization's Statement on Buden on Competition

The Exchange's procedures encourage specialists to compete with each other for the allocation of new issues and the retention of those securities in which they are currently registered. The proposed rule change rewards superior performance and thus promotes and enhances competition among Exchange specialists.

(C) Self-Regulatory Organization's Statement on Comments on the Proposed Rule Change Received from Members, Participants or Others

No written comments were solicited or received with respect to the proposed rule change.

III. Date of Effectiveness of the Proposed Rule Changes and Timing for Commission Action

Within 35 days of the date of publication of this notice in the **Federal Register** or within such longer period (i) as the Commission may designate up to 90 days of such date if it finds such longer period to be appropriate and publishes its reasons for so finding or (ii) as to which the self-regulatory organization consents, the Commission will:

(A) By order approve such proposed rule changes, or

(B) Institute proceedings to determine whether the proposed rule changes should be disapproved.

IV. Solicitation of Comments

Interested persons are invited to submit written data, views and arguments concerning the foregoing. Persons making written submissions should file six copies thereof with the Secretary, Securities and Exchange Commission, 450 Fifth Street, NW., Washington, DC 20549. Copies of the submission, all subsequent amendments, all written statements with respect to the proposed rule changes that are filed with the Commission, and all written communications relating to the proposed rule changes between the Commission and any person, other than those that may be withheld from the public in accordance with the provisions of 5 U.S.C. 552, will be available for inspection and copying in the Commission's Public Reference Section, 450 Fifth Street, NW., Washington, DC. Copies of such filing will also be available for inspection and copying at the principal office of the Amex.

All submissions should refer to the file number in the caption above and should be submitted by April 27, 1988.

For the Commission, by the Division of Market Regulation, pursuant to delegated authority.

Jonathan G. Katz

Secretary.

Dated: March 31, 1988.

[FR Doc. 88-7564 Filed 4-5-88; 8:45 am]

BILLING CODE 8010-01-M

[Release No. 34-25538; File No. PHLX 88-13]

Self-Regulatory Organizations; Proposed Rule Change by the Philadelphia Stock Exchange, Inc. Relating to Introduction of Quarter Point Strikes in French Franc Options

Pursuant to section 19(b)(1) of the Securities Exchange Act of 1934, 15 U.S.C. 78s(b)(1), notice is hereby given that on March 24, 1988 the Philadelphia Stock Exchange, Inc. filed with the Securities and Exchange Commission the proposed rule change as described in Items I, II and III below, which Items have been prepared by the self-regulatory organization. The Commission is publishing this notice to solicit comments on the proposed rule change from interested persons.

I. Self-Regulatory Organization's Statement of the Terms of Substance of the Proposed Rule Change

The Philadelphia Stock Exchange, Inc. ("PHLX" or the "Exchange") proposes to revise certain of its strike price policies to permit the orderly introduction of one quarter point [$.0025] strike price intervals for French franc options contracts.

II. Self-Regulatory Organization's Statement of the Purpose of, and Statutory Basis for, the Proposed Rule Change

In its filing with the Commission, the self-regulatory organization included statements concerning the purpose of and basis for the proposed rule change and discussed any comments it received on the proposed rule change. The text of these statements may be examined at the places specified in Item IV below. The self-regulatory organization has prepared summaries, set forth in sections (A), (B), and (C) below, of the most significant aspects of such statements.

A. Self-Regulatory Organization's Statements of the Purpose of, and Statutory Basis for the Proposed Rule Change

The purpose of the proposed rule change is to reduce maximum strike price intervals in French franc options contracts to one quarter point. In effectuating the proposed rule change, the Exchange does not propose to add quarter point strikes between all existing half point strikes. Rather, to avoid a proliferation of series, the Exchange proposes to add quarter point strikes gradually and only for at-or near-the-money strikes.

The proposal is being made because the French franc has proven to be considerably less volatile in relation to the dollar than the Exchange originally anticipated. As a result, the half point strike price intervals currently in place have been found by investors and broker-dealers to be inadequate to meet their trading needs, particularly for at or near-the-money options. The availability of additional strike prices would enhance the opportunity of market participants in the French franc options to manage and hedge their currency risk more effectively.

There are currently approximately 90 put and call series in both the American and European style foreign currency options on the French franc. While this is a large number of strikes compared to most equity options, it is fewer than most other currency options. The Exchange is mindful of the potential

---

[4] The current 1 through 5 rating system, which ranges from outstanding to weak, would be replaced by A=Always, F=Frequently, S=Satisfactory, O=Occasionally, N=Never. The alphabetical rating (A, F, S, O, N) would be translated into a numerical rating by correlating A to 1, F to 2, S to 3, O to 4, and N to 5. Units receiving a 4 or 5 Questionnaire rating in any quarter will continue to be precluded from applyng for any allocation until its quarterly performance rating has improved.

[5] Under the proposed amendment the 26 questions would be divided into 4 categories evaluating specialist principal obligations, agency/fiduciary obligation, communication function and auction market maintenance.

operational burdens that have resulted from the proliferation of options series in recent months. To minimize any potential burdens of the proposed rule change, the Exchange proposes to introduce quarter point strike prices gradually, to the extent coordinating their introduction with the expiration or removal of current deep-in or deep-out-of-the-money strikes.

The proposed rule change is based on section 6(b)(5) of the Securities Exchange Act of 1934 in that it is designed to facilitate transactions in French franc foreign currency options contracts and to promote the protection of investors and the public interest.

B. Self-Regulatory Organizations Statement on Burden on Competition

The PHLX does not believe that the proposed rule change will impose any inappropriate burden on competition.

C. Self-Regulatory Organization's Statement on Comments on the Proposed Rule Change Received From Members, Participants, or Others

No written comments were either solicited or received.

III. Date of Effectiveness of the Proposed Rule Change and Timing for Commission Action

Within 35 days of the date of publication of this notice in the **Federal Register** or within such longer period (i) as the Commission may designate up to 90 days or such date if it finds such longer period to be appropriate and publishes its reasons for so finding or (ii) as to which the self-regulatory organization consents, the Commission will:

(A) By order approve such proposed rule change, or,

(B) Institute proceedings to determine whether the proposed rule change should be disapproved.

IV. Solicitation of Comments

Interested persons are invited to submit written data, views and arguments concerning the foregoing. Persons making written submissions should file six copies thereof with the Secretary, Securities and Exchange Commission, 450 Fifth Street, NW., Washington, DC 20549. Copies of the submission, all subsequent amendments, all written statements with respect to the proposed rule change that are filed with the Commission, and all written communications relating to the proposed rule change between the Commission and any person, other than those that may be withheld from the public in accordance with the provisions of 5 U.S.C. 552, will be available for inspection and copying in the Commission's Public Reference Section, 450 Fifth Street, NW., Washington, DC 20549. Copies of such filing will also be available for inspection and copying at the principal office of the above-mentioned self-regulatory organization. All submissions should refer to the file number in the caption above and should be submitted by April 27, 1988.

For the Commission by the Division of Market Regulation, pursuant to delegated authority.

Jonathan G. Katz,

Secretary.

Dated: March 31, 1988.

[FR Doc. 88-7499 Filed 4-5-88; 8:45 am]

BILLING CODE 8010-01-M

[Release No. 34-25539; File No. PHLX 88-14]

Self-Regulatory Organizations; Proposed Rule Change by the Philadelphia Stock Exchange, Inc. Relating To Reduction in Minimum Tick Size of British Pound Options

Pursuant to section 19(b)(1) of the Securities Exchange Act of 1934, 15 U.S.C. 78s(b)(1), notice is hereby given that on March 24, 1988 the Philadelphia Stock Exchange, Inc. filed with the Securities and Exchange Commission the proposed rule change as described in Items I, II and III below, which Items have been prepared by the self-regulatory organization. The Commission is publishing this notice to solicit comments on the proposed rule change from interested persons.

I. Self-Regulatory Organization's Statement of the Terms of Substance of the Proposed Rule Change

The Philadelphia Stock Exchange, Inc. ("PHLX" or the "Exchange") proposes to change the minimum fractional change (*i.e.*, minimum premium change for dealing on the Exchange on option contracts on the British pound from $.0005 to $.0001.) The text of the proposed rule change is set forth below. [Brackets] indicate deletions; *italics* indicates additions.

Minimum Fractional Changes

Rule 1034. The minimum fractional change for dealing on the Exchange in option contracts shall be as follows:

(i) In the case of options on stocks, one-eighth point in option contracts trading at $3.00 per share per option or higher, and one-sixteenth point in option contracts trading under $3.00 per share per option.

(ii) In the case of options on foreign currencies, [$.0005] *$.0001* for option contracts on the British pound, $.0001 for option contracts on the German mark, $.0001 for option contracts on the Swiss franc, $.0001 for option contracts on the Canadian dollar, $.0001 for option contracts on the Australian dollar, $.0001 for option contracts on the ECU, $.0005 for option contracts on the French franc and $.000001 for option contracts on the Japanese yen.

II. Self-Regulatory Organization's Statement of the Purpose of, and Statutory Basis for, the Proposed Rule Change

In its filing with the Commission, the self-regulatory organization included statements concerning the purpose of and basis for the proposed rule change and discussed any comments it received on the proposed rule change. The text of these statements may be examined at the places specified in Item IV below. The self-regulatory organization has prepared summaries, set forth in sections (A), (B), and (C) below, of the most significant aspects of such statements.

A. Self-Regulatory Organization's Statements of the Purpose of, and Statutory Basis for the Proposed Rule Change

The purpose of the proposed rule change is to enable market participants trading PHLX listed British pound foreign currency options contracts to more competitively transact business in this product. By decreasing the minimum premium change from the equivalent of $6.25 per tick to $1.25 per tick the PHLX will enable market participants to more effectively trade and hedge their over the counter currency risk with Exchange traded British pound foreign currency options since over the counter British pound currency options are usually transacted on a one tick basis. The ability of the PHLX to offer a one tick minimum premium change in British pound currency options would enable the PHLX to be competitive with the options on futures contracts presently traded on a two tick differential basis on the Chicago Mercantile Exchange. The proposal will impose no operational burdens on member firms or public investors.

The proposed rule change is based on section 6(b)(5) of the Securities

Exchange Act of 1934 in that it is designed to facilitate transactions in British pound foreign currency options contracts.

B. Self-Regulatory Organizations Statement on Burden on Competition

The PHLX does not believe that the proposed rule change will impose any inappropriate burden on competition.

C. Self-Regulatory Organization's Statement on Comments on the Proposed Rule Change Received from Members, Participants, or Others

No written comments were either solicited or received.

III. Date of Effectiveness of the Proposed Rule Change and Timing for Commission Action

Within 35 days of the date of publication of this notice in the **Federal Register** or within such longer period (i) as the Commission may designate up to 90 days or such date if it finds such longer period to be appropriate and publishes its reasons for so finding or (ii) as to which the self-regulatory organization consents, the Commission will:

(A) By order approve such proposed rule change, or,

(B) Institute proceedings to determine whether the proposed rule change should be disapproved.

IV. Solicitation of Comments

Interested persons are invited to submit written data, views and arguments concerning the foregoing. Persons making written submissions should file six copies thereof with the Secretary, Securities and Exchange Commission, 450 Fifth Street, NW., Washington, DC 20549. Copies of the submission, all subsequent amendments, all written statements with respect to the proposed rule change that are filed with the Commission, and all written communications relating to the proposed rule change between the Commission and any person, other than those that may be withheld from the public in accordance with the provisions of 5 U.S.C. 552, will be available for inspection and copying in the Commission's Public Reference Section, 450 Fifth Street, NW., Washington, DC 20549. Copies of such filing will also be available for inspection and copying at the principal office of the above-mentioned self-regulatory organization. All submissions should refer to the file number in the caption above and should be submitted by April 27, 1988.

For the Commission by the Division of Market Regulation, pursuant to delegated authority.

Jonathan G. Katz,

Secretary.

Dated: March 31, 1988.

[FR Doc. 88-7500 Filed 4-5-88; 8:45 am]

BILLING CODE 8010-01-M

[Release No. 34-25540; File No. SR-PHLX-88-10]

Self-Regulatory Organizations; Philadelphia Stock Exchange, Inc.; Filing and Order Granting Accelerated Approval to Proposed Rule Change

On March 9, 1988, the Philadelphia Stock Exchange, Inc. ("Phlx" or Exchange") submitted to the Securities and Exchange Commission ("Commission"), pursuant to section 19(b)(1) under the Securities Exchange Act of 1934 ("Act") [1] and Rule 19b-4 thereunder,[2] a proposed rule change to permit the Exchange to commence operation of its Automated Options market ("AUTOM") system on a pilot basis.

AUTOM, which has been in development for over a year, is an on-line system that allows electronic delivery of options orders from member firms directly to the appropriate specialist on the Phlx options trading floor, with electronic confirmation of order executions. Because all orders received through AUTOM will be exposed to the specialist's limit order book, the trading crowd, and at least one registered options trader ("ROT"),[3] the Exchange believes best execution of AUTOM orders is assured.

All orders entered into the system will be executed manually by the specialist, who, upon execution of the order, will enter the relevant trade information [*e.g.*, the number of contracts executed, the price, and the identity of the contra-broker(s)] into the system. An execution report will then automatically be sent to the firm that placed the orders.

The Exchange states that the AUTOM system, hardware as well as software, is completely separate from and independent of the hardware and software for Phlx's Philadelphia Stock Exchange Automated Communication and Execution ("PACE") system for routing and executing stock orders. The two systems, AUTOM and PACE, are exclusive unto themselves and neither relies on the other for the performance of any function. Because the systems are independent, one system cannot adversely impact on the other during volume surges in terms of volume handling capabilities or queuing.[4]

During the AUTOM pilot, the Phlx has requested Commission authorization to include up to 12 equity options; up to five order entry firms; and up to six specialist units. During the pilot phase, only market orders of five or fewer contracts in the near-term expiration month will be delivered through the system for manual execution.

The Exchange will establish a service desk on the options trading floor to handle AUTOM trade inquiries and status of reports.

The Amex proposes to implement the AUTOM system as a 90-day pilot program, commencing in April 1988. The Exchange, however, requests from the Commission the authority to terminate the program prior to the 90th day or extend the pilot beyond the 90th day upon notice and approval of the Commission.

The Commission finds that the proposed rule change is consistent with the requirements of the Act and the rules and regulations thereunder applicable to a national securities exchange, and, in particular, the requirements of section 6 [5] and section 11A[6] and the rules and regulations thereunder. The Commission believes that the development and implementation of AUTOM will provide for more efficient handling and reporting of orders in Phlx equity options through the use of new data processing and communications techniques, thereby improving order processing and turnaround time. The Commission also believes that the proposed rule change, by offering increased order routing efficiencies, will benefit public customers and Phlx member firms and customers. In addition, because the AUTOM system is completely independent from the PACE system, the Phlx has informed the Commission that neither AUTOM nor the PACE system will impact on the other during periods of high volume. Moreover, the Phlx has informed the Commission that the AUTOM system's order handling and disc capacity at the present time is five times the estimated daily order flow for the pilot, and the AUTOM system

---

[1] 15 U.S.C. 78s(b)(1) (1982).

[2] 17 CFR 240.19b-4 (1987).

[3] Phlx Rule 1063(a) requires an Options Floor Broker to ascertain that at least one ROT is present at the trading post prior to representing an order for execution.

[4] Letter from Michael A. Finnegan, Senior Vice President, Phlx, to Howard L. Kramer, Assistant Director, Commission, dated March 22, 1988.

[5] 15 U.S.C. 78f (1982).

[6] 15 U.S.C. 78k-1 (1982).

capacity could be increased up to five times the current capacity if needed.[7]

The Commission finds good cause for approving the proposed rule change prior to the thirtieth day after the date of publication of the proposal in the **Federal Register** in that the proposed order routing system is substantially identical to order routing systems that have been approved by the Commission and currently are in effect at other securities exchanges.[8] In addition, the pilot is small (limited number of firms) and involves only order routing and reporting. The Phlx has projected that its system will be operational by the first week in April. Accelerated approval of the proposal will enable the start-up of the pilot at that time.

Interested persons are invited to submit written data, views and arguments concerning the foregoing. Persons making written submission should file six copies thereof with the Secretary, Securities and Exchange Commission, 450 Fifth Street NW., Washington, DC 20549. Copies of the submission, all subsequent amendments, all written statements with respect to the proposed rule change that are filed with the Commission, and all written communications relating to the proposed rule change between the Commission and any person, other than those that may be withheld from the public in accordance with the provisions of 5 U.S.C. 552, will be available for inspection and copying in the Commission's Public Reference Section, 450 Fifth Street, NW., Washington, DC. Copies of such filing will also be available for inspection and copying at the principal office of the above-mentioned self-regulatory organization. All submissions should refer to the file number in the caption above and should be submitted by April 27, 1988.

It is therefore ordered, pursuant to section 19(b)(2) of the Act,[9] that the proposed rule change is approved for a 90-day pilot program.[10]

[7] *See* letter from Michael A. Finnegan, Senior Vice President, Phlx, to Howard L. Kramer, Assistant Director, Commission, dated March 30, 1988.

[8] For example, the American Stock Exchange's options routing system, AUTOAMOS, was approved by the Commission in Securities Exchange Act Release No. 21441 (November 6, 1984), 49 FR 44575.

[9] 15 U.S.C. 78s(b)(2) (1982).

[10] The Commission expects that at the conclusion of the 90-day pilot, the Phlx should be able to evaluate the pilot and submit a rule change for final approval with any appropriate modifications, or that the Phlx will submit a rule change extending the pilot beyond the 90th day. The Phlx is authorized to terminate the program prior to the 90th day upon due notice and approval by the Commission.

For the Commission, by the Division of Market Regulation, pursuant to delegated authority.[11]

Jonathan G. Katz,

Secretary.

Dated: March 31, 1988.

[FR Doc. 88-7565 Filed 4-5-88; 8:45 am]

BILLING CODE 8010-01-M

[Release No. 35-24613]

Filings Under the Public Utility Holding Company Act of 1935 ("Act")

March 31, 1988.

Notice is hereby given that the following filing(s) has/have been made with the Commission pursuant to provisions of the Act and rules promulgated thereunder. All interested persons are referred to the application(s) and/or declaration(s) for complete statements of the proposed transaction(s) summarized below. The application(s) and/or declaration(s) and any amendment(s) thereto is/are available for public inspection through the Commission's Office of Public Reference.

Interested persons wishing to comment or request a hearing on the application(s) and/or declaration(s) should submit their views in writing by April 25, 1988 to the Secretary, Securities and Exchange Commission, Washington, DC 20549, and serve a copy on the relevant applicant(s) and/or declarant(s) at the address(es) specified below. Proof of service (by affidavit or, in case of an attorney at law, by certificate) should be filed with the request. Any request for hearing shall identify specifically the issues of fact or law that are disputed. A person who so requests will be notified of any hearing, if ordered, and will receive a copy of any notice or order issued in the matter. After said date, the application(s) and/or declaration(s), as filed or as amended, may be granted and/or permitted to become effective.

Finch, Pruyn & Company, Inc. (31-833)

Finch, Pruyn & Company, Inc. ("Finch, Pruyn"), One Glen Street, Glen Falls, New York, has filed an application for an exemption from the provisions of the Act pursuant to section 3(a)(3) thereof.

Finch, Pruyn's business is primarily that of a regional producer of high-quality, uncoated, free-sheet printing and writing papers. In addition, Finch, Pruyn owns one-third of the voting stock of Moreau Manufacturing Corporation ("Moreau"), which owns and operates hydro-electric facilities that produce electric power for sale. Finch, Pruyn uses its entitlement to one-third of Moreau's power solely to operate its papermill. The other two-thirds goes to the two-thirds owner of Moreau, Hydro-Co. Enterprises, Inc. (a subsidiary of the former owner, Niagara Mohawk Power Corporation). The primary reason for Finch, Pruyn's initial investment in Moreau was to gain some degree of control over the level of the Hudson River and the water flow for its papermaking operation.

In support of its application, Finch, Pruyn states that it had revenues of $164 million for the fiscal year ended January 3, 1988. For the fiscal year ended December 31, 1987, Moreau had revenues of $678,000, which amounted to 0.41% of Finch, Pruyn's revenues. The dividend income derived from Finch Pruyn's one-third stock ownership of Moreau amounted to 0.34% of the net income of Finch, Pruyn.

For the Commission, by the Division of Investment Management, pursuant to delegated authority.

Shirley F. Hollis,

Assistant Secretary.

[FR Doc. 88-7501 Filed 4-5-88; 8:45 am]

BILLING CODE 8010-01-M

[Release No. 35-24614]

Filings Under the Public Utility Holding Company Act of 1935 ("Act")

March 31, 1988.

Notice is hereby given that the following filing(s) has/have been made with the Commission pursuant to provisions of the Act and rules promulgated thereunder. All interested persons are referred to the application(s) and/or declaration(s) for complete statements of the proposed transaction(s) summarized below. The application(s) and/or declaration(s) and any amendment(s) thereto is/are available for public inspection through the Commission's Office of Public Reference.

Interested persons wishing to comment or request a hearing on the application(s) and/or declaration(s) should submit their views in writing by April 25, 1988 to the Secretary, Securities and Exchange Commission, Washington, DC 20549, and serve a copy on the relevant applicant(s) and/or declarant(s) at the address(es) specified below. Proof of service (by affidavit or, in case of an attorney at law, by certificate) should be filed with the request. Any request for hearing shall identify specifically the issues of fact or law that are disputed. A person who so

[11] 17 CFR 200.30-3(a)(12) (1987).

requests will be notified of any hearing, if ordered, and will receive a copy of any notice or order issued in the matter. After said date, the application(s) and/or declaration(s), as filed or as amended, may be granted and/or permitted to become effective.

The Southern Company (70-7513)

Notice of Issuance and Sale of Common Stock; Order Authorizing Proxy Solicitation

The Southern Company ("Southern") 64 Perimeter Center East, Atlanta, Georgia 30346, a registered holding company, has filed a declaration pursuant to sections 6(a), 7 and 12(e) of the Act and Rules 50(a)(5), 62 and 65 thereunder.

Southern proposes to grant Incentive Stock Options, Non-qualified Stock Options, Stock Appreciation Rights and Restricted Stock Awards ("Options & Rights"), from time to time through December 7, 1997. A total of 3,000,000 shares of commong stock, par value $5 per share, is available for grants by the Compensation Committee of the board of directors of Southern ("Committee") pursuant to The Southern Company Executive Stock Plan ("Plan"). The Plan permits the Committee to grant, in its discretion, the Options & Rights to certain employees of the Southern electric system recommended by the president of Southern and approved by the Committee.

Southern has filed its proxy solicitation material and requests that the effectiveness of its declaration with respect to the solicitation of proxies for voting by its shareholders on the proposal to approve the Southern Company Executive Plan, be permitted to become effective as provided in Rule 62. Southern proposes to mail the notice of meeting, proxy statement and proxy to its shareholders for the stockholders meeting on May 25, 1988.

It appears to the Commission that Southern's declaration regarding the proposed solicitation of proxies should be permitted to become effective forthwith, pursuant to Rule 62:

It Is Ordered, that the declaration regarding the proposed solicitation of proxies be, and it hereby is, permitted to become effective forthwith, pursuant to Rule 62 and subject to the terms and conditions prescribed in Rule 24 under the Act.

For the Commission, by the Division of Investment Management, pursuant to delegated authority.

Jonathan G. Katz,

Secretary.

[FR Doc. 88-7502 Filed 4-5-88; 8:45 am]

BILLING CODE 8010-01-M

DEPARTMENT OF TRANSPORTATION

Office of the Secretary

[Order 88-4-1]

Fitness Determination of Laredo Air, Inc.; Order to Show Cause

AGENCY: Department of Transportation.

ACTION: Notice of Commuter Air Carrier Fitness Determination—Order 88-4-1, Order to Show Cause.

SUMMARY: The Department of Transportation is proposing to find Laredo Air, Inc., fit, willing, and able to provide commuter air service under section 419(c)(2) of the Federal Aviation Act.

Responses: All interested persons wishing to respond to the Department of Transportation's tentative fitness determination should file their responses with the Air Carrier Fitness Division, P-56, Department of Transportation, 400 Seventh Street SW., Room 6420, Washington, DC 20590, and serve them on all persons listed in Attachment A to the order. Responses shall be filed no later than April 8, 1988.

FOR FURTHER INFORMATION CONTACT: Ms. Carol A. Woods, Air Carrier Fitness Division (P-56, Room 6420), U.S. Department of Transportation, 400 Seventh Street SW., Washington, DC 20590, (202) 366-2340.

Dated: April 1, 1988.

Matthew V. Scocozza,

Assistant Secretary for Policy and International Affairs.

[FR Doc. 88-7545 Filed 4-5-88; 8:45 am]

BILLING CODE 4910-62-M

[Order 88-4-2]

Fitness Determination of Tri Air Freight, Inc.; Order to Show Cause

AGENCY: Department of Transportation.

ACTION: Notice of Commuter Air Carrier Fitness Determination—Order 88-4-2, Order to Show Cause.

SUMMARY: The Department of Transportation is proposing to find that Tri Air Freight, Inc., is fit, willing, and able to provide commuter air service under section 419(c)(2) of the Federal Aviation Act.

RESPONSES: All interested persons wishing to respond to the Department of transportation's tentative fitness determination should file their responses with the Air Carrier Fitness Division, Room 6420, Department of Transportation, 400 7th Street SW., Washington, DC 20590, and serve them on all persons listed in Attachment A to the order. Responses shall be filed no later than April 8, 1988.

FOR FURTHER INFORMATION CONTACT: Barbara P. Dunnigan, Air Carrier Fitness Division, Department of Transportation, 400 7th Street SW., Washington, DC 20590, (202) 366-2342.

Dated: April 1, 1988.

Matthew V. Scocozza,

Assistant Secretary for Policy and International Affairs.

[FR Doc. 88-7546 Filed 4-5-88; 8:45 am]

BILLING CODE 4910-62-M

[Order 88-4-4; Docket 45242]

Application of Westates Airlines, Inc. for Redetermination of Its Fitness, Order to Show Cause

AGENCY: Department of Transportation.

ACTION: Notice of Order to Show Cause (Order 88-44) Docket 45242.

SUMMARY: The Department of Transportation is directing all interested persons to show casue why it should not isuse an order finding that Westates Airlines, Inc., is fit and reissue it a certificate of public convenience and necessity for interstate and overseas scheduled air transportation.

DATE: Persons wishing to file objections should do so no later than April 8, 1988.

ADDRESSES: Objections and answers to objections should be filed in Docket 45242 and addressed to the Documentary Services Division (C-55, Room 4107), U.S. Department of Transportation, 400 Seventh Street SW., Washington, DC 20590 and should be served upon all parties listed in Attachment A to the order.

FOR FURTHER INFORMATION CONTACT: Ms. Kathy A. Lusby, Air Carrier Fitness Division (P-56, Room 6420), U.S. Department of Transportation, 400 Seventh Street SW., Washington, DC 20590, (202) 366-2337.

Dated: April 1, 1988.

Matthew V. Scocozza,

Assistant Secretary

[FR Doc. 88-7547 Filed 4-5-88; 8:45 am]

BILLING CODE 4910-62-M

Federal Highway Administration

Environmental Impact Statement; Worcester/Millbury, MA

AGENCY: Federal Highway Administration (FHWA), DOT.

ACTION: Supplemental notice of intent.

SUMMARY: The FHWA is issuing this notice to advise the public of a project change for an environmental impact statement that is being prepared for a proposed highway project in Worcester and Millbury, Massachusetts.

FOR FURTHER INFORMATION CONTACT: Arthur R. Churchill, District Engineer, FHWA, Transportation System Center, 10th Floor, 55 Broadway, Cambridge, Massachusetts 02142; Frank Bracaglia, Deputy Chief Engineer, Project Development, Massachusetts Department of Public Works, 10 Park Plaza, Room 4261, Boston, Massachusetts 02116.

SUPPLEMENTARY INFORMATION: The proposed project change involves a new alternative to relocate a three mile section of Route 146 starting at a point approximately 300 feet north of Route 20 and proceeds northerly to Grammont Road on a westerly alignment closer to the Blackstone River. Also included are improvements to the interchange at I-290 and Route 146 at Brosnihan Square and the addition of a travel lane in each direction on Route 20 which would extend from Granite Street in Worcester, westerly to the off-ramp for the proposed new interchange at the Massachusetts Turnpike, a distance of approximately 0.5 mile.

A scoping meeting is scheduled to be held on April 20, 1988 at 10:00 AM at the Massachusetts Department of Public Works District #3 Office, 403 Belmont Street, Worcester, Massachusetts 01604.

(Catalog of Federal Domestic Assistance Program Number 20.205 Highway Planning and Construction. The regulations implementing Executive Order 12372 regarding intergovernmental consultation on Federal Programs and activities apply to this program.)

Issued on March 30, 1988.

Arthur R. Churchill,

District Engineer.

[FR Doc. 88-7494 Filed 4-5-88; 8:45 am]

BILLING CODE 4910-22-M

UNITED STATES INFORMATION AGENCY

Grants Program for Private Not-for-Profit Organizations in Support of International Educational and Cultural Activities

The United States Information Agency (USIA) announces a program of selective assistance and limited grant support to non-profit activities of United States institutions and organizations in the Private Sector. The program is designed to increase mutual understanding between the people of the U.S. and other countries and to strengthen the ties which unite our societies. The information collection involved in this solicitation is covered by OMB Clearance Number 3116-0175, entitled "A Grants Program for Private, Non-Profit Organizations in Support of International Educational and Cultural Activities," announced in the **Federal Register** June 3, 1987.

Private sector organizations interested in working cooperatively with USIA on the following concept are encouraged to so indicate:

Higher Education in the United States: A Program for Soviet Education Officials: The Office of Private Sector Programs will assist in supporting a two/three-week study tour for eight/twelve Soviet education officials. This program will focus on the higher education and post-secondary academic options available in the U.S. and the structure of the American higher education system. The program will include travel to Washington, DC and at least one state capital. Participants will include Soviet university rectors (equivalent to American university presidents), representatives of the State Committee for Public Education of the USSR, and officials from the central and republic governments.

USIA is mot interested in working with organizations that show promise for innovative and cost-effective programming; and with organizations that have potential for obtaining private-sector funding in addition to USIA support. Organizations must have the substantive expertise and logistical capability needed to successfully develop and conduct the above project and should also demonstrate a potential for designing programs which will have a lasting impact on their participants.

Interested organizations should submit a request for complete application materials—postmaked no later than twenty days from the date of this notice—to the address listed below. The Office of Private Sector Programs will then forward a set of materials which contains proposal guidelines.

Office of Private Sector Programs, Bureau of Educational and Cultural Affairs (ATTN: Initiative Programs), United States Information Agency, 301 4th Street, SW., Washington, DC 20547.

Dated: March 24, 1988.

Robert Francis Smith,

Director, Office of Private Sector Programs.

[FR Doc. 88-7495 Filed 4-5-88; 8:45 am]

BILLING CODE 8230-01-M

Sunshine Act Meetings

Federal Register
Vol. 53, No. 66
Wednesday, April 6, 1988

This section of the FEDERAL REGISTER contains notices of meetings published under the "Government in the Sunshine Act" (Pub. L. 94-409) 5 U.S.C. 552b(e)(3).

LEGAL SERVICES CORPORATION

Voucher Subcommittee to the Provision for the Delivery of Legal Services Committee Amendment to the Agenda

"FEDERAL REGISTER" CITATION OF PREVIOUS ANNOUNCEMENT: 53 FR 11000.

PREVIOUSLY ANNOUNCED TIME AND DATE OF MEETING: The meeting will commence at 9:00 a.m. on Friday, April 9, 1988, and continue until the close of business.

EXPLANATION OF CHANGE: The meeting is to be held on Saturday, not Friday as stated in the previous notice.

PLACE: The International Hotel, BWI, Scott Room, Elm Road, Baltimore, Maryland 21240.

STATUS OF MEETING: Open.

MATTERS TO BE CONSIDERED:

1. Approval of Agenda
2. Approval of Minutes
   —March 24, 1988
3. Report on the History of the LSC Voucher Program
4. Report on the Current Status of Voucher Studies

Discussion and Public Comment follow each item.

CONTACT PERSON FOR MORE INFORMATION: Maureen R. Bozell, Executive Office, (202) 863-1839.

Date issued: April 4, 1988.

Maureen R. Bozell,

Secretary.

[FR Doc. 88-7629 Filed 4-4-88; 12:56 pm]

BILLING CODE 7050-01-M

NATIONAL TRANSPORTATION SAFETY BOARD

TIME AND DATE: 9:30 a.m. Tuesday, April 12, 1988.

PLACE: Board Room (812A), Eighth Floor, 800 Independence Avenue, SW., Washington, DC 20594.

STATUS: Open.

MATTERS TO BE CONSIDERED:

1. Aircraft Accident Report: Air New Orleans, Inc., British Aerospace 3101, New Orleans International Airport, Kenner, Louisiana, May 26, 1987.
2. Public Hearing: Recommendation for No Hearing re Aircraft Accident Involving a Fairchild Metroliner, Cary, North Carolina, February 19, 1988.

FOR MORE INFORMATION CONTACT: Bea Hardesty (202) 382-6525.

Bea Hardesty,

Federal Register Liaison Officer.

April 1, 1988.

[FR Doc. 88-7580 Filed 4-4-88; 9:56 am]

BILLING CODE 7533-01-M

UNIFORMED SERVICES UNIVERSITY OF THE HEALTH SCIENCES

TIME AND DATE: 7:00 p.m., April 8, 1988.

PLACE: Room 3263, Xerox Training Center, Leesburg, Virginia.

STATUS: Open—under "Government in the Sunshine Act" (5 U.S.C. 552b(e)(3)).

MATTERS TO BE CONSIDERED:

7:00 p.m.—Meeting, Board of Regents

(1) Report—Executive Secretary;
(2) Report—President, USUHS: Tri-Service Training;
(3) Comments—Members, Board of Regents;
(4) Comments—Acting Chairman, Board of Regents

New Business

SCHEDULE MEETINGS: April 11, 1988.

CONTACT PERSON FOR MORE INFORMATION: Donald L. Hagengruber, Executive Secretary of the Board of Regents, 202/295-3028.

L.M. Bynum,

Alternate OSD Federal Register Liaison Officer Department of Defense.

April 1, 1988.

[FR Doc. 88-7630 Filed 4-4-88; 2:06 pm]

BILLING CODE 3810-01-M

UNIFORMED SERVICES UNIVERSITY OF THE HEALTH SCIENCES

TIME AND DATE: 8:00 a.m., April 11, 1988.

PLACE: Uniformed Services University of the Health Sciences, Room D3-001, 4301 Jones Bridge Road, Bethesda, Maryland 20814-4799.

STATUS: Open—Under "Government in the Sunshine Act" (5 U.S.C. 552B(e)(3)).

MATTERS TO BE CONSIDERED:

8:00 a.m.—Meeting, Board of Regents

(1) Approval of Minutes—April 8, 1988;
(2) Faculty Matters;
(3) Report—Admissions;
(4) Report—Associate Dean for Operations;
(5) Report—President, USUHS;
(6) Comments—Members, Board of Regents;
(7) Comments—Chairman, Board of Regents

New Business

SCHEDULED MEETINGS: July 11, 1988.

CONTACT PERSON FOR MORE INFORMATION: Donald L. Hagengruber, Executive Secretary of the Board of Regents, 202/295-3028.

L.M. Bynum,

Alternate OSD Federal Register Liaison Officer, Department of Defense.

April 1, 1988.

[FR Doc. 88-7631 Filed 4-4-88; 2:06 pm]

BILLING CODE 3810-01-M

Corrections

Federal Register
Vol. 53, No. 66
Wednesday, April 6, 1988

This section of the FEDERAL REGISTER contains editorial corrections of previously published Presidential, Rule, Proposed Rule, and Notice documents and volumes of the Code of Federal Regulations. These corrections are prepared by the Office of the Federal Register. Agency prepared corrections are issued as signed documents and appear in the appropriate document categories elsewhere in the issue.

DEPARTMENT OF HEALTH AND HUMAN SERVICES

Food and Drug Administration

[Docket No. 88M-0020]

Weck Surgical Systems; Premarket Approval of Weck Model BL-12 Nd: YAG Ophthalmic Laser

Correction

In notice document 88-3858 beginning on page 5468 in the issue of Wednesday, February 24, 1988, make the following corrections:

On page 5469, in the first column, under **SUPPLEMENTARY INFORMATION**, in the 1st and 2nd lines, "May 21, 1987" should read "May 13, 1987". In the 9th line, "ophthalmic" was misspelled. In the 11th line, after "of" insert "the" and in the 14th line, "pseudophakic" was misspelled.

BILLING CODE 1505-01-D

DEPARTMENT OF LABOR

Mine Safety and Health Administration

30 CFR Part 75

Safety Standards for Roof, Face and Rib Support

Correction

In rule document 88-1560 beginning on page 2354 in the issue of Wednesday, January 27, 1988, make the following corrections:

§ 75.220 [Corrected]

1. On page 2378, in the third column, in § 75.220, the paragraph designation "(b)(i)" should read "(b)(1)".

§ 75.223 [Corrected]

2. On page 2380, in the second column, in § 75.223(c), in the first line, "of" should read "on".

BILLING CODE 1505-01-D

DEPARTMENT OF TRANSPORTATION

Coast Guard

33 CFR Part 110

[CGD1-87-087]

Special Anchorage Area; Keansburg, NJ

Correction

In proposed rule document 88-3189 beginning on page 4422 in the issue of Tuesday, February 16, 1988, make the following correction:

On page 4422, in the third column, in the third paragraph, in the 17th line, "74°27'14"" should read "40°27'14"".

BILLING CODE 1505-01-D

federal register

Wednesday
April 6, 1988

Part II

Department of Energy
Nuclear Regulatory Commission

Nuclear Waste Policy Act of 1982; Spent Fuel Storage and Disposal; Compliance with Section 223; Notice Update

DEPARTMENT OF ENERGY

NUCLEAR REGULATORY COMMISSION

Nuclear Waste Policy Act of 1982; Spent Fuel Storage and Disposal; Compliance with Section 223

AGENCIES: Department of Energy and Nuclear Regulatory Commission.

ACTION: Update of the previously published notice of offer to cooperate with and provide technical assistance to non-nuclear weapon states in the field of spent nuclear fuel storage and disposal.

SUMMARY: The Department of Energy and the Nuclear Regulatory Commission, in accordance with section 223 of the Nuclear Waste Policy Act of 1982 (Pub. L. 97–425), January 7, 1983 (the Act), published in the **Federal Register** on March 30, 1983 (48 FR 13253, corrected on April 20, 1983 by notice 48 FR 16960) and updated and reissued in the **Federal Register** on April 6, 1984 (49 FR 13858), April 5, 1985 (50 FR 13738), April 3, 1986 (51 FR 11463), and April 3, 1987 (52 FR 10792) an offer to cooperate with and provide technical assistance to non-nuclear weapon states in the field of spent nuclear fuel storage and disposal. This notice is the fifth and final update and again tenders this offer as provided by the Act. Available resources, scope, criteria, and modes of cooperation are described in this offer.

Background

Section 223 of the Act provides that "it shall be the policy of the United States to cooperate with and provide technical assistance to non-nuclear weapon states in the field of spent fuel storage and disposal."

Section 223(b)(1) of the Act required that within 90 days of enactment of the Act the Department of Energy and the Nuclear Regulatory Commission would:

> Publish a joint notice in the **Federal Register** stating that the United States is prepared to cooperate with and provide technical assistance to non-nuclear weapon states in the fields of at-reactor spent fuel storage; away-from-reactor spent fuel storage; monitored retrievable spent fuel storage; geologic disposal of spent fuel; and the health, safety, and environmental regulation of such activities. The notice shall summarize the resources that can be made available for international cooperation and assistance in these fields through existing programs of the Department and the Commission, including the availability of: (i) Data from past or ongoing research and development projects; (ii) consultations with expert Department or Commission personnel or contractors; and (iii) liaison with private business entities and organizations working in these fields.

It is the intention of the Department of Energy and the Nuclear Regulatory Commission to offer to provide cooperation and technical assistance to other nations to improve spent fuel storage conditions as deemed necessary. It is not the intention of this offer to include transfer to the United States of spent fuel from foreign nuclear power reactors.

Section 223(c) of the Act specifies:

> Following publication of the annual joint notice referred to in paragraph (2), the Secretary of State shall inform the governments of non-nuclear weapon states and, as feasible, the organizations operating nuclear power plants in such states that the United States is prepared to cooperate with and provide technical assistance to non-nuclear weapon states in the fields of spent fuel storage and disposal, as set forth in the joint notice. The Secretary of State shall also solicit expressions of interest from non-nuclear weapon state governments and non-nuclear weapons state nuclear power reactor operators concerning their participation in expanded United States cooperation and technical assistance programs in these fields. The Secretary of State shall transmit any such expressions of interest to the Department and the Commission.

Response to the Offers

This notice was first published in the **Federal Register** on March 30, 1983 and was updated and reissued in the **Federal Register** on April 6, 1984, April 5, 1985, April 3, 1986, and April 3, 1987. (To date, fifteen countries have responded to this offer.)

Discussion and Description of Proposed Cooperative Activities and Programs

For several years the United States has been cooperating with other nations as well as international organizations in areas related to spent fuel handling, storage, and geologic disposal. The Department of Energy and the Nuclear Regulatory Commission have adhered to policies of sharing the results of their studies and programs in these areas with other nations and they have sought to establish a framework to permit U.S. private organizations working in these fields to cooperate with their counterparts in the other nations. To the extent feasible, it is the intention of the Department of Energy and the Nuclear Regulatory Commission to augment their international cooperative ties in these areas. Any arrangements relative to funding of joint research and development projects will be developed on a case by case basis subject to program demands and the authorization and appropriation of funds by Congress.

In the course of developing the proposed new arrangements with other governments of foreign institutions, both the Department of Energy and the Nuclear Regulatory Commission will be guided by a number of factors and criteria, including the following:

—Whether the proposed program of arrangements will be useful in assisting a non-nuclear weapon state in overcoming significant and timely spent fuel storage or handling problems;

—Whether the arrangements will serve to advance knowledge in the field;

—Whether the arrangements will help solve common spent fuel handling problems; and

—Whether the arrangements will contribute to more predictability in fuel cycle operations.

While it is anticipated that in the near future most nations will be able to solve their spent fuel storage problems on a national basis, this is an area that could benefit from enhanced international cooperation. As noted by the Final Report of the International Atomic Energy Agency's Expert Group on International Spent Fuel Management (IAEA–ISFM/EG/26, Rev. 1, page 4, July 1982), prior to 1990 there is reasonably good assurance that adequate provision for dealing with spent fuel will exist. During the 1990's, however, the Report states that greater reliance must be placed on spent fuel management options which are now mainly in the planning stage, and further states that "By the year 2000 additional capacity remains to be identified and eventually provided. As greater reliance is placed upon planned facilities, some international cooperation could provide greater assurances that adequate means to deal with the spent fuel arisings would be provided."

Some new storage technologies now under development hold promise for achieving further economies in storage arrangements. Also, there are incentives for developing common standards and guidelines between nations relating to the conditions for shipping spent fuel. Nations can benefit from comparing information on the applicable regulatory practices and, in some cases, it may be productive for nations sharing common spent fuel storage problems to explore new institutional mechanisms designed to facilitate joint action.

The following paragraphs in this notice briefly summarize the nature of the activities of the Department of Energy and the Nuclear Regulatory Commission in these areas, as well as the cooperative activities that these

agencies would propose to explore or engage in, as circumstances warrant.

The U.S. Department of Energy

The Department of Energy is now working with U.S. industry and utilities to assure that sufficient spent fuel storage capacity will be available for meeting domestic needs. U.S. utilities operating power reactors are presently storing spent fuel in water-filled pools at their reactor sites. In the next few years, additional capacity will be needed at some sites and the gravity of this problem could increase rapidly unless additional storage capacities are made available on a timely basis. Accordingly, the Department of Energy, industry, and utilities are now actively developing alternative methods for consolidating, transporting, and storing spent light water reactor fuel in order to increase at-reactor storage capacity.

The emphasis of this domestic program is to work jointly with industry for developing and licensing alternative storage technologies. Within this context, the Department of Energy is now in the process of working with industry and utilities in developing and demonstrating spent fuel rod consolidation and dry storage equipment and technology in support of utility license applications and is participating in efforts to assure the licensability of the entire system for handling, packaging, transportation, and storage. In addition, monitored retrievable storage facilities are being evaluated as integral components of the nuclear waste management system.

With these considerations in mind and considering the criteria cited above, the Department of Energy is prepared to engage in the following kinds of cooperative activities with non-nuclear weapon states and international organizations:

—To provide information, in the form of exchanges of documents and reports, on Department of Energy funded research and development projects in the specific areas of spent fuel handling and storage; pool storage; spent fuel packaging for storage or disposal; dry storage in metal casks, drywells, vaults and concrete silos; and on the technology of away-from-reactor and monitoried retrievable storage;

—To arrange, on an appropriate basis, visits and briefings between foreign representatives and Department of Energy and contractor personnel in those areas and to facilitate, within the terms of applicable U.S. laws, regulations and policies, contacts with private U.S. business entities and organizations with specialized capabilities in these fields;

—To arrange consultations between foreign representatives and expert Department of Energy and contractor personnel to review and comment on, as appropriate, other nations' proposed development program plans and facility designs;

—To furnish, under mutually agreed terms, information on certain U.S. standards and verified computer codes that may be used for equipment, component and facility design; and

—To cooperate, as appropriate, with international organizations to disseminate information to non-nuclear weapon states.

As U.S. program demands and the authorization and appropriation of funds by Congress permit, the Department of Energy also is prepared to participate in jointly funded development and demonstration activities such as:

—The demonstration of concepts for disassembling spent fuel assemblies and for consolidating fuel rods in operating reactor pools;

—The development and demonstration of technology for packaging spent fuel for storage and disposal;

—Activities related to assessing the feasibility of away-from-reactor storage, including foreign participation in, or observation of, U.S. tests and demonstrations of equipment and technology for dry storage of spent fuels; and

—The conduct of joint studies to evaluate monitored retrievable spent fuel storage.

In addition to the management of spent fuel in retrievable modes, the Department of Energy also is conducting extensive research and development on the geologic disposal of nuclear waste, including the spent fuel option. Where there is mutual interest, information in these areas can be exchanged through:

—The transmittal of published information;

—Arrangement of visits and consultations with the Department of Energy and contractor experts on spent fuel disposal methodology;

—Program planning; and

—Systems analyses.

The research and development activities conducted under the Department of Energy geologic disposal program include:

—The detailed characterization of spent fuel as required for disposal;

—Research and systems studies on spent fuel disposal packages and containers, and their materials;

—Safety analyses; and

—Disposal repository designs, including their performance evaluations in various host rock media.

Under the cooperative activities that have been described above, the information to be provided could possibly include exchanges of documents and reports, visits with U.S. specialists, short- or long-term assignments, the undertaking of joint seminars and meetings.

The Nuclear Regulatory Commission

In regard to the issue at hand, the Nuclear Regulatory Commission is responsible for safety and environmental reviews, licensing, inspection and enforcement, and the conduct of research on the safety and environmental regulation of reactor waste in the United States, including the handling, storage, treatment, and disposal of spent reactor fuel. These responsibilities include licensing dry and wet at-reactor and away-from-reactor storage, monitored retrievable storage, and spent fuel and waste disposal (including geological disposal) at permanent repositories.

The Nuclear Regulatory Commission is prepared to cooperate with, and provide technical assistance to, non-nuclear weapon states in the areas of the health, safety, and environmental regulation of spent fuel management and disposal activities. Cooperation could include the following:

—Making available data from past and ongoing research and regulatory efforts: These data consist of evaluated and documented experimental results, validated and fully documented computer codes, and research results for which documentation and evaluation are complete. These data are primarily documented as written reports, which the Nuclear Regulatory Commission can provide in specific technical subject areas, as agreed. State-of-the-art information on ongoing safety research programs can be acquired through attendance by representatives from participating countries at the annual Water Reactor Safety Research Information Meeting and other occasional topical meetings. Additional data more directly related to regulatory activities, such as regulations, standards, and guides, can also be provided as appropriate in specific subject areas as requested;

—Consulting with expert Nuclear Regulatory Commission personnel and Nuclear Regulatory Commission contractor staff. As arranged by

specific agreement with the Nuclear Regulatory Commission, expert technical consultation can be provided by Nuclear Regulatory Commission personnel and, as needed, by contractor employees in the regulatory areas within the Commission's purview;

—Helping (to the extent permitted by U.S. laws, regulations, and policies) foreign governments to establish initial contacts with private U.S. entities that conduct business in the applicable waste management activities;

—Cooperating, as appropriate, with international organizations to disseminate information to non-nuclear weapon states; and

—Participating in joint research programs. The Nuclear Regulatory Commission is ready to negotiate and engage in jointly funded research programs, consistent with the Agency's mission, with appropriate foreign entities, subject to the authorization and appropriation of funds by the Congress.

Relationships With Multinational Organizations and International Scientific Bodies

In addition to the foregoing activities, and within the framework of such foreign policy guidance as may be provided by the U.S. Department of State, it is expected that the Nuclear Regulatory Commission and Department of Energy will continue to participate in activities related to spent fuel handling and disposal that are undertaken by international organizations, if appropriate. These organizations have sponsored a range of activities relevant to this subject, and it is recognized that some non-nuclear weapon states may wish to avail themselves of the services of these bodies as well as the cooperative programs that are available bilaterally. The Nuclear Energy Agency of the Organization for Economic Cooperation and Development, for example, has been actively involved in studies related to the disposal of nuclear wastes. Also, as mentioned above, through the efforts of an Expert Group on International Spent Fuel Management, the International Atomic Energy Agency in 1982 completed a study on the potential for international cooperation in the management of spent fuel, giving emphasis to technical, economic, institutional, and legal considerations. Several of the recommendations of the International Atomic Energy Agency Expert Group could serve as a stimulus for further cooperative initiatives. Areas that may merit further study include the establishment of nuclear safety standards recommended by the International Atomic Energy Agency for spent fuel storage and transport, and possible further studies, as the interests of the international community dictate, such as multinational or regional approaches to spent fuel management and disposal. Storage and Disposition of Research Reactor Spent Fuels.

The cooperative programs described in this announcement are addressed to the problems associated with the storage and handling of power reactor spent fuel that originates primarily in light water reactors. As such, they do not address any issues associated with the accumulation of foreign research reactor fuels.

Solicitation of Expressions of Interest from Nonnuclear Weapon States

As the next step in developing this offer of cooperation and technical assistance, non-nuclear weapon states will again be contacted through diplomatic channels to acquaint them with this proposal and to solicit expressions of interest. The Department of State will transmit any such expression of interest to the Department of Energy and the Nuclear Regultory Commission.

Requests for Information

Inquiries about this notice may be sent to the following:

Charles E. Kay, Acting Director, Office of Civilian Radioactive Waste Management, U.S. Department of Energy, Washington, DC 20585 (Tel. No. 202/586-6842)

James R. Shea, Director, Office of International Programs, U.S. Nuclear Regulatory Commission, Washington, DC 20555 (Tel. No. 301/492-0347)

Approval.

Charles E. Kay,

Acting Director, Office of Civilian Radioactive Waste Management, Department of Energy.

Dated: March 30, 1988.

Approval.

Victor Stello,

Executive Director for Operations, Nuclear Regulatory Commission.

Dated: March 17, 1988.

[FR Doc. 88-7409 Filed 4-5-88; 8:45 am]

BILLING CODE 6450-01-M

federal register

Wednesday
April 6, 1988

Part III

Department of Health and Human Services

Food and Drug Administration

21 CFR Parts 175, 176, 177, and 178
Colorants for Polymers; Tentative Final Rule

DEPARTMENT OF HEALTH AND HUMAN SERVICES

Food and Drug Administration

21 CFR Parts 175, 176, 177, and 178

[Docket No. 80N-0428]

Colorants for Polymers

AGENCY: Food and Drug Administration.

ACTION: Tentative final rule.

SUMMARY: The Food and Drug Administration (FDA) is announcing its tentative decision to revise the food additive regulations to provide for the safe use of substances used as colorants for polymers. The agency initiated this rulemaking with a proposal that it published in the **Federal Register** on June 6, 1972 (37 FR 11255). This proposal described five food additive petitions that the agency had received requesting approval of a number of colorants for use in polymers. The agency is responding to comments on the 1972 proposal and on two final rules that FDA published in the **Federal Register** on October 14, 1983 (48 FR 46773 and 48 FR 46774), that also addressed issues concerning colorants for polymers. In addition, FDA is announcing its tentative decision to transfer the listings of all regulated colorants that are used in food-contact polymers to § 178.3297 *Colorants for polymers* (21 CFR 178.3297). These listings are scattered throughout Parts 175, 176, 177, and 178 (21 CFR 175, 176, 177, and 178).

DATE: Comments by June 6, 1988.

ADDRESS: Written comments to the Dockets Management Branch (HFA-305), Food and Drug Administration, Rm. 4-62, 5600 Fishers Lane, Rockville, MD 20857.

FOR FURTHER INFORMATION CONTACT: Mary W. Lipien, Center for Food Safety and Applied Nutrition (HFF-335), Food and Drug Administration, 200 C Street SW., Washington, DC 20204, 202-472-5690.

SUPPLEMENTARY INFORMATION:

I. History of Rulemaking

The Food Additives Amendment of 1958 (Pub. L. 85-929, 72 Stat. 1784-1789), which was enacted into law on September 6, 1958, required that the safety of all food additives be established before marketing, and that FDA issue regulations specifying safe conditions of use of food additives. It also contained an interim provision for the continued use of those food ingredients that were in commercial use at the time the Food Additives Amendment was passed. This interim provision provided time for manufacturers to determine whether a particular ingredient was a food additive and, if it was, to develop information demonstrating that the use of that substance was safe. This information and other relevant data supporting the request for use of an additive were to be submitted to FDA in a food additive petition.

FDA listed in § 121.91 (deleted 31 FR 8008; June 7, 1966) of Title 21 of the Code of Federal Regulations those substances whose continued use it permitted under the interim provision. Included among the substances listed under § 121.91 *Further extensions of effective date of statute for certain specified food additives as indirect food additives*, the so-called "FAX list," were 14 colorants for use in food packaging materials: Pigment blue 15 (phthalocyanine blue), Color Index No. 74160; pigment green 7 (phthalocyanine green), Color Index No. 74260; pigment green 17 (chromium oxide green), Color Index No. 77288; pigment white 21 (barium sulfate), Color Index No. 77120; quinacridone red; pigment orange 13 (benzidine orange), Color Index No. 21110; pigment orange 23 (cadmium mercury sulfide), Color Index No. 77201; pigment red 48 (red 2B, rubine red), Color Index No. 15865; pigment red 108 (cadmium selenide), Color Index No. 77196; pigment red 113 (cadmium mercury sulfide), Color Index No. 77201; pigment yellow 12 (benzidine yellow), Color Index No. 21090; pigment yellow 14 (benzidine yellow OT), Color Index No. 21095; pigment yellow 17 (benzidine yellow), Color Index No. 21105; and pigment yellow 35 (cadmium zinc sulfide), Color Index No. 77117. The first five colorants listed were the subjects of one or more food additive petitions submitted to FDA.

When the authority for § 121.91 expired on December 31, 1965, the regulatory status of the colorants listed in this regulation was uncertain. In response to numerous inquiries, in early 1966, FDA began to issue opinion letters concerning different colorants. Generally, these opinions allowed the continued use of the colorants that had been on the FAX list and of those colorants that were the subject of food additive petitions submitted after enactment of the Food Additives Amendment.

Five petitions were filed between 1967 and 1971 and were the basis for the proposal "Colorants for Plastics" which was published in the **Federal Register** of June 6, 1972 (37 FR 11255) (corrected 37 FR 18562; September 13, 1972). The petitioners, the colorants that were the subjects of their petitions, and the dates and **Federal Register** citations for the publication of the notices of filing of these petitions are:

1. Dr. Carl Nau, Institute of Environmental Health, University of Oklahoma, Norman, OK 73104 (FAP 6R1862), for carbon black in polyethylene and ethylene alkene-1 copolymers; filed September 30, 1967 (32 FR 13734).

2. American Cyanamid Co., Wayne, NJ 07470 (FAP 8R2288), for all the pigments and colorants listed for use in § 175.300 *Resinous and polymeric coatings* (21 CFR 175.300), for use in ureaformaldehyde resins; filed June 18, 1968 (33 FR 8856).

3. Morton International, Inc., 110 North Wacker Dr., Chicago, IL 60606 (FAP OR2512), for phthalocyanine blue (pigment blue 15), phthalocyanine green (pigment green 7), titanium dioxide-barium sulfate, and carbon black (channel process), as colorants in polyethylene containers for dry food; filed May 7, 1970 (35 FR 7195).

4. Pennwalt Corp., 900 First Avenue, King of Prussia, PA 19476 (FAP OR2534), for iron oxide, carbon black (channel process), and phthalocyanine blue (pigment blue 15), as colorants in polyvinylidene fluoride resins; filed June 2, 1970 (35 FR 8506).

5. Eastman Chemical Products, Inc., Kingsport, TN 37660 (FAP IR2641), for phthalocyanine blue (pigment blue 15), phthalocyanine green (pigment green 7), chromium oxide green (pigment green 17), barium sulfate (pigment white 21), and quinacridone red (pigment violet 19) for use in polyolefin food-contact articles; filed March 17, 1971 (36 FR 5150).

After publication of the 1972 proposal, FDA received a number of comments and numerous requests for opinions on the use of the colorants listed in the proposal. In early 1973, the agency began issuing opinion letters that stated that only the colorants listed in the proposal could be used in food-contact polymers. These opinions letters differed from the agency's earlier opinions on colorants in that FDA no longer sanctioned the use of benzidine pigments, cadmium pigments, or pigment red 48 (see also comment 4).

Because of the numerous informal authorizations that resulted from the issuance of the post-1972 opinion letters, as well as the low public health concern about these substances, FDA did not take any action on the colorants proposal until 1983. FDA had, however, announced the filing, in 1980 and 1982, of two food additive petitions by the Ciba-Geigy Corp. for the use of an optical brightener in food-contact plastics. Food Additive Petition No.

6R3185 requested the use of 2,2'-(2,5-thiophenediyl)-bis(5-*tert*-butylbenzoxazole), commercially referred to as "Uvitex OB," in various polymers. The notice of filing for this petition was published on May 16, 1980 (45 FR 32433). Food Additive Petition No. 1B3550 requested the use of "Uvitex OB" in polypropylene only. The notice of filing for this petition was published on January 12, 1982 (47 FR 1332).

FDA completed its evaluation of these two petitions at approximately the same time and concluded that promulgation of one regulation approving both petitions would be appropriate. However, final action on both FAP No. 6R3185 and FAP No. 1B3550 was dependent on the establishment of a section in the food additive regulations where the colorant could be listed.

The agency therefore concluded that it would issue a final rule based upon those parts of the 1972 proposal relating to the establishment of a section in the Code of Federal Regulations for the listing of colorants and to the definition of "colorants." Thus, in the **Federal Register** of October 14, 1983, FDA published two final rules on colorants. One of these final rules (48 FR 46773) established 21 CFR 178.3297 *Colorants for polymers*, providing a place in the Code of Federal Regulations for the listing of colorants. In addition, to clarify terminology that would apply to these substances, FDA included a detailed definition of the term "colorants" in this regulation. The second final rule (48 FR 46774) listed the Ciba-Geigy Corp. optical brightener for use as a colorant in food-contact polymers under 21 CFR 178.3297.

Although the regulation establishing 21 CFR 178.3297 *Colorants for polymers* was a final rule, FDA solicited comments on it because of the amount of time that had passed since the 1972 proposal, and because the final rule did not address all of the issues that were raised in the 1972 proposal. The agency permitted 30 days for comment.

In the **Federal Register** of June 22, 1984 (49 FR 25630), the agency reopened the comment period for an additional 30 days, and in the **Federal Register** of August 1, 1984 (49 FR 30689), the agency extended the comment period to August 10, 1984.

II. Comments on the 1972 Proposal

In response to the 1972 proposal, FDA received eight letters containing various comments. A summary of the comments and the agency's responses follow:

1. One comment contended that it is reasonable to expect that most of the colorants proposed for use in food-contact polymeric substances will not migrate from the food-contact article to food, and that these colorants, therefore, should not be regarded as food additives as defined by section 201(s) of the Federal Food, Drug, and Cosmetic Act (the act) (21 U.S.C. 321(s)). The comment also contended that the final rule should not list such colorants, but that the rule should state that colorants that do not migrate to food may be used in food-contact articles without approval by FDA.

FDA disagrees with this comment. Section 201(s) of the act defines a food additive as "any substance the intended use of which results or may reasonably be expected to result, directly or indirectly, in its becoming a component or otherwide affecting the characteristics of any food (including any substance intended for use in producing, manufacturing, packing, processing, preparing, treating, packaging, transporting, or holding food; and including any source of radiation intended for any such use) * * *."

In *Monsanto Co.* v. *Kennedy*, 613 F. 2d 947, 955 (1979), the court pointed out that under this definition, the intended use of the substance must be reasonably expected to result in its becoming a component of food. For this element to be satisfied, the agency must determine with a fair degree of confidence that the substance, if an indirect food additive, migrates into food in more than insignificant amounts. The court said that it is not necessary that the level of migration be significant with reference to the threshold of direct detectability, so long as the substance's presence in food can be predicted on the basis of a meaningful projection from reliable data.

FDA finds that colorants used in food-contact polymers do become components of food. Existing theory and data produced by industry demonstrate that, under normal conditions of use, colorants will migrate to food from all polymers.

The migration of colorants from polymers is described by Fick's First and Second Laws of Diffusion, first enunciated in 1855 (Crank, J., "The Mathematics of Diffusion," 2d Ed., pp. 2 through 4, Oxford Press, London, 1976). The differential equations expressing these laws contain a variable called "diffusivity." The form of the differential equations derived from Fick's laws depends on such conditions as the initial colorant concentration, the time and temperature of exposure to food, the thickness of the polymer, and other properties of the polymer such as its permeability.

When applied to a particular situation to predict the migration of a colorant from a polymer, the diffusion equations derived from Fick's Second Law always predict a finite migration of the colorant to food based on initial colorant concentration in the polymer, provided that the diffusivity is not zero. Only if diffusivity is zero would no migration be likely.

Based on its review of published experimental results and of theoretical calculations based on numerous systems, FDA believes that the diffusivity of colorants in polymers will always be greater than zero, and that migration will occur whenever a colorant is present in the polymer. These published experimental results and theoretical calculations are supported by actual extraction studies with food-simulating solvents that have either been included in petitions by industry to support the use of colorants in polymers (see FAP 1R2641, above, for example) or submitted to the agency in letters that have requested opinions from FDA. These studies, demonstrating that colorants migrate to foods from polymers at low levels, have been very important to the agency in determining the safe conditions of use of the colorants.

The agency notes that this comment included no data to support its contention that there is no migration of colorants used in polymers. Therefore, based on the evidence before it, FDA concludes that colorants will become components of food, and that the extent that they will do so depends, at least in part, on the amount of colorant in the polymers. Given these facts, FDA has tentatively decided that colorants are food additives under the act (21 U.S.C. 348), and that it would not be correct to delete any colorants from the list of substances in proposed § 178.3297(e) on the ground that they do not migrate from polymeric food-contact surfaces.

2. One comment stated that there should be an opportunity for oral objection before final action on the proposal is taken.

This tentative final rule provides a 60-day comment period on the agency's tentative determinations. Thus, FDA is providing interested persons with an appropriate opportunity to comment or to submit new data. There is no requirement to provide an opportunity for oral objection before issuance of a final rule on this matter. However, any final rule that is issued in this proceeding may be the subject of objections and requests for hearing under the formal rulemaking provisions of the act (21 U.S.C. 348, 371).

3. One comment requested that the agency permit the use of oil as well as

stripped natural gas in the manufacture of carbon black. The comment claimed that some oil is used as a raw material by all carbon black manufacturers. The comment also stated that in the near future, the manufacture of carbon black from natural gas will cease.

Only carbon black that is produced by the channel process was listed in the 1972 proposal. In addition, in the **Federal Register** on August 8, 1961 (26 FR 7088), FDA listed this carbon black in §175.300 *Resinous and polymeric coatings* (21 CFR 175.300) as a colorant.

In the channel process, which is approved by the agency, natural gas is burned with the flame depositing carbon black on a cool iron surface such as channel iron. When oil or fuels other than natural gas are burned to produce a black coloring substance, the method is referred to as the "furnace" process. Furnace black colorant has not been approved by the agency. FDA has been concerned that this colorant contains relatively high levels of carcinogenic polycyclic aromatic hydrocarbons. The agency has not received any new information since 1972 that would eliminate that concern.

In response to this comment, the agency believes that a food additive petition with adequate analytical data would be required for the approval of a furnace black colorant.

4. One comment contended that benzidine yellows should be permitted as colorants in food-contact materials. The comment stated that FDA has permitted the use of benzidine yellows as colorants for food packaging, and that the U.S. Department of Agriculture (USDA) approved the use of benzidine yellows in meat wrappings.

Benzidine yellows (pigment yellow 12, Color Index No. 21090; Pigment yellow 14, Color Index No. 21095; and pigment yellow 17, Color Index No. 21105) were included on the FAX list (21 CFR 121.91) for use as colorants in food packaging materials (see History of Rulemaking in Section I). Between 1965, when authority for the FAX list expired, and 1972, when the colorants proposal was published, FDA issued numerous opinion letters allowing the continued use of these benzidine pigments and the other colorants on the FAX list for food-contact materials. However, because no acceptable food additive petitions were submitted requesting the use of these FAX list benzidine yellows, there was no basis for FDA to include these colorants in the 1972 proposal. FDA stopped issuing opinion letters allowing their use after the 1972 proposal was published, and no petitions have been received since that time for these colorants.

If there are persons interested in using these benzidine yellows, or other colorants for which FDA has not received a food additive petition, to color polymeric food-contact materials, they should submit an appropriate food additive petition to FDA.

Although USDA has approved benzidine yellows in meat wrappings in the past, current agreements between FDA and USDA (49 FR 2230) require that colorants used in meat and poultry wrappings have FDA clearance. Those persons who are using colorants that FDA has not approved for use in food contact polymers should contact Charles Edwards, Chief, Product Safety Branch, Food Ingredient Assessment Division, Science, Food Safety and Inspection Service, U.S. Department of Agriculture, Beltsville, MD 20705, for further information.

5. One comment requested that burnt Italian sienna, as well as raw sienna, be listed as colorants.

FDA concludes that it is appropriate to list both colorants in this tentative final rule. Raw sienna, which was included in the list of colorants in the June 6, 1972, proposal, is a yellowish clay colored by oxides of iron and manganese. It is found within the United States in Alabama, California, and Pennsylvania and in Cyprus and Italy. Burnt sienna is an orange-brown pigment made by calcining raw sienna. A review of the data on the calcining process submitted to FDA demonstrates that there is little difference between the two types of sienna. FDA, therefore, has revised the list of colorants to include both of these substances.

6. Several comments objected to the proposed maximum extraction limits for chromium oxide green (0.1 part per million (ppm)), phthalocyanine green (0.03 ppm), and quinacridone red (0.006 ppm). The comments claimed that the extraction limits are not necessary to assure the safe use of these colorants in food-contact polymeric substances.

The agency agrees with these comments. Generally, the agency does not place extraction limits on the use of indirect food additives unless such limits are necessary to assure the safety of the use of the substance. In this case, however, review of the data on these three colorants, particularly the data in Eastman Chemical Co.'s food additive petition, FAP 1R2641, reveals that the maximum limits of extraction included in the 1972 proposal were based upon estimates of migration into food and the results of preliminary extraction studies. These estimates and extraction studies provided useful information on the potential migration of the colorants into food; however, the extraction limits specified in the 1972 proposal are not necessary to assure the safe use of the colorants. Therefore, in this tentative final rule, FDA is removing the extraction limits that were in the 1972 proposal for these colorants.

7. Several comments requested that FDA approve for general use in all polymers those colorants that the agency proposed to limit to use in specific polymers. The colorants covered by this request are chromium oxide green, cobalt oxide-aluminum oxide (now cobalt aluminate (see Section IV of the preamble)), phthalocyanine green, quinacridone red, zinc carbonate, and zinc oxide.

FDA notes that, in the 1972 proposal, it proposed to restrict zinc carbonate, zinc oxide, and cobalt oxide-aluminum oxide to use in five different polymers, and that it proposed to restrict the remaining three colorants to use in olefin polymers. The agency has reviewed the available data in deciding whether to grant the comment's request.

In its review, FDA noted that migration data reported in Eastman Chemical Co.'s FAP 1R2641 for phthalocyanine green, chromium oxide green, and quinacridone red were obtained from low density polyethylene (LDPE) extractions, in which the colorants were incorporated into the polymer at an exaggerated level of three weight percent. FDA considers extraction data from migration testing with LDPE to represent a "worst-case" condition for all polymer types, and, therefore, FDA has determined that for purposes of evaluating exposure and safety, extractions from LDPE represent a worst-case migration rate for all polymers (Ref. 1). Data from agency files have shown that migration from other types of food-contact polymers would be lower and would not alter this safety assessment. The agency thus believes that removal of the proposed restrictions, as requested by the comment for these colorants, would not result in migration levels higher than those for LDPE, which levels FDA considers to be safe.

Zinc carbonate, zinc oxide, and cobalt oxide-aluminum oxide, which were listed in the 1972 proposal, are already approved for use without limitations in polyolefins of the type discussed above by virtue of their listing as components of resinous and polymeric coatings complying with § 175.300. The agency finds that the approval of the use of these colorants in other polymers would not result in migration levels higher than those already considered safe (Ref. 1).

Although FDA finds that available safety data support the requested

broader uses for these six colorants, the agency does not have the data needed to assess the environmental impact of the expanded use of each of these colorants. In the absence of this environmental data, FDA is precluded from removing the use restrictions that it included in the 1972 proposal. The agency is therefore requesting, as comments on this tentative final rule, the information necessary to address the environmental effects of the proposed broader uses. The information required is described later in this document under the section entiled, "Environmental Impact." Therefore, FDA has not modified the codified language in this tentative final rule to reflect the changes that were requested by this comment. However, FDA will adopt the requested broader uses if the environmental data support such uses.

III. Comments on the 1983 Final Rules Establishing 21 CFR 178.3297 and Regulating an Optical Brightener

The agency received nine comments on the October 14, 1983 (48 FR 46773 and 48 FR 46774), final rules establishing § 178.3297 *Colorants for polymers* (21 CFR 178.3297), and listing a new optical brightener under § 178.3297. A summary of these comments and the agency's responses follow:

8. One comment expressed concern that only one optical brightener was listed in new § 178.3297 and pointed out that there were other such compounds that should be transferred to new § 178.3297 from other food additive regulations. The comment stated that persons reading the new section will misunderstand the fact that only one optical brightener is listed and conclude that that optical brightener is the only colorant authorized for use in polymers. The comment consequently urged FDA to make certain editorial changes in the regulations.

FDA finds that although only one optical brightener was listed in § 178.3297, the preamble to the October 14, 1983 (48 FR 46773), final rule made clear that the agency intended to transfer to § 178.3297 all currently listed colorants, including optical brighteners. The agency's intention to make these editorial transfers was also stated in the 1972 proposal. FDA is proposing to make these transfers in this tentative final rule.

9. Two comments questioned the definition of the term "colorant" set forth in the October 14, 1983 (48 FR 46773), final rule. The comments noted that FDA has used the term "colorant" to include materials that are actually dyes or pigments. One of the comments included technical definitions for the terms "dye" and "pigment" and stated that dyes, pigments, and colorants should be distinguished in the regulations.

FDA recognizes that it has used a number of terms including "dye" and "pigment" when it has regulated substances for use in imparting color to food-contact materials. FDA did not intend to limit the definition of "colorant" in § 178.3297 to include just a dye or a pigment. The agency is including in this definition any "* * * substance that is used to impart color to, or to alter the color of, a food-contact material."

The agency finds that both dyes and pigments impart color, and because they both have this effect, they both can be considered colorants. The agency additionally finds that there is no need to specify whether a particular colorant is a dye, pigment, or some other type of substance. Section 178.3297 includes any substance that imparts or alters the color of a food-contact material.

The agency concludes that the definition of "colorant" requires no distinction between the types of substances that could be colorants, and that an attempt to make a distinction in § 178.3297 would be cumbersome and would serve no particular purpose. Therefore, the agency has not included definitions for other terms in this tentative final rule and has retained the definition for "colorant" that it included in the 1983 final rule.

10. One comment generally supported FDA's efforts to approve the use of colorants in polymers and suggested that all of the colorants listed in the 1972 proposal be approved for use in pulp and paperboard products. The comment suggested that this expanded use was logical because pulp and paperboard products are made from cellulose fibers, which consist of a linear polymer of repeating β-D-glucopyranose units.

FDA finds that the intent of the 1972 proposal was to list colorants for use in resinous polymeric substances and not for use in paper and paperboard products. Because the physical properties of pulp and paperboard products are significantly different from resinous polymers, the use of these colorants in, and their migration from, paper and paperboard are expected to be significantly different from their use in, and migration from, resinous polymers. Consequently, the agency would need specific data on the use of colorants in paper and paperboard before it can approve such use. At the present time, safety and extraction data are inadequate, or not available, to support such use of all of the colorants listed in the 1972 proposal. Therefore, a food additive petition must be submitted to support the requested expanded use of these colorants in paper and paperboard products.

11. One comment from an organization objected to both of the final rules but did not request a hearing. The comment stated that the final rule establishing § 178.3297 (48 FR 46773) did not make clear whether the colorant listed in this regulation contained a carcinogen, or what actions, if any, FDA had taken with respect to this colorant if the colorant did contain such a chemical, knowing that there is a prohibition in the Delaney clause against approving carcinogenci food additives. The comment requested that FDA clarify this matter, and that the agency stay the regulation until the organization that submitted the comment was given an opportunity to comment further on the agency's response.

The organization also objected to the regulation listing 2,2'-(2,5-thiophenediyl)bis(5-*tert*-butylbenzoxazole) as an optical brightener (48 FR 46774) because the regulation did not discuss the health effects of use of this colorant. The comment stated that other optical brighteners have been shown to be photocarcinogenic (Ref. 2) and have shown evidence of mutagenicity (Ref. 3). The comment requested that FDA supply a copy of the studies that support that the use of 2,2'-(2,5-thiophenediyl)bis(5-*tert*-butylbenzoxazole) is safe and stay the regulation for this colorant until the organization submitted supplemental comments on the studies.

On March 5, 1984, FDA sent the organization the requested copy of the safety studies on 2,2'-(2,5-thiophenediyl)bis(5-*tert*-butylbenzoxazole). The agency explained in a letter to this organization, dated June 15, 1984, that FDA would permit the organization to submit supplementary objections on the regulated uses of this optical brightener and would render a final decision after the agency had received and reviewed those supplementary objections. FDA also explained that it does not routinely discuss in its final rules details of the safety and functionality studies that are submitted by petitioners and evaluated by the agency. The agency pointed out, however, that as stated in the final rule on 2,2'-(2,5-thiophenediyl)bis(5-*tert*-butylbenzoxazole), these materials are publicly available.

The agency also explained that FDA believes that its final rule establishing § 178.3297 (48 FR 46773), and the final

rule listing the use of 2,2'-(2,5-thiophenediyl)bis(5-*tert*-butylbenzoxazole) as a colorant for polymers (48 FR 46774), made clear that colorants are indirect food additives subject to the provisions of section 409 of the act (21 U.S.C. 348), including the Delaney clause (21 U.S.C. 348(c)(3)(A)). FDA informed the organization that the agency makes its determination about the types of toxicology studies that are necessary to demonstrate that the use of a colorant is safe, as it does for other food additives, on the basis of the chemical structure of the substance and the level of human exposure to it.

The agency assured the organization that if the possibility exists that a colorant contains a carcinogenic chemical as an impurity, FDA will conduct a risk assessment as part of its safety evaluation and will include a discussion of the risk assessment in the preamble to the final regulation on the use of that substance. The agency also informed the organization that it would reopen the comment period for 30 days to receive any comments on the agency's regulation establishing § 178.3297.

FDA did not receive any additional comments from this organization during the reopened comment periods announced on June 22, 1984 (49 FR 25630) and on August 1, 1984 (49 FR 30689). The organization also did not submit any supplementary objections on the agency's regulation listing 2,2'-(2,5-thiophenediyl)bis(5-*tert*-butylbenzoxazole) as a colorant for certain polymers (48 FR 46774) or any comments on the June 15, 1984, letter. FDA, therefore, contacted this organization regarding whether it intended to submit any additional objections to the agency. The organization replied that it had not prepared any additional objections, and that it did not intend to submit any further comments or objections on the regulation. Because of this reply, the agency finds that the original concerns of the organization are moot.

FDA has, however, reviewed the two studies reported by the organization.

The agency finds that the photocarcinogenicity study cited in the organization's objection did not test 2,2'-(2,5-thiophenediyl)bis(5-*tert*-butylbenzoxazole) but tested other optical brighteners under conditions that produced a carcinogenic response only when mice were exposed to both the optical brightener dissolved in dimethyl sulfoxide solvent and high-energy ultraviolet light (217 to 270 nanometer wavelength) for 6 hours daily. The authors of the study acknowledged that the ultraviolet light and dimethyl sulfoxide solvent, without the optical brighteners, produced a tumorigenic effect on the skin of mice. Because of this effect, FDA finds that this study was not adequately designed to test the toxicity of the optical brightener, and that no evaluation of the safety of the optical brightener in question can be made on the basis of this study because the optical brightener was never actually tested.

The agency finds that the mutagenicity study referenced in the organization's objection (Ref. 3) concerning 2,2'-(2,5-thiophenediyl)bis(5-*tert*-butylbenzoxazole) did not test this substance. The study involved optical brighteners of similar structure to the compound in question but not that specific compound. Although the study indicates that petite mutants are produced in yeast by the substances tested, such a finding is not conclusive. It would be necessary to perform a battery of mutagenic studies on the substances tested before a conclusion could be drawn that they are mutagenic. Therefore, the agency concludes that no relevant conclusions can be drawn regarding this colorant from this study. FDA has also reexamined the results of an acute oral toxicity study submitted by the petitioner in support of the safety of the optical brightener. Based on this review, FDA concludes that, at the low level of exposure to the substance that results from its use as an optical brightener, this study supplies sufficient safety data to support its listing under the conditions of use set forth in the regulation.

12. Two comments stated that substitution of the word "polymers" for "plastics" in the October 14, 1983 (48 FR 46773), final rule establishing § 178.3297 was not appropriate. The comments stated that the term "polymer"; usually means a macro-molecular substance, whereas food-contact articles are not composed of polymers alone but of polymers plus stabilizers, lubricants, plasticizers, and other materials. The comments argued that these food-contact products are more accurately referred to as "plastics."

FDA disagrees with these comments. The agency stated in the 1983 final rule that the term "polymers" was used in the title "Colorants for polymers" because it is scientifically more precise than the term "plastics." The most common definition for the word "plastic" means capable of being molded or modeled. As applied to organic synthesis it is a shortened version of the term "thermoplastic," which refers to a type of material that, as a finished article, can be softened by an increase of temperature and hardened by a decrease of temperature. The term "polymer" is more precise in that it refers to a specific material that results from a polymerization reaction and that, in final form, cannot be substantially changed.

The agency finds that the listing of colorants in a section entitled "Colorants for polymers" is consistent with the current listing in the Code of Federal Regulations of food additives under part 177 "Indirect Food Additives: Polymers" (21 CFR Part 177).

Additionally, the agency finds that the term "polymer" is consistent with the original intent of the 1972 proposal to list colorants for use in specified food-contact polymers. Although the 1972 proposal used the term "plastic," careful scrutiny of the limitations in the proposal clearly demonstrates that the agency intended to allow the use of colorants in specific polymers. The limitations in the proposal provide adequate examples of polymers as the appropriate vehicles to contain a colorant. The agency, therefore, has decided to retain the word "polymer" in the title of § 178.3297.

13. One comment observed that in the 1972 proposal, color additives listed for direct use in food were proposed for use as colorants in polymers. The comment urged FDA to include all color additives that are listed for use in ingested drugs and cosmetics, and the lakes of these color additives, as colorants for polymers. The comment stated that available data supporting the safe use of ingested D&C color additives should also be adequate to support their safe use as colorants for polymers in contact with food.

The agency agrees with this comment. The agency finds that there will be no significant increase in human exposure from use of permanently listed color additives that are currently used in ingested drugs and ingested cosmetics if these color additives are also used as colorants in polymers that contact food. Additionally, the toxicological and other data that have been submitted to support the safety of the use of permanently listed color additives in foods, ingested drugs, and ingested cosmetics are considerably more extensive than the data required to support the safety of the use of colorants in food-contact polymers. However, FDA does not have the data needed to assess the environmental impact of the expanded use of ingested D&C color additives and their lakes for use as colorants in polymers. In the absence of this environmental data, the agency is precluded from including these color additives in this tentative final rule. The

agency is therefore requesting, as comments on this tentative final rule, the information necessary to address this deficiency in the final rule. The information required is described later in this document under the section entitled, "Environmental Impact."

14. One comment stated that the definition of "colorant" in new § 178.3297 is misleading because it includes substances that are not colored, such as optical brighteners.

The agency agrees that optical brighteners and fluorescent whiteners may not themselves be colored, and that they may not directly impart color to food-contact materials. However, as defined in § 178.3297, the term "colorant" includes substances that alter or otherwise affect the color of food-contact materials. This definition includes optical brighteners and fluorescent whiteners because they affect the color of food-contact materials. The agency, therefore, does not agree that the definition of "colorant" is misleading or ambiguous in this respect. For this reason, FDA has not made any change in § 178.3297 in response to this comment.

15. One comment requested that the substance ultramarine violet be added to the list of colorants. The comment claimed that ultramarine violet is simply a very red shade of ultramarine blue, and that it is no different in chemical structure, formula, and stability than ultramarine blue. The comment referred to FDA opinion letters that offered no object to the use of ultramarine violet as a colorant in polymers.

The agency agrees with this comment. Ultramarine blue is listed as a colorant for food-contract materials in 21 CFR 178.3970. However, the color additive regulation for ultramarines in 21 CFR 73.2725 makes clear that ultramarines vary in color (blue, green, pink, red, and violet) depending upon the amount of kaolin, sulfur, sodium carbonate, silicaceous matter, sodium sulfate, and carbonaceous matter included in a calcined mixture of some or all of these substances. The regulation also makes clear that ultramarines are stable complexes of sodium aluminum sulfosilicates, having a typical formula of Na(A1SiO)S, and that the predominant color is dependent upon the proportion of each element in the formula.

Because of these chemical similarities, FDA has tentatively concluded that ultramarine violet may be safely used as an alternative to ultramarine blue as a colorant for polymers. The agency also tentatively concludes that because of these chemical similarities, and because there is no toxicological concern about the use of any of the different ultramarine shades as colorants in polymers, all ultramarine colors can be listed for this use. The agency is, therefore, including all shades of ultramarine under the colorant listing of ultramarines in this tentative final rule.

IV. Scope of the Tentative Final Rule

In this section, FDA is setting forth the changes that it intends to make in the food additive regulations to provide a comprehensive listing under § 178.3297 of colorants allowed for use in food-contact polymers.

FDA is proposing to list in one regulation all of the colorants permitted for use in food-contact polymers. This tentative final rule also proposes to permit the use of those color additives and their lakes that are permanently listed for direct addition to food. Because this broad approval includes a large number of color additives, FDA is not listing each of them under 21 CFR 178.3297 but is including their use by a general cross-reference in paragraph (d).

FDA currently designates the pigments and colorants allowed for use in paper and paperboard in § 176.170 *Components of paper and paperboard in contact with aqueous and fatty foods* (21 CFR 176.170) by means of a cross-reference in § 176.170(b)(1) to 21 CFR 175.300(b)(3)(xxvi). Because FDA is proposing to remove the list of colorants from § 175.300(b)(3)(xxvi) and replace it with a general reference to § 178.3297, this cross-reference is no longer appropriate. Therefore, FDA is proposing to individually list under 21 CFR 176.170(b)(2) those colorants that are approved for use in food contact paper and paperboard.

FDA is also proposing to modify the name of the substance listed as "cobalt oxide-aluminum oxide" in the 1972 proposal. The agency finds that the term "cobalt aluminate" is a more appropriate name. This colorant is a calcination product of cobalt oxide and aluminum oxide and not a mixture of cobalt oxide and aluminum oxide, as the term used in the 1972 proposal suggests.

In addition, FDA is making a number of editorial changes to its regulations in this tentative final rule:

(1) Instead of listing specific colorants, FDA is including a cross reference to § 178.3297 in paragraph (b)(3)(xxvi) of § 175.300 *Resinous and polymeric coatings;* § 177.1350 *Ethylene-vinyl acetate copolymers;* § 177.1460 *Melamine-formaldehyde resins in molded articles;* § 177.1520 *Olefin polymers;* § 177.1680 *Polyurethane resins;* § 177.2260 *Filters, resin-bonded;* § 177.2600 *Rubber articles intended for repeated use;* and § 177.2800 *Textiles and textile fibers;*

(2) Paragraph (c) of § 178.3297 *Colorants for polymers* is being revised to reflect a change in the mailing address of FDA's Division of Food and Color Additives.

In the table below, FDA is listing the colorants that the agency is proposing to include in § 3279. In the "Sources" column, FDA sets forth the basis for including the substance in this regulation. If the agency is including a substance in § 178.3297 because that substance is already approved for use in polymers, FDA is setting forth the current listing of the substance. If the agency is including the substance in response to the 1972 proposal, that fact is reflected in the "Sources" column. The "Comments" column identifies the permissible uses of the substance and identifies any changes the agency is proposing to make in Parts 175, 177, and 178 in the food additive regulations as a result of this action.

SUBSTANCES TENTATIVELY TO BE LISTED UNDER § 178.3297 COLORANTS FOR POLYMERS

Substances	Sources	Comments
1. Aluminum.	1972 Proposal, § 175.300(b)(3)(xxvi)	Permitted for use in all polymers without limitations.
2. Aluminum hydrate.	do	Do.
3. Aluminum and potassium silicate (mica)	do	Do.
4. Aluminum mono-, di-, and tristearate.	do	Do.
5. Aluminum silicate (China clay).	do	Do.
6. Barium sulfate.	do	Do.
7. Bentonite.	do	Do.
8. Bentonite, modified with dimethyldiocta-decyl-ammonium ion.	do	Do.

SUBSTANCES TENTATIVELY TO BE LISTED UNDER § 178.3297 COLORANTS FOR POLYMERS—Continued

Substances	Sources	Comments
9. 4,4'-Bis(4-anilino-6-diethanolamine-a-(triazin-2-ylamno)-2,2'-stilbene-disulfonic acid, disodium salt.	§ 177.2800(d)(5)	Permitted for use only as described in source regulation which is transferred to § 178.3297.
10. Burnt umber	1972 Proposal, § 175.300(b)(3)(xxvi)	Permitted for use in all polymers without limitations.
11. Calcium carbonate	do	Do.
12. Calcium silicate	do	Do.
13. Calcium sulfate	do	Do.
14. Carbon black (channel process, prepared by the impingement process from stripped natural gas).	do	Permitted for use in all polymers without limitations. Use of carbon black is limited to the channel-process type. See comment No. 3.
15. Chromium oxide green, Cr_2O_3 (C.I. pigment green 17, C.I. No. 77288).	1972 Proposal, § 177.2600(c)(4)(vi)	Permitted for use in polymers with limitations included in the 1972 proposal. Environmental data requested for use in additional polymers. See comments' Nos. 6 and 7. The agency notes that the chrome oxide listing in § 177.2600 actually refers to chromium oxide green.
16. Cobalt aluminate	1972 Proposal, § 175.300(b)(3)(xxvi)	Permitted for use in polymers with limitations included in the 1972 proposal. Environmental data requested for use in additional polymers. See comment No. 7. Nomenclature revised for accuracy. See Section IV.
17. Diatomaceous earth	do	Permitted for use in all polymers without limitations.
18. Iron oxides	1972 Proposal, § 175.300(b)(3)(xxvi), and § 177.2600(c)(4)(vi).	Do.
19. Magnesium oxide	1972 Proposal, § 175.300(b)(3)(xxvi)	Do.
20. Magnesium silicate (talc)	do	Do.
21. 7-(2*H*-Naphtho[1,2*d*]triazol-2-yl)-3-phenylcoumarin (CAS Reg. No. 3333-62-8) having a melting point of 250 to 251 °C and a nitrogen content of 10.7 to 11.2 percent.	§ 177.1520(b) and § 177.2800(d)(5)	Permitted for use only as described in source regulations which are transferred to § 178.3297.
22. Phthalocyanine blue (C.I. pigment blue 15, C.I. No. 74160).	1972 Proposal, § 175.300(b)(3)(xxvi), § 177.2260(d)(5), § 177.2600(c)(4)(vi).	Permitted for use in all polymers without limitations.
23. Phthalocyanine green (C.I. pigment green 7, C.I. No. 74260).	1972 Proposal, § 177.2600(c)(4)(vi)	Permitted for use in polymers with limitations included in the 1972 proposal. Environmental data requested for use in additional polymers. See comments' Nos. 6 and 7. The agency notes that the "phthalocyanine" listing in § 177.2600 actually refers to phthalocyanine green. green.
24. Pigment red 38 (C.I. No. 21120)	§ 177.2600(c)(4)(vi)	Permitted for use only as described in source regulation which is transferred to § 178.3297.
25. Quinacridone red (C.I. pigment violet 19, C.I. No. 46500).	1972 Proposal	Permitted for use in polymers with limitations included in the 1972 proposal. Environmental data requested for use in additional polymers. See comments' Nos. 6 and 7.
26. Sienna (raw and burnt)	1972 Proposal, § 175.300(b)(3)(xxvi)	Permitted for use in all polymers without limitations. See comment No. 5.
27. Silica	do	Permitted for use in all polymers without limitations.
28. Tartrazine lake (certified FD&C Yellow No. 5 only).	§ 175.300(b)(3)(xxvi)	Permitted for use only as described in source regulation which is transferred to § 178.3297.
29. Titanium dioxide	1972 Proposal, § 175.300(b)(3)(xxvi) and § 177.2600(c)(4)(vi).	Do.
30. Titanium dioxide-barium sulfate	1972 Proposal, § 175.300(b)(3)(xxvi)	Do.
31. Titanium dioxide-magnesium silicate	do	Do.
32. Ultramarines (pink, red, blue green, violet).	1972 Proposal, § 178.3970	Permitted for use in all polymers without limitations. See comment No. 15. Nomenclature revised for accuracy. Section 178.3970 is removed from the food additive regulations and transferred to § 178.3297.
33. Zinc carbonate	1972 Proposal, § 175.300(b)(3)(xxvi)	Permitted for use in polymers with limitations included in the 1972 proposal. Environmental data requested for use in other polymers. See comment No. 7.
34. Zinc chromate	§ 177.2600(c)(4)(vi)	Permitted for use only as described in source regulation which is transferred to § 178.3297
35. Zinc oxide	1972 Proposal, § 175.300(b)(3)(xxvi)	Permitted for use in polymers with limitations included in the 1972 proposal. Environmental data requested for use in other polymers. See comment No. 7.

Environmental Impact

The food additive petitions on which the 1972 proposal was based did not include a consideration of the environmental impact because those petitions were submitted before there was any requirement to consider the environmental impact of a final rule. However, before FDA can take final action on the petitions that are the subject of this tentative final rule, FDA must meet its obligations under the National Environmental Policy Act.

Even before the 1972 proposal was published, FDA had issued many opinion letters stating that the colorants listed in the proposed rule, including color additives listed for direct use in food, could be used in food-contact polymers. Since FDA has permitted these color additives to be used in polymers for a long period of time, the agency expects that its action to include them in this tentative final rule will not affect the market volume or use level of the colorants. Based on this finding, the agency has determined under 21 CFR 25.24(a)(9) that its action, to include in the tentative final rule those colorants listed in the 1972 proposal, is of a type that does not individually or cumulatively have a significant effect on the human environment. Therefore, neither an environmental assessment nor an environmental impact statement is required.

Several comments submitted on the 1972 proposed rule requested that FDA approve for general use in all polymers those colorants that the agency proposed to limit to use in specific

polymers. The colorants included in this request are chromium oxide green, cobalt oxide-aluminum oxide (now colbalt aluminate (see Section IV of the preamble)), phthalocyanine green, quinacridone red, zinc carbonate, and zinc oxide. In addition, one comment requested that FDA include all color additives that are listed for use in ingested drugs and cosmetics, and the lakes of these color additives, as colorants for polymers.

FDA does not have the data needed to assess the environmental impact of the expanded use of these colorants and color additives. To address this deficiency and to permit the agency to include these expanded uses in the final rule, interested persons must submit the data for each colorant of interest in an environmental assessment. Based on the assumption that the colorants would be present in the finished food packaging material at not greater than 5 percent by weight, these environmental data may be submitted in the abbreviated environmental assessment format specified in 21 CFR 25.31a(b)(1) within the comment period. The agency also encourages interested persons to obtain further guidance on the submission of the required environmental data by contacting the agency contact person (address above).

Economic Impact

FDA, in accordance with the Regulatory Flexibility Act, has considered the effect that this regulation would have on small entities, including small businesses, and has determined that the effect of this regulation is to maintain current known uses of colorants for polymers. This action merely formalizes the approvals FDA has been providing in informal advisory opinion letters during the past 25 years. Therefore, FDA certifies in accordance with section 605(b) of the Regulator Flexibility Act that no significant economic impact on a substantial number of small entities will derive from this action.

The agency's findings of no major economic impact and of no significant impact on a substantial number of small entities, and the evidence supporting these findings, are contained in the threshold assessment which may be seen in the Dockets Management Branch (address above).

References

The following references have been placed on display in the Dockets Management Branch (address above) and may be reviewed in that office between 9 a.m. and 4 p.m., Monday through Friday.

1. Memorandum for the Record, dated January 28, 1988, entitled "Colorants for polymers: extraction testing," by Gregory Cramer, Division of Food Chemistry and Technology.

2. Bingham, E., and H. L. Falk, "Combined Action of Optical Brighteners and Ultraviolet Light in the Production of Tumors," *Food and Cosmetics Toxicology*, 8:173, 1970.

3. Gilberg, B. O., and J. Aman, "Petite Mutants Induced in Yeast by Optical Brighteners," *Mutation Research*, 13:149, 1971.

Comments

Interested persons may, on or before June 6, 1988, submit to the Dockets Management Branch (address above) written comments regarding this tentative final rule. Two copies of any comments are to be submitted, except that individuals may submit one copy. Comments are to be identified with the docket number found in brackets in the heading of this document. Received comments may be seen in the office above between 9 a.m. and 4 p.m., Monday through Friday.

List of Subjects

21 CFR Part 175

Adhesives, Food additives, Food packaging.

21 CFR Part 176

Food additives, Food packaging.

21 CFR Part 177

Food additives, Food packaging.

21 CFR Part 178

Food additives, Food packaging, Sanitizing solutions.

Therefore, under the Federal Food, Drug, and Cosmetic Act and under authority delegated to the Commissioner of Food and Drugs, it is proposed that Parts 175, 176, 177, and 178 be amended as follows:

PART 175—INDIRECT FOOD ADDITIVES: ADHESIVES AND COMPONENTS OF COATINGS

1. The authority citation for 21 CFR Part 175 continues to read as follows:

Authority: Secs. 201(s), 409, 72 Stat. 1784–1788 as amended (21 U.S.C. 321(s), 348); 21 CFR 5.10 and 5.61.

2. Section 175.300 is amended by revising paragraph (b)(3)(xxvi) to read as follows:

§ 175.300 Resinous and polymeric coatings.

* * * * *

(b) * * *

(3) * * *

(xxvi) Colorants complying with § 178.3297 of this chapter.

* * * * *

PART 176—INDIRECT FOOD ADDITIVES: PAPER AND PAPERBOARD COMPONENTS

3. The authority citation for 21 CFR Part 176 continues to read as follows:

Authority: Secs. 201(s), 409, 72 Stat. 1784–1788 as amended (21 U.S.C. 321(s), 348); 21 CFR 5.10 and 5.61.

4. Section 176.170 is amended in paragraph (b)(1) by adding "(xxvi)" after "(xx)" and in paragraph (b)(2) by alphabetically inserting 27 items in the table under the heading "List of substances" with their corresponding entries under the heading "Limitations" to read as follows:

§ 176.170 Components of paper and paperboard in contact with aqueous and fatty foods.

* * * * *

(b) * * *

(2) * * *

List of substances	Limitations
* * *	* *
Aluminum	For use as a colorant only.
Aluminum hydrate	Do.
Aluminum and potassium silicate (mica).	Do.
Aluminum mono-, di-, tristearate.	Do.
Aluminum silicate (China clay).	Do.
Barium sulfate	Do.
Bentonite	Do.
Bentonite, modified with dimethyldioctadecyl-ammonium ion.	Do.
* * *	* *
Burnt umber	For use as a colorant only.
* * *	* *
Calcium carbonate	For use as a colorant only.
Calcium silicate	Do.
Calcium sulfate	Do.
* * *	* *
Carbon black (channel process).	For use as a colorant only.
* * *	* *
Cobalt aluminate	For use as a colorant only.
* * *	* *
Diatomaceous earth	For use as a colorant only.
* * *	* *
Iron oxides	For use as a colorant only.
* * *	* *
Magnesium oxide	For use as a colorant only.
Magnesium silicate (talc)	Do.
* * *	* *
Phthalocyanine blue (C.I. pigment blue 15, C.I. No. 74160).	For use as a colorant only.
* * *	* *
Raw sienna	For use as a colorant only.

List of substances	Limitations
Silica	Do.
* * * * *	
Tartrazine lake (certified FD&C Yellow No. 5 only).	For use as a colorant only.
* * * * *	
Titanium dioxide	For use as a colorant only.
Titanium dioxide-barium sulfate.	Do.
Titanium dioxide-magnesium silicate.	Do.
* * * * *	
Zinc carbonate	For use as a colorant only.
Zinc oxide	Do.

* * * * *

PART 177—INDIRECT FOOD ADDITIVES: POLYMERS

5. The authority citation for 21 CFR Part 177 continues to read as follows:

Authority: Secs. 201(s), 409, 72 Stat. 1784–1788 as amended (21 U.S.C. 321(s), 348); 21 CFR 5.10 and 5.61.

6. Section 177.1350 is revised in paragraph (a)(3) to read as follows:

§ 177.1350 Ethylene-vinyl acetate copolymers.

* * * * *

(a) * * *

(3) Substance identified in § 175.300(b)(3)(xxv), (xxvii), (xxx), and (xxxiii), and colorants complying with § 178.3297 of this chapter.

* * * * *

7. Section 177.1460 is amended in paragraph (b) by removing the table entry "Pigments and colorants identified in § 175.300(b)(3)(xxvi) of this chapter." under the heading "List of substances" and by alphabetically adding a new table entry to read as follows:

§ 177.1460 Melamine-formaldehyde resins in molded articles.

* * * * *

(b) * * *

List of substances	Limitations
Colorants complying with § 178.3297 of this chapter.	
* * * * *	

* * * * *

8. Section 177.1520 is amended in the table in paragraph (b) by removing the entry "7-(2*H*-Napththo[1,2-*d*]triazol-2-yl)-3-phenylcoumarin [Chemical Abstracts Service Registry No. 3333-62-8] having a melting point of 250 ° to 251 °C and a nitrogen content of 10.7 to 11.2 percent." under the heading "Substance," and the corresponding entry under the heading "Limitations," and by alphabetically adding a new item to read as follows:

§ 177.1520 Olefin polymers.

* * * * *

(b) * * *

Substance	Limitations
Colorants complying with § 178.3297 of this chapter	
* * * * *	

* * * * *

9. Section 177.1680 is amended in the table in paragraph (b) by removing the items "Phthalocyanine blue (C.I. pigment blue 15, C.I. No. 74160)" and "Ultramarine blue" under the heading "List of Substances," and their corresponding entries under the heading "Limitations," and by alphabetically adding a new table item to read as follows:

§ 177.1680 Polyurethane resins.

* * * * *

(b) * * *

List of substances	Limitations
* * * * *	
Colorants complying with § 178.3297 of this chapter	
* * * * *	

* * * * *

10. Section 177.2260 is amended by alphabetically adding a new item to paragraph (d)(5) to read as follows:

§ 177.2260 Filters, resin-bonded.

* * * * *

(d) * * *

(5) * * *

Colorants complying with § 178.3297 of this chapter.

* * * * *

11. Section 177.2600 is amended by revising paragraph (c)(4)(vi) to read as follows:

§ 177.2600 Rubber articles intended for repeated use.

* * * * *

(c) * * *

(4) * * *

(vi) *Colorants.*

Colorants complying with § 178.3297 of this chapter.

* * * * *

12. Section 177.2800 is amended in the table in paragraph (d)(5)(ii) by removing the items "4,4'-Bis(4-anilino-6-diethanolamine-*a*-triazin-2-ylamino)-2,2'-stilbene-disulfonic acid, disodium salt," and "7-(2*H*-Naphtho[1,2-*d*]triazol-2-yl)-3-phenylcoumarin [CAS Reg. No. 3333-62-8] having a melting point of 250 ° to 251 °C and a nitrogen content of 10.7 to 11.2 percent." under "List of substances," and their corresponding entries under the heading "Limitations," and by alphabetically adding a new table item, to read as follows:

§ 177.2800 Textiles and textile fibers.

* * * * *

(d) * * *

(5) * * *

List of substances	Limitations
* * * * *	
(ii) Adjuvant substances:	
* * * * *	
Colorants complying with § 178.3297 of this chapter.	
* * * * *	

* * * * *

PART 178—INDIRECT FOOD ADDITIVES: ADJUVANTS, PRODUCTION AIDS, AND SANITIZERS

13. The authority citation for 21 CFR Part 178 continues to read as follows:

Authority: Secs. 201(s), 409, 72 Stat. 1784–1788 as amended (21 U.S.C. 321(s), 348), 21 CFR 5.10 and 5.61.

14. Section 178.3297 is amended by revising paragraph (c), by adding new paragraph (d), and by alphabetically adding new items to the table in paragraph (e) to read as follows:

§ 178.3297 Colorants for polymers.

* * * * *

(c) The colorant must conform to the specifications and extraction limits where indicated. Conformance to the extraction limits must be determined by established methods or their equivalent. Copies of the analytical methods and extraction procedures are available free of charge upon request from the Center for Food Safety and Applied Nutrition, Division of Food and Color Additives (HFF-335), Food and Drug Administration, 200 C Street SW., Washington, DC 20204. If the finished food-contact article is itself the subject of a regulation promulgated under section 409 of the act, it shall also comply with any specifications and limitations prescribed for it by that regulation.

(d) Color additives and their lakes permanently listed for direct use in foods, under the provisions of the color additive regulations in Parts 73 and 74 of this chapter, may also be used as colorants for food-contact polymers.

(e) List of substances:

Substances	Limitations
Aluminum.	
Aluminum hydrate.	
Aluminum and potassium silicate (mica).	
Aluminum mono-, di-, and tristearate.	
Aluminum silicate (China clay).	
Barium sulfate.	
Bentonite.	
Bentonite, modified with dimethyldioctadecyl-ammonium ion.	
4,4'-Bis(4-anilino-6-diethanolamine-*a*-triazin-2-ylamino)-2,2'-stilbene-disulfonic acid, disodium salt.	For use only in cotton, polyethylene terephthalate, and rayon as specified in § 177.2800 of this chapter.
Burnt umber.	
Calcium carbonate.	
Calcium silicate.	
Calcium sulfate.	
Carbon black (channel process, prepared by the impingement process from stripped natural gas).	
Chromium oxide green, Cr_2O_3 (C.I. pigment green 17, C.I. No. 77288).	For use only in olefin polymers complying with § 177.1520 of this chapter.
Cobalt aluminate	For use only: (1) In resinous and polymeric coatings complying with § 175.300 of this chapter. (2) Melamineformaldehyde resins in molded articles complying with § 177.1460 of this chapter. (3) Xylene-formaldehyde resins condensed with 4-4'-isopropyl-idenediphenol-epichlorohydrin epoxy resins complying with § 175.380 of this chapter. (4) Ethylenevinyl acetate copolymers complying with § 177.1350 of this chapter. (5) Urea-formaldehyde resins in molded articles complying with § 177.1900 of this chapter.
Diatomaceous earth.	
Iron oxides.	
Magnesium oxide.	
Magnesium silicate (talc).	
7-(2*H*-Naphtho[1,2-*d*]triazol-2-yl)-3-phenyl-coumarin [CAS Reg. No. 3333-62-8] having a melting point of 250 to 251 °C and a nitrogen content of 10.7 to 11.2 percent.	For use as an optical brightener only in: (1) Olefin polymers complying with § 177.1520 of this chapter only at levels such that the product of concentration of the optical brightener (expressed in parts per million by weight of the olefin polymer) multiplied by the thickness of the olefin polymer (expressed in thousandths of an inch and limited to no more than 0.400 inch) shall not exceed 500; provided that the level of the brightener shall not exceed 20 parts per million by weight of the olefin polymer, and further that the olefin polymers shall comply with specifications for items 1.1, 2.1, 3.1, 3.3, and 4 of § 177.1520(c) of this chapter. The polymer may be used under the conditions described in § 176.170(c) of this chapter, Table 2, under conditions of use E, F, and G. (2) Polyethylene terephthalate specified in § 176.2800(d)(5)(i) of this chapter at a level not to exceed 0.035 percent by weight of the finished fibers.
* * *	* * *
Phthalocyanine blue (C.I. pigment blue 15, C.I. No. 74160).	
Phthalocyanine green (C.I. pigment green 7, C.I. No. 74260).	For use only in olefin polymers complying with § 177.1520 of this chapter.
Pigment red 38 (C.I. No. 21120).	For use only in olefin rubber articles for repeated use complying with § 177.2600 of this chapter; total use is not to exceed 10 percent by weight of rubber article.
Quinacridone red (C.I. pigment violet 19, C.I. No. 46500).	For use only in olefin polymers complying with § 177 1520 of this chapter.
Sienna (raw and burnt).	
Silica.	
Tartrazine lake (certified FD&C Yellow No. 5 only).	For use only as a component of resinous and polymeric coatings complying with § 177.300 of this chapter.
* * *	* * *
Titanium dioxide.	
Titanium dioxide-barium sulfate.	
Titanium dioxide-magnesium silicate.	
Ultramarines (pink, red, blue, green, violet).	As identified in § 73.2725 of this chapter
Zinc carbonate	For use only: (1) In resinous and polymeric coatings complying with § 175.300 of this chapter. (2) Melamineformaldehyde resins in molded articles complying with § 177.1460 of this chapter. (3) Xylene-formaldehyde resins condensed with 4-4'-isopro-pylidene-diphenol-epichlorohydrin epoxy resins complying with § 175.380 of this chapter. (4) Ethylenevinyl acetate copolymers complying with § 177.1350 of this chapter. (5) Urea-formaldehyde resins in molded articles complying with § 177.1900 of this chapter.
Zinc chromate	For use only in rubber articles for repeated use complying with § 177.2600 of this chapter; total use is not to exceed 10 percent by weight of rubber article.
Zinc oxide	For use only: (1) In resinous and polymeric coatings complying with § 175.300 of this chapter. (2) Melamineformaldehyde resins in molded articles complying with § 177.1460 of this chapter. (3) Xylene-formaldehyde resins condensed with 4-4'-isopropylidene-diphenol-epichlorohydrin epoxy resins complying with § 175.380 of this chapter. (4) Ethylenevinyl acetate copolymers complying with § 177.1350 of this chapter. (5) Urea-formaldehyde resins in molded articles complying with § 177.1900 of this chapter
* * *	* * *

§ 178.3970 [Removed]

15. Section 178.3970 *Ultramarine blue* is removed.

Dated: March 28, 1988.

John M. Taylor,

Associate Commissioner for Regulatory Affairs.

[FR Doc. 88-7425 Filed 4-5-88; 8:45 am]

BILLING CODE 4160-01-M

Federal Register

Wednesday
April 6, 1988

Part IV

Department of Labor

Occupational Safety and Health Administration

29 CFR Part 1910

Occupational Exposure to Ethylene Oxide; Final Standard

DEPARTMENT OF LABOR

Occupational Safety and Health Administration

29 CFR Part 1910

[Docket No. H-200B]

Occupational Exposure to Ethylene Oxide

AGENCY: Occupational Safety and Health Administration (OSHA), Labor.

ACTION: Final standard.

SUMMARY: By this notice, the Occupational Safety and Health Administration (OSHA) amends its existing standard that regulates occupational exposure to ethylene oxide (29 CFR 1910.1047) by adopting an excursion limit for ethylene oxide (EtO) of 5 parts of EtO per million parts of air (5 ppm) averaged over a sampling period of 15 minutes.

Where the excursion limit is exceeded, employers are obligated to reduce exposure through implementation of feasible engineering controls and work practices, supplemented by the use of respirators where necessary. In addition, employers are required to establish and implement a written compliance program to achieve the excursion limit, establish exposure monitoring and training programs for employees subjected to EtO exposure above the excursion limit, identify as regulated areas any locations where airborne concentrations of EtO normally exceed the excursion limit, and affix warning labels on products capable of releasing EtO to the extent that an employee's exposure would foreseeably exceed the excursion limit.

DATES: For the purposes of 29 CFR 1911.18(d), this document will be officially filed in the Office of the Federal Register at 12:00 p.m. on Monday, April 4, 1988.

This final standard shall become effective June 6, 1988, except the following paragraphs which contain information collection requirements pertinent to the excursion limit which are under review at OMB: § 1910.1047 (a)(2), (d), (f)(2), (g)(3), and (j).

FOR FURTHER INFORMATION CONTACT: Mr. James F. Foster, Occupational Safety and Health Administration, Office of Public Affairs, Room N-3649, U.S. Department of Labor, 200 Constitution Avenue, NW., Washington, DC 20210. Telephone (202) 523-8151.

For additional copies of this notice, contact: OSHA, Office of Publications, U.S. Department of Labor, Room N-3101, Washington, DC 20210, Telephone 202-523-8576.

SUPPLEMENTARY INFORMATION:

I. Events Leading to This Action

On January 26, 1982, OSHA published an Advance Notice of Proposed Rulemaking (47 FR 3566) announcing its intention to reevaluate its existing EtO standard of 50 ppm as an 8-hour TWA. In addition to a request for public comment on the adequacy of 50 ppm as a TWA, comment was also solicited on the question of the necessity of a short-term limit as follows:

> Is a short-term or ceiling limit for EtO exposures necessary and why, and what would be the technological and economic feasibility of complying with that limit? (48 FR 3566)

On April 21, 1983, OSHA published a Notice of Proposed Rulemaking for EtO that proposed to reduce the permissible 8-hour TWA from 50 ppm to 1 ppm (48 FR 17284). Although a specific short-term limit for EtO was not included in the proposed regulatory text, public comment on that issue was solicited by the following questions:

> Is a short-term or ceiling exposure limit for EtO exposure necessary for the PEL or action level in view of recent information regarding increased spontaneous abortions and chromosome changes in workers exposed to EtO? What monitoring methods and control technology are available to meet such a short-term limit and what would be the economic burdens, if any, of such a limit? (48 FR 17284)

and,

> What are the most suitable methods for determining compliance with EtO permissible exposure limits (PEL's) of 0.5 and 1 ppm as 8-hour time-weighted averages and for ceilings ranging from 5 to 50 ppm for 30 minutes or less? What are the problems associated with such monitoring methods? Do they require special training or experience? Are there serious limitations as to the accuracy or precision of the available sampling techniques? (48 FR 17284)

Numerous comments and data were received by OSHA in response to the short-term limit questions set forth in the ANPR and NPRM (Ex. 168). However, the final EtO rule published on June 22, 1984, which lowered the permissible 8-hour TWA from 50 ppm to 1 ppm (49 FR 25734) reserved decision on the question of whether the standard should contain a short-term limit (Ex. 167A). In the June 22, 1984 final rule, OSHA stated that upon its review of comments submitted by the Office of Management and Budget (OMB) pursuant to Executive Order 12291 (Ex. 162), OSHA determined that certain issues relating to a short-term limit were important and merited further consideration. To develop the fullest possible administrative record, all exhibits in the docket relating to the short-term limit (compiled as Ex. 168), were submitted to a number of scientifically qualified peer reviewers for comment, analysis, and criticism. The peer reviewers filed statements that were placed in the public docket. Public comments on the statements filed by the peer reviewers on the issues raised by OMB on the June 14, 1984 draft standard were solicited by a **Federal Register** notice published September 19, 1984 (49 FR 36659).

After a review of the rulemaking record pertaining to the short-term limit, OSHA published a **Federal Register** notice on January 3, 1985 (50 FR 64) announcing its determination that the available health data did not necessitate the establishment of a short-term limit to supplement the 8-hour TWA of 1 ppm. OSHA's decision not to issue a short-term limit for EtO centered on three findings: First, the available health data did not demonstrate the risks from EtO exposure to be dose rate-dependent. In other words, the studies did not indicate that the risk from exposure to a given dose of EtO are greater when that dose is distributed at high concentrations over a short period of exposure during a workday rather than at a lower concentration during a longer period of time. Second, since the effects of EtO are assumed to be *dose* dependent rather than dose-*rate* dependent, OSHA concluded that reduction of the total dose was the critical factor in dealing with the significant risks of EtO exposure. Therefore, the Agency believed that the 1 ppm TWA was sufficient to minimize significant risk, within the bounds of feasibility. Third, in terms of industrial hygiene and methods of controlling EtO, it was felt that compliance with the TWA would in itself necessitate the control of short-term exposures, particularly for employees whose exposure consists primarily of short-term bursts.

Petition for review of OSHA's decision not to adopt a short-term limit for EtO subsequently was filed by the Public Citizen Health Research Group, pursuant to section 6(f) of the OSH Act (29 U.S.C. 655(f)).

On July 25, 1986, the U.S. Court of Appeals for the District of Columbia Circuit issued a decision on the ethylene oxide standard (*Public Citizen Health Research Group* v. *Tyson*, 796 F. 2d 1479) in response to the petition from Public Citizen. In that decision, the Court upheld OSHA's permissible exposure limit of 1 ppm as an 8-hour time-weighted average, finding that OSHA had "complied with the relevant legal standards in promulgating the 1

ppm PEL." 796 F. 2d at 1503. In addition, the Court upheld OSHA's determination that the evidence in the rulemaking record did not establish the existence of a dose-rate relationship for the health effects of EtO. However, the Court rejected OSHA's argument that the lack of such an established dose-rate effect rendered it unnecessary for the Agency to promulgate a short-term limit for EtO. The Court noted:

> The agency recognized that EtO exposures at 1 ppm still allowed a significant health risk * * *. If in fact a STEL would further reduce a significant health risk and is feasible to implement, then the OSH Act *compels* the agency to adopt it (barring alternative avenues to the same result). 796 F. 2d at 1505.

Therefore, the Court said, in order for OSHA to avoid issuing a short-term limit for EtO, the Agency must find either that a short-term limit would have no effect on the significant risk which is still present at 1 ppm TWA, or that a short-term limit is not feasible. If the Agency cannot make either of these two findings, then a short-term limit must be issued. The Court proceeded to remand the EtO standard to the Agency for further proceedings on these issues, specifically directing OSHA to "either adopt a short-term limit or explain why empirical or expert evidence on exposure patterns makes a short-term limit irrelevant to controlling long-term exposures". 796 F. 2d at 1507.

On July 21, 1987 the Court of Appeals for the District of Columbia Circuit issued a further decision on the ethylene oxide rulemaking, in *Public Citizen Health Research Group* v. *Brock*, 823 F. 2d 626. In that decision, the Court clarified its mandate to OSHA by ordering that "OSHA's final decision on the EtO short-term exposure limit is to issue no later than March 1988." 823 F. 2d at 629.

Pursuant to the Court decision, OSHA's proposed rule on EtO was published January 21, 1988 (53 FR 1724). The proposal limited short-term exposures to EtO to 5 ppm averaged over a 15 minute period and contained additional provisions which OSHA believed appropriate. In the preamble to the proposal, OSHA requested public comments, information, and evidence on all issues raised. A public comment period was established running through February 22, 1988. Hearing requests were also to be submitted by February 22, 1988.

An informal public hearing was convened by Administrative Law Judge Stuart Levin on March 3, 1988 pursuant to notice and section 6(b) of the Act (29 U.S.C. 655(b)(3)). The hearing concluded on that date. Post-hearing submissions of data requested by parties at the hearing were received through March 10, 1988; post-hearing comments and briefs from participants in the hearing were received through March 17, 1988.

The entire record was certified by Judge Levin on March 18, 1988 in accordance with 29 CFR 1911.17. Copies of materials contained in the record may be obtained from the Docket Office, Room N-3670, U.S. Department of Labor, 200 Constitution Avenue NW., Washington DC 20210. The final amendment to OSHA's standard on occupational exposure to ethylene oxide is based on full consideration of the entire record of this proceeding, including materials discussed or relied upon in the proposal, the record of the informal hearing, and all written comments and exhibits received.

II. Pertinent Legal Authority

The primary purpose of the Occupational Safety and Health Act (29 U.S.C. 651 *et seq.*) (the Act) is to assure, so far as possible, safe and healthful working conditions for every American worker over the period of his or her working lifetime. One means prescribed by the Congress to achieve this goal is the mandate given to, and the concomitant authority vested in, the Secretary of Labor to set mandatory safety and health standards. The Congress specifically directed that:

> The Secretary, in promulgating standards dealing with toxic materials or harmful physical agents under this subsection, shall set the standard which most adequately assures, to the extent feasible, on the basis of the best available evidence, that no employee will suffer material impairment of health or functional capacity even if such employee has regular exposure to the hazard dealt with by such standard for the period of his working life. Development of standards under this subsection shall be based upon research, demonstrations, experiments, and such other information as may be appropriate. In addition to the attainment of the highest degree of health and safety protection for the employee, other considerations shall be the latest available scientific data in the field, the feasibility of standards, and experience gained under this and other health and safety laws. [Section 6(b)(5)].

Where appropriate, the standards are required to include provisions for labels or other appropriate forms of warning to appraise employees of hazards, suitable protective equipment, exposure control procedures, monitoring and measuring of employee exposure, employee access to the results of monitoring, and training and education. Standards may also prescribe recordkeeping requirements where necessary or appropriate for enforcement of the Act or for the development of information regarding occupational accidents and illnesses [section 8(c)].

In vacating OSHA's 1978 revision to its benzene standard, the Supreme Court required in *Industrial Union Department, AFL-CIO* v. *American Petroleum Institute*, 448 U.S. 601, 64 L. Ed. 2d 1010, 100 S. Ct. 2844 (1980), that before the issuance of a new or revised standard pursuant to section 6(b)(5) of the Act, OSHA must make two theshold findings that: A significant risk exists under the current standard, and that the issuance of a revised standard would reduce or eliminate the risk.

After OSHA has determined that a significant risk exists and that such risk can be reduced or eliminated by the regulatory action, it must set the standard "which most adequately assures, to the extent feasible, on the basis of the best available evidence, that no employees will suffer material impairment of health * * *" (Section 6(b)(5) of the Act). The Supreme Court has interpreted this section to mean that OSHA must enact the most protective standard possible to eliminate a significant risk of material health impairment, subject to the constraints of technological and economic feasibility. *American Textile Manufacturers Institute, Inc.* v. *Donovan*, 452 U.S. 490 (1981).

Authority for this action is also found in section 8(c)(3) of the Act. In general, this section empowers the Secretary to require employers to make, keep, and preserve records regarding activities related to the Act. In particular, section 8(c)(3) gives the Secretary authority to require employers to "maintain accurate records of employee exposures to potentially toxic materials or harmful physical agents which are required to be monitored or measured under section 6."

The Secretary's authority to issue this amendment is further supported by the general rulemaking authority granted in section 8(g)(2) of the Act. This section empowers the Secretary "to prescribe such rules and regulations as he may deem necessary to carry out (his) responsibilities under the Act"—in this case as part of or ancillary to a section 6(b) standard. The Secretary's responsibilities under the Act are defined largely by its enumerated purposes, which include:

> Encouraging employers and employees in their efforts to reduce the number of occupational safety and health hazards at their places of employment, and to stimulate employers and employees to institute new and to perfect existing programs for providing safe and healthful working conditions (29 U.S.C. 651(b)(1);

Authorizing the Secretary of Labor to set mandatory occupational safety and health standards applicable to businesses affecting interstate commerce (29 U.S.C. 651 (b)(3);

Building upon advances already made through employer and employee initiative for providing safe and health working conditions (29 U.S.C. 651(b)(4));

Providing for the development and promulgation of occupational safety and health standards; (29 U.S.C. 651 (b)(9));

Providing for appropriate reporting procedures with respect to occupational safety and health which procedures will help achieve the objectives of this Act and accurately describe the nature of the occupational safety and health problem (29 U.S.C. 651(b)(12));

Exploring ways to discover latent diseases, establishing causal connections between diseases and work in environmental conditions * * * (29 U.S.C. 651 (b)(6);

Encouraging joint labor-management efforts to reduce injuries and disease arising out of employment (29 U.S.C. 651(b)(13)), and

Developing innovative methods, techniques, and approaches for dealing with occupational safety and health problems (29 U.S.C. 651(b)(5)).

Because this amendment to the ethylene oxide standard is reasonably related to these statutory goals, the Secretary finds that this action is necessary to carry out his responsibilities under the Act.

In addition, section 4(b)(2) of the Act provides that standards issued under OSHA apply to construction and maritime employment where the Secretary determines these standards to be more effective than existing standards which otherwise apply to that employment. (As set forth in 29 CFR 1910.19(h), the current EtO standard applies to construction and maritime employment, in addition to its coverage of general industry).

III. Justification for the Adoption of an Excursion Limit

Section 6(b)(5) of the OSH Act requires the Agency to set health standards which most adequately assure protection against significant risks of material health impairment, to the extent feasible. OSHA established its 8-hour TWA of 1 ppm for EtO (49 FR 25734) based upon considerations of feasibility, and determined that a significant cancer risk would persist at that level. As discussed above, the U.S. Court of Appeals has directed that OSHA reconsider further means of reducing that risk and "either adopt a STEL or explain why empirical or expert evidence on exposure patterns makes a STEL irrelevant to controlling long-term average exposures." 796 F.2d at 1507. The Agency believes that additional protection against continuing significant risk will be provided by a limitation on short-term exposures of 5 ppm over a 15 minute period. This additional protection has been determined to be feasible in the affected industries (see discussion under "Regulatory Flexibility and Impact Analysis"). The rulemaking record indicates that for industry sectors whose exposure patterns involve periods of intermittent, burst-type exposures to EtO, the excursion limit in certain instances will result in TWA exposures below those being experienced now.

In developing the final rule, OSHA has evaluated EtO exposure patterns to determine which employees are currently being exposed above the 5 ppm excursion limit. Of particular concern are those employees whose 8-hour TWA exposures are below the current 1 ppm permissible exposure limit but incorporate one or more short-term bursts which would exceed 5 ppm averaged over 15 minutes. It is these employees who would benefit the most from an excursion limit, because a reduction in short-term bursts would serve to reduce their total EtO dose, and thus would reduce their cancer risks. The Court in *Tyson* directed OSHA to issue an excursion limit if it would further reduce the significant risk attributable to total EtO dose; OSHA has determined that there are employees whose total EtO does would, in fact, be reduced by the imposition of an excursion limit, in accordance with the *Tyson* decision.

Based upon their site visits and a review of reports provided to the record by the National Institute for Occupational Safety and Health (Ex. 205–17), Meridian Research estimates that approximately six percent of all EtO-using facilities have at least one employee who is currently exposed below the 8-hour TWA of 1 ppm but above the proposed 5 ppm excursion limit. Therefore, OSHA has determined that the proposed excursion limit is, in fact, reasonably necessary to provide additional reduction of the significant risk which persists under the current standard. Further, OSHA has determined that such an excursion limit is generally feasible for the affected industry as a whole.

OSHA previously concluded that a short-term limit was not needed since "the compliance program designed to maintain exposure at or below the 1 ppm * * * limit * * *will also substantially reduce the magnitude of short-term exposures" (50 FR 64). The Agency also argued to the Court in *Public Citizen*, that "the record clearly indicates that for a number of reasons the benefits that would be achieved by a short-term limit will be almost entirely achieved by the PEL". Repondent's brief at 55. The Court disagreed with these assertions. In the opinion of the Court, the Agency's conclusions were not supportable since it had not been demonstrated that "in attempting to meet the 1 ppm PEL, employers will *in every case* reduce short-term exposures * * *" 796 F. 2nd at 1505.

The Court concluded that:

> The evidence in this record * * * does not demonstrate that employers will necessarily reduce short-term exposures below 10 ppm in order to meet the PEL. For example, an employer might measure a very low background level of EtO exposure, a level significantly below the 1 ppm PEL. Conceivably, such an employer could allow short-term exposures to exceed 10 ppm over a fifteen-minute period but still have cumulative exposure fall below the 1 ppm PEL, which is an eight-hour average. 796 F 2d at 1505.

The 8-hour TWA for EtO of 1 ppm was established because OSHA believed that this new exposure limit would substantially reduce the significant risk associated with EtO exposures at the previous TWA of 50 ppm, and that the 1 ppm level would be feasible for most operations in most workplaces that use EtO. However, as OSHA's quantitative risk assessment shows, an excess EtO-related cancer mortality risk of 12 to 23 deaths per 10,000 workers persists even at the 1 ppm 8-hour TWA level. Congress has mandated that reducing significant occupational health risks to the lowest feasible level clearly lies within OSHA's authority under the Act. The Court of Appeals remand on this issue in the EtO context further supports this position. OSHA believes that promulgation of a 5 ppm excursion limit for EtO is consonant with the intent of the Act. The available data on current exposure patterns and control measures indicate that compliance with a 5 ppm, 15-minute excursion limit will augment the employee protection provided by the 8-hour TWA in many cases. Because implementation of the 5 ppm excursion limit will further reduce the residual risk which persists at the current 1 ppm TWA, OSHA has determined that the Act compels its adoption, in accordance with the *Tyson* decision.

As noted in section V of this preamble below, OSHA estimates that approximately 6 percent of EtO facilities have at least one employee whose 8 hr. TWA exposures are below the current 1 ppm PEL, but who continue to be exposed to short-term levels exceeding 5 ppm as averaged over any 15 minute period during the workday. Based on OSHA's risk assessment, an employee

receiving one such 15-minute exposure during each workday, with no other EtO exposures, would have an 8-hour TWA exposure of 0.16 ppm, and a corresponding excess lifetime cancer risk of 2–4 per 10,000. OSHA believes that this excess risk is not insignificant. Further, since employees would virtually always be exposed to some background levels of EtO in the workplace in addition to their 15 minute excursion, their total dose would be higher than the short-term exposure alone would indiciate. The imposition of an excursion limit will, in accordance with the *Tyson* decision, further reduce the significant risk remaining under the current standard, although the precise degree of such reduction cannot be quantified. The record indicates that of the total EtO-exposed population of 67,728, approximately 560 are exposed below the 1 ppm TWA but above the 5 ppm 15-minute EL.

The written and oral comments of several expert witnesses that were made during OSHA's previous rulemaking on EtO suggest that the 8-hour TWA and 15-minute excursion limit may well work hand-in-hand to achieve effective control over exposures of this nature. [Exhibits (Ex.) 11–68, 11–83, 11–113, 11–142, 78, March 3 Transcript (Tr.) 216]. Based on the current record, OSHA believes that the excursion limit/TWA combination will act to minimize both the number and the magnitude of excursions occurring during the working day in many EtO workplaces, resulting in a reduction in the risk that persists with the TWA alone.

It is important to draw a distinction between reducing short term exposures to reach the mandatory 1 ppm TWA (the issue addressed by OSHA in its 1985 decision not to issue an EtO STEL), and reducing short term exposures to further reduce average exposures *below* that achieved by the TWA (the issue raised by the Court in the Tyson decision). The Court in Tyson directed OSHA to reconsider whether a separate limit on short term burst-type exposures could reduce total EtO dose below that achievable through the 8-hour TWA alone. If total dose could be further reduced in this manner, there would be a further reduction in significant risk. The Court concluded that the Act would compel the Agency to adopt a short-term limit under these conditions.

There is no question that many employers have sought to reduce total dose by reducing short-term exposures, as discussed earlier. This strategy is clearly an easy and cost-effective way to reduce average exposures. The report by Meridian Research Inc., as well as other evidence in the record (Exs. 11–68, 11–83, 11–142, 78, 112, TR. 216) support this strategy. OSHA invited comments and specific data on circumstances or conditions in which an excursion limit would fail to further reduce total dose and, therefore, the risk that would persist at the 1 ppm TWA. OSHA also asked if there were specific situations in which the incorporation of an excursion limit would result in work practices which would be counterproductive in reducing residual risk. These issues are discussed below.

The Office of Management and Budget (OMB) submitted comments [Ex. 205–27] to the docket on the Agency's proposed rule for a 15 ppm 5-minute excursion limit (EL) for EtO. OMB acknowledged that the 5 ppm short-term limit "is likely to be technically feasible" [Ex. 205–27, p. 2], but raised questions about several aspects of the proposed rule. Many of the issues addressed by OMB are closely related and pertain to OSHA's finding that the controls necessary to reach the 8-hour time-weighted permissible exposure limit are the same as those necessary to comply with the 15-minute excursion limit (53 FR 1724 et seq.).

Specifically, OMB expressed the following views with regard to the promulgation of an EL for EtO:

1. Because compliance with an EL requires different controls than compliance with a PEL, an EL will increase the costs of compliance in certain sectors;

2. An EL will not directly affect long-term exposures and may actually increase them;

3. Respirators may provide equal or substantially greater protection than engineering controls for short-term exposures;

4. The proposed monitoring requirements are unnecessarily burdensome.

Each of these points is addressed separately below.

Feasibility and Costs

OMB is of the opinion that the controls necessary to achieve compliance with a short-term limit are different from those required to comply with the 8-hour TWA PEL of 1 ppm. As stated in the proposed preamble, OSHA concluded that the controls needed to comply with the 1 ppm limit would simultaneously reduce employees' exposures to or below the 5 ppm 15-minute excursion limit. OSHA based its conclusion on the written and oral comments of several expert witnesses during OSHA's previous EtO rulemaking, who reported that the 8-hour TWA and excursion limit would work hand-in-hand to achieve control over episodic exposures to EtO [Exs. 11–68, 11–83, 11–113, 11–142, Tr. 216]. In addition, OSHA relied on the findings of Meridian Research, Inc. [Ex. 204], a contractor to OSHA, which showed that, almost without exception, where employers had achieved compliance with the final rule's 1 ppm 8-hour TWA PEL, controlling short-term employee exposures to either 10 ppm or 5 ppm would be neither difficult nor expensive. Moreover, Meridian found that the controls to achieve both types of limits (i.e., long-term TWA PEL and short-term EL) would be the same.

It is OMB's contention that, at least for some employers, the controls chosen to meet the PEL and the EL may be different. According to OMB:

> It is incorrect to conclude from the Meridian report that reducing short-term exposures is *necessary* to comply with the PEL. Other firms have chosen to reach the PEL more cost-effectively by reducing background ambient levels (through general ventilation, for example) instead of short-term exposures (through conveyor systems, for example). For these firms, a STEL will require a different mix of controls that is more costly [Ex. 205–27, p 4].

OMB thus believes that, at least for a few employers, promulgation of a short-term limit will impose additional compliance costs and require different controls from those needed to comply with the 8-hour TWA. OMB's belief that some employers will be forced by promulgation of a short-term limit to implement different and costly engineering controls derives from the Budget Office's categorization of engineering controls into two classes: Longterm controls and short-term controls. OMB classifies isolation of the sterilization areas and general dilution ventilation in the first group, and categorizes as "short-term" controls such technologies as design of the sterilizer, use of a conveyor handling system, use of thermocouples, and use of a microprocessor-controlled sterilization process [Ex. 205–27, p. 4]. Having classified controls as short-term and long-term, OMB then explains that none of the small contract sterilizers visited by Meridian Research [Ex. 204] had implemented "short term" controls and would be forced to do so at substantial cost if the Agency promulgates a short-term limit.

OSHA's knowledge of industrial hygiene, which derives from experience with the controls needed to comply with hundreds of hazardous substances that

have exposure limits ranging from instantaneous peaks to 8-hour TWAs, suggests that the line drawn by OMB between long-term and short-term controls is not, in fact, reflected in the compliance strategies followed by employers in real-world workplaces. The traditional hierarchy of controls, which has been the underlying tenet of industrial hygiene since the 1950s, emphasizes that certain general types of control, i.e., engineering controls, are to be preferred over others, i.e., personal protective equipment, but nowhere makes a distinction between long-term and short-term controls. Within the category of engineering controls, certain control methods, such as those that eliminate or substantially reduce emissions at their source, are ordinarily preferred and considered to be more effective than other controls, such as general dilution ventilation, which simply dilute rather than eliminate the amount of the hazardous substance in the air.

OSHA believes that, when confronted with hazardous exposures in their workplaces, the overwhelming majority of employers will analyze their workplaces to identify and locate specific sources of emission and that they will then design an integrated control strategy to reduce these emissions. Such an integrated control approach in a medical products sterilization facility would generally include, for example, local exhaust ventilation; general dilution ventilation; the use of T-valves, hoods, and/or isolation to control exposures from EtO canisters; and observance of the work practice of cracking the sterilizer door for several minutes before unloading. In the facilities in all sectors that were in compliance with the PEL, Meridian found that employers were using a combination of the following controls: General dilution ventilation, local exhaust ventilation, isolation, and work practices [Ex. 204].

Further, no site visited by Meridian had attempted only to implement a general dilution ventilation system to achieve the 8-hour TWA PEL. In every case where employers had implemented engineering controls, they were using an integrated approach that focused on removing EtO at the source of emission and were supplementing these controls with general dilution ventilation.

OSHA finds that EtO-using or producing facilities will (1) be in compliance with both the 1 ppm PEL and the 5 ppm EL at the present time; (2) be out of compliance with both the PEL and the EL at the present time; or (3) in fewer than 6 percent of all cases, be in compliance with the 8-hour TWA and be exceeding the 15-minute EL. In the first instance, employers will already be in full compliance, and will incur no costs to comply with the EL. Employers in the second category will, OSHA believes, implement an integrated control strategy to address their EtO exposure problems. This control strategy will undoubtedly adopt the surest, most direct, and most cost-effective control approach: elimination of emissions at their source. Employers in this group may also choose to supplement these point source controls with general dilution ventilation.

Workplaces falling into the third category, i.e., that have employee exposures at or below the 8-hour TWA but short-term exposures above the 5 ppm level, will need to analyze their situation carefully to identify the source of their exposure problem. This emission source inventory and industrial hygiene task analysis will help employers to locate the problem and to address it most cost-effectively. The following theoretical example illustrates this approach to the management of workplace exposures. A medical product company's sterilizer operator has a short-term exposure above 5 ppm (15 minutes), although her 8-hour TWA exposure is within the full-shift limit. A source inventory and task analysis would help to determine whether this operator's work practices were poor (e.g., she was not cracking the door before removing freshly sterilized product or was bending too closely over the product to remove biological indicators), whether inadequate isolation of offgassing product was responsible for the elevated exposure, or whether a particular product mix was the source of the problem. The control strategy adopted by the employer to address each of these problems would be quite different, and could range from re-training of the sterilizer operator to walling off a product quarantine area to scheduling the most difficult loads for times when longer aeration periods are available. Each of these hypothetical control solutions would involve minimal or no additional costs.

Thus, OSHA reaffirms its findings that achieving the 8-hour TWA PEL and the short-term limit are linked in all but a small percentage of cases, and that compliance with one limit will simultaneously achieve compliance with the other in the great majority of workplaces. The Agency also finds that effective industrial hygiene control of both short-term and long-term exposures requires the control of point source emissions at their point of origin, and that controlling these emissions sources has a direct impact on the total dose or overall exposures of affected employees. Because control of the workplace depends on control of emissions at their source, and because this control approach is essential to achieve either EtO exposure limit, OSHA concludes that the control involved in complying with either limit are the same and will impose no additional EL-related costs on employers. Thus, with the exception of the small minority firms discussed above, no additional costs will be incurred to achieve compliance with the final rule's excursion limit.

Effect on Long-Term Exposures

OMB's comment states that, before OSHA can promulgate a short-term limit for EtO, the Agency must "establish that adoption of a STEL is 'relevant' to average long-term exposures" [Ex. 205–27, p. 5]. According to OMB, "a PEL controls total dose, which is the only relevant exposure measure when timing and duration [i.e., a dose-rate effect] do not affect the risk" [Ex. 205–27, p. 6]. The argument put forward by OMB is that an 8-hour limit "directly" reduces risk, while a STEL is only a "means * * * to reach the [desired] end (changing the total dose)" [Ex. 205–27, p. 6]. OMB appears to be saying that the imposition of an EL will serve only to redistribute the *pattern* by which the total dose is administered and will not actually reduce total dose.

OSHA does not agree with this view of the function of a short-term exposure limit. The record contains evidence (Company D, Ex. 204; Hospital E, NIOSH 1986, Ex. 205–17) that as many as 6 percent of affected facilities are currently in compliance with the final rule's 1 ppm 8-hour TWA but are achieving a 5 ppm 15-minute excursion limit. In these two real-world instances, controlling the excursions of these employees will reduce their total EtO dose to a level below the exposures they are currently experiencing.

To illustrate the interaction between the 8-hour TWA and the EL, the preamble to the proposal described a hypothetical example where an employee is exposed to 24 ppm for a single 15-minute interval and to no other exposure during the day. In this example, the employee's 8-hour TWA exposure would be 0.75 ppm. After controlling the short-term peak to 5 ppm, this employee's 8-hour TWA would fall to 0.16 ppm. In these and other instances cited in the record, OSHA finds that control of short-term exposures will have a direct impact on employees' long-term exposures (total dose) of EtO.

To illustrate its contention that promulgation of an EL will not affect (and may even increase rather than decrease) long-term exposures, OMB described the following hypothetical situation: An employer, finding that general dilution ventilation has reduced his employees' total EtO dose to levels below the action level of 0.5 ppm, chooses to purchase controls to achieve compliance with the newly promulgated excursion limit. To purchase these controls, he uses the money he saved as a result of cutting back on the general dilution ventilation that achieved the reduction in total dose in the first place. OSHA finds this scenario implausible, for several reasons.

First, the Agency believes that there are no (or very few) workplaces where the 8-hour TWA PEL is being achieved solely with general dilution ventilation. Such an approach would involve uncontrolled emission sources emitting EtO into the atmosphere continuously (i.e., from a slowly leaking canister) or intermittently (i.e., whenever a sterilizer or canister was opened) while the employer attempted to control the resulting ambient EtO concentrations by exchanging the air in the workplace at a high rate. In such an environment, ambient concentrations would be likely to be very high and to increase as the work week progressed. Thus an EtO-using workplace controlled only by means of general dilution ventilation would have ambient levels that are increased, while one using point source controls would be characterized by decreased levels.

Second, OSHA believes that employers will select that mix of controls that will most efficiently reduce exposures to the levels necessary to comply with both limits (the PEL and the EL) most cost-effectively. This mix will almost certainly consist of general dilution ventilation and point source controls. Even if it is true, as OMB states, that requiring employers to implement effective point source controls will divert resources away from maintaining general dilution ventilation systems, OMB is not accurate when it states that such a reduction in dilution ventilation is likley to increase the ambient EtO level. The ambient concentation would not increase in such a case because the operation of the point source controls will eliminate (or nearly eliminate) any contribution to ambient EtO levels generated by these emission sources. Thus, the ambient EtO level would decrease after point source controls were implemented.

Third, OSHA finds the scenario presented by OMB highly improbable because the likelihood is vanishingly small that EtO-using facilities exist that are (1) maintaining their employees' 8-hour TWA exposures below the action level solely by means of general dilution ventilation, and (2) have short-term exposures above 5 ppm. As discussed above, the Agency is aware only of a small percentage of facilities where the 1 ppm TWA is being met but the 5 ppm EL is being exceeded, and OSHA is aware of no instances where the 8-hour PEL has been achieved by means of general dilution ventilation alone.

Methods of Compliance

OMB [Ex. 205–27, pp. 9–11] commented at length on OSHA's proposed requirement that employers must implement feasible engineering and work practice controls to achieve the 5 ppm excursion limit. The comment addresses two main points. First, OMB states that many of the criticisms against primary reliance on respirators (i.e., that they are uncomfortable and cause irritation) are less relevant when respirators are used for short periods of time. OMB's second point is that, since the least protective respirator permitted under the EtO standard reduces exposure by a factor of 50, respirators may be more effective than engineering and work practice controls in reducing short-term exposure. OMB states that OSHA should permit employers to rely on respiratory protection to comply with the 5 ppm excursion limit as long as the employer is complying with the 8-hour TWA by means of feasible engineering and work practice controls.

Because of the difficulties associated with relying on respiratory protection as a first line of defense against exposure to toxic substances, OSHA has traditionally required that employers use feasible engineering controls and work practices to comply with the Agency's exposure limits. This policy has been applied consistently in all of OSHA's previous health rulemakings. Although it may be the case that, as OMB argues, discomfort and facial irritation are less of a problem during short periods of respirator use, these problems are not entirely eliminated with short-term use and the safety hazards associated with respirator use, such as reduced vision and communication, are present whenever respirators are worn.

Furthermore, for respirators to be effective in reducing exposures, employers must implement a comprehensive respirator program, including adequate fit-gesting, training of employees, and proper respirator maintenance. If these programs are not in place, respirators will not be nearly as effective as their protection factors would suggest. Moreover, as OMB itself acknowledges [Ex. 205–27, p. 10], adequate respiratory protection programs were not in place at some of the facilities visited by Meridian [Ex. 204]. Thus, OSHA is not persuaded that employees will receive equal or greater protection against high short-term exposures to EtO if they use respirators during these excursions. Accordingly, the final rule requires employers to achieve compliance with the excursion limit by using feasible engineering and work practice controls. (OSHA notes, however, that the issue of engineering controls is moot for all but the 6 percent of facilities in which the 8-hour TWA is being achieved but the EL is being exceeded.)

The issue of whether to apply different methods of compliance principles to short-term or excursion limits was raised in OSHA's recent rulemakings for benzene (52 FR 34460) and formaldehyde (52 FR 46168). In both cases, the rulemaking record did not offer specific comments on this issue, and OSHA determined that applying the traditional methods of compliance requirements to the short-term limits for benzene and formaldehyde was a protective and cost-effective approach. This issue is expected to arise in the proceeding on OSHA's methods of compliance rulemaking (see the 1987 Regulatory Program of the United States Government). As is the case with both the benzene and formaldehyde standards, if appropriate evidence is submitted in the methods of compliance rulemaking, OSHA will consider making appropriate changes to the EtO standard.

Proposed Monitoring Requirements

OMB [Ex. 205–27] also commented on OSHA's proposed amendments to the final rule's monitoring requirements, stating that they "do not appear to be the least burdensome necessary to identify accurately those workers exposed above the * * * [excursion limit]" [Ex. 205–27, p. 12]. Specifically, OMB compared the proposed short-term monitoring requirements for EtO with the short-term monitoring requirements in OSHA's final benzene standard. OMB points out that, instead of requiring the employer to conduct representative sampling on each shift, for each job, and for each work area, the final benzene standard requires short-term monitoring "only where there is reason to believe exposures are high" [Ex. 205–27, p. 12], and also permits employers to conduct sampling on the one shift where exposures are highest. OMB also took

issue with OSHA's proposed requirement that the employer repeat short-term EtO monitoring every 6 months as long as short-term exposures exceed the excursion limit; the Budget Office argued that OSHA's benzene standard requires periodic short-term monitoring only as necessary to evaluate employee exposures. OMB believes that OSHA's short-term monitoring requirements for benzene are more flexible and less burdensome than the proposed short-term monitoring requirements for EtO, and states that OSHA should "completely justify" any short-term monitoring requirement for EtO that goes beyond the same requirements in the Agency's recent benzene standard.

In formulating the proposed short-term monitoring requirements for EtO, OSHA's intent was to ensure that employers monitor the short-term exposures of those employees who are performing tasks that may result in high short-term exposures. OSHA did not intend that employers measure the short-term exposures of employees whose work activities were not associated with a potential for elevated short-term exposures to EtO. Thus, OSHA expects employers to monitor short-term exposures of employees engaged in activities such as sterilizer loading and unloading, changing EtO tanks on sterilizer equipment, taking process quality control samples, or disconnecting a loading arm from a railcar; these activities carry a potential for elevated short-term exposures to EtO. On the other hand, OSHA would not expect an employer to measure the short-term exposures of employees who, for example, work in an enclosed control room where there is no potential for elevated short-term exposures to EtO. OSHA's intent is reflected in the language contained in proposed paragraph (d)(1)(ii), which states that the employer shall collect samples "representing 15-minute exposures *associated with operations that are most likely to produce exposures above the excursion limit* for each shift for each job classification in each work area" (emphasis added). Thus, OSHA believes that the final rule's short-term monitoring requirements for EtO are consistent with those of OSHA's benzene standard: both standards require short-term monitoring only where there is a potential for elevated short-term exposure.

OMB [Ex. 205–27, p. 12] also pointed out that the proposed monitoring requirements for EtO would require that employers conduct short-term monitoring on each shift, in contrast to OSHA's benzene standard, which permits the employer to conduct short-term monitoring only on the shift where the highest exposures occur. First, the requirement in the benzene standard referred to by OMB does not apply in the case of initial monitoring, where the benzene standard requires employers initially to monitor on every shift. Second, once the employer has made these initial determinations, the employer may restrict periodic monitoring to include one shift only if the employer can demonstrate that employee exposures on the remaining shifts are similar or lower. Thus, the benzene standard permits employers to conduct monitoring on one shift only after the employer has adequately determined that exposure measurements taken during one shift are representative of employee exposures that occur during other shifts. Since benzene is most frequently encountered in closed, controlled chemical process or storage systems (i.e., petroleum refining, petrochemical production, bulk motor fuel storage, and fuel transport), OSHA believes that an employer in a benzene-using facility can have some degree of confidence that exposures encountered during one shift are representative of employee exposures during other shifts.

However, in the case of EtO, OSHA believes that a number of factors may cause employee exposures during one shift to differ from those on other shifts, particularly during sterilization operations. For example, many companies sterilize a variety of different products that offgas EtO at different rates; this can lead to very different short-term exposures among employees working on different shifts. Additionally, short-term exposures to EtO are highly dependent on work practices, which may vary markedly among different employees. The importance of collecting short-term samples of EtO on each shift was demonstrated during a visit to a medical products sterilizing facility conducted by Meridian Research, Inc. [Ex. 204]. At this facility (Company D), the daytime sterilizer operator had short-term exposures below the 5 ppm excursion limit, but the night shift operator had two short-term exposure measurements exceeding 5 ppm. The difference in exposure measurements obtained during the two shifts was attributed to the different periods of time that the product was allowed to offgas in the sterilizer after the end of the sterilizer cycle. Clearly, in this particular case, the daytime operator's exposure would not have been representative of the short-term exposure of the nightshift operator. Therefore, OSHA concludes that the nature of the particular operations in which EtO is used makes it necessary for employers to characterize the short-term exposures of employees on each of their shifts.

OMB's final point concerns OSHA's proposed monitoring frequency requirements for short-term exposures to EtO. OMB stated that—

> The more flexible benzene approach [which requires that employers monitor short-term exposures "as necessary] seems particularly sensible with regard to a STEL because the separate annual monitoring required for the action level and twice-a-year monitoring required for the PEL would be useful in determining when exposures had changed sufficiently to trigger additional STEL monitoring * * *. Since the agency already requires periodic monitoring for total dose, periodic monitoring for the STEL in the absence of changes in total dose would be of little benefit. [Ex. 205–27, pp. 12–13]

OSHA believes that the situation with regard to EtO is unique in that, for many operations such as EtO sterilization, employee exposures are characterized predominently by periodic peak exposures to relatively high levels of EtO. Because employees are exposed to EtO in this manner, OSHA believes that it is particularly important that the employer continue monitoring short-term exposures when prior monitoring results indicate that employee exposures exceed the excursion limit. It is only by periodic monitoring of short-term exposures that employers can fully understand how their operations are contributing to such exposures, and what steps may be effective in reducing short-term exposures. Periodic monitoring of short-term exposures will also direct the employee's attention to those work operations that present a potential for high short-term exposure to EtO, and will reinforce the need to use good work practices during those operations. Thus, OSHA does not agree that monitoring short-term exposures to EtO provides no benefit, even if TWA exposures remain fairly constant. In addition, OSHA does not believe that the proposed periodic short-term monitoring requirements are unduly burdensome, since OSHA is only requiring such monitoring if short-term exposures exceed the excursion limit; that is, unlike the monitoring requirements for the 1 ppm TWA PEL, there is no corresponding action level below the excursion limit that would trigger periodic monitoring.

IV. Regulatory Flexibility and Impact Analysis

Introduction

Executive Order 12291 (46 FR 13197, February 19, 1981) requires that a regulatory analysis be conducted for any rule having major economic consequences on the national economy, individual industries, geographical regions, or levels of government. The Regulatory Flexibility Act (5 U.S.C. 601 *et seq.*) similarly requires OSHA to consider the impact of the proposed regulation on small entities.

The Secretary has determined that this action would not be "major" as defined by Section 1(b) of Executive Order 12291. The Secretary also certifies that this action would not have a significant impact on a substantial number of small entities as defined by the Regulatory Flexibility Act. This determination is based upon cost and feasibility data provided to OSHA in a report prepared by Meridian Research, Inc. (Ex. 204, *Assessment of Short-Term Exposures to Ethylene Oxide*).

On March 31, 1983, the Office of Management and Budget (OMB) published a new 5 CFR Part 1320, implementing the information collection provisions of the Paperwork Reduction Act of 1980, 44 U.S.C. 3501 *et seq.* (48 FR 13666). Part 1320, which became effective on April 30, 1983, sets forth procedures for agencies to follow in obtaining OMB clearance for collection of information requirements in proposed and final rules. In particular § 1320.13 requires agencies to submit information requirements contained in proposed rules to OMB not later than the date of publication of the proposal in the **Federal Register**. It also requires agencies to include a statement in the notice of proposed rulemaking, indicating that such information requirements have been submitted to OMB for review under section 3504(h) of the Paperwork Reduction Act.

In accordance with the above mentioned provisions of both the Paperwork Reduction Act and the regulations issued pursuant thereto, OSHA certifies that it has submitted the information collection requirements contained in its rule on occupational exposure to ethylene oxide to OMB for review under section 3504(h) of that Act.

Summary of Exposure, Technological Feasibility, and Cost Data

In repsonse to the Court's remand discussed above, OSHA has evaluated short-term employee exposures to EtO in the sectors which would principally be affected by promulgation of an excursion limit, assessed the technological feasibility of achieving compliance with the excursion limit alternatives under consideration, and developed cost-of-compliance data for firms in the affected sectors. In particular, OSHA has made a determination as to the portion of an employee's full-shift exposure that is accounted for by short-term peaks.

For this effort, OSHA contracted with Meridian Research, Inc., to gather the information specified above and to conduct a total of nine site visits to selected facilities in four industry sectors: EtO producers, EtO ethoxylators (i.e., facilities using EtO as a chemical feedstock), hospitals, and firms that use EtO to sterilize medical and other products and devices. Meridian was unable to arrange a site visit to a facility in the fifth potentially affected sector, spice manufacturing, because no spice manufacturing frim was willing to permit a site visit. Meridian's final report appears in the docket as Exhibit 204. For the purposes of this analysis, OSHA considered two regulatory alternatives: A 10 ppm excursion limit (15 minutes) and a 5 ppm excursion limit (15 minutes). OSHA's principal findings are discussed below.

The five sectors listed above were identified for further study by OSHA based on the information available in the rulemaking record (see the Regulatory Impact Assessment for the final rule for ethylene oxide, Ex. 164, and the report entitled *Economic and Environmental Impact Study of Ethylene Oxide*, written by JRB Associates, 1984, Ex. 6–22). In two of these sectors—chemical production and ethoxylation—a total of approximately 50 U.S. firms produce or use EtO as a chemical feedstock in closed systems in an outdoor environment. In the three other sectors—hospitals, spice manufacturing, and medical products sterilizing—EtO is used as a sterilant gas to sterilize medical equipment and devices, paper and other products, and spices. OSHA estimated (49 FR 25767, June 22, 1984) that there were as many as 6,300 hospitals, 125 medical products sterilizers, and fewer than 30 spice manufacturers in the United States. Medical and other product sterilization firms can be divided into two groups of companies: Those that have a sterilization department within a larger facility that produces the medical devices or other products to be sterilized, and small firms that provide sterilization services exclusively, generally on a contract basis. At the time of the 1984 rulemaking, OSHA estimated that a total of 71,196 directly exposed employees and 69,175 incidentally exposed employees were exposed to EtO in these five sectors (49 FR 25767, June 22, 1984). Meridian has recently estimated the total number of exposed workers to be 67,728 as of 1988. (See Table A taken from Ex. 223.)

TABLE A.—EXPOSED EMPLOYEES BY INDUSTRY SECTOR

Number of sector	Exposed employees [1]
EtO Producers	[2] 1,046
Ethoxylators	[2] 1,436
Medical Products Sterilizers	[3] 1,814
EtO-Sterilizer-Using Hospitals	[4] 63,000
Spice Manufacturers	[5] 432
Total	67,728

Source: Meridian Research, 1988.

[1] Exposed workers are those who do at least some work in the vicinity of EtO units.

[2] As reported in Heiden Associates, Inc., *An Estimate of Industry Costs for Compliance with Two Ethylene Oxide Workplace STEL Scenarios: Ethylene Oxide Production and Ethoxylation Plants*, 1988, p. ii.

[3] As reported in Heiden Associates, Inc., *A Medical Products Industry Profile for Evaluating Compliance with Two Ethylene Oxide Workplace STEL Scenarios:* 10 ppm STEL and 5 ppm STEL, 1988, p. ii.

[4] Calculated by multiplying the estimated number of facilities (see footnote k of Exhibit 1) (4,500) by the number of exposed employees per facility (14), as reported in JRB Associates, *Economic and Environmental Impact Study of Ethylene Oxide*, 1983, pp. 3–5.

[5] JRB Associates, *Economic and Environmental Impact Study of Ethylene Oxide*, 1983, pp. 3–11

Short-term Exposure Data

On the site visits conducted in connection with this analysis, Meridian took 8-hour TWA personal samples on all potentially exposed employees at eight of the sites visited. Using passive dosimeters, these long-term breathing zone samples were taken over the full shift of the employees sampled. In addition, whenever these employees initiated an activity having the potential for a short-term peak exposure, Meridian's Certified Industrial Hygienist took short-term (15-minute) breathing zone samples using hydrogen-bromine-treated charcoal tubes, as specified by OSHA's Method 50. Short-term samples were taken during all activities during the working day that were associated with episodic exposures. The specific activities characterized by such short-term peaks varied according to sector. For example, in production and ethoxylation facilities, peaks were associated with activities such as quality control sampling and railcar unloading, while high, short-duration exposures occurred in the sectors that use EtO as a sterilant during such activities as sterilizer loading and unloading and removal of biological indicators from freshly sterilized goods.

OSHA's employee sampling results showed that implementation of engineering and work practice controls have reduced employee exposure to below that anticipated by OSHA when promulgating the final standard in June 1984. In addition, almost without exception, where employers had achieved compliance with the final rule's 1 ppm 8-hour permissible exposure limit (PEL), controlling short-term employee exposures to either 10 ppm or 5 ppm would neither be difficult nor expensive. OSHA therefore believes that a 5 ppm excursion limit is feasible.

The results of OSHA's data gathering on short-term exposures were as follows: In the EtO-producing sector, 8-hour employee exposures ranged from 0.21 to 0.78 (TWA), while 15-minute short-term exposures did not exceed 2.2 ppm. (In this sector, no samples were taken by Meridian because of inclement weather during the site visit; these results were given to Meridian by the EtO-producing company itself.) In the ethoxylator sector, 8-hour TWAs were non-dectectable, while 15-minute short-term exposures ranged from non-detectable to 1.07 ppm.

In the sterilant-using sectors, short-term exposures tend to be higher because of the episodic exposure pattern characteristic of these sectors. Samples taken by Meridian at three hospitals showed that the 8-hour TWA exposures of sterilizer operators in these facilities ranged from 0.14 to 0.34 ppm, while their 15-minute short-term exposures never exceeded 0.95 ppm. The hospitals selected for this analysis included a large, private-sector facility, a small rural hospital, and a large public-sector institution.

EtO exposures in the medical products sterilization sector appear to be strikingly dependent on the size of the facility in question. In large sterilization facilities owned by firms that manufacture medical products and sterilize them before shipping them off site, employee exposures in the facilities studied by Meridian have been reduced to levels well below the 1 ppm TWA, and short-term exposures are correspondingly low. The full-shift samples taken at two large facilities in this sector ranged from 0.08 to 0.36 ppm, and the 15-minute short-term exposures at these plants ranged from 0.24 to 4.1 ppm. At two small sterilization facilities in this sector, however, full-shift exposure levels were measured that were considerably above the 1 ppm PEL promulgated in the final rule. At one of these small facilities, the sterilizer operator had an 8-hour TWA of 3.97 ppm, and at the other small contract-sterilization plant, the sterilizer's full-shift exposure was 2.84 ppm, while that of the laboratory technician was 2.27 ppm. The short-term exposures of these employees were correspondingly high. At the first small facility, the short-term exposures (approximately 15 minutes) of the sterilizer operator ranged from 2.15 to 7.89 ppm, while the sterilizer operator's short-term exposures at the second facility ranged as high as 32.2 ppm (15 minutes) and those of the laboratory technician were as high as 7.21 ppm.

As stated earlier, no spice manufacturing firm was willing to permit Meridian to visit a spice facility; consequently, OSHA was unable to obtain any current data on short-term exposures of employees in this sector. However, information obtained during the rulemaking for the final EtO standard shows that the sterilization technology used in the spice manufacturing industry is similar to the technologies used in the sterilization of medical products (JRB Associates, Ex. 6–22). Short-term exposures in the spice sterilization operation may occur during the unloading of sterilized spices from the sterilizer, the handling of newly sterilized product, and the changing of EtO cylinders. OSHA has no data to suggest that short-term exposures in the spice manufacturing industry are substantially different from those in other EtO sterilant-using industry sectors. Therefore, by analogy to the exposure data obtained from medical product sterilizer facilities, OSHA believes that it will be possible to control the short-term exposures of employees in the spice manufacturing sector at or below 5 ppm.

The pattern that emerged at all the sites visited was thus consistent across sectors: Where employers have achieved compliance with the 1 ppm PEL, their facilities would already be in compliance with either a 5- or a 10-ppm short-term limit or could feasibly achieve these levels with minor changes in work practices. There was only a single exception to this finding among all sites visited by Meridian: At one facility, the evening-shift sterilizer operator's short-term (approximately 15 minutes) exposures were 3.56, 10.97, 8.49, and 0.39 ppm; no full-shift measurement was taken on this operator, and thus it is possible that his 8-hour TWA exceeded 1 ppm. However, because 87 percent of the 8-hour TWA exposure level of the day-shift operator at the same facility was accounted for by his four short-term exposures, OSHA considers it unlikely that the evening shift operator's 8-hour TWA actually exceeded 1 ppm. (As described below, OSHA believes that this employee's short-term exposure could be reduced to 5 ppm by a modification in work practices.) OSHA therefore believes that firms that have achieved compliance with the 1 ppm TWA promulgated in the final rule in 1984 should be able to lower employee exposures to a 10- or 5-ppm short-term level, at minimal cost.

TABLE B.—ESTIMATED COSTS FOR INITIAL ETO EXCURSION LIMIT MONITORING AND RECORDKEEPING IN THE AFFECTED INDUSTRY SECTORS

Number of Hours Needed To Conduct Sampling [1]	Costs For Conduction	Number of Short-Term Samples To Be Air Sampling [2]	Sample Collected Per Facility [1]	Number of Hours Needed for Analysis Costs [3]	Recordkeeping [4]	Cost for Recordkeeping [4]	Cost Per Facility [5]	Total Number of Burden-Hours for Number of Facilities in Sector	Initial Monitoring and Recordkeeping [6]	Total Estimated Cost for Initial Monitoring and Recordkeeping [7]
EtO Producers	8	$320	6	$210	1	$10.75	$540.75	[8]13	117	$7,030
Exthoxylators	8	320	6	210	1	10.75	540.75	[9]38	342	20,549
Medical Products Sterilizers	8	320	6	210	1	10.75	540.75	[10]95	855	51,371
EtO Sterilizer-using Hospitals	8	320	6	210	1	10.75	540.75	[11]4,500	40,500	2,433,375
Spice Manufacturers	8	320	6	210	1	10.75	$540.75	[12]27	243	14,600
TOTAL								4,673	42,057	$2,526,925

SOURCE: Meridian Research, 1988.

[1] Meridian estimate, based on 1986-87 site visits.

[2] The cost for conducting air monitoring is based on hiring an industrial hygiene consultant at a cost of $40 per hour, or $320 per day. The cost of an industrial hygiene consultant includes the costs of pumps, sampling tubes, and packaging and mailing of samples for analysis. (SKC, Inc. sells 50 tubes suitable for measuring EtO excursions using OSHA Method 50 for $79, according to their 1988 comprehensive catalog and guide (p.6)).

[3] The sample analysis cost is based on the number of short-term samples to be collected multiplied by an analytical cost of $35 per sample (American Medical Laboratory Inc., Fairfax, Virginia, 1987 estimate). Two additional labs contacted in 1988 quote analysis costs of $28 and $45 per sample, respectively: thus $35 appears to be a reasonable estimate.

[4] Recordkeeping costs are estimated by multiplying the number of hours needed by the average hourly wage of clerical personnel in 1988. This wage estimate ($10.75 hour) was calculated by compounding the 1986 average hourly wage of $9.75 for secretaries (source: March 9, 1988 telephone conversation between R. Gering, Meridian Research, Inc., and P. Doyle, Bureau of Labor Statistics, U.S. Department of Labor) by five percent annually over two years.

[5] Cost per facility is estimated as the sum of costs for air sampling, sample analysis, and recordkeeping.

[6] The estimated total number of burden-hours is calculated by multiplying the number of facilities in each industry sector by the sum of the number of hours needed to conduct sampling and the number of hours needed for recordkeeping.

[7] The total estimated cost for initial monitoring and recordkeeping was calculated by multiplying the number of facilities in each industry sector by the sum of the costs of conducting air sampling, the cost of sample analysis, and the cost of recordkeeping.

[8] Sources: 49 FR 25767, June 22, 1984; and Heiden Associates, Inc., *An Estimate of Industry Costs for Compliance with Two Ethylene Oxide Workplace STEL Scenarios: Ethylene Oxide Production and Ethoxylation Plants* (Final Report), p. ii, prepared for the Ethylene Oxide Industry Council of the Chemical Manufacturers Association, February 5, 1988.

[9] Source: Heiden Associates, Inc., *An Estimate of Industry Costs for Compliance with Two Ethylene Oxide Workplace STEL Scenarios: Ethylene Oxide Production and Ethoxylation Plants* (Final Report), p. ii, prepared for the Ethylene Oxide Industry Council of the Chemical Manufacturers Association, February 5, 1988.

[10] Source: Estimate made by Heiden Associates, Inc., in *A Medical Products Industry Profile for Evaluating Compliance with Two Ethylene Oxide Workplace STEL Scenarios: 10 ppm STEL and 5 ppm STEL* (Final Report), p. i, prepared for the health industry Manufacturers *Association*, February 22, 1988.

[11] Based on the following: Estimate of 3,600 EtO using facilities (out of 6,300 hospitals) may be Charles R. Manning of Assay Technology, Inc., in "Analytical Chemistry Testimony Regarding Rulemaking on Employee Exposure to Ethylene Oxide," p. 2, presented to U.S. Department of Labor, Occupational Safety and Health Administration, February 20, 1988; and estimate of 4,500 facilities made by Charles O. Hancock, Manager, Process and Power Equipment RD&E, of MDT Corporation, in p. 1 of letter dated February 19, 1988 to Docket Officer, Docket No. H-200, U.S. Department of Labor, Occupational Safety and Health Administration. The estimate of 4,500 facilities was used because it represents the upper bound.

[12] Based on the number of facilties reported in 40 FR 25767, June 22, 1984.

Representativeness and Reliability of the Meridian and Heiden Approaches

In its Proposal (53 FR 1724), OSHA stated Meridian's belief that the sites visited represented the "better" firms in their respective sectors (*i.e.* firms that have active safety and health programs and/or have expended considerable time and effort to attempt to achieve the 1 ppm PEL). The Health Industry Manufacturers Association (HIMA) has contended that Meridian "went into the tail of the curve looking for worst case examples in the noncompliant tail of the curve" (Tr. p. 82). However, in response to questioning at the hearing, Meridian indicated that it chose, for its observations of procedures at small medical product sterilizers two companies which had indicated in earlier rule making that they would have great difficulty in meeting a PEL of 1 ppm or any STEL (Tr. p. 55). This was done so OSHA would not overlook the possible problems of HIMA members in meeting the standard. It is the opinion of OSHA that Meridian's selections of "better" and "worst case" sites added to the broad representativeness of its observations.

HIMA also maintained that Meridian did not visit any companies with large sterilizing facilities (Tr. p. 83). HIMA and the Ethylene Oxide Industry Council (EOIC) criticized the small number of facilities in Meridian's study, compared to the large number of facilities which submitted information sheets to Heiden Associates for the HIMA and EOIC surveys. OSHA believes that the independent review and analysis of workplace conditions performed by Meridian's professional industrial hygiene team provided the Agency with the best available information on the impacts of implementing the excursions limit in actual workplace settings.

Heiden's studies were commissioned directly by the industry groups and were surveys developed with the assistance of members of industry. The "Heiden A" report stated that incremental costs of "STEL compliance measures are 'hypothetical' in the sense that survey-participating firms may not have had experience with measuring short-term exposure levels and/or administering STEL's for ethylene oxide as past or current voluntary company workplace policy of the absence of regulations" (Ex. 205-6, App. A, p. 4).

Although "Heiden A" presented data for 71 facilities (extrapolated to represent 95 total facilities potentially subject to OSHA EtO short-term limit regulations), only four separate companies, operating nine separate facilities, currenty had EtO short-term exposure limits (*Ibid*, p. 12). "Heiden B" was based upon samples from nine companies. The report did not indicate how representative they might be of the universe of sterilizer facilities and chambers (Ex. 205-6, p. 26).

Heiden Associates made no visits to the facilities in its surveys. Although Heiden made follow-up calls by telephone, its staff included no engineers. Heiden's principal investigator testified that "we are economists, so we are not qualified to make judgments as to the feasibility or reliability or quality of the engineering estimates * * *" (Tr. p. 93). Heiden accepted the respondents' estimates of which items they needed, on checklists printed on the survey forms, and merely costed out the engineering control methods. Heiden also included work practice changes in the category of engineering controls and did not analyze or list them separately.

The derivation of cost estimates in Heiden's reports involved methodology which is not convincing to OSHA. For example, Heiden converted all data which were reported as "less than" or "greater than" a specific value to "equal to" that value for the purpose of computer analysis. A further bias entered from the use of the arithmetic mean to represent per-facility costs, which were than multiplied by the number of facilities. This allowed extreme estimates by a few respondents to distort results. For example, Exhibit 7 of the "Heiden A" shows that 17 respondents estimated incremental costs (without respirators) of equipment operation under a 5 ppm STEL to range from $0 to $2,249,520 per facility. The median cost was $0. Yet the arithmetic mean of $188,416 was taken to represent all 17 respondents. OSHA appreciates the willingness of HIMA and EOIC to submit the types of information contained in the Heiden surveys. However, OSHA has determined that the lack of independent engineering or industrial hygiene verification of any of the costs or compliance methods submitted to Heiden, together with the lack of actual site visits by the contractor, leaves the results of the surveys open to considerable question. Accordingly, the Agency does not believe that it can rely upon the estimates contained in the Heiden surveys.

Technological Feasibility

Site visit observations, exposure data, and reports from the trade literature have shown that, in the producer, ethoxylator, hospital, and medical product sterilizer sectors (and, by analogy, the spice manufacturing sector), achieving compliance with 5 or

10 ppm EL is feasible with the use of the same engineering and work practice controls determined by OSHA at the time of the final rule to be feasible to achieve the 1 ppm PEL. The engineering controls implemented by those employers who had achieved compliance with the 1 ppm PEL were standard and widely available controls: local exhaust and general dilution ventilation, the use of closed-loop sampling devices, vapor recovery systems at railcar loading racks, and enclosure/ventilation of aeration and quarantine areas.

HIMA has objected that Meridian did not try any of the controls which it said would work at the sites where it found high exposures (Tr. p. 39). However, Meridian actually observed these controls in use at other facilities, where they had proven effective in achieving the desired exposure levels (Tr. p. 46).

At least one spice manufacturing firm is planning to adopt a substitute for EtO, thus eliminating employee exposures (Meridian Research personal communication, spice company representative, November 21, 1986). OSHA believes it likely that other spice manufacturers will also be able to use a substitute sterilant.

Work practice controls used by employers at the sites visited to reduce exposures include: Opening ("cracking") sterilizer doors for 15 minutes before unloading the sterilizer, pulling rather than pushing carts containing offgassing goods, and performing manual leak detection.

The use of respiratory protection was observed during a few short-term activities: During railcar loading at the EtO producer facility and when entering walk-in sterilizers at medical product sterilization facilities.

In addition to exposure data obtained from site visits, a number of submissions to the EtO docket (Exs. 4–13, 11–132, 139, 179, 198A) indicate that a 5 ppm excursion limit can be achieved during operation of EtO sterilizers in hospitals. Several articles submitted by T. Joel Loving of the University of Virginia's Environmental Health and Safety Office show that the use of vacuum purge systems and exhaust hoods can reduce the 8-hour TWA to or below 1 ppm and the short-term limit to or below 5 ppm for 15 minutes.

The major engineering controls in use at the sites visited to achieve the excursion limits are the same controls that OSHA determined in the Regulatory Impact Assessment (Ex. 163) and JRB Associates' report (Ex. 6–22) to be necessary to achieve compliance with the current 1 ppm PEL. OSHA's analysis shows that, in some instances, employers may need to implement additional work practice controls, such as extending the period of offgassing in the sterilizer, to achieve compliance with a 5 ppm excursion limit. OSHA's findings thus demonstrate that it is feasible to comply with a 5 ppm excursion limit.

Summary of Costs

To assess the magnitude of the costs that might be incurred by employers to comply with a short-term limit, OSHA estimated the costs potentially associated with achieving a 5 ppm short-term limit at each of the nine facilities visited by Meridian Research. OSHA's analysis shows that the 5 ppm short-term limit was already being achieved at the EtO producer site, the ethoxylator site, one large medical product sterilizer facility, and three hospital sites. Therefore, no significant additional costs would be incurred at any of these sites to comply with a 5 ppm excursion limit.

At the remaining large medical product sterilizer site visited by Meridian, exposure data collected on the day-shift sterilizer operator show that both the 10 ppm and 5 ppm short-term limits, were achieved. However, samples taken on the night-shift operator at this site showed that his 15 minute short-term exposures exceeded 5 and 10 ppm. OSHA believes that this operator's short-term exposure could be reduced by allowing the sterilizer load to offgas inside the sterilizer for four hours before the sterilized product is removed by the operator. This practice would not interfere with the work schedule currently being used at this site and would thus be unlikely to result in an increase in costs. If allowing the load to offgas for 4 hours did not reduce this operator's short-term exposures to below 5 ppm, OSHA believes that the sterilization unit's work schedule could be adjusted so that the load could offgas for 8 hours before the operator unloaded the sterilizer.

Neither of the two small medical product sterilizer facilities was currently achieving the 5 ppm excursion limit, and one short-term sample taken at one site (Company F, Ex. 204) exceeded 10 ppm for a sterilizer operator. However, at both of these sites, sterilizer operators and a laboratory technician also had 8-hour TWA exposures that exceeded the current 1 ppm PEL. Area samples taken at these sites indicate that high ambient levels of EtO were present as a result of the offgassing of sterilized product. OSHA believes that installing ventilated, enclosed, quarantine areas and modifying existing ventilation systems are necessary in order to comply with the existing 1 ppm PEL and that these changes would substantially aid in achieving compliance with a 5 ppm excursion limit.

OSHA's findings thus demonstrate that employers are not likely to incur significant costs to comply with an excursion limit. These findings reflect site visit observations and evidence in the record (Ex. 11–132) that the engineering controls that are necessary to achieve the 1 ppm 8-hour TWA also can be implemented to reduce short-term exposures to 5 ppm, although some minor work practice changes may be necessary in some activities. In addition, in those limited situations in which changes in work practices and engineering controls are not feasible, some respirator use may be necessary in for certain sterilization operations, as discussed below.

The 5 ppm excursion limit will be associated with an increased cost burden primarily in connection with the provision dealing with exposure monitoring. The requirement for the monitoring of excursion levels will increase the burden of affected employers because the type of sampling required to evaluate short-term exposures is different from the type of monitoring required to monitor the final standard's 8-hour TWA PEL or the action level. Because some methods for monitoring short-term exposures to EtO have only recently been developed and become commercially available, the cost analysis assumes that employers in the affected sectors will not yet have been able to perform short-term employee monitoring and thus, that all affected firms will need to perform initial excursion limit monitoring. It is clear that this assumption is a worst-case analysis, in that some firms in the principally affected sectors have already performed some short-term sampling and thus will be able to submit previous monitoring results as long as they meet the accuracy requirements of the standard. Further, OSHA has used the cost of its own validated method (OSHA Method 50) as the basis of its monitoring cost estimates. To the extent that other available methods are less costly, these cost estimates will overstate the true monitoring costs under the excursion limit.

OSHA has based the cost estimate for initial monitoring on the assumption that each firm will conduct such monitoring in accordance with the OSHA 50 method. This is assumed to require the retention of the services of an industrial hygiene consultant for 8 hours, at a cost of $40.00 per hour, to collect the necessary short-term samples. The

effect of using this assumption is also to overstate costs somewhat, because many facilities have in-house industrial hygiene personnel and laboratory facilities available to collect and analyze their monitoring samples at a lower cost. This will also substantially overstate costs since data in the record now strongly suggests that passive dosimeters can adequately measure for the excursion limit.

OSHA's original estimate of a cost of $35 per hour for an industrial hygienist (53 FR 1729) was criticized as too low by the Association of Ethylene Oxide Users (Ex. 205-3, p. 6), EOIC (Ex. 205-15A, p. 27), the American Hospital Association (AHA) (Hearings, p. 130), and Kem Medical Corp. (Ex. 206-6, p. 4). These comments apparently based their comments on the need for a *certified* industrial hygienist. The standard does not require the person performing the monitoring to be certified. In response to the comments, Meridian Research reexamined the hourly rate of an industrial hygienist and indicated that a more accurate figure is $40 per hour. This cost includes the costs of pumps, sampling tubes, and packaging and mailing of samples for analysis (Ex. 223). AHA has objected that the sampling tubes cost approximately $100 each, according to "a basic phone survey to the industry itself" (Tr. pp. 130, 140). For the purpose of analysis, OSHA accepts Meridian's estimate, which includes material costs for sampling tubes based upon a supplier's catalog (Ex. 223).

The sectors principally affected by OSHA's EtO standard are: EtO producers; EtO ethoxylaters (*i.e.*, firms which use EtO as a feedstock chemical); sterilizers of heat- and moisture-sensitive medical products and devices; hospitals; and spice manufacturers. The number of short-term samples to be collected will depend on the number and pattern of activities occurring during the day that may cause elevated short-term exposures to EtO. The pattern of exposure varies from sector to sector; for example, sterilizer-operators using EtO to sterilize medical devices are generally exposed to elevated short-term exposures four or five times per shift, while the unit operator in an ethoxylation facility performs activities having the potential for short-term exposures two or three times in a working day.

To estimate the average number of short-term samples that employers in each of these sectors would collect to comply with an initial excursion limit monitoring requirement, OSHA relied on the feasibility study conducted by Meridian Research, Inc. [Ex. 204]. While conducting site visits to facilities in the affected sectors, Meridian collected from 3 to 10 short-term (15 minute) samples at each facility. In order to estimate monitoring costs, OSHA thus assumes that employers at each facility will need to collect an average of six short-term samples to fulfill their initial EL monitoring obligation. EOIC claimed that this assumption was "off by an order of magnitude" (Ex. 205-15A, p. 22). Kem Medical Products asserted that collecting only five or six samples "gives you no statistical validity" (Tr. p. 195). However, insufficient evidence has been submitted to persuade OSHA to change its assumption.

OSHA estimates that, under a worst-case scenario, employers in the five principally affected EtO sectors will incur a total cost of $2,526,925 for initial monitoring to comply with the excursion limit. Individual sector costs are: $7,030 for EtO producers; $20,549 for ethoxylators, $51,371 for medical products sterilizers; $2,433,375 for hospitals; and $14,600 for spice manufacturers. This estimate has been revised downward from the $3,161,480 in OSHA's original Proposal (53 FR 1730), primarily because of a drop in the estimated number of EtO-using facilities. (See Table B, below, taken from Ex. 223.)

OSHA has recognized the need to add to the estimated costs of initial monitoring per facility (which includes $320 for eight hours of hygienists' time, $210 for laboratory analysis for six samples, and $10.75 for one hour of clerical time to set up record keeping) an allowance for costs of periodic monitoring. On the basis of their site visits and their review of National Institute for Occupational Safety and Health reports, Meridian has estimated that approximately six percent of EtO-using facilities have at least one employee who is currently exposed below the 8-hour PEL of 1 ppm but above the proposed EL of 5 ppm. It is possible that promulgation of the EL would induce some facilities to change work practices at little or no cost and that employees who had been exposed over the EL would be under it by the time of initial monitoring. As a "worst case," six percent of all facilities would discover upon initial monitoring that they had to continue monitoring until two successive periodic measurements indicated that all employees were under the EL. Thus OSHA is adding an allowance for periodic monitoring costs of 6%, times two, times the total of $530 for conducting sampling and analyzing samples, times the number of facilities. Total costs for the EL standard thus increase to $2,824,128 under this revised worst-case scenario for employers in the five principally affected EtO sectors.

The cost estimates presented above assumed the use of charcoal tubes and OSHA Method 50. Costs would be even lower with the use of dosimeters. According to Assay Technology, Inc., more than 95% of personal monitoring tests for the 8-hour PEL are being done with some type of diffusional badge. (Ex. 206-2, p. 3). Similar dosimeters have been developed for personal monitoring tests for the 15-minute EL, using the same readers. Assay Technology's "EtO STEL BADGE" system which requires the same electronic badge reader as their 8-hour badge, has a list price of $14.00 per test, down to $7.50 per test with large quantity discounts. Establishments that do not have Assay Technology's Electronic Badge Reader may purchase it separately for $950, or at a discount with yearly badge orders (Ex. 206-2, p. 3). Kem Medical Products can collect 24 samples, including analysis, samples for a retail list price of $688.

OSHA believes that in general the only significant incremental costs of the 5 ppm EL involve initial monitoring, record keeping, and (for 6% of facilities) periodic monitoring. HIMA and EOIC have insisted that "ancillary costs" estimated by respondents to Heiden surveys should also be accounted for. OSHA has examined these categories. Leak detection, hazard communication and training, and medical surveillance for meeting the EL do not logically involve any significant incremental cost. There might be incremental administrative respirator program costs—*if* imposing an EL required putting respirators on employees who are now working without them. However, it should be noted that HIMA's "Heiden A" report, hearing testimony, and post-hearing comments (Ex. 222, pp. 4, 12) estimate that of 36 workers (two percent of all "potentially" exposed workers in the medical products industry) who are under the PEL and over 5 ppm short-term exposure. It is unclear how many are currently using respirators. Heiden's principal investigator testified (Tr. p. 87) that Heiden "didn't ask the specific details" of the administrative costs of respirators. Heiden's final "ancillary requirement, "other costs (e.g., "consulting", lab fees, administrative, etc.)" provides insufficient information to enable OSHA to evaluate or incorporate it into this analysis. Under EtO assumption that the number of employees in this group (greater than 5 ppm EL but below 1 ppm TWA) in the

affected industry is 406, these "other costs" cannot be determining and would probably be minimal.

EOIC has objected that the EL standard would impose significant "downstream" costs for products which are capable of releasing EtO in excess of the EL (Hearings, pp. 148–150, 155–163). EOIC was unable to indicate the extent of this potential problem. OSHA considers that, if a manufacturer had reason to believe that a product was capable of significant emissions, the manufacturer could monitor for 8-hour exposures (as required under the current standard) and for 15-minute exposures at the same time.

OSHA does not foresee nor do data in the record indicate that there will be any incremental cost in extending the current requirement for precautionary labelling to cover containers whose contents are capable of causing employee exposures above the EL. It is likely that containers of EtO products that could result in exposures above the excursion limit, also could result in exposures above the action level of 0.5 ppm as an 8-hour TWA. Products which may release EtO in concentrations above the action level are already required to be labelled under the 1984 EtO standard. Thus, there are likely to be few products, if any, that require labelling because the excursion limit may be exceeded while the action level may not be. OSHA believes that the possibility of such a situation arising is extremely remote. Moreover, EOIC has submitted no evidence of the extent of this purported problem.

Economic Impact and Regulatory Flexibility Analyses

Based on the proceeding cost analysis, OSHA has determined that the additional costs of complying with the proposed 5 ppm excursion limit are likely to be negligible for employers that are in compliance with the existing 1 ppm PEL. Thus the promulgation of a 5 ppm excursion limit is not likely to have a significant economic impact on typical firms, in each sector or cause adverse differential impacts on small entities in each sector.

Total estimated incremental cost of the 5 ppm EL is less than three million dollars. Total hospital care expenditures (the revenues of the hospital sector, where most EtO users are located) were nearly 180 *billion* dollars in 1986. OSHA agrees with Gas Monitoring and Analysis, Inc. that for hospitals which are in compliance with the PEL, there is "no significant economic impact caused by the pending excursion limit" (Ex. 205–25, p. 3). In the industrial sterilizer sector, OSHA notes that Meridian was told by the two small facilities which it visited that these companies' clients "insisted on full compliance with OSHA regulations and were willing to absorb any compliance costs necessary"* * * (Tr. pp. 37–38).

Relationship Between Short-Term and 8-Hour TWA Exposures to EtO

To address the Court's request that OSHA examine the impact of controlling short-term employee exposures on the residual health risks that remain at the 1 ppm TWA PEL, OSHA assessed the contribution of employees' short-term exposures to their 8-hour TWA exposures. To accomplish this analysis, Meridian obtained concurrent personal 8-hour TWA and short-term air samples during visits to sites in several sectors. Meridian then calculated each employee's total EtO exposure from short-term activities (in ppm-minutes) and each employee's total full-shift exposure in ppm-minutes (determined from the 8-hour TWA). This analysis permitted OSHA to determine the extent to which an employee's 8-hour TWA would be reduced by controlling that employee's short-term exposures.

For example, exposure data were obtained at one ethoxylator facility. The top operator had a non-detectable 8-hour TWA exposure and a single 15-minute exposure of 1.07 ppm that occurred while the operator was collecting a quality control sample from a railcar. Even assuming that this employee's 8-hour TWA was 0.05 ppm (i.e., the limit of detection), the exposure to EtO that occurred during railcar sampling contributed 67 percent of the operator's total exposure for the day. These results show that controlling the operator's 15-minute exposure during this activity (i.e. close loop sampling system) had a significant impact on reducing the employee's 8-hour TWA to well below 1 ppm (see Site Visit Report for Company A, Ex. 204). In addition, short-term and 8-hour TWA exposure data collected at three medical product sterilizer facilities show that reducing the short-term exposures of sterilizer operators and forklift drivers contributed significantly to reducing their 8-hour TWA exposures to below 1 ppm (see Site Visit Reports for Companies C, D, and F, Ex. 204).

This analysis of the contribution of exposures experienced during short-duration, high-exposure activities has shown that controlling short-term exposures has had a substantial impact on reducing employees' 8-hour exposures to EtO. Although most of the sites visited by Meridian will not need to implement additional controls to achieve compliance with an excursion limit of 5 ppm, one site may need to change its work schedule to extend the amount of offgassing time before removal of the load from the sterilizer or of biological indicators from sterilized product. OSHA believes other firms in the affected sectors may also need to implement additional work practices or alter their work schedules to accommodate longer offgassing times, and there may be some limited use of respirators where those controls are not effective or feasible.

OSHA has examine comments by HIMA on the existence of sterilization operations which take place in large industrial sterilizers continuously at full capacity over the full 24-hour day, seven day days a week, and which would not allow time for extended offgassing of sterilized materials. HIMA stated at the hearing that "most large sterilizers are already running continuous cycles." (Ex. 222). However, the Association did not provide additional information on the number of such facilities or the extent to which full capacity is being utilized. OSHA has evaluated HIMA's submittals and acknowledges that there may be some limited situations involving employee entry into large industrial sterilizers, under conditions of full capacity utilization and continuous sterilization cycles, in which there may not be adequate time for offgassing of the sterilized materials in the sterilizer before employees are exposed. In these situations, as is the case with the current 1 ppm TWA, employees would need to be protected by respirators during their entry into and exit from the sterilizer. However, based on its review of the record, including Meridian's site visits, OSHA does not believe that a general exclusion of "sterilizer unloading" is warranted. The Agency has determined that for most sterilizer unloading, a combination of engineering controls and work practices will enable employers to comply with the 5 ppm excursion limit.

Summary of Benefits

To the extent an excursion limit reduces average long-term exposures, then the cancer deaths prevented by adoption of an excursion limit represent the primary benefit derived from this action. As discussed previously in this preamble, it is not possible to quantify the number of deaths prevented by compliance with the excursion limit since data do not reveal the precise incremental EtO dose reduction that will result from limiting 15-minute short-term exposures to 5 ppm. However, OSHA has estimated the risk from a lifetime exposure, assuming exposure only once

a day to a 5 ppm short-term limit, with no other exposure or background levels of EtO, to be approximately 2 to 4 excess deaths per 10,000 workers. The calculated risks, 2 per 10,000 to 4 per 10,000 probably understate the overall risk because it has been established that short-term exposures often occur more than once per day and that background EtO concentration during the day is above zero, additionally contributing to worker exposure. Thus, OSHA believes that the risk from 5 ppm short term exposures will not be insignificant, even if such exposure constituted the employees' only EtO exposure during the workday (*See Industrial Union Department, AFL-CIO* v. *American Petroleum Institute,* 448 U.S. 607 (1980)).

OSHA believes that implementation of this amendment will act to reduce the number of EtO-related cancer cases, although the number of additional lives saved cannot be quantified.

Environmental Assessment-Finding of No Significant Impact

During OSHA's previous rulemaking on EtO, information was solicited from the public on a variety of issues including possible environmental impacts of a revised standard which might contain both a TWA and short-term limit. The information and comments submitted have been reviewed in accordance with the requirements of the National Environmental Policy Act (NEPA) of 1969 (42 U.S.C. 4321, *et seq),* the regulations of the Council on Environmental Quality (40 CFR Part 1500), and OSHA's DOL NEPA Procedures (29 CFR Part 11). As a result of this review, the Assistant Secretary has determined that this proposed action will not have a significant impact on the external environment.

EtO is used primarily as an intermediate in the production of several industrial products, such as antifreeze, polyester fibers, films, and bottles. EtO is also used as a pesticide, fumigant, and antimicrobial sterilant for medical products and spices, and in limited applications for items such as cosmetics, books, railcars, etc.

Adoption of an excursion limit is not anticipated to affect the external environment because: (1) The process equipment containing EtO generally consists of tightly closed and highly automated systems: (2) any emissions that occur to the external atmosphere would dissipate and disperse rapidly; and (3) no solid waste is directly associated what EtO fumigation and sterilization.

Although the removal of increased amounts of EtO from the workplace air might seem to contribute to the pollution of ambient air surrounding EtO operations and applications, this is not anticipated because direct exhaust to the external environment is regulated under EPA air quality standards. In cases where worker exposure is reduced by the use of improved control methods such as chamber ventilation and purge systems, atmospheric emissions of EtO would remain constant, having an insignificant impact on the external environment.

Only minimal amounts of EtO are released from manufacturing processes as wastewater effluents. Treatment of EtO containing wastes usually involves degradation in water (producing ethylene glycol). Wastewater treatment must comply with the requirements of the Clean Water Act of 1977, and under this standard, conventional biological wastewater treatment would effectively remove EtO from water effluents.

In cases where liquid EtO is transported or stored, there may be some potential for spills or leaks. Because of the nature of EtO, however, such occurrences are not anticipated to impact on the environment, since EtO quickly volatilizes and dissipates. Although instances of waste disposal have not been presented to the record, such disposal would be covered by EPA regulations and transportation would be regulated by the Department of Transportation. The requirements of the proposed standard will not alter present methods for waste disposal or transportation of EtO.

Based on this discussion, OSHA concludes that there will be no significant impact on the general quality of the human environment outside the workplace, particularly in terms of ambient air quality, water quality, or solid waste disposal.

V. Summary and Explanation

The requirements set forth in this notice are those which, based on currently available data, OSHA believes are necessary and appropriate to provide additional protection to employees who are now exposed to airborne concentrations of EtO at levels that pose a significant risk of material impairment to their health. OSHA has considered all data and recommendations on the short-term limit issue contained in the EtO docket (H-200).

The following sections discuss new individual requirements of the EtO standard. The sections include an analysis of the record evidence and the reasons underlying the adoption of the various provisions of the standard. The final standard adopts an additional permissible exposure limit of 5 ppm excursion limit averaged over a sampling period of 15 minutes. Engineering controls, work practices, and respirators are required where necessary to reach the excursion limit, and written compliance plans must be developed where the excursion limit is exceeded. Engineering controls must be completed within 6 months from the effective date of the standard. Several proposed provisions of the standard, including those on exposure limits, exposure monitoring, labels, regulated areas, and recordkeeping have been revised and clarified as described in detail below.

Scope and Application, Paragraph (a)(2)

This paragraph currently specifies that the EtO standard does not apply to products containing EtO where data demonstrate that the product is not capable of releasing EtO in airborne concentrations at or above the 8-hour TWA action level of 0.5 ppm. This provision provides for such materials to be excluded from coverage, regardless of their potential for short-term high exposures. Because employers will now be required to comply with an excursion limit as well as an 8-hour TWA, it is no longer appropriate for EtO-containing products to be excluded automatically from the standard if they are capable of exposing employees to EtO concentrations above the EL. Therefore, the product exclusion provision is being revised, as proposed, to incorporate the EL. Briefly, in order for a product containing EtO to be exempted from all provisions of this standard, it must be incapable of releasing EtO above both the 8-hour TWA action level and the 15-minute excursion limit. If a material is capable of exposing employees above any of the levels which would trigger protections under the standard, it is not appropriate to provide an automatic exclusion for such material. To illustrate the potential for dose reduction attributable to this provision it can be calculated that under the present standard a product is exempt if emitted dose remains below 240 ppm/minutes (0.5 ppm × 480 minutes). Thus, for products which may by nature initially emit relatively high EtO concentrations over a short time span, the current standard would exempt such products only if they are not capable of releasing 16 ppm EtO over a 15 minute period (16 ppm × 15 min = 240 ppm-minutes). Imposition of the excursion limit would not allow exemption in this example (e.g. for product exemption emitted dose could not exceed 75 ppm-minutes [5 ppm × 15 minutes], rather than 240 ppm-

minutes). Thus, incorporation of the excursion limit, under worst case exposure conditions, into the product exemption, will reduce the allowable release of EtO for products to be exempted from the standard.

The impact of this provision is felt primarily in the area of labeling. Some participants opposed the extension of the product exemption criteria to include the EL, based primarily on the potential burden of having to label products which do not currently require labeling, i.e., products which release EtO below the action level over 8 hours, but which could release EtO in concentrations exceeding the 15-minute excursion limit (Ex. 205–6, 205–11, 205–14). These commenters suggested that OSHA's generic Hazard Communication Standard (§ 1910.1200) adequately addresses issues associated with product labelling and warning of potential hazards to downstream users. In response, the Agency notes that the current labeling provisions for EtO, which were upheld by the Court in *Tyson*, as consistent with those set forth in § 1910.1200. In particular, § 1910.1200(d)(5)(iv) provides that a component in a chemical mixture is "hazardous" (and therefore the mixture must be labeled) if that component "could be released in concentrations which would exceed an established OSHA permissible exposure limit * * *" Permissible exposure limits in Subpart Z of Part 1910 take various forms, ranging from 8-hour time-weighted averages to "ceilings" to "peaks." Under the revised EtO standard, there will be two permissible exposure limits: The 1ppm 8-hour TWA, and the 5 ppm 15-minute EL. Thus, under § 1910.1200, an EtO chemical mixture which could release EtO in excess of either of these permissible exposure limits would require labeling. This is no different from the criteria contained in the revised EtO standard itself.

In testimony at the hearing and in their post-hearing comments (Ex. 225), EOIC contended that there would be an additional burden on manufacturers and formulators of EtO-containing products to provide data to downstream users, in order to enable those users to take advantage of the product exclusion under the standard. However, no data were provided to indicate how the burden would be increased over that of the existing provision, nor was there evidence as to products which currently qualify for exclusion but which would not qualify under the revised rule. OSHA believes that the testing procedures which determine a product's capability of releasing EtO over an 8-hour period can also be used to determine the maximum releases during 15 minute segments within that period.

The intent of the product exemption (paragraph (a)(2)) and labelling requirement (paragraph (j)(1)) is not to encompass products which under extremely unusual instances may unexpectedly or unpredictably release EtO above the excursion limit. OSHA's proposed language that products are within the scope of the rule and must be labelled if they are "capable of releasing" EtO above the excursion limit has caused confusion regarding OSHA's intended practical application of those provisions. OSHA agrees with the suggestion by the EOIC that product exemption and labelling would be more clearly defined by predicating exemption where objective data demonstrate it is "not reasonably foreseeable" that the product will release EtO above the excursion limit (Ex. 225). Thus, as EOIC suggests, OSHA amends paragraph (a)(2) to indicate that this section does not apply to EtO products where objective data demonstrate that the product "may not reasonably be foreseen to release EtO in excess of the excursion limit" * * *. Also as suggested by EOIC, OSHA amends the labelling requirement in paragraph (j) to require labelling of containers of EtO * * * "where contents may reasonably be foreseen to cause employee exposure above the excursion limit." (Labelling is discussed further below).

Permissible Exposure Limit, Paragraph (c)(2)

In the final amendment, OSHA establishes a 5 ppm excursion limit for EtO end revises proposed paragraph (c)(2) to clarify that the excursion limit is to be determined as a time weighted average over a sampling time of 15 minutes. The proposal required that the excursion limit was to be "* * * determined over a maximum sampling period of fifteen (15) minutes." The word "maximum" appears to have led to the misconception that 5 ppm was to be treated as a ceiling limit rather than a time weighted excursion limit. (Exs. 205–6, 205–16). OSHA has no data to support the adoption of a health related ceiling limit for EtO and did not intend to propose the adoption of such a limit. Therefore, for purposes of clarification, paragraph (c)(2) is revised to read: "The employer shall ensure that no employee is exposed to an airborne concentration of EtO in excess of 5 parts of EtO per million parts of air (5 ppm) as determined over a sampling period of fifteen (15) minutes."

OSHA proposed a 5 ppm EL as being both effective and feasible at lowering total EtO dose below that achievable through the 1 ppm 8 hour TWA alone. Other limits were suggested by several parties, ranging from Public Citizen's & AFSCME's recommendation of 3 ppm (Exs. 205–2, 205–9) to EOIC & HIMA's (Exs. 205–3, 205–6) OSHA has determined that, based on the Meridian data and other evidence in the record, a 5 ppm 15 minute EL is feasible and can be reliably and consistently monitored, using available monitoring methodology. There is insufficient evidence on the feasibility of monitoring and attaining lower short-term exposures. Further, the record indicates that no monitoring method has been thoroughly validated for use in monitoring 3 ppm over a 15 minute sampling period. By contrast the record reflects that a 10 ppm EL, while clearly feasible and measurable would not provide adequate reduction total dose, and that a 5 ppm EL is both achievable and effective.

With respect to the length of the permitted sampling period, OSHA believes that collection of EtO over 15 minutes is necessary to ensure that a sufficient amount of EtO is collected for accurate analysis.

Data in the record on available exposure monitoring devices and methods (discussed below under *Exposure Monitoring*) suggest that a reasonable adequate representation of typical short term exposures in the EtO industry can be obtained by performing sampling for a period of 15 minutes. While one commenter (Ex. 205–17) suggested reducing the permitted sampling period to 10 minutes, OSHA retains the proposed 15 minute period based on data in the record that indicates that a variety of devices have undergone validation testing over 15 minute periods and have been reported to exhibit an acceptable degree of accuracy under those test conditions. Equivalent validation test data for sampling over a 10 minute period are not in the record.

Other commentors suggested that the excursion limit sampling period should be related to the length of the short-term task being performed (Exs. 225, 205–6). EOIC (Tr. 157) pointed out that sterilizer loading and unloading can take up to 30 minutes in the medical products sector and that sampling should be averaged over the entire task period. EOIC stated that "The goal of short term exposure monitoring is observation, not interaction" (Tr. 157), and therefore, the length of the short-term task should dictate the length of the monitoring period. OSHA disagrees with these

arguments. The 15 minute monitoring period was chosen based on the length of time believed necessary to collect a sufficient amount of EtO for reliable analysis. It has been shown by data submitted to the record that 5 ppm can be feasibly measured by performing sampling for 15 minutes. More lengthy sampling is not necessary to collect enough EtO for analysis. To permit more lengthy monitoring periods over which the amount of EtO collected could be time-weighted would permit higher doses to occur for operations that take less than 15 minutes. HIMA in the Heiden report (Ex. 205–6) only 36 employees in the EtO medical products sector are exposed above the excursion limit during OSHA does not believe that a 30-minute period for determining the 5 ppm EL is appropriate, for several reasons. First, most employees exposed to short-term bursts of EtO receive those exposures in periods of 15 minutes or less. For example, based on the figure of 3600 to 4500 health care facilities performing EtO sterilization (Exs. 206–2, 205–22), OSHA estimates that 7,200 to 9,000 employees are exposed to short-term EtO bursts in these facilities, lasting 15 minutes or less. By contrast, HIMA's Heiden report indicates that only 36 employees have short term peak exposures 30 minutes in the health care manufacturing sector (Ex. 205–6). For an employee whose actual exposures are 15 minutes or less in duration, a 30-minute EL sampling period would result in an increased total dose of EtO as compared to the 15 minute EL. The employee would be allowed to have 150 ppm-minutes of exposure (5 ppm times 30 minutes) as opposed to 75 ppm-minutes (5 ppm times 15 minutes) under the 15 minute period. In essence, for employees exposed for 15 minutes, averaged over 30 minutes would double the total allowable short-term dose as compared with a 5 ppm 15-minute EL, and would not produce the desired reduction in total dose which this standard is directed at achieving.

OSHA has determined that exposure to EtO under the present standard still presents a significant risk of material impairment to employees. Based on the current record, OSHA believes that compliance with the excursion limit as set-forth in this paragraph will further reduce such significant risk.

As required, OSHA has given consideration to the economic and technological feasibility of the proposed and final excursion limit during the EtO rulemaking. In order to obtain the information necessary to allow the Agency to perform such feasibility analyses, OSHA contracted for the services of Meridian Research, Inc. of Silver Spring, Maryland, to perform site visits and exposure monitoring in representative EtO-using facilities prior to publication of the proposal (Ex. 204). In addition, Meridian staff provided testimony on feasibility at the hearing and provided an analysis of the feasibility issues and data provided to the record during the rulemaking proceeding. Based on these data, and data previously provided to the EtO record, OSHA believes that compliance with the excursion limit is both technologically and economically feasible (see "Regulatory Flexibility and Impact Analysis" section).

Exposure Monitoring, Paragraphs (d)(1)(i), (d)(1)(ii), (d)(2)(ii), (d)(3)(iv), (d)(4)(iii), (d)(4)(iv), and (d)(7)(ii)

Section 6(b)(7) of the Act (29 U.S.C. 655) mandates that any standard promulgated under section 6(b) shall, where appropriate, "provide for monitoring or measuring of employee exposures at such locations and intervals, and in such a manner as may be necessary for the protection of employees." The primary purpose of monitoring is to determine the extent of employee exposures to EtO.

Exposure monitoring informs the employer whether the employer is meeting the obligation to keep employee exposures below the established permissible exposure limits. Exposure monitoring also permits the employer to evaluate the effectiveness of engineering and work practice controls and informs the employer whether additional controls need to be installed. In addition, section 8(c)(3) of the Act (29 U.S.C. 657(c)(3)) requires employers to notify promptly any employee who has been or is being exposed to toxic materials or harmful physical agents at levels that exceed those prescribed by an applicable occupational safety or health standard. Finally, the results of exposure monitoring are part of the information that must be supplied to the physician, and these results may contribute information on the causes and prevention of occupational illness.

One of the more significant issues raised during this stage of the EtO rulemaking involved the availability of monitoring methods and equipment which could be used for an excursion limit. OSHA notes that many of the same arguments about monitoring were raised in the earlier stages of this rulemaking, as well. As was discussed in the preamble to the 1984 final rule, there are many methods available for monitoring EtO in the workplace. Although these methods varied considerably in accuracy and precision, OSHA was at that time confident that they would be refined within a short period of time after the final rule was issued. The record of this rulemaking indicates that such refinement has, in fact, occurred. Data submitted by several manufacturers of monitoring equipment indicates that monitoring of 8-hour TWA exposures is a routine matter today. Further, the available data also indicate that extending many of the existing monitoring methods, including those utilizing passive dosimeters, to incorporate 15-minute periods of exposure will not be a significant problem, either technologically or economically (Exs. 205–5, 205–20, 205–25). OSHA itself has modified and refined its monitoring technology, as reflected in its revised OSHA method 50 (Ex. 203). This method which no longer requires refrigeration of samples, has been validated by OSHA's Salt Lake City Laboratory for concentrations well below the 5 ppm excursion limit over a 15-minute sampling period. Although it was suggested by one commenter that only the OSHA laboratory would either be capable or willing to perform the analysis, (Ex. 206–3) the record indicates that such is not the case. A cursory set of telephone contacts of analytical laboratories by Meridian research revealed that other laboratories are available to do this work. Two such laboratories contacted by Meridian were Galston Technical Services in New York City and Analytics, Inc., in Richmond, Virginia.

It should also be noted that EOIC has submitted a revised monitoring method to ASTM for evaluation of its use at concentrations of less than 5 ppm over 15 minutes (Ex. 205–15). It is clear to OSHA that there are and will be methods available to monitor the excursion limit accurately to determine employee short-term exposures.

Further, the OSHA 50 is far from the only method available for monitoring the 5 ppm excursion limit. As noted above, the most promising development in the EtO monitoring area is the wide use and acceptability of passive diffusion monitors. These monitors, which involve the use of relatively-unobtrusive badges which are affixed to the employee's clothing, use different means of absorbing EtO from the employee's breathing zone. At the end of the sampling period, the badge is removed and analyzed. Data submitted to the record indicate that several dosimeters are now commercially available for use by the EtO industry. For example, as Laurence Locker of Kem Medical Products stated at the hearing with respect to the EO–TRAK device

manufactured by Kem Medical. "There is no difficulty in using this * * * badge to measure this short-term exposure limit" (Tr. 188). Assay Technology (Ex. 206–2) provided written testimony indicating that their "* * * EtO STEL Badge is specially designed to monitor 15-minute exposures in the range of 0–20 ppm * * *" and is "* * * fully available to the EtO industry in a convenient format which is easy to use."

Bacharach, Inc. (Ex. 205–20) also provided technical data with respect to their "AirScan" diffusion monitor. From their test data, Bacharach concluded that "* * * the Bacharach AirScan technology is capable of precisely determining compliance with a 5 ppm 15 minute STEL."

The standard does not specify which method of monitoring is used by the employer to monitor the excursion limit, just as it does not specify the method for monitoring either the action level or 8-hour TWA. The employer has considerable flexibility in determining the monitoring method or methods which best suit the type of work being done, the configuration of the workplace, and other factors.

A number of the specific monitoring provisions that were set forth in the Notice of Proposed Rulemaking have been modified in this final rule, based on data in the record. These provisions pertain to the use of prior results for initial monitoring determination, frequency of excursion limit monitoring, and required accuracy of monitoring methodology. The basis for these revised requirements and for retention of other proposed paragraphs is discussed below.

The final amendment to paragraph (d)(1)(i), as proposed, requires that the employer perform breathing zone sampling that is representative of the 15-minute short-term exposure of each employee. Paragraph (d)(1)(ii) is retained as proposed and requires that representative 15-minute short-term employee exposures be determined on the basis of one or more samples representing 15-minute exposures associated with operations that are most likely to produce exposures above the excursion limit for each shift for each job classification in each work area.

While these exposure monitoring provisions require that the employer determine the short-term exposure for each employee exposed to EtO, it does not necessarily require separate measurements for each employee. If a number of employees perform essentially the same job under the same conditions, it may be sufficient to monitor a fraction of such employees. Representative personal sampling for employees engaged in similar work and exposed to similar short-term EtO levels can be achieved by measuring the exposure of that member of the exposed group who can reasonably be expected to have the highest exposure. This result would then be attributed to the remaining employees of the group.

In many specific work situations, the representative monitoring approach can be more cost-effective in identifying the exposures of affected employees. However, employers may use any monitoring strategy that correctly identifies the extent to which their employees are exposed.

Existing paragraph (d)(2)(i) applies to the excursion limit, and requires employers to perform initial monitoring to determine accurately the short-term airborne concentrations of EtO to which employees are exposed. However, proposed paragraph (d)(2)(iii), which is modified in the final rule as discussed below, contains a provision designed to eliminate unnecessary and redundant exposure monitoring. As proposed, it would permit employers who have monitored short-term employee exposures to EtO within a one-year period immediately preceding publication of a final rule in the **Federal Register** to forego the initial monitoring required by paragraph (d)(2)(i) if the results of monitoring within this period have shown that their employees are not exposed to EtO levels above the excursion limit.

This provision was designed to make clear that OSHA does not intend to require employers who have voluntarily performed employee monitoring to repeat such monitoring if they have reliable and objective data showing that their employees are not exposed to EtO above the excursion limit. There were no substantive comments with respect to the monitoring provisions discussed above with the exception that several parties suggested that monitoring results taken more than over a year prior to publication of the standard should be acceptable in lieu of performing initial monitoring (Ex. 205–6, 205–16). OSHA agrees that a 1 year limitation on acceptable monitoring results may be unnecessarily arbitrary in the instance of EtO excursion limit monitoring. The issue with respect to an EtO short-term exposure limit was initially raised by the Agency in its 1982 ANPR. Data received during the ensuing rulemaking reveals that it has been feasible to monitor short-term elevated exposure for a number of years. In fact, the record reveals that a number of EtO facilities have been conducting monitoring for a voluntarily established short-term limit since at least 1984 (Exs. 11–68, 11–113). OSHA believes that the results of any prior monitoring designed to determine an employer short-term exposure, should be acceptable if such sampling was conducted in accordance with the monitoring provisions prescribed for excursion limit monitoring in this standard. That is, additional initial excursion limit monitoring is not required under this new revision if: prior exposures (paragraph (d)(1)(ii); if such from breathing zone air samples that are representative of 15 minute short-term exposures (paragraph (d)(1)(ii)); if such determinations were associated with operations that are most likely to produce exposures above the excursion limit (paragraph (d)(1)(ii)); and if the monitoring method was accurate, to a confidence level of 95 percent, within plus or minus 35 percent for airborne concentrations of EtO at the excursion limit of 5 ppm (paragraph (d)(6)(ii)). It is noted here that recognition of the fact that employers have been able to monitor for short-term exposures and have been doing so for many years, further supports OSHA's determination that such monitoring is clearly feasible under the new standard.

Based on the discussion above, final paragraphs (d)(1)(i) and (d)(1)(ii) are adopted as proposed, and proposed paragraph (d)(2)(iii) is modified in the final standard to permit the use of any prior monitoring results to fulfill the initial monitoring requirements prescribed under paragraph (d), as long as such monitoring satisfies all other requirements of the new monitoring provisions.

The final frequency of monitoring and termination of monitoring requirements regarding the excursion limit are found in paragraphs (d)(3)(iv), (d)(4)(iii) and (d)(4)(iv) and, with the exception of frequency of periodic monitoring, carry the same provisions as proposed. The excursion limit itself would not change the current frequency and termination of monitoring provisions as they apply to the TWA.

With the adoption of an excursion limit the final rule would contain a TWA, an excursion limit, and an action level. The interrelationship among these three exposure levels would determine the frequency at which employers are obligated to monitor employee exposures. There would be six possible exposure scenarios, or combinations of TWA and short-term exposures, that would determine the frequency of required monitoring if an excursion limit were promulgated. The table below lists these six exposure scenarios, along with the monitoring frequency for each. As indicated previously, the frequency of

monitoring dictated by the action level and TWA would not be changed by adoption of the excursion limit. However, these levels are included in the Table below to clarify what the overall monitoring obligations would be if all three triggering levels existed. (Note: "EL" means "excursion limit" in the table below).

Exposure scenario	Required monitoring activity
Below the action level and at or below the EL.	No monitoring required.
Below the action level and above the EL.	No TWA monitoring required; monitor short-term exposures 4 times per year.
At or above the action level, at or below the TWA, and at or below the EL.	Monitor TWA exposures 2 times per year.
At or above the action level, at or below the TWA, and above the EL.	Monitor TWA exposures 2 times per year and monitor short-term exposures 4 times per year.
Above the TWA and at or below the EL.	Monitoring TWA exposures 4 times per year.
Above the TWA and above the EL.	Monitor TWA exposures 4 times per year; monitor excursion limit exposures 4 times per year.

As is shown by the table above, the action level trigger largely determines whether employers must monitor employee exposure to EtO; the only exception would be the scenario in which 8-hour TWA exposures are below the action level and short-term exposures are above the excursion limit. In this particular case, the existence of an excursion limit would obligate employers to monitor short-term exposures 4 times per year at those job locations where the excursion limit is exceeded, but employers would not be obligated to monitor 8-hour TWA exposures at those job locations. Although OSHA proposed that excursion limit monitoring the performed semiannually where overexposure is found, comment was solicited on the adequacy of this monitoring frequency. The Agency sought comment on whether quarterly or even more frequent periodic monitoring where the excursion limit is exceeded was necessary due to the potential variability in burst type exposure levels from day to day, week to week, or month to month. Views were requested on whether semiannual monitoring of employees who are likely to receive short-term exposures above the excursion limit is sufficiently representative of expected exposures throughout the year.

Data submitted to the record suggest that OSHA's proposed semiannual period requirement may provide an adequate indication as to what an employeee's expected excursion limit exposure profile may be. Operations that cannot be controlled to below 5 ppm on a short-term basis by engineering controls may be subject to widely fluctuating excursion exposures. For example, field investigations conducted by NIOSH (Ex. 205–17) revealed that short-term exposures in 2 poorly controlled hospital sterilization operations ranged from 0.2 ppm to 17.6 ppm. Triodyne, Inc. provided hospital sampling data they collected that revealed 8-hour TWA exposure ranging from 0.1 to 0.6 ppm, while short term exposures during door opening ranged up to 10 ppm (Ex. 205–1). Assay Technology stated that high exposure variations require frequent monitoring (Ex. 2062). AFSCME commented that monitoring should be quarterly and preferably monthly (Ex. 205–9). MDT asserted that continuous monitoring of excursion levels in the only real protection for workers (Ex. 205–22). Gas Monitoring and Analysis, Inc. recommended that continuous documentation of exposure variations is necessary to allow employers to focus on control of short-term exposures (Ex. 205–25). This commenter also stated that monitoring only for the 8-hour TWA leads to workability problems in complying with the excursion limit. Kem Medical stated that continuous monitoring should be performed due to the potential for leaks, spills, and equipment malfunction, and that periodic diagnostic monitoring for the excursion limit is essential (Ex. 206–6). Kem Medical further testified that at least quarterly monitoring should be prescribed. HIMA supported OSHA's proposed semiannual periodic monitoring provision (Ex. 206–1), as did Professional Medical Products (Ex. 205–16). These two commenters further suggested that excursion limit monitoring frequency should be permitted as necessary as determined by professional judgment. Assay Technology (Ex. 206–2) suggested adopting the short-term sampling strategy recommended by Leidel and Busch (Ex. 205–17) that "* * * the employer should monitor each employee in such a fashion that there is a high dose of confidence that each employee has a high percentage of daily exposures below the standard. OMB (Ex. 205–27) urged that OSHA require EtO excursion limit monitoring "as necessary" as prescribed in the recently promulgated benzene standard (52 FR 34460).

The record on EtO indicates that short-term exposures to EtO occur, for the most part, at predictible times during recognized operations (sterilized unloading, tank changing, sterilizer entry etc.) and that the magnitude of such excursions can be great in those instances where the excursion limit is exceeded due to lack of effective controls. It is during periods when the excursion limit is exceeded poorly controlled operations, therefore, that monitoring is justified. This is based on the assumption that exposures which will exceed the excursion limit, as determined by initial monitoring, will continue to exceed the excursion limit whenever that particular activity is performed. Thus, such instances should be closely observed, especially in view of the potentially wide fluctuation in the magnitude of such exposures.

Excursions are experienced predictably in the EtO industry, as opposed to the types of short-term exposures encountered in operations in the benzene industry. In the benzene industry, most short-term bursts are encountered unpredictably. Thus, a requirement to monitor "as necessary" may be appropriate for benzene excursion determinations since it is not clearly defined when short-term benzene exposures will occur. For EtO, however, most burst exposures occur during recognized activities and can fluctuate widely in magnitude. Thus, periodic monitoring for EtO at a minimum frequency is appropriate because it can be performed during periods known to be present potential exposure problems. Based on EtO exposure patterns, OSHA believes that semiannual periodic monitoring, as proposed, is inadequate. It was pointed out by one commenter that semiannual monitoring is "statistically useless" (Ex. 205–26). OSHA agrees and, therefore, requires at least quarterly excursion limit monitoring in the final rule. OSHA also requires additional periodic exposure monitoring where necessary to determine the extent to which an employee exposure exceeds the excursion limit, as suggested by commenters cited above.

Paragraph (d)(4)(iii), permits termination of excursion limit monitoring where initial monitoring required under paragraph (d)(2)(i) reveals employee exposure to be at or below the excursion limit. Likewise, paragraph (d)(4)(iv) permits termination of the periodic excursion limit monitoring under paragraph (d)(3), if at least two consecutive excursion limit measurements taken at least 7 days apart, are at or below the excursion limit. These are the same termination of monitoring requirements that were

proposed and are also the same requirements applicable to the existing action level (i.e. TWA monitoring not required where exposures are below the action level). OSHA believes that incorporating some monitoring termination mechanisms with respect to the excursion limit is reasonable and appropriate as proposed. Comment was requested on these proposed amendments. Comment was particularly requested on the degree of confidence that could be placed in assuming that short-term exposures would remain below the excursion limit, if initial monitoring or two specific periodic measurements indicated such. The Agency requested data on whether short-term EtO exposures in industry could be expected to consistently remain below a given limit, or whether the magnitude of short-term exposures fluctuates so frequently and widely that more stringent demonstration of short-term exposure stabilization was necessary prior to permitting the termination of excursion limit monitoring.

Data were submitted to the record that reveal that relatively large fluctuations in short-term exposure levels can occur during sterilizer unloading operations for which adequate engineering and work practice controls have not been instituted (Ex. 205–17, 206–1, 206–2). Other data reveal, however, that exposures below the excursion limit can be consistently maintained through effective implementation of engineering controls such as local exhaust ventilaton at the sterilizer door and vacuum pump discharge, sterilizer cycle modification, and work practices such as leaving the sterilization area after door opening (Ex. 205–17, 205–22, 205–25). As stated by Meridian Research during testimony at the hearing:

> In the hospital sector, extensive data in the docket, from our site visits, and from NIOSH surveys show that the use of local exhaust ventilation and proper handling of sterilized goods will maintain the short-term exposures of sterile supply technicians to levels below the 5 ppm limit" (TR. 34).

James E. Notarianni of Gas Monitoring and Analysis, Inc., stated:

> I believe that the 5 ppm excursion limit is highly achievable within the hospital gas sterilization environment. In my experience as a consultant to hundreds of hospitals throughout the country, providing real-time EtO exposure measurements as well as breathing zone average exposure measurements, I feel that most hospitals will not experience difficulty maintaining exposure below the 5 ppm excursion limit. The current level of engineering controls generally in use with hospital EtO sterilization equipment, if operating as designed, should be capable of minimizing employee exposure below 5 ppm as a 15 minute average. (Ex. 205–25)

Thus, OSHA believes that employers controlling exposures to within the excursion limit by the engineering controls, and work practices prescribed in this standard are able to maintain such exposures to within that level, mitigating the need for periodic monitoring. As discussed below, however, subsequent exposure determination is required in certain instances. Existing paragraph (d)(5) of OSHA's EtO standard requires additional monitoring for TWA exposures whenever there has been a change in production, process, control equipment, personnel or work practices that may result in new or additional EtO exposures. With the adoption of an excursion limit, revised paragraph (d)(5) will, as proposed also require additional excursion limit monitoring where the employer suspects that workplace changes may increase short-term exposures. The Agency requested comment on this proposed provision. There were no objections to this proposed requirement for additional exposure monitoring. Support for this provision was provided by HIMA in their written testimony as follows: "HIMA agrees that short-term monitoring should be repeated whenever situations arise or workplace changes occur which could possibly increase employe exposure (Ex. 206–1)." OSHA therefore, adopts this provision as proposed.

Paragraph (d)(6) of the current EtO standard requires that monitoring methods be accurate to within plus or minus 25% for EtO concentrations at the 1 ppm TWA, and plus or minus 35% at the action level of 0.5 ppm. These accuracy specifications were based on data in the record that showed that several EtO measurement methods and devices were readily available to employers, and that these methods and devices could meet the specified accuracy requirements for compliance determinations. OSHA believed at the time of the proposal, that a number of measurement methods and devices were also available to employers that could accurately determine compliance with the EtO excursion limit. These included the Qazi-Ketcham Method (Ex. 11–133), direct reading instruments such as infrared detection units, photoionization detection units and gas chromatographs, and the recently developed OSHA method 50 (Ex. 203). Other devices, such as passive dosimeters, were also being developed for use in determining short-term exposures. Data available at the time of the proposal did not indicate, however, that dosimeters were yet capable of accurately measuring short-term EtO levels. Further, because of the wide range of methods and the developmental work being conducted at the time, OSHA did not propose specific accuracy limitations with respect to excursion limit monitoring. The Agency indicated in the Notice of Proposed rulemaking that it believed that additional data were needed to reach an appropriate determination on this issue of accuracy of excursion limit sampling.

Data submitted to the record convinces the Agency that an accuracy requirement for excursion limit monitoring is necessary. For example, the Association for the Advancement of Medical Instrumentation commented that an "* * * issue that concerns us is the absence of accuracy requirements for STEL monitoring. We feel that it is important that OSHA establish accuracy requirements in the final standard's." (Ex. 205–13). Gas Monitoring and Analysis, Inc., comments that they" * * * strongly support the inclusion of an accuracy requirement for short-term exposure monitoring" (Ex. 205–25). Janet Patzman, a Certified Industrial Hygienist employed by a firm that sterilizes packaging components states that:

> OSHA's decision not to propose "specific accuracy limitations with respect to STEL monitoring renders this standard unenforceable. Without defined precision and accuracy requirements for short term monitoring methods, the monitoring becomes a meaningless exercise; there is no recourse or proof that a short term limit has been exceeded. If an employer has conducted short term monitoring by any method indicating compliance, without defined validation parameters OSHA will not be able to "prove" that short term limits are being exceeded and that exposure control measures are required. OSHA must not promulgate a standard without precision and accuracy requirements for an acceptable monitoring method. (Ex. 205–26).

Data in the record further indicate that an accuracy of plus or minus 35 percent, at the 95 percent confidence level, is appropriate and is achievable by a variety of available sampling devices and methods. As discussed previously, several manufacturers of passive diffusion monitors submitted data that suggested that those devices are now suitable for determining 15 minute short term EtO exposures. Included in those submissions were accuracy specifications for those devices. AMSCO provided test data reporting an accuracy of plus or minus 11.4 percent for measurements taken at the excursion limit level by the STELSCAN diffusion monitor (Ex.

205–5). Bacharach reported that their AirScan monitor is capable of measurements in the 3 to 30 ppm range for 15 minutes with an accuracy of plus or minus 10 percent to plus or minus 18 percent (Ex. 205–25). Assay Technology states in their submission that their ChemChip/STELs car has been fully validated at plus or minus 35 percent accuracy at the 5 ppm level (Ex. 208–2. Kem Medical Products Corp. concluded from validated test data on the EO-Trak badge that the accuracy is approximately plus or minus 15 percent, with 95% confidence, for badges exposed to 5 ppm for a period of 15 minutes (Ex. 2056–6). During the informal hearing, Dr. Laurence Locker of Kem Medical Products testified that the accuracy limitation" * * * should not be more stringent than plus or minus 35 percent * * * I would have no trouble * * * meeting that" (Tr. 196).

In conclusion, it is clear to OSHA, based on data in record, that adoption of excursion limit accuracy requirements are necessary to ensure that employees exposures are adequately determined. OSHA also finds that the record supports adoption of accuracy parameters of plus or minus 35 percent at the 95 percent confidence level. As discussed above, the Agency further believes that employers will be able to choose from a variety of exposure monitoring methods that will be in conformance with these requirements.

OSHA, therefore, adopts in final paragraph (d)(6)(ii), the requirement that monitoring to a confidence level of 95 percent, shall be accurate, to within plus or minus 35 percent for airborne concentrations of EtO at the 15 minute excursion limit of 5 ppm.

Final paragraph (d)(7) requires that employers notify employees of the results of excursion limit monitoring performed pursuant to the standard, and inform employees of corrective action being taken by the employer to reduce exposure to or below the excursion limit where the excursion limit has been exceeded. These are the same notification requirements as proposed. Such notification has been determined to be appropriate where TWA monitoring is performed, and is believed to be appropriate where excursion limit monitoring is performed. No objections were received with respect to this proposed requirement. OSHA therefore adopts paragraph (d)(7) as proposed in the final standard.

Regulated Areas, Paragraph (e)(1)

The final provisions of paragraph (e) require employers to identify as regulated areas any locations in their workplaces where occupational exposures to airborne concentrations of EtO exceed the excursion limit or can reasonably be expected to exceed the excursion limit.

The final EtO provision for designating regulated areas conforms to the provision established in the recently promulgated benzene standard (52 FR 34460). Commenters appropriately pointed out that OSHA's proposed regulated areas language for EtO (e.g. that regulated areas be established" * * * wherever * * * exposure * * * may exceed the * * * excursion limit) unreasonably required permanent designation of areas where transient or temporary excess exposures occurred (Exs. 205–11, 205–15, 205–16). OSHA's intention with respect to the provision is to only require designation when excessive exposure occurs.

The language of the final standard therefore has been changed to include language that states that a regulated area is to be established where airborne concentrations of EtO "exceed, or can reasonably be expected to exceed, the excursion for 15 minutes." This also conforms to the comparable provision of the recently promulgated Asbestos Standard (29 CFR 1910.1001). OSHA believes that this new wording more clearly defines the intent of the provision, that, when an employer reasonably expects exposures to be above the excursion limit at a work location or site, he should establish a regulated area in order to prevent employees from unknowingly entering a high exposure area without the proper respiratory protection.

Texaco, Inc. in its submission (Ex. 205–11) stated that areas of a facility that" * * * may be subject to transient or temporary EtO exposures, especially during maintenance activities * * * should be considered "temporarily regulated." OSHA agrees with this assessment.

The intent of OSHA's regulated area requirement is to protect employees from unknowingly entering areas where their exposures would be expected to be above the excursion limit. The final standard, therefore, requires establishment of regulated areas where a reasonable expectation exists that the excursion limit would be exceeded if an employee were to work at that location all day. This both warns employees of the possible need to wear respirators and to keep out if they have no need to be present.

Regulated areas are to be established at all work areas where the excursion limit is exceeded, including maintenance operations. Areas where transient activities such as maintenance operations are being performed and where exposures are temporarily over the excursion limit only need to be temporarily demarcated in the same manner as other areas of overexposure so employees who are not needed in these areas will stay out, and so employees who must enter the areas will put on respirators before entering them. The regulated area provisions of this standard are similar to other OSHA health standards.

Methods of Compliance, Paragraphs (f)(1)(i), (f)(1)(ii), (f)(2)(i) and (f)(2)(ii)

As discussed previously (see section on Summary of Regulatory Flexibility and Impact Analysis) OSHA believes that compliance with the proposed excursion limit can be accomplished by the majority of the EtO industry through implementation of feasible engineering and work practice controls. OSHA, therefore, requires in paragraph (f)(1)(i) of the existing EtO standard, that the employer institute engineering and work practice controls to reduce and maintain employee exposure to or below the excursion limit except to the extent that such controls are not feasible. The final rule further requires, in paragraph (f)(1)(ii), that wherever feasible engineering controls and work practices that can be instituted are not sufficient to reduce employer exposure to or below the excursion limit the employer shall use them to reduce exposure to the lowest levels achievable by those controls, and shall supplement them by the use of respirators. These final provisions are the same as those proposed. Based on available evidence, OSHA believes that the use of engineering and work practices controls will reduce employer exposure to or below the excursion limit for practically all situations. OSHA recognizes in paragraph (f)(1)(iii) of the existing standard, however, that there are some situations where engineering controls are not generally feasible, especially as they pertain to control of short-term exposures. These EtO activities include: Collection of quality assurance samples from sterilized materials; removal of biological indicators from sterilized materials; loading and unloading of tank cars; changing of EtO tanks on sterilizers; and vessel cleaning. These operations generally result in short-term high exposures. Thus, considering that the existing standard permits the use of respirators during these difficult to control activities, OSHA has greater confidence that it is feasible to control virtually all other short-term exposure activities through implementation of engineering and work practice controls. In the Notice of Proposed Rulemaking,

OSHA requested comment on whether employers should be permitted to use respirators to achieve compliance with the excursion limit in other situations.

Industry commenters, primarily from the EtO medical products sterilizing sector, asserted that respirator use should be permitted as the primary excursion limit control means for EtO sterilization operations involving entry into large volume walk-in EtO sterilization chambers for product removal. (Ex. 205–6, 205–14, 205–16, 205–26). These commenters asserted that engineering and work practice controls are economically and technologically infeasible for control of this activity and, therefore, respirator use for excursion limit compliance in this instance should be explicitly permitted under the standard.

OSHA has evaluated the available data on the feasibility of the 5 ppm excursion limit in the affected industry sectors, including and has determined that with few exceptions, noted below, employers should have little difficulty in coming into compliance. As reflected in the EOIC submission (Ex. 205–15) and Meridian's site visits (Ex. 205), the EtO production and ethoxylation sectors are almost totally in compliance with the 5 ppm EL at present. The only employees who would be directly affected by the EL in those sectors are those whose tasks are already recognized under the current standard as being generally infeasible to control by engineering and work practices, namely such operations as tank car loading and unloading. (Paragraph (f)(i)(ii) of the current standard allows for the 1 pm TWA to be met through use of respirators for these operations). Thus, the impact of the EL on EtO production and ethoxylation sectors will be minimal.

Similarly, the record indicates that for most sterilization uses of EtO, namely in hospitals and contract sterilizers, exposures can be controlled to meet the EL through a combination of engineering and work practice controls, with some limited use of respirators in large industrial sterilizing facilities under certain circumstances. As is noted in OSHA's regulatory analysis, and as was reflected in the reports of Meridian's site visits, meeting the EL in sterilization facilities involves the control of EtO from two basic sources: first, from the sterilizer itself, and, second, from the sterilized materials, which continue to offgas after the sterilization process, thus exposing employees who move the materials from the sterilizer to storage areas. As the American Hospital Association (AHA) noted in their testimony, the key to controlling EtO exposure from sterilizers in hospitals, which tend to produce short periods of high exposures and very low background levels, is to install certain sterilizer safety features and implement proper work practices. As Freelove S. Knott, R.N., representing AHA, discussed,

> These work place safety features include continuous or pulsing purges that prevent ethylene oxide build up in the sterilizer chamber before the door is open. Installation of dedicated local exhaust at the door opening to remove residual ethylene oxide present as the door opens. An audible alarm to alert the operator when the cycle is completed and the use of transfer carts or baskets to avoid operator exposure to ethylene oxide through the handling of products transferred from the sterilizer to the aerator. (Tr. 121).

The types of controls discussed by Ms. Knott are the same types of controls used to control exposures to meet the current 1 ppm TWA, and are clearly feasible.

Data submitted by the National Institute for Occupational Safety and Health (NIOSH) further support the feasibility of a 5 ppm EL in hospitals (Ex. 205–17). NIOSH investigations of sterilizers control systems in 9 hospitals indicated that the following control measures were effective in controlling EtO exposure: Modifications of the sterilizer cycle to reduce end of cycle EtO concentrations inside the sterilizer chamber, local exhaust ventilation at the vacuum pump discharge, and above the sterilizer door. Work practices that helped to reduce employee exposure to EtO included "cracking" the sterilizer door for 15 minutes before opening it and removing sterilized goods, pulling (not pushing) carts containing EtO-sterilized materials, and performance of leak detection.

Many of the same types of controls and procedures which are effective for lowering EtO exposures in hospitals can also be effective in smaller sterilizers used in industry. As noted by Dr. Laurence Hecker of HIMA, "I think it is a matter of scale * * * (Regarding) our R & D units, * * * which tend to be the same size as hospital sterilizers. If one were to remove goods from a small sterilizer the size of a microwave oven it would not be an engineering challenge or very—or extremely costly, I would think, to be able to engineer some type of an activity where you take the goods out and do something with them." (Tr. 105–106).

OSHA is well aware of the greater difficulty involved in controlling EtO exposures in the unloading of larger sterilizers, for both the 1 ppm TWA and the 5 ppm EL. In the preamble to the final rule in 1984, OSHA anticipated that compliance with the PEL might involve some limited use of respirators. As evidenced by the data provided by HIMA in the EL phase of the rulemaking, the Agency's assessment has proven to be accurate. It is true for the EL, as it is with the TWA, that some operations may need to supplement engineering and work practice controls with respirators. However, as was also the case with the 1 ppm TWA, OSHA does not believe that the need to use respirators in unloading sterilizers under certain conditions justifies a wholesale finding that engineering and work practice controls for all unloading of sterilizers are, therefore, infeasible. The record clealy shows that for most operations involving sterilizer unloading, engineering and/or work practice controls are feasible to control employees' exposures below the EL. Meridian's site visits provide graphic evidence of this fact. As Meridian testified at the hearing,

> We paid particular attention to the way we selected small medical product sterilizers because we were aware from the earlier rulemaking that they anticipated great problems. So, what we did was to go into the record and find, thanks to the EOIC, a list of—I think the number was six, it may have been larger, small companies which came into the record in the earlier rule making and said that if they had to comply with the one ppm TWA they would have to go out of business and if they had to do a STEL, I mean well they would leave before we even published. So we went into that worst case group. We selected the companies that really thought they couldn't do anything at all, and of that group we selected two who were willing to host a site visit and those other two we reported on, they ought thus to be really worst case. They were as happy as we were to find that it wasn't going to be quite so awful. (Tr. 55).

Meridian determined that a change in work practices and a longer offgassing time for sterilized materials in the sterilizer were sufficient to control employee exposures in those facilities that they visited. OSHA recognizes that the work practices recommended by Meridian would not work in all sterilization installations under all operating conditions. In particular, OSHA acknowledges that there may be difficulty in one type of sterilization operation: where sterilization of medical products and other materials is performed in large, room-sized sterilizers into which employees must enter to remove those materials after sterilization, and where those facilities are operated in consecutive 8-hour shifts throughout the full 24-hour day, where it is not possible to provide additional

offgassing time for the sterilized materials in the sterilizer without sevrely disrupting the production process and capacity. As noted above, the Agency has long recognized the problems associated with this type of operation. The standard allows for findings of infeasibility of given operations, and the employer making such findings under the standard must provide adequate respiratory protection for his employees. Therefore, while OSHA recognizes some potential for infeasibility in some operations, the Agency does not believe that it justifies a blanket finding of infeasibility for "sterilizer unloading" per se.

OSHA therfore retains the requirement, as proposed in paragraph (f)(1)(i), that employers institute engineering and work practice controls to reduce and maintain employee exposure to or below the excursion limit except to the extent that such controls are not feasible.

Final paragraph (f)(2)(i), as proposed, requries, where the excursion limit is exceeded, that the employer establish and implement a written program to reduce employer exposure to or below the excursion limit, by means of engineering and work practice controls, and by the use of respirators when permitted. There were no objections to this proposed provision.

OSHA therefore adopts this requirement as proposed, based on the determination that the written plan for achieving the excursion limit is as essential as the written plan requirement adopted for achieving the TWA, in ensuring that the employer implement the necessary controls to reduce exposure. The plan also provides the information that would allow OSHA, the employer, and employees to examine the excursion limit control methods chosen and to evaluate the extent to which these planned controls are being implemented. As with the TWA written plan, the excursion limit compliance plan will be accessible to individuals designated in paragraph (f)(2)(iii) for inspection and copying.

Final paragraph (f)(2)(iv), as proposed, prohibits employee rotation as a means of compliance with the excursion limit for the same reasons that employee rotation is not permitted for compliance with the TWA. This prohibition is consistent with OSHA's view that this control strategy is not appropriate in occupational environmetns involving exposure to potential carcinogens. It results in exposure of a large number of employees to levels of EtO which still present a significant risk. There were no objections to this proposed provision and, therefore, for the reasons discussed above, the final standard includes this requirement.

Respiratory Protection and Personal Protective Equipment, Paragraph (g)(1)(iii)

The final standard, with adoption of an excursion limit, provides that respirators be used to limit short-term employee exposure to EtO in the following circumstances:

(i) During the interval necessary to install or implement feasible engineering and work practice controls to achieve the excursion limit;

(ii) In work operations such as maintenance and repair activities or vessel cleaning or other activities for which the employer establishes that engineering and work practice controls are not feasible to achieve the excursion limit; and

(iii) In work situations where feasible engineering and work practice controls are not yet sufficient to reduce exposure to or below the excursion limit.

These same requirements apply under the current standard with respect to respirator use in complying with the TWA, and are based on OSHA's established policy on compliance methodology (see preamble discussion in the current EtO standard, 49 FR 25734).

Other requirements under this paragraph (g) dealing with "Respirator selection" and "Respirator program," remain unchanged and apply where respirators are used to achieve the excursion limit. There was no substantive objection to these provisions in the record and, therefore, they are adopted as proposed.

Communication of EtO Hazards to Employees, Paragraphs (j)(1)(ii), (j)(3)(i)

The existing EtO standard requires, in paragraph (j)(1)(ii), that employers ensure that precautionary labels are affixed to all containers of EtO whose contents are capable of causing employee exposure at or above the action level. OSHA also adopts in this paragraph, a requirement for labelling of containers of EtO whose contents can foreseeably be expected to cause employee exposure above the excursion limit. This requirement, as discussed above under *Scope* and *Application*, does not conflict with nor exceed the provisions under the Hazard Communications standard that require labelling of hazardous materials that could give rise to employee exposure above an established exposure limit. Rulemaking participants were in favor of ensuring that the final labelling provisions for EtO conformed to and did not go beyond those in the Hazard Communication Standard. The final EtO labelling requirements satisfy those suggestions.

As discussed previously, various participants objected to expanding the labelling requirement based on the potential burden associated with product evaluation. OSHA notes, however, that employers are required under the 1984 standard to evaluate and label EtO products capable of causing exposure above the action level. OSHA believes that the information the employer has gained in performing product evaluation response to this current requirement will substantially assist them in determining the potential for release of ETO above the excursion limit could be exceeded. In addition, employers are aware that, in general, properly offgassed EtO products retain little EtO that may be released downstream. Peak exposures during offgassing will occur immediately upon conclusion of sterilization and diminish over time. Thus, EtO products that may be removed after sterilization and packaged in tight containers without the benefit of a proper offgassing period, would be candidates for products capable of causing substantial downstream exposures. These products are to be labelled, in accordance with the EtO and Hazard Communication Standard, to warn downstream employees who otherwise would be unaware of the existence of a hazardous situation of the potential for such exposure.

It has been suggested (Ex. 225) that the EtO labelling requirement is more restrictive than that required by Hazard Communication. On the contrary, OSHA believes that requiring that EtO products to be labelled only if they may result in exposure above the action level or the excursion limit, is less restrictive than the requirement under Hazard Communication. By contrast, the Hazard Communication standard requires that warning labels be provided for a substance if it is simply determined to be hazardous. Ethylene oxide is considered a hazardous chemical under the Hazard Communication standard by virtue of it having established permissible exposure limits in Part 1910, Subpart Z and by virtue of it being a human carcinogen. Further, OSHA believes that exposure to EtO at 5 ppm or above for 15 minutes, continues to present a significant risk of adverse health effects to affected employees. Thus, warning employees that exposure to a product may present a significant risk to their health is justified. This warning will alert employers to implement control means to ensure that the material will be used in the

workplace in such a manner that the excursion will not be exceeded, thus, reducing the dose of ETO that employees would otherwise receive.

The intent of this labelling requirement is not to encompass products which under extremely unusual instances may unexpectedly or unpredictably release EtO above the excursion limit. OSHA's proposed language that products be labelled if they are "capable of releasing" EtO above the excursion limit has caused confusion regarding OSHA's intended practical application of the provision. OSHA agrees with the suggestion by the EOIC that product exemption would be more clearly defined by predicating exemption where objective data demonstrate it is "not reasonably foreseeable" that the product will release EtO above the excursion limit (Ex. 225). Thus, as EOIC suggests, OSHA amends the labelling requirement in paragraph (j) to require labeling of containers of EtO * * * "whose contents may reasonably be foreseen to cause employee exposure above the excursion limit.

Existing paragraph (j)(3)(i) requires that information and training on EtO be provided to employees exposed above the action level. OSHA also adopts in this final rule, as proposed in paragraph (j)(3)(i), a requirement that information and training on EtO be provided to employees exposed above the excursion limit. There were no objections to this requirement.

OSHA is adopting these provisions based on the determination that informing employees through labeling and training that high levels of hazardous materials might be released into the workplace will better enable affected employees to take precautionary measures to protect themselves.

Dates, Paragraph (m) Effective date

As proposed, the final amendments to the EtO standard would become effective sixty (60) days following publication in the **Federal Register**. In order to establish appropriate start-up dates from the effective date, OSHA requested comment on the length of time employers believed would be necessary in order to achieve compliance with the proposed excursion limit, and the time necessary to establish additional exposure monitoring, respirator, and training programs that would be required by adoption of an excursion limit for EtO. The startup dates discussed below that are established for the various new provisions of the final standard are based on the record and on OSHA's experience with other standards including the 1984 EtO standard, as to the time required for employers to complete exposure monitoring, to obtain necessary equipment such as respirators, to produce written compliance programs, to design, procure, and install engineering controls, to implement training programs, and to evaluate products with respect to required labelling. OSHA believes that the dates set in this standard should be adequate in all but unusual circumstances.

If the time period for meeting any of these startup dates cannot be met because of technical difficulties, employers are entitled to petition the Assistant Secretary for a temporary variance under Section 6(b)(6)(A) of the Act. Based on its evaluation of the feasibility of the standard as discussed above, however, OSHA does not anticipate that many employers will need to use this variance mechanism.

Startup Dates

OSHA believes that expeditious action by employers to achieve compliance with the provision of this standard is warranted. Employees under the current standard are being exposed to EtO at concentrations that present a significant risk of adverse health effects. Compliance with the excursion limit will further reduce total EtO dose, and therefore the risk, to which employees are presently being exposed under the existing rule.

The information provided to OSHA clearly indicates that, with few exceptions, affected employers can be reasonably expected to be able to install feasible engineering controls that would bring their workplaces into compliance with the final standard's excursion limit within 6-months from the effective date of this standard.

Available engineering controls combined with good work practices, such as simply vacating the sterilizer area for 10–15 minutes after opening the sterilizer door after cycle completion, provide a readily available means for employers to comply with this standard in the time-frame specified.

Compliance with the other requirements of the standard within ninety (90) days of the effective date also is believed by OSHA to be appropriate. In response to the requirements set forth in OSHA's 1984 EtO standard, EtO employer have already instituted programs regarding training, compliance plans, respirators, exposure monitoring and work practices, recordkeeping, signs and labels, and regulated areas. Thus, compliance with new burdens imposed by adoption of the excursion limit within the periods specified is believed to be reasonable and appropriate.

VI. State Plan Applicability

Twenty-four states and U.S. territories have their own OSHA-approved occupational safety and health plans. These states and territories are: Alaska, Arizona, California, Connecticut (for state and local government employees only), Hawaii, Indiana, Iowa, Kentucky, Maryland, Michigan, Minnesota, Nevada, New Mexico, North Carolina, Oregon, Puerto Rico, South Carolina, Tennessee, Utah, Vermont, Virginia, Virgin Islands, Washington, and Wyoming. These states and territories are to adopt a standard comparable to that of OSHA's within 6 months of the effective data of the Federal rule.

VII. Authority

This document was prepared under the direction of John A. Pendergrass, Assistant Secretary of Labor for Occupational Safety and Health, U.S. Department of Labor, 200 Constitution Avenue, NW., Washington, DC 20210.

Pursuant to sections 4, 6(b), 8(c) and 8(g)(2) of the Occupational Safety and Health Act (29 U.S.C. 653, 655, 657), 29 CFR 1910.1047 is hereby amended as set forth below.

List of Subjects in 29 CFR Part 1910

Ethylene oxide, Occupational Safety and Health, Chemicals, Cancer, Health, Risk assessment.

Signed at Washington, DC, this 31st day of March, 1988.

John A. Pendergrass,

Assistant Secretary of Labor.

Part 1910 of Title 29 of the Code of Federal Regulations is amended as set forth below:

PART 1910—[AMENDED]

1. The authority citation for Subpart Z of 29 CFR Part 1910 continues, in pertinent part, to read as follows:

Authority: Secs. 6 and 8, Occupational Safety and Health Act, 29 U.S.C. 655, 657, Secretary of Labor's Orders Nos. 12–71 (36 FR 8754), 8–76 (41 FR 25059), or 9–83 (48 FR 35736), as applicable; and 29 CFR Part 1911.

* * * * *

Sections 1910.1045 and 1910.1047 also issued under 29 U.S.C. 653.

2. Paragraphs (a)(2), (c), (d)(1)(i), (d)(1)(ii), (d)(4), (d)(7)(ii), (e)(1), (f)(1)(i), (f)(1)(ii), (f)(2)(i), (f)(2)(iv), (g)(1)(iii), (j)(1)(ii) introductory text, and (j)(3)(i) of § 1910.1047 are revised, (d)(6) and (m)(1) are redesignated as (d)(6)(i) and (m)(1)(i), and new paragraphs (d)(2)(iii), (d)(3)(iv), (d)(6)(ii), (m)(1)(ii) and

(m)(2)(iii) are added to § 1910.1047 to read as follows:

§ 1910.1047 Ethylene oxide.

(a) * * *

(2) This section does not apply to the processing, use, or handling of products containing EtO where objective data are reasonably relied upon that demonstrate that the product is not capable of releasing EtO in airborne concentrations at or above the action level, and may not reasonably be foreseen to release EtO in excess of the excursion limit, under the expected conditions of processing, use, or handling that will cause the greatest possible release.

* * * * *

(c) *Permissible exposure limits*—(1) *8-hour time weighted average (TWA).* The employer shall ensure that no employee is exposed to an airborne concentration of EtO in excess of one (1) part EtO per million parts of air (1 ppm) as an 8-hour time-weighted average (8-hour TWA).

(2) *Excursion limit.* The employer shall ensure that no employee is exposed to an airborne concentration of EtO in excess of 5 parts of EtO per million parts of air (5 ppm) as averaged over a sampling period of fifteen (15) minutes.

(d) * * *

(1) * * *

(i) Determinations of employee exposure shall be made from breathing zone air samples that are representative of the 8-hour TWA and 15-minute short-term exposures of each employee.

(ii) Representative 8-hour TWA employee exposure shall be determined on the basis of one or more samples representing full-shift exposure for each shift for each job classification in each work area. Representative 15-minute short-term employee exposures shall be determined on the basis of one or more samples representing 15-minute exposures associated with operations that are most likely to produce exposures above the excursion limit for each shift for each job classification in each work area.

* * * * *

(2) * * *

(iii) Where the employer has previously monitored for the excursion limit and the monitoring satisfies all other requirements of this sections, the employer may rely on such earlier monitoring results to satisfy the requirements of paragraph (d)(2)(i) of this section.

(3) * * *

(iv) If the monitoring required by paragraph (d)(2)(i) of this section reveals employee exposure above the 15 minute excursion limit, the employer shall repeat such monitoring for each such employee at least every 3 months, and more often as necessary to evaluate exposure the employee's short-term exposures.

(4) *Termination of monitoring.* (i) If the initial monitoring required by paragraph (d)(2)(i) of this section reveals employee exposure to be below the action level, the employer may discontinue TWA monitoring for those employees whose exposures are represented by the initial monitoring.

(ii) If the periodic monitoring required by paragraph (d)(3) of this section reveals that employee exposures, as indicated by at least two consecutive measurements taken at least 7 days apart, are below the action level, the employer may discontinue TWA monitoring for those employees whose exposures are represented by such monitoring.

(iii) If the initial monitoring required by paragraph (d)(2)(1) of this section reveals employee exposure to be at or below the excursion limit, the employer may discontinue excursion limit monitoring for those employees whose exposures are represented by the initial monitoring.

(iv) If the periodic monitoring required by paragraph (d)(3) of this section reveals that employee exposures, as indicated by at least two consecutive measurements taken at least 7 days apart, are at or below the excursion limit, the employer may discontinue excursion limit monitoring for those employees whose exposures are represented by such monitoring.

* * * * *

(6) * * *

(i) * * *

(ii) Monitoring shall be accurate, to a confidence level of 95 percent, to within plus or minus 35 percent for airborne concentrations of EtO at the excursion limit.

(7) * * *

(i) * * *

(ii) The written notification required by paragraph (d)(7)(i) of this section shall contain the corrective action being taken by the employer to reduce employee exposure to or below the TWA and/or excursion limit, wherever monitoring results indicated that the TWA and/or excursion limit has been exceeded.

(e) *Regulated areas.* (1) The employer shall establish a regulated area wherever occupational exposure to airborne concentrations of EtO may exceed the TWA or wherever the EtO concentration exceeds or can reasonably be expected to exceed the excursion limit.

* * * * *

(f) * * *

(1) * * *

(i) The employer shall institute engineering controls and work practices to reduce and maintain employee exposure to or below the TWA and to or below the excursion limit, except to the extent that such controls are not feasible.

(ii) Wherever the feasible engineering controls and work practices that can be instituted are not sufficient to reduce employee exposure to or below the TWA and to or below the excursion limit, the employer shall use them to reduce employee exposure to the lowest levels achievable by these controls and shall supplement them by the use of respiratory protection that complies with the requirements of paragraph (g) of this section.

* * * * *

(2) *Compliance program.* (i) Where the TWA or excursion limit is exceeded, the employer shall establish and implement a written program to reduce exposure to or below the TWA and to or below the excursion limit by means of engineering and work practice controls, as required by paragraph (f)(1) of this section, and by the use of respiratory protection where required or permitted under this section.

* * * * *

(iv) The employer shall not implement a schedule of employee rotation as a means of compliance with the TWA or excursion limit.

(g) * * *

(1) * * *

(iii) In work situations where feasible engineering and work practice controls are not yet sufficient to reduce exposure to or below the TWA or excursion limit; and

* * * * *

(j) * * *

(1) * * *

(ii) The employer shall ensure that precautionary labels are affixed to all containers of EtO whose contents are capable of causing employee exposure at or above the action level or whose contents may reasonably be foreseen to cause employee exposure above the excursion limit, and that the labels remain affixed when the containers of EtO leave the workplace. For the purpose of this paragraph, reaction vessels, storage tanks, and pipes or piping systems are not considered to be containers. The labels shall comply with the requirements of 29 CFR 1910.1200(f) of OSHA's Hazard Communication

standard, and shall include the following legend:

* * * * *

(3) * * *

(i) The employer shall provide employees who are potentially exposed to EtO at or above the action level or above the excursion limit with information and training on EtO at the time of initial assignment and at least annually thereafter.

* * * * *

(m) * * *

(1) * * *

(ii) The requirements in the amended paragraphs in this section which pertain only to or are triggered by the excursion limit shall become effective June 6, 1988.

(2) * * *

(iii) Compliance with the excursion limit requirements in this section shall be by September 6, 1988, except that implementation of engineering controls specified for compliance with the excursion limit shall be by December 6, 1988.

* * * * *

[FR Doc. 88-7397 Filed 4-4-88; 12:00 pm]

BILLING CODE 4510-26-M

federal register

Wednesday
April 6, 1988

Part V

Department of Transportation

Coast Guard

46 CFR Ch. 1

Dry Cargo Ship Subdivision and Damage Stability; Advance Notice of Proposed Rulemaking

DEPARTMENT OF TRANSPORTATION

Coast Guard

46 CFR Ch. I

[CGD 87-094]

Dry Cargo Ship Subdivision and Damage Stability Regulations

AGENCY: Coast Guard, DOT.

ACTION: Advance notice of proposed rulemaking.

SUMMARY: The Coast Guard is considering regulations to require new, oceangoing, foreign and domestic dry cargo ships greater than 330 feet (100 meters) in length and of 500 gross tons or over entering U.S. ports to meet a minimum standard of subdivision and damage stability. At the present time there are no requirements for cargo ships, which may carry sizeable quantities of hazardous materials in packages, to be designed to remain afloat without capsizing after sustaining even minor damage which may occur as a result of a collision or grounding. This advance notice provides a preliminary draft of the proposal for public comment. These draft regulations represent a commitment by the United States to expedite implementation of a standard approved by the Sub-Committee on Stability and Load Lines and Fishing Vessels Safety (SLF) of the International Maritime Organization (IMO) in anticipation that the Maritime Safety Committee (MSC) will approve the Circular that implements this standard. The standard is outlined in Annex 2 of SLF 32/21, the report of the Sub-Committee. It has been forwarded to the MSC of the IMO, for adoption as an amendment to the International Convention for the Safety of Life at Sea, 1974 (1974 SOLAS). It is anticipated that these draft regulations will become effective concurrently with the international standard.

Because of the paramount marine safety issues involved, and consistent with the recommendation of the SLF Sub-Committee, the United States intends to implement the provisions of Annex 2 of SLF 32/21 at the earliest possible date consistent with international application. In the unlikely event that the MSC fails to adopt these standards, it will be necessary to reconsider the application of these draft regulations. In particular, to be effective and in order to ensure a uniform level of safety to the U.S. ports and the surrounding environments, the Coast Guard will consider a phased in application of the draft regulations to existing dry cargo ships entering U.S. waters. Most existing U.S. flag dry cargo ships are expected to meet the draft regulations without modification.

DATES: Comments on this advance notice must be received on or before January 3, 1989.

ADDRESSES: Comments should be mailed to Commandant (G-CMC/21) (CGD 87-094), U.S. Coast Guard, Washington, DC 20593-0001. The comments and materials referenced in this notice will be available for examination and copying between 8 a.m. and 4 p.m., Monday through Friday, except holidays, at the Marine Safety Council (G-CMC/21), Room 2110, Coast Guard Headquarters, 2100 Second Street SW., Washington, DC 20593-0001. Comments may also be hand delivered to this address.

FOR FURTHER INFORMATION CONTACT: Mr. J.S. Spencer, Office of Marine Safety, Security, and Environmental Protection (G-MTH-3/13), Room 1308, U.S. Coast Guard Headquarters, Washington, DC 20593-0001, PH: (202) 267-2988.

SUPPLEMENTARY INFORMATION: The public is invited to participate in this advance notice of proposed rulemaking by submitting written views, data, or arguments. Persons submitting comments should include their names and addresses, identify this notice as CGD 87-094, give the specific sections of the proposal to which their comments apply, and give reasons for the comments. If acknowledgement of receipt of a comment is desired, a stamped self-addressed postcard or envelope should be enclosed. No public hearing is planned, but one may be held if written requests for a hearing are received and it is determined that the opportunity to make oral presentation will aid the rulemaking process.

An analysis of the economic effects of this proposal along with an analysis of its technical content has been done. The purpose of this advance notice is to solicit comments on the technical merits of the proposal, its safety and environmental benefits, and its probable economic effect. Reference numbers in the preamble text refer to the Section "I. References Cited," at the end of the preamble. Comments from the maritime community and any other interested parties are requested. All comments received will be considered in preparing a Notice of Proposed Rulemaking.

Drafting Information

The principal persons involved in the drafting of this proposal are LT Randall R. Gilbert, Project Manager, and LCDR Joseph P. Brusseau, Staff, Office of Marine Safety, Security, and Environmental Protection; and LCDR Don M. Wrye, Project Attorney, Office of the Chief Counsel.

A. Introduction

Subdivision is the partitioning of a ship's internal volume into watertight compartments. Its purpose is to limit the quantity of water which may enter the ship following accidental hull damage or internal piping failure. Damage stability is the ability of a ship to avoid capsizing following accidental flooding. If uncontrolled flooding occurs without adequate subdivision and damage stability, the loss of the ship is virtually certain. Many disasters could possibly have been avoided if the ships had been subdivided and many others did not become disasters because the ships were subdivided. Casualties which result in capsizing or sinking typically involve loss of life, loss of the ship and its cargo, and release of quantities of oil and toxic chemicals into the environment. A recent study of casualty statistics [1] shows that as many as 37 percent of Roll-on/Roll-off (RO-RO) dry cargo ships were total losses following a collision. This is more than twice the rate for similar ships having some degree of subdivision in their cargo holds. This loss of life and property can be reduced if adequate subdivision and damage stability is provided in the design of all dry cargo ships.

Samuel Johnson, the 18th Century English author and critic, summed up the perils of the sea by observing,

> Being in a ship is being in a jail with the chance of being drowned.

It took more than a century of lost ships and mariners before his countryman, Samuel Plimsoll, succeeded in gaining agreement on a standard to limit the overloading of ships. Today the Plimsoll Mark, or Load Line, is firmly established among the standards of ship safety which have since emerged through international deliberations and treaties. These standards include structural adequacy, stability, fire protection, lifesaving equipment, and radio communications aboard all merchant ships.

For dry cargo ships there are not yet any domestic requirements, or internationally adopted agreements for dealing with the most common peril of the sea—flooding of the hull. Roughly 100 million dollars may be spent to build a ship which will take to sea a crew of up to thirty, and will carry 50 to 100 million dollars in goods as cargo, but which will sink if even a single, small opening is made in the hull below the waterline. Although the ship and cargo may be insured, there can be no

justification for the lives lost, the huge sums spent on inquiries and litigation, the pollution of the environment, the interruption of vital transportation services, the disruption of regular port activities and all their associated costs to society. In most cases, well-placed, watertight bulkheads can substantially reduce these effects because the ship would not be lost.

Flooding may be caused by a wide variety of circumstances. The draft regulations will not prevent those circumstances, which have already been addressed to a great degree in other domestic and international regulations. Instead, they will improve maritime safety by requiring ship design practices that reduce the consequences of any flooding that may occur.

These technical standards will impact on nearly everyone in the marine industry. Therefore this notice is addressed particularly to each of the following groups:

Ship Owners and Operators: The draft regulations should be useful when purchasing or chartering a ship in that the safety of the ship will be increased.

Ship Designers: The draft Regulations should ensure a proper subdivision index and adequate level of safety against flooding. International standards for dry cargo ships have been in the making for over 27 years. Since the draft regulations implement a standard that has been agreed to and will soon be adopted internationally, designers can be confident that some other standard will not make a new design obsolete and that their designs will remain competitive with the international fleet.

Ship Masters, Officers, and Crew: The draft regulations increase the likelihood that ships and their crews will survive accidental damage resulting in flooding, which occasionally occurs in this hazardous occupation.

Port Authorities and The Public: By improving the survivability of ships, the draft regulations would reduce the likelihood that ports and waterways will be obstructed by a collision or grounding. They would reduce the probability of disruption of vital transportation services. They would also reduce the threat to the surrounding environment from pollution by fuel oil or hazardous chemicals following a casualty.

National and International Shipping Interests: Maritime commerce is an inherently international activity, so the improved maritime safety sought by these draft regulations is in the best interests of all those who send their fortunes to sea in ships.

Marine Underwriters, Chambers, Unions, Brokers, and Classification Societies: The draft regulations will provide a tool for risk assessment and management.

Other Administrations and Flag States: The draft regulations for subdivision and damage stability will require new, oceangoing, dry cargo ships of every flag entering U.S. ports to comply with them.

Search and Rescue Organizations: The draft regulations will increase the probability of detection of survivors in a casualty by reducing the probability of sinking following flooding.

B. Background and History

1. The Problem

There are a number of circumstances by which a ship's hull may be opened to the sea and flooded. These include:

- Collision with another ship or ice
- Striking a shoal, pier, or other fixed object
- Structural failure of the hull
- Breaching of a hatch or hull closure due either to negligence or to structural failure
- Internal seawater piping system failure
- Firefighting water
- Terrorism or sabotage
- Warfare

Collisions, rammings, and groundings account for 40% of ship casualties. Recent studies [2,3,4] have shown that about four percent of ships will be involved in a collision each year.

It is a simple fact that, in the absence of adequate subdivision, unchecked flooding will eventually sink even the largest ship. A hole no bigger than a dinner plate can cause flooding so rapid that even prompt action by the crew may not save a poorly subdivided ship. Capsizing, which virtually rules out a means of escape, may occur within minutes after flooding begins.[5,6] In the words of Marshall Meek, former deputy chairman of "British Maritime Technology;"

> It should be clearly understood that the concept of a ship capsizing rapidly before the personnel can get off is new and constitutes the fundamental difference between ro/ros and all conventional ships from time immemorial.[7]

Watertight subdivision bulkheads are a built-in, passive defense intended to confine flooding. When flooding water is confined by bulkheads, the damaged portion of the ship is isolated. Properly located subdivision bulkheads are intended to provide the undamaged part of the ship with sufficient buoyancy and stability to remain afloat without capsizing. The restricted time available to abandon ship has a very profound affect in terms of human survival. One study found that in incidents which involved sinking within minutes, 86% of personnel on board perished.[6] In almost every case of accidental flooding, the properly subdivided ship remains the crew's best hope for survival. In those cases where the ship is so grievously damaged that it cannot be saved, subdivision and damage stability give the crew enough time to use their lifesaving equipment and abandon ship in an orderly fashion.

Although the value of subdivision has long been recognized, there is still no U.S. requirement or internationally required standard for subdividing dry cargo ships. For a variety of reasons, many existing ships satisfy or nearly satisfy the draft regulations, and many ship designers, owners, and operators routinely incorporate subdivision as a matter of professional pride and sound business practice. The long-established rules of construction did not envision the open cargo holds of today's RO-RO ships. These rules have not been updated, principally because the classification societies have been looking to the governments of the world for initiative in this area.

2. Casualties

Casualty information has been gathered from a number of sources, primarily from existing published papers and analyses based on the Lloyd's Shipping Information Service-Lloyd's Register returns, Det norske Veritas (DnV), and the compilations of the International Maritime Organization.

The following are capsule descriptions of various casualties directly and indirectly related to subdivision that affected lives and property inside and outside the shipping industry.

MONT LOUIS, a 5486 ton deadweight French RO-RO, was hit by the RO-RO car-passenger ferry OLAU BRITANNIA off Ostende, Belgium in August 1984. After withdrawal of the passenger ferry's bow, the MONT LOUIS capsized and sank within minutes. This sinking caused much controversy after it was announced that some of the MONT LOUIS' cargo was spent low grade radioactive material. Fortunately, the sinking occurred in only 43 feet of water, so the cargo could be recovered.

HERALD OF FREE ENTERPRISE, a 7951 gross ton British RO-RO car ferry designed to carry many passengers, capsized just outside Zeebrugge, Belgium in March 1987 after water rushed into the vehicle deck through open bow doors. Because of the large expense of open deck which flooded, the capsizing was rapid and left no time to abandon ship. At least 193 people

perished. Although the draft regulations would not apply to this ship, this casualty illustrates the danger of large, open decks near the waterline and the absolute necessity of maintaining watertight closures.

EDMUND FITZGERALD, a 26,000 ton deadweight U.S. Great Lakes bulk carrier, foundered in a severe November 1975 Lake Superior storm. Typical of Great Lakes ships before the advent of the 1986 U.S. regulations requiring tight transverse bulkheads, it was fitted with nontight screen bulkheads between the three holds. Once hold flooding began, it was progressive; the end was so quick that no distress calls were issued and all hands went down with the ship.

MARIEVA, a 3953 gross ton Greek general cargo ship, developed leaks in hold Number 3 and sank off Bajaia in February 1984. When water in the hold reached sea level, the crew abandoned ship. The investigation found that the sinking was due to hull cracks in the hold.

LAGODA BEACH, a 4350 gross ton Greek general cargo ship, developed a leak in hold Number 1 and eventually sank at Lat.13°50′ N., Long. 49°15′ E. in November 1983. The investigation board found that the sinking was caused by pipes that were badly stowed and continuously striking the hull in hold Number 1.

Increasingly, packaged dangerous goods are being shipped around the world. The potential for serious environmental damage is high when a ship carrying such goods is sunk. Every effort should be made to protect dangerous cargoes after accidents. The following cargo casualties are intended to demonstrate the potential for catastrophe if a ship carrying similar cargoes were to capsize or sink.

ARIADNE, a 24,198 ton deadweight Panamanian bulk carrier, ran aground departing Mogadishu, Somalia in August 1985. Of the 600 containers on board, 118 were loaded with hazardous and toxic chemicals such as xylene, toluene, acetone, tetraethyl lead, and calcium carbide. During the forty days it took to clean up the damage, many inhabitants had to be evacuated from the port and environs.

CASON, a 9191 gross ton Panamanian cargo ship, grounded and burned off Cape Finesterre, Spain in December 1987. Approximately twenty percent of the cargo included toxic and explosive chemicals such as pure sodium, aniline oil, and ethane. Besides claiming the lives of 23 crew members, the thick black smoke billowing from the wreck caused an estimated evacuation of 20,000 people from the nearby Spanish coast.

Adequate subdivision and damage stability can give the crew of a stricken ship time to abandon it in an orderly fashion.

PACBARONESS, a 26,681 ton deadweight Liberian bulk carrier, was hit by the pure car carrier ATLANTIC WING off Point Conception, California in September 1987. Struck at a bulkhead between holds four and five, the ship began to sink, but slowly enough to allow the crew to abandon ship to the car carrier. For nearly ten hours the ship lay with the stern awash. Some of the crew even reboarded the vessel and attempted to save it. Unfortunately, the ship was eventually lost, apparently due to slow progressive leakage into the machinery spaces.

Given all the different types of serious accidents that occur to ships, which types of ships suffer the most serious accidents? Det norske Veritas (DnV) has investigated this question for vessels classed by their society between 1978 and 1983.[8] From Figure 1 below it can be seen that dry cargo ships, which make up the biggest portion of the world's fleet, suffer the most serious accidents per year per 1000 ships.

BILLING CODE 4910-14-M

Figure 1

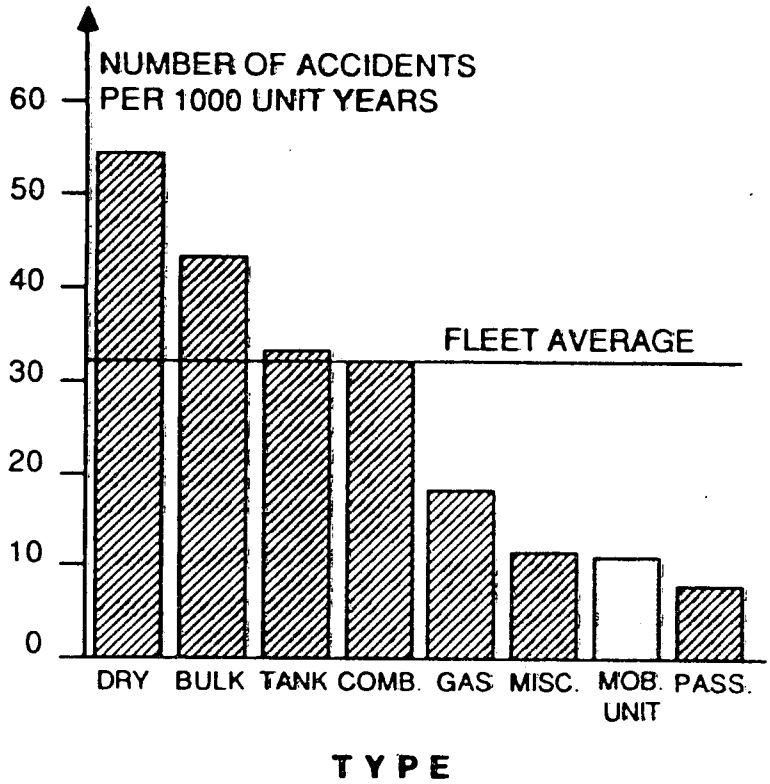

Figure 1. Number Of Serious Accidents Per 1000 Unit-Years Between 1978-1983 For DnV Fleet Over 100 GRT.

BILLING CODE 4910-14-C

On average, collisions and groundings account for between forty and fifty percent of the world fleet's total losses.[9] In terms of numbers the general risk of serious collision alone (i.e. pentration of the hull below the waterline to ships is about four to five a year per one thousand ships.[10] To evaluate the risk of collision and to assess the survival capability of different types of dry cargo ships, DnV in the same study referenced earlier analyzed 616 collisions for ships classed in their society. The results of their study, given in Table 1, show that passenger/cargo ferries, RO-ROs, and general cargo ships have the lowest collision survival capabilities.

TABLE 1. COLLISION SURVIVAL CAPABILITY FOR VARIOUS SHIP TYPES

Shiptype	n	x	Survival percent
Bulk Carrier	20	6	70.0
General	110	67	39.1
RO/RO	9	6	33.3
Pass./Cargo/Ferry	2	2	0.00
Container	5	0	100.0
Other	3	0	100.0
Total	149	81	45.6

n=Number Of Collisions With Water Ingress
x=Number Of Non Survivals With Water Ingress

RO-ROs form a unique and interesting subset to the family of dry cargo ships. Beginning in the late 1940s and early 1950s, the roll-on, roll-off principle has become a popular, permanent, and growing segment of the dry cargo fleet. For the shipper, the RO-RO ship offers a number of advantages over traditional cargo ships, notably cargo handling speed. As the name implies, wheeled cargo can be driven straight on board at one port and off at another port shortly after the ship docks.

Although RO-ROs have been a commercial success, concern about their safety has been expressed ever since the first RO-ROs were introduced. This concern continues to the present as indicated by the "International Conference on RO-RO Safety and Vulnerability: The Way Ahead," held in the United Kingdom last year. A number of potential problem areas make these vessels unique, such as a lack of full breadth transverse bulkheads, large cargo access doors near the waterline, low freeboards to the cargo access doors, and cargo stowage and securing.[11]

Compared to the world fleet average, the study showed that total losses as a result of collision were much higher for RO-ROs (9% world fleet vs. 25% RO-RO). The study also noted that 70% of all RO-RO total losses due to collision resulted in loss of life and that 60% were reported to have capsized or sunk following collision in less than ten minutes! Quoting a prominent British naval architect,

> Most accidents to ships are unusual, but for a RO-RO ferry to capsize after an accident is not unusual.[7]

The point to be made is not that RO-RO ships sink or suffer serious accidents more often than other ships, but that they do so for different reasons.

With regard to collisions and the phenomenon of rapid capsizing and sinking, an interesting study cited by Galloway[5] was carried out by a Dutch shipyard, which believed there was a need to investigate the subdivision and damage stability of RO-ROs. The ship used in their studies was a 183.2 meter, 23,500 ton deadweight RO-RO. Among the conclusions reached is that RO-ROs which are not subdivided are susceptible to capsizing and sinking when progressive flooding takes place and that sinking is rapid when water reaches and accumulates on decks. In one damage case:

> The study found that a five meter square hole effecting the middle hold, wing tank ventilator duct and, indirectly, two lower holds, caused capsize in about five minutes.

A further study by a major classification society, also cited by Galloway,[5] concluded that a RO-RO vessel with no subdivision in the tween decks will sink in about two and one-half minutes when the standard damage defined by the SOLAS 1960 Convention is applied.

The subdivision of RO-ROs need not be this poor. Some designers have traded away subdivisions in their desire for open decks. Others[12] have found ways to provide both open decks and adequate subdivision. In fact, some RO-ROs have been built which not only comply with the draft regulations, but in fact significantly exceed them.

Any discussion of shipping casualties, especially when the goal is to improve safety of shipping, must address the inexorable and pervasive loss of dry cargo ships. Unfortunately the facts most associated with marine casualties are the sinkings of passenger ships where the loss in human terms is high. Almost everybody has heard of the TITANIC and LUSITANIA and more recently the DONA PAZ, ADMIRAL NAKHIMOV, and the HERALD OF FREE ENTERPRISE. However, how many have heard of the ARIADNE or the CASON mentioned earlier? The tragic loss in human terms of the occasional and well publicized casualty obscures the routine, almost every-other-day loss of ships. On average, between 140 and 150 total losses occur per year to ships of 1600 gross tons and over or 500 gross tons and over when loss of life occurs.[13] The total losses in terms of ships alone tend to obscure the fact that quite often tremendous amounts of cargo are also lost, which in the public mind might popularly include refrigerators and television sets. The "what" quite realistically might also include acetone cyanohydrin (an industrial chemical), aluminum phosphide (a pesticide), tetraethyl lead (a gasoline additive), methyl isocyanate (an industrial chemical associated with the infamous Bhopal tragedy), or any in a nearly endless number of extremely toxic materials that can be packaged and transported on board ship.

Dry cargo ships constitute a majority of the world fleet and suffer the highest number of serious casualties both in absolute numbers and per ship per year. By virtue of the number of vessels and number of casualties, dry cargo ships form the largest and potentially most dangerous segment of unregulated ships from a subdivision and damage stability standpoint.

By every indication, the past year has been a very disastrous one for ships. Discounting the well publicized passenger ship disasters, 1987 claimed some large and notable cargo ships including:[14]

- TESTAROSSA, a large Philippine bulk carrier
- CATHAY SEATRADE, a large Taiwanese bulk carrier
- TUXPAN, 8,350 gross ton Mexican containership
- HANJIN INCHEON, 17,679 gross ton Korean containership
- CUMBERLANDE, 21,384 gross ton British bulk carrier
- TOPKAPI S., 36,900 gross ton Turkish bulk carrier

Without a change in the way ships are designed and operated, the casualty rate in the future can be expected to remain the same.

3. Existing Regulations and Policies

Some measure of subdivision and damage stability is required by regulations for every type of U.S. flag ship except ocean-going dry cargo ships. The regulations require subdivision and damage stability for large and small passenger ships, petroleum product and crude oil tankships, gas carriers, hazardous chemical carriers, mobile offshore drilling units, school ships, oceanographic research ships, nuclear powered ships, and Great Lakes dry bulk cargo ships. The overriding reason for the regulations is safety. Of primary

concern in each case is the personal safety of the passengers and crew. Second is a concern for the safety of the world environment and all that this implies for the safety of the public.

Until recently, most U.S. flag dry cargo ships, including RO-RO ships, were built under a subsidy or mortgage insurance program administered by the U.S. Maritime Administration (MARAD), which required them to be subdivided. Many foreign flag dry cargo ships do not have subdivided cargo spaces. The draft regulations are necessary to ensure that subdivision and damage stability standards are maintained at a uniformly high level for the entire world fleet serving United States ports.

Figure 2 summarizes U.S. and international subdivision and damage stability standards. The gap where dry cargo ships are concerned is conspicuous. The draft regulations would fill this gap.

BILLING CODE 4910-14-M

Figure 2

CURRENT REQUIREMENTS FOR SUBDIVISION AND DAMAGE STABILITY

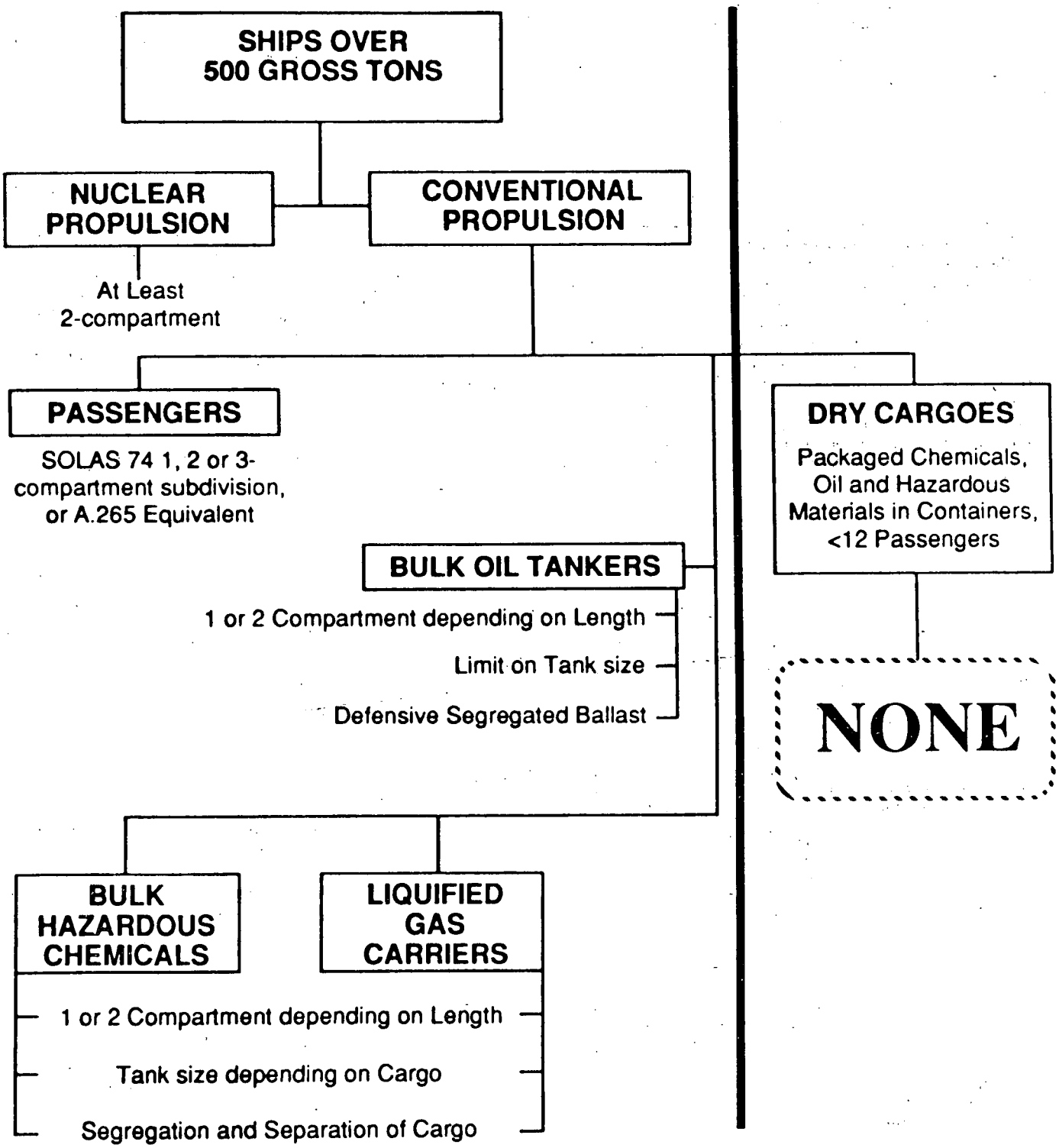

BILLING CODE 4910-14-C

4. History

Various measures of flooding protection have been employed in ships for several hundred years. Almost 700 years ago, Marco Polo reported that Chinese ships were fitted with wooden bulkheads, expertly crafted and joined to be watertight. For centuries sail ships carried, and occasionally used, what were known as "collision mats." These mats were applied externally to the hull in the event of damage to limit flooding until repairs could be made. Both of these safety measures were worth the cost to the ship owner because they were of direct benefit.

Shipping changed dramatically as it moved from the 19th to the 20th century. After the loss of the TITANIC in 1912, the first international passenger ship subdivision requirements were formed at the 1913 Safety of Life at Sea (SOLAS) Convention. These, and changes made in 1929, rated ship subdivision according to the number of adjacent spaces which could be flooded and the amount of reserve buoyance or freeboard after such flooding. This approach neglected to consider the accompanying loss of stability, so that the ship might be calculated to remain afloat but would be unstable and subject to capsizing.

The losses of the MOHAWK and MORRO CASTLE in the early 1930's spurred the U.S. Congress to investigate the state of the U.S. Merchant Marine. Even before the investigation report was published Congress passed the Merchant Marine Act of 1936, requiring that the U.S. Merchant Marine be composed of the "best equipped, safest, and most suitable" type ships.

Senate Report 184, published in 1937 following the SS MOHAWK and SS MORRO CASTLE casualties, was:

> A comprehensive set of rules for the construction of all classes of new vessels concerning structural strength, loading, watertight subdivision, stability under all conditions, * * *, and such other features as may be necessary to insure properly equipped and safe ships.[15]

Awareness of the potential use of merchant ships during hostilities led the U.S. Maritime Commission to require all ships submitted for approval, including cargo ships, to meet the standards of Senate Report 184. Experiences during World War II bore out the need for the subdivision and damage stability features required by that report.

In the 1948 SOLAS Convention, the deficiencies of the 1929 Convention were corrected by the addition of regulations requiring damage stability for passenger ships. There were, however, no requirements for cargo ship subdivision or damage stability.

In 1957 the Commandant of the Coast Guard assembled an industry task force to consider subdivision requirements for cargo ships. This task force met for the next three years, and in 1960 one of its recommendations was international adoption of the one compartment damage stability criterion for cargo ships.

By the time of the 1960 SOLAS Conference many people recognized that a more rational measure of safety was not the number of flooded compartments with which a ship could survive, but the extent of hull damage it could survive. The U.S. delegation presented a hull damage survivability proposal to the conference. At about the same time, papers by Wendel,[16, 17] Krappinger,[18] and Varges [19] in Germany recognized that the extent and longitudinal location of damage varied and that a better assessment of safety could be obtained by treating the damage probabilistically.

The 1960 Conferees could not agree to alter the basic concepts of the 1948 SOLAS Passenger Ship Subdivision Regulations. However, they did agree that the subject required further study and that these studies should be initiated by the International Maritime Consultative Organization (IMCO), which is now the International Maritime Organization (IMO). At the same time, they agreed that IMCO;

> Should, at an early date, initiate studies on the extent to which it would be reasonable and practicable to apply subdivision and damage stability requirements to cargo ships, * * * having as its aim the formulation of such international standards as may appear necessary.[20]

IMCO had been formed only a year earlier and one of its very first assignments concerned cargo ship subdivision. In the deliberations that followed over the years, IMCO concentrated on passenger ships to the exclusion of cargo ships.

Concern for safety of the ports and prevention of pollution caused the SOLAS 1960 Convention to require any ship propelled by nuclear power to be capable of surviving the flooding of any two adjacent compartments. This precedent for requiring subdivision in order to protect the environment was echoed by the Convention for the Prevention of Pollution from Ships 1973, as modified by the Protocol of 1978 (MARPOL 73/78).

In 1965, MARAD issued Design Letter No. 3. This updated construction standards for federally financed ships, requiring all cargo ships to meet a one compartment subdivision. Because most U.S. flag dry cargo ships built since World War II have been built with U.S. Government financing, most have also met Design Letter No. 3. For this reason, until recently, there has been very little incentive to develop domestic regulations addressing subdivision of dry cargo ships.

The 1966 Load Line Convention permits a reduced freeboard for cargo ships provided they have the ability, when at full load draft, to withstand the flooding of an empty compartment.

In January 1967, at the urging of the United States, IMCO formed a special committee to develop codes of construction for cargo ships carrying chemicals or liquified gases in bulk. As this was being deliberated, in March 1967, the TORREY CANYON grounded off the Scilly Isles and spilled massive quantities of oil on the shores of the English Channel. The work program of the new international technical group was therefore extended to design measures to prevent and limit the release of oil as well as chemicals. The subdivision measures which emerged from these deliberations placed limits on the size of cargo tanks in order to control possible outflow of polluting cargoes. Highly dangerous substances must be stowed well clear of the ship sides. The ability to survive flooding of the machinery spaces and adjacent compartments was required when it was recognized that the entire ship could be lost with all its hazardous cargo if damaged in this "Achilles heel." Oil tankers and product carriers of certain sizes are required to be designed with segregated tanks for clean ballast water, and those tanks must be arranged to serve as "defensive spaces." MARPOL 73/78 incorporates these design restrictions to ensure containment of polluting and hazardous cargoes.

IMCO considered some non-probabilistic subdivision procedures, and eventually adopted, in 1973, a probabilistic procedure for passenger ships that provides a direct and logical means of evaluating relevant factors and frees designers from arbitrary restrictions on bulkhead locations.[21] Those regulations, Resolution A.265(VIII), were put forward as an equivalent to the existing "classic" regulations. Shortly afterwards, this equivalence was formalized by its adoption at the International Convention for the Safety of Life at Sea, 1974 (1974 SOLAS). The draft regulations for dry cargo ships have the same approach as Resolution A.265(VIII).

The subject of dry cargo ship subdivision and damage stability remained on the work program of the

Sub-Committee on Stability and Load Lines and on Fishing Vessels Safety (SLF). But for the next eleven years there was no concerted effort to finalize a standard.

In 1985, the IMO Maritime Safety Committee (MSC) decided that;

> There is a compelling need for the development of standards for subdivision and damage stability for dry cargo ships and such standards should be based on the probabilistic method. The Committee expressed the hope that the Sub-Committee on Stability and Load Lines and on Fishing Vessels Safety could develop the standards in a relatively short time.[22]

In 1987, the SLF Sub-Committee approved such a standard [23] and proposed that it be published as an MSC advisory circular in 1988, with the request that countries apply the standard and submit results to the IMO as early as possible. The Sub-Committee considered it work complete and removed this item from its work program.

The Coast Guard has honored the request of the Sub-Committee, and has completed significant research, applying Annex 2 of SLF 32/21 to both new and existing U.S. and foreign ship designs. The results demonstrate that the standards approved by the Sub-Committee indeed have a bearing on marine safety and should be implemented. The draft regulations in this advance notice are substantially an embodiment of Annex 2 of SLF 32/21.

The international discussions and negotiations which contributed to the development of Annex 2 of SLF 32/21 were extraordinarily protracted. When they began, in 1960, the United States was a strong proponent of a deterministic approach because such an approach would have been simple and easy to implement. The U.S. eventually agreed to developing a probabilistic standard because it was both a rational approach to subdivision and it held some promise of eventual acceptance by the IMO. Annex 2 of SLF 32/21 is actually a compromise between a deterministic and a probabilistic approach to subdivision. It is probabilistic in approach, but deterministic in application. After 27 years in the making, it has finally been approved by the cognizant technical experts at the IMO and removed from the SLF Sub-Committee work program as a complete project.

The SLF Sub-Committee is the foremost international body of experts on ship stability and subdivision, representing all the major maritime nations of the world. The decisions of the SLF Sub-Committee are based on thorough research, experience, and in-depth understanding of naval architecture and ship safety. The United States is represented on the SLF Sub-Committee by the U.S. Coast Guard, which prepares for the sessions by holding public meetings at which experts from all aspects of the marine community are encouraged to present their views.

The United States was represented during the development of the standard in Annex 2 of SLF 32/21 by qualified members of the Coast Guard's maritime safety technical staff. These persons receive their authority to attend each international meeting from the Department of State. Official reports of these meeting were directed though the Commandant of the Coast Guard to the Secretary of State.

The longstanding objectives of the Coast Guard in the International Maritime Organization are: In a cost effective manner,

- To enhance the overall safety of all shipping,
- To ensure the safety of U.S. citizens and cargoes embarked in all ships,
- To prevent deterioration of the environment by pollution from ships,
- To promote the efficient and safe operation of U.S. ports and waterways, and
- To eliminate safety as an economic factor in international trade by promoting international safety standards.

C. Immediate Need

In a growing number of ship losses, the cargoes are found to menace human health either directly or through the food chain by pollution of the sea. A prominent example is the capsize of the MONT LOUIS off Belgium in August 1984 with containers of nuclear waste aboard. Fortunately, the MONT LOUIS was in shallow water and its cargo could be salved.

Failing to regulate dry cargo ships now leaves us with a glaring inconsistency. (Fig. 2) The crews of these ships are not afforded the same protections they would have if they had embarked in most other types of ships, and the public is not afforded the same protection from safety and environmental hazards. The International Maritime Dangerous Goods Code deals with the packaging, marking, stowing and separation of toxic and other hazardous substances. It does not, however, take any notice of the stability and subdivision of the ship in which these materials are carried. The stability and subdivision of ships carrying dangerous cargoes in bulk are regulated, but ships carrying the same total amount in small parcels do not have to meet similar requirements.

Annex 2 of SLF 32/21 is the dry cargo ship subdivision and damage stability standard currently under consideration by the Maritime Safety Committee of the IMO. 1974 SOLAS, to which the United States is a party, was developed by the IMO. By approving Annex 2 of SLF 32/21 as an amendment to the 1974 SOLAS, and by following the tacit amendment procedure under Article VIII, it will become binding on U.S. dry cargo ships in 1991. It is the Coast Guard's intention that the final rules stemming from this advance notice will become effective at the same time.

Since 1961, the United States has refrained from implementing domestic subdivision regulations for dry cargo ships in the expectation that an international standard would be forthcoming. Ship designers repeatedly expressed their need for specific rules for subdivision and damage stability, especially for RO-RO ships.[24] Yet it was during these same years that ships like the MONT LOUIS were lost.

The subject of subdivision and damage stabilty is indeed complex, and standards addressing the subject should be carefully considered. It should also be considered that an incident such as the MONT LOUIS off U.S. shores can be expected to produce a public outcry of major proportions. A subsequent investigation which discloses that measures which might have mitigated the event have been in deliberation for 27 years can hardly be expected to be sympathetic to the complexity of the subject.

D. Maritime Industry Support

There has been considerable discussion in the maritime industry over the years concerning the merits of various subdivision schemes.

It was a group made up of industry leaders who conducted the investigations demanded by the Congress following the ship disasters of the early 1930's and who recommended the criteria adopted in Senate Report 184 ("MORRO CASTLE" and "MOHAWK" Investigations) and in the Merchant Marine Act of 1936. From that date to the present, the Maritime Administration and its predecessor Commission have required ships built with federal subsidy funds to satisfy a one-compartment standard.

Between 1957 and 1960, it was an industry task force assembled by the Commandant of the Coast Guard that recommended international adoption of the one compartment criterion for cargo ships. Since then, in the regular meetings

of the SOLAS Working Groups, industry members have sustained the U.S. Representative's continued advancement of the one compartment criterion.

In 1969, a special industry group was convened by the National Academy of Sciences. This group was concerned with the effect of regulations on U.S. competition in the shipbuilding field. Despite their concern, they endorsed the Maritime Administration criterion.

In 1981 the Technical and Research Steering Committee of the Society of Naval Architects and Marine Engineers (SNAME), undertook a review of the one compartment standard. After three years of deliberation SNAME again endorsed this criterion, concluding that it was technically feasible and desirable "provided such a standard was imposed on an international basis."[25]

The U.S. has not been alone in appreciating the value of subdivision for dry cargo ships. In recent years, prominent members of the British and European shipping industries have also advocated improved standards. The efforts of the Royal Institution of Naval Architecture, especially following the loss of the EUROPEAN GATEWAY and the HERALD OF FREE ENTERPRISE have been invaluable in gaining approval of SLF 32/21.

Shipbuilders and designers do want and need an internationally agreed upon standard of subdivision for dry cargo ships. The following quote from Senior Montes of Astilleros Espanoles SA, expresses the concerns of the ship design and building community.

> As shipbuilders, we have been attending these meetings (RO-RO Conference, 1983), for many years in the hope that by the next one, the national authorities, international associations, and even classification societies, will have put in black and white some rules and criterion about the RO-RO compartment and about damage stability. Unfortunately, we have not yet achieved any clear criteria regarding international regulations.[24]

Since the second decade of this century the classification societies have had, as a part of their class rules, recommendations for subdivision. These are "rules of thumb" suggesting the number of watertight transverse bulkheads to be installed, based primarily on the length of the ship. Det norske Veritas has improved considerably on the rules of thumb by instituting the "SC" notation which addresses the survival capability of dry cargo ships. It is apparent, however, that the classification societies will not, by themselves, make subdivision mandatory.[27]

E. Cost of Compliance and Effect on Ship Design, Construction, and Operation

The Coast Guard believes that the draft regulations represent a technically feasible and practical approach to subdivision and damage stability of dry cargo ships. However, the Coast Guard has some concerns for the economic effects the draft regulations may have on the maritime industry. Some shipbuilders and ship owners, may be adversely affected by the cost of complying with the draft regulations. This has been taken into consideration, and the impact of the draft regulations on the shipping industry has been investigated. It is expected that the impact of the draft regulations will be greater for foreign flag ships than for U.S. ships because traditional U.S. practice has been to provide subdivision while non-U.S. practice has not. It is anticipated that much information will continue to come to light as the maritime industry applies the draft regulations and gains experience during this rulemaking period.

The investigation consisted of:

- An analysis of the subdivision of different types of cargo ships, using assistance from private contractors and other U.S. government agencies. To the extent possible the ship data represents both U.S. and non-U.S. designers, builders, and owners, and
- A determination of the costs associated with modifying the designs of ships with an inadequate degree of subdivision, including the short term impact on intitial construction and the long term impact on operating a ship.

The materials referenced in this document and certain non-proprietary materials associated with the studies addressing compliance costs, are included in the docket file, and are available for inspection and copying as indicated under "ADDRESSES."

The Coast Guard conducted an analysis of the state of subdivision of a variety of existing ships. To the extent possible, these included dry cargo ships designed, built, and operated by both U.S. and non-U.S. parties. There were five major sources of ship data for the subdivision analysis: Data obtained from consultants, information submitted by IMO Member governments,[28] information volunteered by independent designers and ship owners, information submitted to the Coast Guard as part of the Certification process, and information found in professional publications.

For the analysis, the ships were categorized as bulk carriers, containerships, combination container RO-ROs, deep sea RO-ROs, pure car carriers, rail ferries, and general cargo ships. They were divided into three different length categories. For each ship, both the Required Subdivision Index (R) and the Attained Subdivision Index (A) were calculated. The results of these calculations are summarized in Table 2. Where "A" is shown as greater than "R", the ship complies with the draft regulations, and no further analysis is necessary. In each category of Table 2, such ships are listed above the dotted line. Where "A" is shown as less than "R", the ship does not comply as is, and it is listed below the dotted line. If it were to be built with the draft regulations in mind, some design modifications would be necessary to make it comply.

BILLING CODE 4910-14-M

Table 2. Collation Matrix

Vessel Type \ Vessel Length	100 - 149 Meters	150 - 199 Meters	200 - 249 Meters	Greater than 250 Meters
BULK CARRIERS	No. 31 - A=0.574 (R=0.519)	No. 3 - A=0.644 (R=0.553) No. 4 - A=0.617 (R=0.564) No. 5 - A=0.605 (R=0.570) No. 11 - A=0.600 (R=0.545) No. 20 - A=0.630 (R=0.570) No. 28 - A=0.766 (R=0.536) Ship L - A=0.648 (R=0.553)	No. 21 - A=0.775 (R=0.597)	
			No. 6 - A=0.591 (R=0.615)	
CONTAINER SHIPS	No. 9 - A=0.634 (R=0.504) No. 32 - A=0.530 (R=0.529) Ship F - A=0.588 (R=0.530)	Ship T - A=0.675 (R=0.582) Ship U - A=0.664 (R=0.583)	No. 35 - A=0.622 (R=0.600)	Ship V - A=0.972 (R=0.634)
	No. 24 - A=0.380 (R=0.474) No. 25 - A=0.376 (R=0.487) No. 26 - A=0.444 (R=0.506)			
COMBINATION RO-RO CONTAINER SHIPS			Ship Z - A=0.709 (R=0.618)	Ship D - A=0.958 (R=0.659)
DEEP SEA RO-ROs		No. 10 - A=0.582 (R=0.539) Ship B - A=0.937 (R=0.590)	Ship X - A=0.634 (R=0.597) Ship W - A=0.633 (R=0.607)	Ship R - A=0.763 (R=0.662)
	No. 15 - A=0.059 (R=0.523) No. 33 - A=0.226 (R=0.531)	No. 19 - A=0.432 (R=0.556) Ship O - A=0.520 (R=0.572) Ship Y - A=0.560 (R=0.573)	No. 36 - A=0.266 (R=0.607)	
PURE CAR CARRIERS		Ship A - A=0.330 (R=0.550)		
GENERAL CARGO SHIPS	No. 8 - A=0.597 (R=0.503) No. 13 - A=0.583 (R=0.466) No. 16 - A=0.730 (R=0.528) No. 23 - A=0.477 (R=0.471) No. 27 - A=0.800 (R=0.512) Ship I - A=0.959 (R=0.513) Ship J - A=0.759 (R=0.709)	No. 2 - A=0.673 (R=0.547) No. 17 - A=0.713 (R=0.543) No. 34 - A=0.688 (R=0.532) Ship K - A=0.899 (R=0.760)		
	No. 14 - A=0.215 (R=0.468)	No. 18 - A=0.259 (R=0.544)		

Note: Numbered ships are the results of SLF 32/3/8 Collation of the multi-nation study of annex 2 to SLF 31/32
Lettered ships are the results of the study described above.

BILLING CODE 4910-14-C

The probabilistic method of the draft regulations offers a designer great flexibility in the placement of watertight boundaries to increase the Attained Subdivision Index. There is not a unique "right" answer, so the approach taken was to evaluate the costs of a number of subdivision "building blocks" a designer might use, and then choose those that give a reasonable and straightforward solution. The emphasis was on modifications of existing designs. It is likely that a more efficient solution can be found for a ship designed from the keel up with subdivision and damage stability in mind.

The costs of a variety of items which are likely to be employed was gathered from three independent sources: A report prepared by Ernst & Whinney for MARAD in 1979,[29] a paper presented to SNAME in 1979,[30] and proprietary data from naval architects.

Table 3 contains data extracted from the first two sources. It has been adjusted for the variation in the purchasing power of the U.S. dollar using the consumer price index recommended for economic analyses. Prices will vary between different locations and different manufacturers. It can be seen that an additional bulkhead for a containership will cost $328,000. For a RO–RO ship, it will cost $248,000 to install two watertight ramps instead of non-watertight ramps.

There are other increases involved with the long term operating costs. Bulkheads increase the ship weight, reduce the cargo deadweight capacity, and increase fuel cost. Watertight closures may increase operational cargo handling time and maintenance costs. In conducting the studies the Coast Guard has accounted for these increases to the extent possible.

TABLE 3

Equipment	Dimensions	1978 E$	1987 $
Fixed ramp.	40m × 7m	$90,000	$150,000.
Hinged water-tight ramp.	40m × 7m	165,000	274,000.
Moveable WT ramp cover.	40m × 7m	145,000	241,000.
Bulkhead door.	4.25m × 3.5m	30,000	50,000.
Fixed bulk-head.	not given	218,000	328,000.
Stern door.	11.5m × 6.15m.	60,000	100,000.
Bow door	6.15m × 8.50m.	55,000	92,000.
Side door	4.25m × 4.25m.	45,000	75,000.

On a case by case basis, the Coast Guard considered various design modifications that might be suitable to bring the ships into compliance. Some of the ship designs, submitted to the SLF Sub-Committee for collation and study could only be looked at in a cursory way. The following paragraphs summarize the results from both the detailed and cursory analyses.

Ten *bulk carriers* were considered in the study. Nine have satisfied the requirements of the draft regulations. One large bulk carrier design from the SLF collation (No. 6 in Table 2) has an Attained Subdivision Index just marginally less than is required. Such a small difference in the index can usually be corrected with a slight change to the intact stability required GM curve dismissing the need for either a design or operational change. Since no changes in any of the designs would be necessary the economic impact of the draft regulations on these ships is considered to be nil. Bulk carriers are generally limited in the amount they can carry by the weight of their cargo. It is highly desirable for these ships to obtain a Type "B"/reduced 60% freeboard assignment so they can carry more weight. To obtain the assignment, they are required under the International Load Line Convention to be designed to remain afloat with any one of their compartments flooded. This supports the conclusion that if a ship has been designed and built to meet a subdivision standard, it generally will have a satisfactory Attained Subdivision Index and comply with the draft regulations. All of these bulk carrier designs have enough bulkheads to satisfy the minimum number of bulkheads recommended by the major classification societies.

Ten *containerships* were considered. This is another group of ships that have traditionally been transversely subdivided and show a high degree of subdivision, some of them by a significant margin. Four of them were designed to meet the requirements of the MARAD Design Letter No. 3 and all of them had enough bulkheads to satisfy the minimum number of bulkheads recommendation of the classification societies. Three of the designs submitted as a part of the SLF collation study, all of them less than 150 meters, had a lesser Attained Subdivision Index than required. One of them (No. 24 in Table 2) did not have the minimum number of bulkheads recommended by the major classification societies, and the other two (Nos. 25 and 26 in Table 2) appear to have a problem of a combination of either poor bulkhead spacing, marginal intact stability, low freeboard or low downflooding angle. Because significant structure is in place on Lift-on/Lift-off designs, the addition of a bulkhead in a design like No. 24 is feasible and would add no more than 1% to the initial construction cost of the ship. For the other two designs, Nos. 25 and 26, the Attained Subdivision Indices are just marginally less than is required, so the small differences can usually be corrected with a slight change to the intact stability required GM curve. It is also feasible in the construction of a new ship to subdivide the wing tanks in two places. This design modification would add a small amount of steel and cause some piping changes, but the construction cost would account for no more than 1% of the original ship cost.

Two *combination container RO-RO* ships were considered. Both of them showed compliance with the draft regulations. Both were designed to meet the requirements of MARAD Design Letter No. 3. No changes in these designs are necessary, so the economic impact of the draft regulations on designs of this type of ship is nil. These ships are a highly competitive hybrid RO-RO designs, purposely built to carry a wide variety of the worlds cargoes, and both have a high degree of subdivision.

Ten *deep-sea RO-RO* ships were considered. As a type category, this group showed the greatest total variation between the ship designs in the amount of the Attained Subdivision Index. Four of the ships complied with the draft regulations, one of them (ship B in Table 2) by a significant margin. Ship B had been modified to comply with the requirements of MARAD Design Letter No. 3. Ships R, W and X are highly competitive ships, designed with flooding protection from their conception using the same probabilistic methods of these draft regulations. They are clear examples supporting the conclusion that once subdivision is required for all cargo ships designers will find the most efficient and economical way to make it work.

Six of the *deep-sea RO-ROs*, did not comply with the draft regulations, three of them (Nos. 15, 33, and 36 in Table 2) had significantly less of an Attained Subdivision Index than required. A cursory look at those submitted for the

SLF collation revealed the following observations. No. 36 is the type of design that would require the most changes to comply. It is an example of a ship that had not been designed or built with subdivision in mind. To serve the same purpose, the new design would have a larger beam, have wing tanks and more freeboard, and perhaps three watertight bulkheads with cargo doors on the main deck. The cost difference for this ship was not estimated. No. 15 is a design that might be made to comply by subdividing the main deck in two places and making sure the freeboard deck was watertight. This modification would require three large watertight cargo doors and a watertight bulkhead. The difference in the initial construction cost might be about $250,000.; about two percent of a $12 million dollar ship. The operational cargo handling time would be increased only slightly because of having to manuever through and around the doors and bulkheads. No. 19 is a very similar design to Ship Y. It appears to have one less subdivision bulkhead on the freeboard deck. It appears that both designs might be modified sufficiently by adding watertight cargo doors on the main deck above the forward engine room bulkhead. In general there might need to be an increase in the intact stability and downflooding angle. Some of the modifications may appear to be relatively significant for these designs, but the increase in flooding protection, particularly for design Nos. 15, 33 and 36, would more than justify the need.

One *pure car carrier* was considered. It was designed and built overseas but operated under the U.S. flag. Although it has the minimum number of bulkheads recommended by the major classification societies, it does not comply with the draft regulations as built. However, when the vent ducts are made watertight at the freeboard deck and the access doors are made watertight up to the next higher deck, there is enough of an increase in the Attained Subdivision Index to comply with the draft regulations. Making both of these modifications was estimated to be less than $100,000 or less than 1% of a new ship's initial construction cost. These modifications would not require any operational change. This supports the conclusion that a slight modification, made at the beginning of the design process to take subdivision into account, can produce an acceptable level of subdivision for very little extra cost.

Thirteen *general cargo ships* were considered. Eleven complied with the draft regulations. Ships I, J, and K were designed to meet the requirements of MARAD Design Letter No. 3, and all of them had the minimum number of bulkheads recommended by the major classification societies. Two of the ships submitted for the SLF collation (Nos. 14 and 18) did not comply with the draft regulations. Both of the designs had very long unsubdivided cargo holds and one did not have enough bulkheads to satisfy the minimum number recommended by the major classification societies. The easiest modification to the designs, but not always the most practical for a ship that must be capable of carrying very long cargoes, is to add another bulkhead and divide the cargo space into three holds. The other possibility is to widen the wing tanks slightly, subdivide them again by adding another wing bulkhead, and raise the freeboard slightly to make up for the slight loss in cargo hold volume. These design modifications are estimated to be between 1% and 4% of the initial construction cost of the ship. More information on these ships would be needed in order to give a more accurate estimation. This type of ship is by far the most abundant in the worlds fleet. If subdivision is required for these ships, it will not have a significant economic impact for most. For those that need to carry especially large cargoes, the probabilistic method of subdivision, contained in these draft regulations, will offer designers the greatest flexibility to put flooding protection into their ship designs.

Conclusions

1. Most modern cargo ship designs comply with the draft regulations. In particular, those that are transversely subdivided with the minimum number of transverse watertight bulkheads recommended by the classification societies, would require little or no modification. Those few exceptions which have the right number of bulkheads but still do not comply, either have poor bulkhead spacing, marginal intact stability, low freeboard or low downflooding angle. Most current designs could be made to comply with modifications averaging about 2% of initial construction costs, but not exceeding 4%, and some design changes would have a slight operational impact on the ship.

2. If the design satisfies the requirements of either the MARAD Design Letter No. 3, or Type "B"/ reduced 60% freeboard requirements for load line assignment, or the DnV Rules for "SC" notation, it will comply with these draft regulations and no design modifications will be necesssary.

3. Some ships that were built with exceptionally large and unsubdivided cargo spaces, such as some RO-RO designs, were apparently designed with little or no regard for subdivision. Their Attained Subdivision Indices were so low that they can not comply with the draft regulations without a change in the design. However, there are many RO-RO designs which not only comply with the draft regulations, but in fact exceed the Attained Subdivision Index of traditionally subdivided ships with only Lift-on/Lift-off capabilities.

F. Request for Data, Information, and Comments

Considerable effort was expended in developing the draft regulations and the supporting casualty information, statistical data, sample calculations, and computer program. The Coast Guard recognizes, however, that the public is likely to have important questions and information that should be addressed in the rulemaking process. In particular, the Coast Guard would like members of the concerned public to address a number of specific questions.

Question 1. What are the required and attained subdivision indices for specific ships presently operating or being designed? While the required and attained indices have been calculated for a number of ships, a broader sample of these important indices will provide a better comparison between the draft regulations and current design practice. Results from the application of the draft regulations will be most useful if they are submitted in a simple format including ship particulars, general arrangements, watertight boundaries, external and internal openings with related closing devices, and a damage stability analysis summary. Appendix 3 contains information and guidance for assistance in preparing these calculations.

Question 2. What is the likely economic impact of the draft regulations on your business? Members of the shipping industry are in the best position to estimate the costs and economic effects of the draft regulations. Answers to this question will be most useful if they address individual items expected to be affected, such as: reduction in cargo capacity and resulting lost revenues, increased loading and off loading time and the associated costs, additional labor costs, etc.

Question 3. What would be the impact on the revenues and commerce within the jurisdictions of the various port authorities due to the obstruction to navigation that might be caused by a sunk or capsized wreck in a major waterway?

Question 4. Would insurance underwriters be willing to reduce premiums for ships which meet or exceed the proposed attained subdivision indices? Some marine underwriters have expressed a desire to contribute to the development of sound ship systems as well as a need for well founded safety information.[30] The draft regulations provide an index for the safety of ships with respect to flooding survivability.

Question 5. Likewise, would insurers to cargo be willing to reduce premiums for cargoes shipped in ships which meet or exceed the proposed attained subdivision indices?

Question 6. Should the attained and required subdivision indices be listed on the face of a ship's Certificate of Inspection or similar document? This information would provide a ready indication of the degree of subdivision with respect to the required index.

Question 7. Which passages of the draft regulations require clarification or explanation? The Coast Guard is considering publishing explanatory notes to the draft regulations.

Question 8. Are there circumstances under which the draft regulations should apply to existing ships as well as new ships? The draft regulations have been written in the belief that the IMO Maritime Safety Committee (MSC) will approve Annex 2 of SLF 32/21. When this happens the tacit amendment procedures of SOLAS 74 will bring Annex 2 of SLF 32/21 into effect in 1991. In that case, the draft regulations will apply to new ships only. Over a period of time the entire world fleet would comply with the requirements as new vessels replace older ones. This is the usual way new international requirements affecting design are applied. However, if Annex 2 of SLF 32/21 is not adopted by the Maritime Safety Committee, and the U.S. adopts the draft regulations for new ships only, then the United States could become a repository for the world's most decrepit ships, because new foreign flag ships not meeting the proposed standard would be excluded from entering U.S. ports. In this event the Coast Guard would have to consider applying the draft regulations to both new and existing ships. The Coast Guard believes that such action, if adopted, would have minimum effect on U.S. ships, since most of them meet a one compartment standard of subdivision and can therefore probably meet the draft regulations.

Question 9. What is the likely economic impact of the draft regulations on your business if they applied to existing ships as well as to new ones? Answers to this question will be most useful if they address separately items such as; the cost of any alterations necessary to comply with the draft regulations, the lost revenues associated with the time to make alterations, reduction in cargo capacity, and resulting lost revenues.

Question 10. If it becomes necessary to make the draft regulations applicable to existing ships, what would be an appropriate phase-in period for them? The phase-in period would have to be long enough to avoid unnecessary disruption of shipping but short enough to provide incentive to upgrade vessels calling at U.S. ports. Comments from operators and shipyards concerning the time necessary to make any required alterations are also solicited.

G. Preliminary Economic Analysis and Certification

Although the draft regulations, if adopted, are considered to be non major under Executive Order 12291, they are considered to be significant under the Department of Transportation regulatory policies and procedures (44 FR 11034; February 26, 1979). The draft regulations are considered significant because of the high level of interest in the international community. As explained earlier in this ANPRM, the international standard approved by the SLF Sub-Committee in Annex 2 of SLF 32/21 has been forwarded to the MSC of the IMO and will be discussed at IMO shortly. The draft regulations are considered non-major because the economic data available at this time does not warrant a conclusion that the program is likely to result in an annual effect on the economy of $100 million or more, a major increase in costs or prices for the affected industry or public, or have significant adverse effects on competition, employment, or other market-place factors. One of the purposes of this ANPRM is to generate additional cost data with which, if warranted, a full regulatory evaluation can be made.

The draft regulations, if adopted, would impact owners and operators of large, ocean/going vessels. None of these entities can be classified as a small entity. Therefore, the Coast Guard certifies at this time that, if adopted, the draft regulations will not have a significant economic impact on a substantial number of small entities.

Paperwork Reduction Act

The draft regulations do not increase the paperwork burden on the public. The only paperwork requirements involve vessel design plan development and submittal for review, which are similar to requirements already approved by the Office of Management and Budget (OMB).

Federalism

The draft regulations, if adopted, affect only large entities which own or operate vessels engaged in interstate or international commerce. This action has been analysed in accordance with the principles and criteria contained in Executive Order 12612, and it has been determined that the draft regulations do not have sufficient federalism implications to warrants the preparation of a Federalism Assessment.

H. Appendices

Annex 2 of SLF 32/21 has been referred to many times in this advance notice. Since information about the IMO work in this area may be helpful to those considering the text of the draft Rules for the Subdivision and Damage Stability of Dry Cargo Ships, the text of Annex 2 of SLF 32/21 is reproduced as Appendix 1.

The draft rules under consideration are reproduced as Appendix 2.

Appendix 3 contains information and guidance to render assistance in performing calculations.

I. References Cited

1. Sen, P. and Konstantinidis, C.; "A Time Simulation Approach to the Assessment of Damage Survivability of RO/RO Cargo Ships", presented at the Annual Meeting of SNAME, New York, NY, Nov 11–14, 1987.

2. Cashman, J.P., "Analysis of World Merchant Ship Losses 1967–75", Paper No. 2, Proceedings of The Second West European Conference on Marine Technology, Safety at Sea, May 1977.

3. Doerffer, J.W., "Safety at Sea Through Manoeuvring Standards," Symposium of the Operations of Large Ships, RINA and the Nautical Institute, London, March 1976.

4. Drager, H., "Cause Relationships of Collisions and Groundings", Det norske Veritas, Report No. 80–0295, March 1980.

5. Galloway, A.; "RO–RO's: The Problem Areas"; delivered at RO–RO 81, Hamburg, 2 July 1981.

6. Pyman, M.A.F. ., "Casualty Rates in Abandoning Ships at Sea", Trans. Royal Institution of Naval Architects (RINA), 1985.

7. Meek, M.; "Analysis: RO/RO Safety", Seatrade Business Review, Sept/Oct 1987.

8. Telle, J., "Safety of Dry Cargo Ships," DnV Paper No. 85 PO17, October 1985.

9. Jansson, B.O., "Safety of RO–RO Vessels—Casualty Statistics," RO–RO Conference, Hamburg, June 1981.

10. Tagg, R.D., "Damage Survivability of Cargo Ships," Northern California Section, SNAME, March 1982.

11. "IMO and RO–RO Safety," International Maritime Organization, May 1986.

12. Trans Consultants AB; "Survival Capability of General Cargo Ships",

submitted to the Maritime Safety Committee as Sweden MSC 51/Inf.3, 1984.

13. IMO; "Reports on Serious Casualties", 46/17 Jan 82, 48/20 Jan 83, 49/15 Jan 84, 50/15 Aug 84, 52/18 Nov 85, and 54/11 Jan 87.

14. Foy, D.B.; "Safety and 1987: Annual Review", from "Safety at Sea", Dec 1987.

15. Senate Report 184, "MORRO CASTLE" and "MOHAWK" Investigations, March 17, 1937.

16. Wendel, Kurt; "Probability to Survive a Damage", "Schiffstechnik', No. 36, 1960.

17. Wendel, Kurt; "The Evaluation of Subdivision", translated from the paper "Die Bewertung von Unterteilungen" from "Jahrbuch der Schiffbautechnischen Gesellschaft", 1961.

18. Krappinger, O.; "Stability Criteria", British Ship Research Association Translation No. 1506 from Forschungsch. Schiffstechnik, No. 9, 1962.

19. Varges, G.; "Water in the Ship", Schiffstechnik, No. 34, 1959.

20. International Conference on Safety of Life at Sea, 1960, Annex D, Recommendation 8.

21. IMCO Resolution A.265(VIII) adopted on 20 November 1973.

22. MSC 52/28, Report of the Maritime Safety Committee on its Fifty-Second Session, dated 26 February 1986.

23. SLF 32/21, Report to the Maritime Safety Committee, dated 25 September 1987.

24. Montes, A.; published discussion of a paper, "Damage Survivability of RO-RO Vessels" by R.D. Tagg, delivered at RO-RO 83.

25. Capt. Perry W. Nelson, USN (Ret), President, Society of Naval Architects and Marine Engineers in a letter dated 1 August 1985 to Admiral James S. Gracey, USCG, Commandant.

26. Lloyd's Register of Shipping, "Rules and Regulations for the Classification of Ships, 1987", paragraph 4.1.4.

27. Nordenstrom, N., Chairman of IACS Council, in a letter dated 14 February 1985 to C.L. French, President, Society of Naval Architects and Marine Engineers.

28. IMO; "Collation of the Multi-Nation Study of Annex 2 to SLF 32/21"; SLF 32/3/8, 30 April 1987.

29. Ernst &Whinney, "Cost Impact of U.S. Government Regulations on U.S. Flag Ocean Carriers," Washington, December 1979.

30. Argyriadis, D.A., et al, "Design and Construction of Modern RO-RO and Container Carriers," Trans., SNAME, 1979.

31. Danielsson, N.; "RO-RO Safety and Securing Lashings for Freight on Trailers", RO-RO Conference, Hamburg, June 1981.

March 2, 1988.

J.W. Kime,

Rear Admiral, U.S. Coast Guard, Chief, Office of Marine Safety, Security and Environmental Protection.

BILLING CODE 4910-14-M

APPENDIX 1

Annex 2 of SLF 32/21

SLF 32/21

ANNEX 2

DRAFT MSC CIRCULAR

SUBDIVISION AND DAMAGE STABILITY OF DRY CARGO SHIPS INCLUDING RO-RO SHIPS

1 The Organization in implementing recommendation 2 of resolution 1 adopted by the International Convention of the Safety of Life at Sea, 1974, developed a draft set of regulations on subdivision and damage stability of dry cargo ships, including ro-ro ships given in the Annex.

2 The Committee at its fifty-fifth session:

CONSIDERING the importance of a mandatory introduction of such regulations;

BEING AWARE of the difficulties to establish an acceptable level of safety in an area where little experience exists;

AGREED that these regulations should, in the future, amend the present SOLAS Convention;

URGES that the Administration during the period prior to the approval of the amendment use the regulations in the annex for the calculation of Attained Subdivision Index "A" on all new dry cargo ships over 100 m in length on a trial basis.

3 While there was agreement on the calculation of the Attained Subdivision Index "A", concern still exists as to whether the level of the Required Subdivision Index "R" is appropriate. This level is represented by the factors "C_1" and "C_2" in the formula for "R".

4 As the Committee intends to take a final decision not later than ..., Administrations are requested to submit to the Organization, as early as possible, results from the application of the Annex. By this procedure it is hoped to enable the Committee in the shortest possible period of time to finally agree on the subdivision index "R".

ANNEX

DRAFT REGULATIONS ON SUBDIVISION AND DAMAGE STABILITY OF DRY CARGO SHIPS, INCLUDING RO-RO SHIPS (BUT EXCLUDING THOSE SHIPS DEALT WITH BY OTHER DAMAGE STABILITY REGULATIONS IN IMO INSTRUMENTS)

Regulation 1

Application

1 The requirements in these regulations shall apply to new ships over 100 m in length (L_s) intended primarily for the carriage of dry cargoes, but shall exclude those ships already covered by other damage stability regulations in IMO instruments.

2 Any reference to regulations hereunder refer to the set of regulations contained in regulations 1 to 13.

3 The Administration may for a particular ship or group of ships accept alternative arrangements, if it is satisfied that at least the same degree of safety as represented by these regulations is achieved. Any Administration which allows such alternative arrangements shall communicate to the Organization particulars thereof.

Regulation 2

Definitions

For the purpose of these regulations, unless expressly provided otherwise:

1.1 a "subdivision load line" is a waterline used in determining the subdivision of the ship;

1.2 the "deepest subdivision load line" is the subdivision load line which corresponds to the summer draught to be assigned to the ship;

1.3 the "partial load line" is the light ship draught plus 60% of the difference between the light ship draught and deepest subdivision load line;

2.1 the "subdivision length of the ship" (L_s) is the greatest projected moulded length of that part of the ship at or below the deck or decks limiting the vertical extent of flooding;

2.2 the "mid-length" is the mid point of the subdivision length of the ship;

2.3 the "aft terminal" is the aft limit of the subdivision length;

2.4 the "forward terminal" is the forward limit of the subdivision length;

3 the "breadth" (B) is the greatest moulded breadth of the ship at mid-length at or below the deepest subdivision load line;

4 the "draught" (d) is the vertical distance from the moulded baseline at mid-length to the waterline in question;

5 the "permeability" ( ) of a space is the proportion of the immersed volume of that space which can be occupied by water.

Regulation 3

Required Subdivision Index "R"

1 These regulations are intended to provide ships with a minimum standard of subdivision.

2 The degree of subdivision to be provided shall be determined by the required Subdivision Index "R", as follows:

$R = (C_1 + C_2 L_s)^{1/3}$ where L_s is in metres

and

$$\left.\begin{aligned} C_1 &= 0 \\ C_2 &= 0.001 \end{aligned}\right\} *$$

Regulation 4

Attained Subdivision Index "A"

1 The attained Subdivision Index "A", calculated in accordance with this regulation, shall not be less than the required Subdivision Index "R", calculated in accordance with paragraph 2 of regulation 3.

---

* Reference is made to MSC/Circ...

2 The attained Subdivision Index "A" shall be calculated for the ship by the following formula:

$$A = 0.5A_L + 0.5A_p$$

where:

A_L is that part of the attained subdivision index for the ship obtained at the deepest subdivision load line,

A_p is that part of the attained subdivision index for the ship obtained at the partial load line,

In calculating A_L and A_p, level trim shall be used, except when inconsistent with the ship's operation.

For both A_L and A_p, the following summation shall be used:

$$A = \sum p_i s_i v_i$$

where:

i represents each compartment or group of compartments under consideration,

p_i accounts for the probability that only the compartment or group of compartments under consideration may be flooded,

s_i accounts for the probability of survival after flooding the compartment or group of compartments under consideration,

v_i accounts for the probability that only the compartment(s) under consideration are flooded within the assumed vertical extent of damage.

3 This summation covers only those cases of flooding, which contribute to the value of the attained Subdivision Index "A".

4 The summation indicated by the above formulae shall be taken over the ship's length for all cases of flooding in which a single compartment or two or more adjacent compartments are involved.

5 Wherever wing compartments are fitted, the summation indicated by the formula shall be taken over the ship's length for all cases of flooding in which only wing compartments are involved; and additionally, for all cases of simultaneous flooding of wing compartment(s) and adjacent inboard compartment(s), assuming a rectangular penetration which extends to the ship's centreline, but excludes damage to any centreline bulkhead.

6 The assumed vertical extent of damage is to extend from baseline upwards to any watertight horizontal subdivision above the waterline or higher. However, if a lesser extent will give a more severe result, such extent is to be assumed.

7 If pipes, ducts or tunnels are situated within assumed flooded compartments, arrangements are to be made to ensure that progressive flooding cannot thereby extend to compartments other than those assumed flooded.

8 In the flooding calculations carried out according to the Regulations, only one breach of the hull need be assumed.

Regulation 5

Calculation of the factor "p_i"

1 The factor "p_i" shall be calculated according to paragraph 1.1 as appropriate, using the following notations:

x_1 = the distance from the aft terminal of L_s to the foremost portion of the aft end of the compartment being considered;

x_2 = the distance from the aft terminal of L_s to the aftermost portion of the forward end of the compartment being considered;

$\xi 1 = x_1/L_s$

$\xi 2 = x_2/L_s$

$\xi = (\xi 1 + \xi 2)/2$

$\lambda = \xi 2 - \xi 1$

$\lambda' = 1 - 2\xi 1$, if $\xi \geq 0.5$

$\lambda' = 2\xi 2 - 1$, if $\xi < 0.5$

The maximum non-dimensional damage length,

$\lambda\ max = 48/L_s$, but not more than 0.24.

The assumed distribution density of damage location along the ship's length

$a = 0.4 + 1.6\ \xi$, but not more than 1.2

The assumed distribution function of damage location along the ship's length

$$F = 0.4 + (\xi - 0.5)\ (0.6 + 0.5a)$$

$$y = \lambda / \lambda max$$

$$p = \lambda max F_1$$

$$q = 0.4\ (\lambda max)^2\ F_2$$

$$F_1 = y^2 - \frac{1}{3}\ y^3 \qquad \text{if } y < 1$$

$$F_1 = y - \frac{1}{3} \qquad \text{otherwise}$$

$$F_2 = \frac{1}{3}\ y^3 - \frac{1}{12}\ y^4 \qquad \text{if } y < 1$$

$$F_2 = \frac{1}{2}\ y^2 - \frac{1}{3}\ y + \frac{1}{12} \qquad \text{otherwise}$$

1.1 The factor "p_i" is determined for each single compartment:

1.1.1 Where the compartment considered extends over the entire ship length, L_s:

$$p_i = 1$$

1.1.2 Where the aft limit of the compartment considered coincides with the aft terminal:

$$p_i = F + 0.5ap + q$$

1.1.3 Where the forward limit of the compartment considered coincides with the forward terminal:

$$p_i = 1 - F + 0.5ap$$

1.1.4 When both ends of the compartment considered are inside the aft and forward terminals of the ship length, L_s:

$$p_i = ap$$

1.1.5 In applying the formulae of paragraphs 1.1.2, 1.1.3 and 1.1.4, where the compartment considered extends over the "mid-length", these formulae values shall be reduced by an amount determined according to the formula for "q", in which F_2 is calculated taking y to be λ'/λ_{max}.

1.1.6 The factor "p_i" for a group of three or more adjacent compartments equals zero if the non-dimensional length of such a group minus the outer compartments is greater than λ max.

2 Wherever wing compartments are fitted, the "p_i" value for a wing compartment shall be obtained by multiplying the value as determined in paragraph 3 by the reduction factor "r" according to sub-paragraph 2.2, which represents the probability that the inboard spaces will not be flooded.

2.1 The "p_i" value for the case of simultaneous flooding of a wing and adjacent inboard compartment shall be obtained by using the formulae of paragraph 3, multiplied by the factor (1 - r).

2.2 The reduction factor "r" shall be determined by the following formulae:

For $\lambda \geq 0.2\ b/B$:

$$r = \frac{b}{B}\left(2.3 + \frac{0.08}{\lambda + 0.02}\right) + 0.1, \qquad \text{if } b/B \leq 0.2$$

$$r = \left(\frac{0.016}{\lambda + 0.02} + \frac{b}{B} + 0.36\right), \qquad \text{if } b/B > 0.2$$

For $\lambda < 0.2$ b/B the reduction factor "r" shall be determined by linear interpolation between

$r = 1$, for $\lambda = 0$

and

r = as above, for $\lambda = 0.2$ b/B

where:

b = the mean transverse distance in metres measured at right angles to the centreline at the subdivision load line between the shell and a plane through the outermost portion of and parallel to that part of the longitudinal bulkhead which extends between the longitudinal limits used in calculating the factor "p_i".

3 To evaluate "p_i" for compartments taken singly the formulae in paragraphs 3 and 4 shall be applied directly.

3.1 To evaluate the "p_i" values attributable to groups of compartments the following applies:

for compartments taken by pairs:

$p_i = p_{12} - p_1 - p_2$
$p_i = p_{23} - p_2 - p_3$, etc.

for compartments taken by groups of three:

$p_i = p_{123} - p_{12} - p_{23} + p_2$
$p_i = p_{234} - p_{23} - p_{34} + p_3$ etc.

for compartments taken by groups of four:

$p_i = p_{1234} - p_{123} - p_{234} + p_{23}$
$p_i = p_{2345} - p_{234} - p_{345} + p_{34}$, etc.

where:

p_{12}, p_{23}, p_{34}, etc.,
p_{123}, p_{234}, p_{345}, etc. and
p_{1234}, p_{2345}, p_{3456}, etc.

shall be calculated according to the formulae in paragraphs 1 and 2 for a single compartment whose non-dimensional length λ corresponds to that of a group consisting of the compartments indicated by the indices assigned to p.

Regulation 6
Calculation of factor "s_i"

1 The factor "s_i", shall be determined according to the following:

.1 $s_i = C\sqrt{0.5(GZmax)(Range)}$

with $C = 1$, if $\theta e \leq 25°$

$C = 0$, if $\theta e > 30°$

$C = \sqrt{\frac{30 - \theta e}{5}}$, otherwise

GZmax = maximum positive righting lever (m) within the range as given below but not more than 0.1 m

Range = range of positive righting levers beyond the angle of equilibrium (in degrees) but not more than 20°, however, the range shall be terminated at the angle where openings not capable of being closed weathertight are immersed.

θe = final equilibrium angle of heel (degrees)

.2 $s_i = 0$ where the final waterline taking into account sinkage, heel and trim, immerses the lower edge of openings through which progressive flooding may take place. However, if the compartments so flooded are taken into account in the calculations the requirements of this regulation shall be applied.

Regulation 7
Calculation of factor "v_i"

1 The probability factor "v_i" shall be calculated according to:

$$v_i = \frac{V - d}{Vmax - d}, \quad \text{but not more than 1}$$

However, if the uppermost horizontal subdivision in way of the damaged region is below Vmax, then $v_i = 1$

with $V_{max} = d + 0.056\, L_s \left(1 - \frac{L_s}{500}\right)$, but V_{max} is $(d + 7)$m when $L_s \geq 250$ m

where:

v_i = probability that the vertical extent of damage has a value V or less

V = assumed vertical extent of damage above baseline (m)

V_{max} = maximum vertical extent of damage above baseline (m)

Regulation 8

Permeability

For the purpose of the subdivision and damage stability calculations of the regulations, the permeability of each space or part of a space shall be as follows:

Spaces	Permeability
Appropriated to stores	0.60
Occupied by accommodation	0.95
Occupied by machinery	0.85
Void spaces	0.95
Dry cargo spaces	0.70
Intended for liquid	0 or 0.95*

Regulation 9

Stability information

1 The master of the ship shall be supplied with such reliable information as is necessary to enable him by rapid and simple means to obtain accurate guidance as to the stability of the ship under varying conditions of service. The information shall include:

.1 a curve of minimum operational metacentric height (GM) versus draught which assures compliance with the relevant intact stability requirements and the requirements of regulations 1 to 7,

* Whichever results in the more severe requirements.

alternatively a corresponding curve of the maximum allowable vertical centre of gravity (KG) versus draught, or with the equivalents of either of these curves;

.2 instructions concerning the operation of cross-flooding arrangements; and

.3 all other data and aids which might be necessary to maintain stability after damage.

2 There shall be permanently exhibited, for the guidance of the officer in charge of the ship, plans showing clearly for each deck and hold the boundaries of the watertight compartments, the openings therein with the means of closure and position of any controls thereof, and the arrangements for the correction of any list due to flooding. In addition, booklets containing the aforementioned information shall be made available to the officers of the ship.

3 In order to provide the information referred to in 1.1, the limiting GM (or KG) values to be used, if they have been determined from considerations related to the subdivision index, the limiting GM shall be varied linearly between the deepest subdivision load line and the partial load line. In such cases, for draughts below the partial load line if the minimum GM requirement at this draught results from the calculation of the subdivision index, then this GM value shall be assumed for lesser draughts, unless the intact stability requirements apply.

Regulation 10
Collision bulkhead

1 A collision bulkhead .....*

2 The "s_i" value calculated for all compartments forward of the collision bulkhead at the deepest subdivision loadline and assuming unlimited vertical extent of damage is not to be less than 1.

---

* To be inserted after having been considered by the Sub-Committee on Ship Design and Equipment.

BILLING CODE 4910-14-C

***

Appendix 2—Draft Rules for the Subdivision and Damage Stability of Dry Cargo Ships

§ XXX.200 Specific applicability.

This subpart applies to each new, oceangoing ship greater than 330 feet (100 meters) in length (L_s) and 500 gross tons or over intended primarily for the carriage of dry cargoes, including roll-on/roll-off ships.

§ XXX.205 Definitions.

(a) "Subdivision load line" means a waterline used in determining the subdivision of the ship.

(b) "Deepest subdivision load line" means the subdivision load line which corresponds to the summer draft to be assigned to the ship.

(c) "Partial load line" means the light ship draft plus 60% of the difference between the light ship draft and deepest subdivision load line.

(d) "Subdivision length of the ship" (L_s) is the greatest projected molded length in feet or meters of that part of the ship at or below the deck or decks limiting the vertical extent of flooding.

(e) "Mid-length" means the mid point of the subdivision length of the ship.

(f) "Aft terminal" means the after limit of the subdivision length of the ship.

(g) "Foward terminal" means the forward limit of the subdivision length of the ship.

(h) "Breadth" (B) is the greatest molded breadth of the ship in feet or meters at mid-length at or below the deepest subdivision load line;

(i) "Draft" (d) is the vertical distance in feet or meters from the molded baseline at mid-length to the waterline in question;

(j) "Permeability" of a space is the proportion of the immersed volume of that space which can be occupied by water.

(k) A "new" vessel is one

(1) for which the building contract is placed after (the effective date of the regulations); or

(2) in the absence of a building contract, the keel of which is laid or which is at a similar stage of construction after (a date six months past the effective date of the regulations); or

(3) the delivery of which is after (a date five years past the effective date of the regulations); or

(4) which has undergone a major conversion:

(i) for which the contract is placed after (the effective date of the regulations); or

(ii) in the absence of a contract, the construction work of which is begun after (a date six months past the effective date of the regulations); or

(iii) which is completed after (a date five years past the effective date of the regulations).

(l) An "existing" vessel is one which is not new.

§ XXX.207 Calculations.

(a) For each vessel to which this subpart applies, calculations of the required subdivision index "R" and the attained subdivision index "A" must be submitted to: Commanding Officer, Coast Guard Marine Safety Center, Washington, DC 20593-0001.

(b) For each vessel, the attained subdivison index "A" calculated in accordance with this subpart shall not be less than the required subdivision index "R".

§ XXX.210 Required Subdivision Index.

The Required Subdivision Index "R" shall be calculated for each vessel as follows:

$$R=(C_1+C_2 L_s)^{1/3}$$

where:

$C_1=0.0$

$C_2=0.0003048$ if L_s is in feet

$C_2=0.001$ if L_s is in meters

§ XXX.215 Attained Subdivision Index.

(a) The attained Subdivision Index "A" shall be calculated for each ship by the following formula:

$$A=0.5A_L+0.5A_p$$

Where:

A_L is that part of the attained subdivision index for the ship obtained at the deepest subdivision load line,

A_p is that part of the attained subdivision index for the ship obtained at the partial load line.

In calculating A_L and A_p, level trim shall be used, except when inconsistent with the ship's operation.

For both A_L and A_p, the following summation shall be used:

$$A_L, A_p=\Sigma p_i s_i h_i$$

where

i is an index representing each compartment or group of compartments under consideration,

P_i accounts for the probability that only the compartment(s) under consideration are flooded within the assumed longitudinal and transverse extent of damage,

s_i accounts for the probability of survival after flooding the compartment or group of compartments under consideration, and

h_i accounts for the probability that only the compartment(s) under consideration are flooded within the the assumed vertical extent of damage.

(b) The summation in paragraph (a) of this section should include only those cases of flooding which make a positive contribution to the value of the attained Subdivision Index "A".

(c) The summation in paragraph (a) of this section should include all possible cases of flooding along the ship's length in which a single compartment or two or more adjacent compartments are involved. Cases involving flooding in non-adjacent compartments need not be considered. Only one breach of the hull is to be assumed.

(d) Wherever wing compartments are fitted:

(1) The summation in paragraph (a) of this section shall be taken over the ship's length for all cases of flooding involving:

(i) Wing compartments only, and

(ii) Wing compartments together with the adjacent inboard compartments, assuming a rectangular penetration of damage to the centerline.

(2) The following cases should not be included in the summation:

(i) Those involving only inboard compartments without damage to adjacent outboard wing compartments; or

(ii) Those involving diagonally adjacent compartments having no common bulkhead; or

(iii) Those involving damage to the centerline bulkhead.

(e) The assumed vertical extent of damage extends from the molded baseline upwards to any watertight horizontal subdivision above the waterline. Within this extent, the damage case which gives the most severe result is to be assumed.

(f) If pipes, ducts or tunnels are situated within assumed flooded compartments, they are assumed to be damaged and flooded also. Arrangements are to be made to ensure that progressive flooding cannot thereby extend to compartments other than those assumed flooded.

§ XXX.220 The "p_i" Factor.

(a) The factor "p_i" shall be calculated for each single compartment as follows:

(1) Where the compartment considered extends over the entire ship length, L_s:

$$p_i=1$$

(2) Where the aft limit of the compartment considered coincides with the aft terminal:

$$p_i=F+0.5ag+q$$

(3) Where the forward limit of the compartment considered coincides with the forward terminal:

$$p_i=1-F+0.5ag$$

(4) When both ends of the compartment considered are inside the aft and forward terminals of the ship length, L_s:

$p_i = ag$

where, for the formulas in paragraphs (1), (2), (3), and (4) of this section;

x_1 = the distance in feet or meters from the aft terminal of L_s to the foremost portion of the aft end of the compartment being considered;

x_2 = the distance in feet or meters from the aft terminal of L_s to the aftermost portion of the forward end of the compartment being considered;

$E_1 = x_1/L_s$

$E_2 = x_1/L_s$

$E = (E_1 + E_2)/2$

$J = E_2 - E_1$

$J_1 = 1 - 2E_1$, if E is greater than or equal to 0.5

$J_1 = 2E_2 - 1$, if E is less than 0.5

$J_{max} = 157.44/L_s$, but not more than 0.24 if L_s is in feet.

$J_{max} = 48/L_s$, but not more than 0.24 if L_s is in meters.

$a = 0.4 + 1.6E$, but not more than 1.2

$F = 0.4 + (E - 0.5)(0.6 + 0.5a)$

$y = J/J_{max}$

$F1 = y^2 - 0.333y^3$ if y is less than 1

$F1 = y - 0.333$ otherwise

$g = J_{max}F_1$

$F2 = 0.333y^3 - 0.083y^4$ if y is less than 1

$F2 = 0.5y^2 - 0.333y + 0.083$ otherwise

$q = 0.4(J_{max})^2F_2$

(5) In applying the formulas of paragraphs (2), (3), and (4) of this section, where the compartment considered extends over the "mid-length" (that is, where J_1 is greater than 0), an amount "z" shall be subtracted from p_i.

where $z = 0.4(J_{max})^2F_2$

and, in calculating F_2, y shall be taken as $y = J_1/J_{max}$.

(6) Wherever wing compartments are fitted, the "p_i" value for a wing compartment shall be obtained by multiplying the value as determined in paragraphs (2), (3), or (4) of this section by the reduction factor "r" given in paragraph (b)(3) of this section.

(b) The factor "p_i" shall be calculated for each group of compartments as follows:

for compartments taken by pairs:

$p_i = p_{1\&2} - p_1 - p_2$

$p_i = p_{2\&3} - p_2 - p_3$ etc.

for compartments taken by groups of three:

$p_i = p_{1\&2\&3} - p_{1\&2} - p_{2\&3} + p_2$

$p_i = p_{2\&3\&4} - p_{2\&3} - p_{3\&4} + p_3$ etc.

for compartments taken by groups of four:

$p_i = p_{1\&2\&3\&4} - p_{1\&2\&3} - p_{2\&3\&4} + p_{2\&3}$

$p_i = p_{2\&3\&4\&5} - p_{2\&3\&4} - p_{3\&4\&5} + p_{3\&4}$ etc.

where:

$p_{1\&2}$, $p_{2\&3}$, $p_{3\&4}$ etc.,

$p_{1\&2\&3}$, $p_{2\&3\&4}$, $p_{3\&4\&5}$ etc. and

$p_{1\&2\&3\&4}$, $p_{2\&3\&4\&5}$, $p_{3\&4\&5\&6}$ etc.

shall be calculated according to the formulas in paragraphs (a)(1) through (a)(4) of this section for a single compartment whose non-dimensional length, J, corresponds to that of a group consisting of the compartments indicated by the indices assigned to p.

(1) The factor "p_i" for a group of three or more adjacent compartments equals zero if the non-dimensional length of such a group minus the non-dimensional lengths of the aftermost and forwardmost compartments in the group is greater than J_{max}.

(2) The "p_i" value for the case of simultaneous flooding of a wing and adjacent inboard compartment shall be obtained by using the formulas of paragraph (b) of this section, multiplied by the factor (1–r).

(3) The reduction factor "r", which represents the probability that the inboard spaces will not be flooded, shall be determined by the following formulas:

For J greater than or equal to 0.2 b/B:

$r = b/B\,[2.3 + 0.08/(J + 0.02)] + 0.1$, if b/B is less than or equal to 0.2

$r = [0.016/(J + 0.02) + (b/B) + 0.36]$ if b/B is greater than 0.2

For J less than 0.2 b/B the reduction factor "r" shall be determined by linear interpolation between

r = as above, with J = 0.2 b/B

and

r = 1 with J = 0

where:

b = the mean transverse distance in feet or meters measured at right angles to the centerline at the subdivision load line between the shell and a plane through the outermost portion of and parallel to that part of the longitudinal bulkhead which extends between the longitudinal limits used in calculating the factor "p_i".

§ XXX.225 The "s_i" Factor.

(a) The factor "s_i", shall be determined according to the following:

$s_i = C[0.15(GZ_{max})(Range)]^{0.5}$ if GZ_{max} is in feet.

$s_i = C[0.5(GZ_{max})(Range)]^{0.5}$ if GZ_{max} is in meters.

where

C = 1, if T_e is less than or equal to 25 degrees.

C = 0, if T_e is greater than 30 degrees.

$C = [(30 - T_e)/5]^{0.5}$ otherwise

GZ_{max} = maximum positive righting lever in feet or meters within the range as given below but not more than 0.328 feet (0.1 meters)

Range = range of positive righting levers beyond the angle of equilibrium (in degrees) but not more than 20 degrees. The range shall be terminated at the angle which immerses the lower edge of openings which are not capable of being closed weathertight.

T_e = final equilibrium angle of heel (degrees)

(b) $s_i = 0$ where the final waterline taking into account sinkage, heel and trim, immerses the lower edge of openings through which progressive flooding may take place. However, if the compartments so flooded are taken into account in the calculations, the requirements of paragraph (a) of this section shall be applied. Weathertight closures are considered to be openings through which progressive flooding may take place.

§ XXX.230 The "h_i" Factor.

(a) The factor "h_i" shall be calculated according to:

$h_i = (H - d)/(H_{max} - d)$, but not more than 1. However, if the uppermost horizontal subdivision in way of the damaged region is below H_{max}, then $h_i = 1$

where:

$H_{max} = d + [0.017\,L_s]\,[1 - (L_s/1640)]$ feet if L_s is less than 820 feet.

$H_{max} = d + [0.056\,L_s]\,[1 - (L_s/500)]$ meters if L_s is less than 250 meters.

$H_{max} = (d + 23)$ feet if L_s is greater than or equal to 820 feet.

$H_{max} = (d + 7)$ meters if L_s is greater than or equal to 250 meters

h_i = probability that the vertical extent of damage has a value H or less

H = assumed vertical extent of damage in feet or meters above the molded baseline.

H_{max} = maximum vertical extent of damage in feet or meters above the molded baseline.

§ XXX.235 Permeability.

For the purpose of the subdivision and damage stability calculations of the regulations, the permeability of each space or part of a space shall be as follows:

Spaces	Permeability
Appropriated to stores	0.60
Occupied by accommodation.	0.95
Occupied by machinery	0.85
Void spaces	0.95
Dry cargo spaces	0.70
Intended for liquid	0 or 0.95, whichever is more severe.

§ XXX.240 Stability Information.

(a) The master of the ship shall be supplied with a stability booklet as required in 46 CFR 170.110.

(b) There shall be permanently exhibited, on the navigating bridge, plans showing clearly for each deck and hold the boundaries of the watertight compartments, the openings therein with the means of closure and position of any controls thereof, and the arrangements for the correction of any list due to flooding.

(c) In developing the information referred to in paragraph (a) of this section, the limiting GM values determined from the subdivision index shall be calculated for the deepest subdivision loadline and the partial load line. For all drafts between the deepest subdivision loadline and the partial loadline, the limiting GM from the subdivision index shall be obtained by linearly interpolating between the limiting values at the subdivision and partial loadlines. For all drafts shallower than the partial load line

draft, the limiting GM shall be the same as that for the partial load line draft.

§ XXX.245 Collision bulkhead.

(a) Each vessel shall be fitted with a collision bulkhead meeting the requirements of 46 CFR 171.085(a) through (g).

(b) The placement of the collision bulkhead shall be such that the "s_i" value for all compartments forward of the collision bulkhead at the deepest subdivision loadline and assuming unlimited vertical extent of damage is not to be less than 1.

Appendix 3—Information and Guidance to Render Assistance

The information and guidance given here is intended to render assistance to practicing naval architects in planning and in making the calculations necessary to comply with the new Subdivision and Damage Stability Regulations. The complete flexibility of these new regulations may not be shown in its entirety by the examples and illustrations, so further study of the regulations themselves is highly encouraged. Further reading on the subject can be found in the reference section of this advanced notice of proposed rule making.

Input Data

The input data fall into three categories, the first measured directly from the ship's plans, the remainder calculated.

1. Data measured directly from the ship's plans: L_s, Midlength, B, X_1, X_2, b and H for each compartment or compartment groups so that $X_2 - X_1$ is a minimum distance (see Appendix 3 Figure 1), and the coordinates of the location of the downflood points on the ship indexed to the compartment into which they flood so they can be disregarded for particular damage cases.

2. Information for intact ship loading conditions:

Subdivision load line draft, Partial load line draft, and the intact metacentric height for the relevant loading requirements at each draft in accordance with XXX.240.

3. Damage specifications:

All one compartment and multiple compartment damage combinations desired for inclusion in the calculations for A_L and A_P, and the premeabilities of each compartment in accordance with XXX.235. For the convenience of naval architects, it is suggested that a systematic numbering system be applied to each compartment and combination of compartments.

Systematic Calculation and Output Data Format

For the sake of having a systematic calculation process and uniform presentation of data from naval architects it is suggested that a spreadsheet format be used for calculating and presenting the data. Computer programs can assist in the process of calculating the probability factors "p" and "h", and are a necessity for calculating the reserve buoyancy and righting levers associated with each assumed case of damage so the probability factor "s" can be determined. Appendix 3 Figure 1 is an easy reference set of equations and a suggested spreadsheet format.

BILLING CODE 4910-14-M

Appendix 3 Figure 1

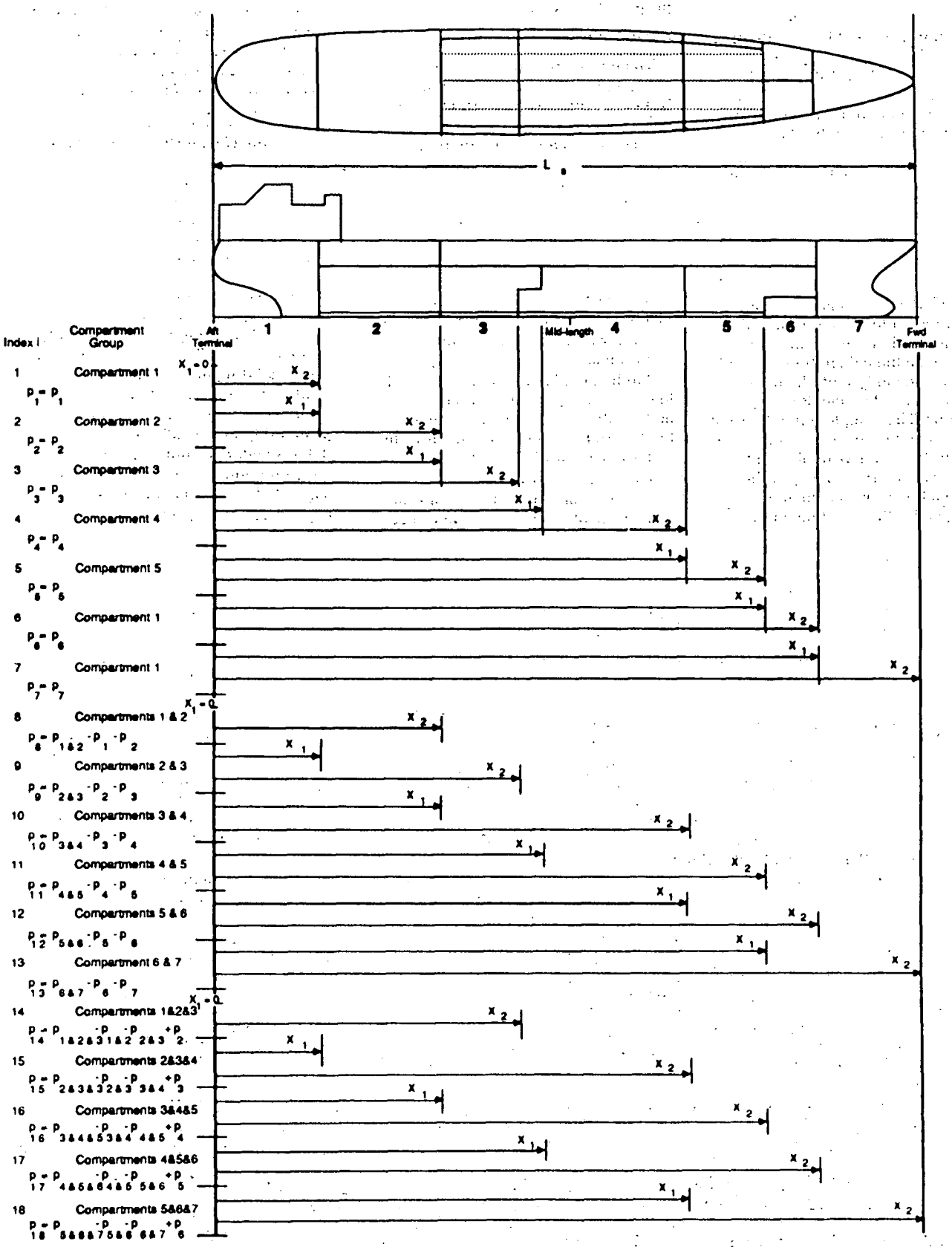

Appendix 3 Figure 2

FORMULAS NECESSARY TO COMPLETE THE CALCULATION SUMMARY SHEET

$R = (C_2 L_s)^{0.3333}$ $\qquad$ $A = 0.5A_L + 0.5A_p$

$E_1 = \dfrac{X_1}{L_s}$ $\qquad$ $J = E_2 - E_1$

$J_{max} = 157.44/L_s$ (feet) but not more than 0.24
$= 48/L_s$ (meters) but not more than 0.24

$E_2 = \dfrac{X_2}{L_s}$ $\qquad$ $J_1 = 1-2E_1$ when: E is greater than or equal to 0.5
$= 2E_2 - 1$ E is less than 0.5

$E = (E_1 + E_2)/2$ $\qquad$ $y = J/J_{max}$

$a = 0.04 + 1.6\,E$ (but not more than 1.2) $\qquad$ $q = 0.4\,J_{max}^2\,F_2$

$F = 0.4 + (E-0.5)\,(0.6 + 0.5a)$ $\qquad$ $z = 0.4\,J_{max}^2\,F_2$ —— in calculating F_2, $y = \dfrac{J_1}{J_{max}}$

$F_1 = y^2 - 0.333\,y^3$ (when y is less than 1.0)
$= y - 0.333$ (otherwise)

$F_2 = 0.333y^3 - 0.083y^4$ (when y is less than 1.0)
$= 0.5y^2 - 0.333y + 0.083$ (otherwise)

$g = J_{max}\,F_1$

Where p_i = one of 4 possible formulas depending on the type of damage;

(1) $p_i = 1.0$
(2) $p_i = F + 0.5\,ag + q$
(3) $p_i = 1 - F + 0.5\,ag$
(4) $p_i = ag$

N.B. The '$_i$' is only an index to each 'p' calculated. It is recommended that each 'p_i' have a separate and distinct number or letter.

if 'z' reduction by subtraction is necessary

$p_i = F + 0.5\,ag + q - z$
$p_i = 1 - F + 0.5\,ag - z$
$p_i = ag - z$

For J greater than or equal to 0.2b/B

$r = b/B\,[2.3 + 0.08/(J+0.02)] + 0.1$ if b/B is less than or equal to 0.2
$r = [0.016/(J + 0.02) + (b/B) + 0.36]$ if b/B is greater than 0.2

For J less than 0.2b/B

$r = [\,r_{(J=0.2b/B)} - 1.0\,]\,(J_{actual})/(0.2b/B)$ select the equation above based on the 'b/B' ratio, and evaluate r with J=0.2b/B

---

examples of p_i reduced by mutiplying by the 'r' reduction for minor* damage

1 compartment examples
$p_i = p_1\,r$
$p_i = p_2\,r$

2 compartment examples
$p_i = (p_{1\&2} - p_1 - p_2)\,r$
$p_i = (p_{2\&3} - p_2 - p_3)\,r$
$p_i = (p_{3\&4} - p_3 - p_4)\,r$

* replace 'r' by 1- r for MAJOR damage

3 compartment examples
$p_i = (p_{1\&2\&3} - p_{1\&2} - p_{2\&3} + p_2)\,r$
$p_i = (p_{2\&3\&4} - p_{2\&3} - p_{3\&4} + p_3)\,r$
$p_i = (p_{3\&4\&5} - p_{3\&4} - p_{4\&5} + p_4)\,r$

4 compartment examples
$p_i = (p_{1\&2\&3\&4} - p_{1\&2\&3} - p_{2\&3\&4} + p_{2\&3})\,r$
$p_i = (p_{2\&3\&4\&5} - p_{2\&3\&4} - p_{3\&4\&5} + p_{3\&4})\,r$
$p_i = (p_{3\&4\&5\&6} - p_{3\&4\&5} - p_{4\&5\&6} + p_{4\&5})\,r$

$s_i = C[0.15(GZ_{max})(Range)]^{0.5}$ if GZ_{max} is in feet
$= C[0.5(GZ_{max})(Range)]^{0.5}$ if GZ_{max} is in meters

$C = 1.0$ if T_e is less than or equal to 25 degrees
$= 0.0$ if T_e is greater than 30 degrees
$= [(30-T_e)/5]^{0.5}$ otherwise

$s_i = 0.0$ if progressive downflooding takes place

Appendix 3 Figure 2 continued

$h_i = (H-d)/(H_{max} - d)$ but NOT more than 1.0. However, $h_i = 1.0$ if uppermost horizontal subdivision in way of the damaged region is below H_{max}

where: L_s is less than 820 ft or 250 meters

$$H_{max} = d + [0.017\ L_s][1 - (L_s/1640)] \text{ feet}$$
$$d + [0.056\ L_s][1 - (L_s/500)] \text{ meters}$$

where: L_s is less greater than or equal to 820 ft or 250 meters

$$H_{max} = (d + 23) \text{ feet}$$
$$(d + 7) \text{ meters}$$

CALCULATION SUMMARY SHEET

Compt.	X_1	E_1	X_2	E_2	E	J	J_{max}	y	F_1	F_2	g	a	ag	F	p_i	p_i reduced for z (if necessary)	p_i reduced for r (if necessary)	s_i	h_i	$p_i s_i h_i$
1 minor																				
MAJOR																				
2 minor																				
MAJOR																				
3 minor																				
MAJOR																				
4 minor																				
MAJOR																				
etc.																				

Compt.	X_1	E_1	X_2	E_2	E	J	J_{max}	y	F_1	F_2	g	a	ag	F	p_i	p_i reduced for z (if necessary)	p_i reduced for r (if necessary)	s_i	h_i	$p_i s_i h_i$
(1&2) minor																				
MAJOR																				
(2&3) minor																				
MAJOR																				
(3&4) minor																				
MAJOR																				
etc.																				

Compt.	X_1	E_1	X_2	E_2	E	J	J_{max}	y	F_1	F_2	g	a	ag	F	p_i	p_i reduced for z (if necessary)	p_i reduced for r (if necessary)	s_i	h_i	$p_i s_i h_i$
(1&2&3) minor																				
MAJOR																				
(2&3&4) minor																				
MAJOR																				
(3&4&5) minor																				
MAJOR																				
etc.																				

summate quantity of ($p_i s_i h_i$)

[FR Doc. 88-7480 Filed 4-5-88; 8:45 am]
BILLING CODE 4910-14-C

federal register

Wednesday
April 6, 1988

Part VI

Department of Agriculture

Commodity Credit Corporation

7 CFR Parts 1497 and 1498

Payment Limitation and Foreign Persons Ineligible for Program Benefits; Proposed Rule

DEPARTMENT OF AGRICULTURE

Commodity Credit Corporation

7 CFR Parts 1497 and 1498

Payment Limitation and Foreign Persons Ineligible for Program Benefits

AGENCY: Commodity Credit Corporation (CCC) and Agricultural Stabilization and Conservation Service (ASCS) USDA.

ACTION: Proposed rule.

SUMMARY: Subtitle C of the Agricultural Reconciliation Act of 1987 (The "1987 Act"), as included in the Omnibus Budget Reconciliation Act of 1987, amended the Food Security Act of 1985 (The "1985 Act") with respect to the application of maximum payment limitation to specified payments which are made in accordance with: (1) Price support and production adjustment programs for the 1989 and 1990 crops; and (2) Conservation Reserve Program contracts executed after December 22, 1987. Accordingly, this proposed rule would set forth at 7 CFR Part 1497 the regulations which would be used in limiting the making of such payments to a person, as defined by the 1985 Act. In order to provide for the uniform application of payment limitation provisions which are applicable to other agricultural conservation programs, 7 CFR Part 1497 would also be applicable to: (1) The Rural Clean Water Program; (2) The Agricultural Conservation Program; (3) The Forestry Incentive Program; (4) The Emergency Conservation Program; and (5) The Colorado River Salinity Control Program.

The 1987 Act also amended the 1985 Act to provide that any person who is not a citizen of the United States or an alien lawfully admitted into the United States shall be ineligible to receive any type of production adjustment payments, price support program loans, payments or benefits made available under the Agricultural Act of 1949, The Commodity Credit Corporation Charter Act, and Subtitle D of title XII of the 1985 Act. A corporation or other entity in which more than a 10 percent ownership interest of the entity is held by a person who is not a citizen of the United States or a lawfully admitted alien is also ineligible to receive such payments, loans, and benefits. Accordingly, this proposed rule would set forth at 7 CFR Part 1498 the regulations which would be applied in determining whether a foreign individual or entity is eligible to receive such payments, loans, and benefits.

DATES: Written comments must be received not later than May 6, 1988, in order to be assured of consideration.

ADDRESS: Written comments on this proposed rule must be submitted to Director, Cotton, Grain, and Rice Price Support Division, Agricultural Stabilization and Conservation Service (ASCS), USDA, P.O. Box 2415, Washington, DC 20013.

FOR FURTHER INFORMATION CONTACT: Charles J. Riley, Section Chief, Cotton, Grain, and Rice Price Support Division, ASCS, USDA, P.O. Box 2415, Washington, DC 20013.

SUPPLEMENTARY INFORMATION: This proposed rule has been reviewed under USDA procedures implementing Executive Order 12291 and Departmental Regulation 1512-1 and has been classified "not major" It has been determined that this rule will not result in: (1) An annual effect on the economy of $100 million or more; (2) a major increase in costs or prices for consumers, individual industries, Federal, State or local governments, or geographic regions; or (3) significant adverse effects on competition, employment, investment, productivity, innovation or the ability of United States-based enterprises to compete with foreign-based enterprises in domestic or export markets.

The titles and numbers of the Federal assistance programs to which this proposed rule applies are: Commodity Loan and Purchases—10.051; Cotton Production Stabilization—10.052; Emergency Conservation Program—10.054; Feed Grain Production Stabilization—10.055; Wheat Production Stabilization—10.058; Agricultural Conservation Program—10.063; Forestry Incentives Program—10.064; Rice Production Stabilization—10.065; and Conservation Reserve Program—10.069 as found in the Catalog of Federal Domestic Assistance.

It has been determined by an environmental evaluation that this action will have no significant impact on the quality of the human environment. Therefore, neither an environmental assessment nor an Environmental Impact Statement is needed.

This program/activity is not subject to the provisions of Executive Order 12372 which requires intergovernmental consultation with State and local officials. See the Notice related to 7 CFR Part 3015, Subpart V, published at 48 FR 29115 (June 24, 1983).

Statutory Background

Maximum payment limitations for commodity programs were first mandated by Section 101 of the Agricultural Act of 1970. This Act provided for such restrictions with respect to the 1971 through 1973 crops of wheat, feed grains, and upland cotton. Subsequent legislation expanded the application of similar restrictions to subsequent crops of these commodities as well as rice and extra long staple cotton. The most recent payment limitation provisions were authorized by Section 1001 of the Food Security Act of 1985 (the "1985 Act").

The Agricultural Reconciliation Act of 1987 (the "1987 Act"), as included in the Omnibus Budget Reconciliation Act of 1987, Pub. L. 99-203, amended the 1985 Act with respect to the application of maximum payment limitation restrictions to certain agricultural price support, production adjustment and conservation programs. The amendments made by the 1987 Act are effective for the 1989 and 1990 crops of wheat, feed grain, rice, upland, and extra long staple cotton, honey, and any other commodity for which a price support loan program is established under the Agricultural Act of 1949, as amended (the "1949 Act"), which allows a producer to repay such a loan at less than the original loan level. The amendments are applicable to any conservation reserve program contract entered into on or after December 22, 1987 but are applicable to such contracts entered into before that date.

Section 1001(1) of the 1985 Act provides that, with respect to each of the 1987 through 1990 crops, the total amount of deficiency payments (excluding any payment which is the result of any reduction in the price support rate for wheat or feed grains under section 107D(c)(1) or 105(c)(1) of the 1949 Act, respectively, i.e., a "Findley payment") and land diversion payments that a person may receive under one or more of the annual programs established under the 1949 Act for wheat, feed grains, upland cotton, extra long staple cotton, and rice may not exceed $50,000.

Section 1001(2) of the 1985 Act provides that for each of the 1987 through 1990 crops the total amount of the following payments that a person may receive under one or more of the annual programs established under the 1949 Act for wheat, feed grains, upland cotton, extra long staple cotton, rice, honey and any other commodity with respect to which producers may repay a loan at less than the original loan level may not exceed $250,000: (1) Deficiency payments; (2) diversion payments; (3) any part of any payment that is determined by the Secretary to represent compensation for resource

adjustment (excluding land diversion payments) or public access for recreation; (4) disaster payments; (5) any gain realized by a producer from repaying a price support loan at less than the original loan level; (6) Findley payments; (7) loan deficiency payments; and (8) inventory reduction payments.

As originally enacted, the 1985 Act required the Secretary to issue regulations defining the term "person" and to provide for such rules as the Secretary determines necessary to assure a fair and reasonable application of the maximum payment limitations of the 1985 Act. However, the 1987 Act made significant amendments to the 1985 Act by: (1) Specifying the requirements that must be met by participants in various agricultural programs in order for such participants to be considered to be a person who is eligible to receive the above specified program payments; (2) generally limiting the amount of benefits which a farming operation may receive if an individual or entity who is a program participant has an interest in two or more entities which are engaged in farming operations; (3) providing that foreign individuals and entities would be ineligible to receive specified agricultural program payments, loans, and benefits unless such individuals, or the individuals who own the entity, provide a substantial amount of personal labor in the production of crops on the farm owned or operated by the individual or entity.

Accordingly, this proposed rule would set forth at 7 CFR Part 1497 the regulations which define the term "person" for purposes of applying the maximum payment limitation provisions of the 1985 Act. This proposed rule would also set forth at 7 CFR Part 1498 the regulations which would be applicable in determining whether foreign individuals or entities are eligible to receive specified program, payments, loans, and benefits.

Other payment limitation provisions are applicable to the Agricultural Conservation Program; the Emergency Conservation Program; the Forestry Incentive Program; the Rural Clean Water Program; and the Colorado River Salinity Control Program. In order to provide for the uniform administration of these programs, this proposed rule would provide that payments made in accordance with contracts or agreements entered into under these programs after August 1, 1988, would be subject to the provisions of 7 CFR Part 1497.

Proposed Rule

Section 1301 of the 1987 Act amended the 1985 Act by adding a new section 1001A to provide that: (1) A person, as defined in section 1001 (5)(B)(i) of the 1985 Act, who receives specified farm program payments may not also hold directly or indirectly substantial beneficial interests in more than two entities, as defined in section 1001 (5)(B)(i)(II) of the 1985 Act, which are engaged in farming operations that receive such payments; and (2) such a person that does not receive such payments may not hold directly or indirectly substantial beneficial interest in more than three such entities. If a person owns a substantial beneficial interest in excess of the permitted number of entities, the payment which is made to the "excess" entity is reduced by an amount that bears the same relation to the full payment that the person's beneficial interest in the entity bears to all beneficial interests in the subject entity.

In order for an individual or entity to be made aware of these limitations, section 1001A(a)(2) of the 1985 Act provides that an entity receiving a specified payment must notify each individual or entity that holds a substantial beneficial interest in such entity of these provisions. In addition, each affected person must notify the Secretary of Agriculture of those entities which are to be considered eligible to receive payments. Failure of the affected person to provide the required notification will result in the reduction of payments commensurate with the individual's or entity's share in the subject entity.

Accordingly, the proposed rule would set forth at 7 CFR § 1491.3 the definitions of the terms "permitted entity", "person", and "substantial beneficial interest". A permitted entity would be an entity which is designated annually by an individual or by an entity who is eligible to receive payments which are subject to the payment limitation provisions of the 1985 Act.

Generally, a person would be defined as an individual, corporation, joint stock company, association, limited partnership, irrevocable trust, charitable organization or similar entity including any individual or entity participating in a farming operation as: A partner in a general partnership; a participant in a joint venture; or a participant in a similar entity. A State, political subdivision and agencies thereof would also be considered to be one person.

A substantial beneficial interest would be defined as an interest which, either directly or indirectly, results in an ownership interest of 10 percent or more. A lesser amount would be applicable if it was determined that a financial arrangement had been established for the purpose of circumventing the provisions of 7 CFR Part 1497.

The notification procedure which would be applicable to an entity receiving a payment and those individuals and entities who have a substantial beneficial interest in such an entity would be set forth at 7 CFR 1497.5. In accordance with 7 CFR 1497.5, under the following example, the following notifications would be required.

AGRICULTURAL INCORPORATED

Stockholder	Ownership interest (percent)
A Incorporated [1]	33⅓
B and F Partnership [2]	33⅓
Individual C	33⅓

[1] A Incorporated:

Stockholder	Ownership interest (percent)
Individual A	50
Individual D	25
Individual E	25

[2] B and F Partnership:

Partners	Ownership interest (percent)
Individual B	50
Individual F	50

Agricultural, Inc., consisting of A, Inc., B and F Partnership, and Individual C, must inform the local Agricultural Stabilization and Conservation (ASC) Committee of the stockholders of Agricultural, Inc., and must inform each stockholder of the "permitted entity" provision.

A, Inc., consisting of Individual A, Individual D, and Individual E must inform each stockholder of the "permitted entity" provision. Each stockholder and partner must then inform the local ASC committee of their selected entities for payment.

B and F Partnership, consisting of Individual B and Individual F must inform each partner of the "permitted entity" provision and each partner must then inform the local ASC committee of their selected entities for payment.

If Individual E, a stockholder of A, Inc., does not choose A, Inc., as a

"permitted entity", the payments made to Agricultural, Inc., would then be reduced by Individual E's ownership interest in A, Inc. For example, if Agricultural, Inc., is eligible to receive $50,000, the 33⅓ interest of A, Inc., in Agricultural, Inc., would be $16,665. Individual E's 25 percent interest in the $16,665 would be $4,166. Therefore, Agricultural, Inc., would be eligible to receive $45,834.

Section 1302 of the 1987 Act amended the 1985 Act by providing in section 1001A(b) of the 1985 Act that in order for a person to be eligible to receive specified payments such person must be actively engaged in farming. In order for an individual, including an individual who is a partner in a general partnership or a participant in a joint venture, to be considered to be actively engaged in farming the individual must make a significant contribution to the farming operation of: (1) Capital, equipment, or land, and (2) active personal labor or active personal management.

With respect to limited partnerships, corporations, and similar entities, the entity must make a significant contribution of capital, equipment, or land to the farming operation and the stockholders or participants must make a significant contribution of active personal labor or active personal management.

Special provisions are applicable to landowners, family members, and sharecroppers so long as their contributions are at risk and commensurate with the person's share of the profits and losses from such operation. Landowners who contribute owned land to a farming operation in return for a share rent of the crop produced on the farm or who retain control of the land and receive all of the income from the land are considered to be actively engaged in farming. Similarly, a sharecropper who makes a significant contribution of active personal labor to the farming operation and who receives a specified share of the crop produced on the farm in total payment for such labor is considered to be actively engaged in farming.

Section 1001A(b)(3)(B) of the 1985 Act provides that with respect to a farming operation conducted by persons, a majority of whom are individuals who are family members, an adult family member who makes a significant contribution of active personal management or active personal labor shall be considered to be actively engaged in farming if such person's contribution to the farming operation is at risk and is commensurate with the person's share of the profits and losses from such operation.

Section 1001A(b)(4) of the 1985 Act provides that a landlord who is contributing land to the farming operation will not be considered to be actively engaged in farming if the landlord receives cash rent or a crop share guaranteed to be paid as rent. This section also provides that any other person who does not meet the actively engaged requirements for individuals, entities, landowners, family members, or sharecroppers shall not be considered to be actively engaged in farming.

Accordingly, 7 CFR 1497.3 sets forth the following definitions which will be used in determining whether a person is actively engaged in farming: "active personal labor"; "active personal management"; "capital"; "equipment"; "family member"; "land"; and "sharecropper." 7 CFR 1497.6–1497.16 sets forth the regulations which will be used to determine whether a person is actively engaged in farming.

Section 1001(5)(B)(iii) of the 1985 Act provides that, with respect to any married couple, the husband and wife shall be considered to be one person. However, any married couple consisting of spouses who prior to their marriage were separately engaged in unrelated farming operations shall be treated as separate persons with respect to such operations so long as the operations remain separate. Accordingly, 7 CFR 1497.19 sets forth the regulations with respect to farming operations conducted by a husband and wife.

The regulations currently set forth at 7 CFR Part 795 with respect to minor children, charitable organizations and Indian tribal ventures are generally the same as the regulations set forth in 7 CFR Part 1497. However, 7 CFR 1497.22 provides that Indian tribal ventures would not be subject to payment limitations provisions only with respect to land which is owned by the tribal venture.

An estate is currently considered to be the same person as the sole heir of the estate. 7 CFR 1497.12 would provide that an estate would be a separate person if the heirs or the personal representative of the estate are determined to be actively engaged in farming. In addition, 7 CFR 1497.12 provides that if the deceased would have been combined with another person for purposes of 7 CFR Part 1497, such person and the estate will continue to be combined.

Section 1001(5)(E) of the 1985 Act require that a change in a farming operation which results in an increase in the number of persons must be bona fide and substantive. Accordingly, 7 CFR 1497.18 sets forth provisions applicable to changes in farming operations.

Section 1305(b) of the 1987 Act provides that the Secretary may waive these provisions in order to allow for the equitable reorganization of farming operations so long as the reorganization is completed prior to final date by which producers must execute a contract to participate in the 1989 commodity programs and the reorganization will not result in an increase in the amount of program payments. Accordingly, 7 CFR 1497.26 provides that the Deputy Administrator may approve of such reorganizations to the extent that payments are not increased.

Section 1305(d) of the 1987 Act provides that this part shall apply to all conservation reserve program contracts entered into on or after December 22, 1987. However, since the final rule which will set forth the regulations which implement this section will not become effective until after the execution of such contracts, the provisions of 7 CFR Part 795 would apply to such contracts unless the producer elects in writing to use the provisions of this part for contracts entered into on or after December 22, 1987 and before August 1, 1988. Accordingly, 7 CFR 1497.1 provides that this part would apply to contracts entered into with respect to the program specified in 7 CFR 1497.1(a)(3) on or after August 1, 1988.

Section 1001(7) of the 1985 Act provides that the Secretary shall establish time limits for the various steps involved in the administrative appeal with respect to the application of the maximum payment limitation provisions. Accordingly, 7 CFR 1497.27 sets forth the time limits which apply to disputes rising under 7 CFR Part 1497.

In accordance with the proposed provisions of 7 CFR Part 1497, the following determinations would be made:

Landowner

Example 1. Landowner A rents land for one-fourth of the crop to Corp. B. Landowner A's share of the profits or losses from the farming operation are commensurate with the landowner's contribution to the operation and the contributions are at risk.

Determination. Landowner A is considered to be actively engaged in farming. The actively engaged determination for Corp. B will be determined separately.

Example 2. AB Partnership owns land and rents the land to Individual E for one-third of the crop. The partnership's share of the profits or losses from the farming operation are commensurate with the partnership's contribution to

the operation and the contributions are at risk.

Determination. AB Partnership is not actively engaged in farming. A partnership is not considered a "person" for payment limitation purposes and therefore would not be considered to be actively engaged as a landowner. The partnership's partners would need to make a significant contribution of either active personal management or active personal labor in order for the partners to be considered actively engaged in farming.

Individual

Example. Individual Z, a producer, rents 1,500 acres of land on a share rent basis. Individual Z owns the equipment and contributes at least 50 percent of the producer's commensurate share of active personal labor and contributes 100 percent of the producer's active personal management. In this situation, Individual Z's share of the profits or losses from the farming operation are commensurate with the contribution to the operation and the contributions are at risk.

Determination. Individual Z is considered to be actively engaged in farming.

Sharecropper

Example. Individual D, a producer, farms 800 acres of land for Landowner F. Individual D agrees to farm Landowner F's land for one-third of the cotton crop. Individual D contributes 80 percent of active personal labor and the other 20 percent of the labor is hired. Individual D's share of the profits or losses from the farming operation are commensurate with Individual D's contribution to the operation and the contributions are at risk.

Determination. Individual D is considered to be actively engaged in farming. The actively engaged determination for Landowner F will be determined separately.

Joint Operation

Example 1. Partnership AB farms 2,000 acres of land. The partnership owns the equipment and the individual partners provide at least 50 percent of their commensurate share of active personal labor and active personal management. Each partner's share of the profits or losses from the farming operation are commensurate with the partner's contribution to the operation and their contributions are at risk.

Determination. Partner A and Partner B are considered to be actively engaged in farming.

Example 2. Partnership CD farms 2,000 acres of land. The individual partners contribute capital and at least 50 percent of their commensurate share of active personal management for the operation. Labor is hired. Equipment and land are rented from third parties. Each partner's share of the profits or losses from the farming operation are commensurate with the partner's contribution to the operation and their contributions are at risk.

Determination. Partner C and Partner D are considered to be actively engaged in farming.

Limited Partnerships and Corporations

Example. Corp. XYZ rents 3,000 acres of land for one-fourth of the crop. Corp. XYZ contributes capital to the operation. The stockholders, owning a total of 54 percent of Corp. XYZ, contribute at least 50 percent of their commensurate share of active personal management. The stockholder's share of the profits or losses from the farming operation are commensurate with their contributions to the operation and the contributions are at risk.

Determination. Corporation XYZ is considered to be actively engaged in farming.

Irrevocable Trusts

Example 1. EF Trust, with Individual E and Individual F, each having a interest of 50 percent, contributes capital to the farming operation. Each beneficiary contributes at least 50 percent of their commensurate share of active personal management. All labor is hired. The land and equipment are leased. The beneficiaries share of the profits or losses from the farming operation are commensurate with the beneficiaries contribution to the operation and the contributions are at risk. Individual E also has another farming interest as an individual.

Determination. EF Trust is considered to be actively engaged in farming. Individual E may also be considered as a separate person with respect to Individual E's own farming operation and could also be considered to be a separate person if all requirements are met.

Example 2. Individual G is a 100 percent beneficiary of G Trust. G Trust contributes equipment and capital to the farming operation. Individual G contributes at least 50 percent of the operation's personal labor. G Trust leases all land and hires all management and 50 percent of the labor. Individual G also has farming interests as an individual.

Determination. G Trust is considered to be actively engaged in farming. Individual G and G Trust are considered as one person because Individual G is the sole beneficiary of the trust.

Revocable Trusts

Example. ST Trust is a revocable trust with Individual S and Individual T, each having an interest of 50 percent. Individual U is the grantor. ST Trust contributes capital and equipment to the farming operation. The beneficiaries each contribute at least 50 percent of their commensurate share of active personal management to the operation. All land is leased and all labor is hired. The beneficiaries share of the profits or losses from the farming operation are commensurate with their contribution to the operation and the contributions are at risk.

Determination. ST Trust is considered to be actively engaged in farming. ST Trust and Individual U are considered as one person because Individual U is the grantor of a revocable trust.

Estates

Example 1. E Estate is formed upon the death of Individual E in February of 1989. Individual B is the sole heir of the estate and provides at least 50 percent of Individual B's commensurate share of active personal management. E Estate provides equipment and rented land. All labor is hired. Individual B also has individual farming interests. All contributions are commensurate and are at risk.

Determination. All estates may be considered to be actively engaged in farming if the heirs or personal representative of the estate are considered to be actively engaged in farming. Even though Individual B is the sole heir of the estate, Individual B and the estate are not considered to be one person. Therefore, if Individual B is determined to be actively engaged in farming with respect to the separate farming operation, Individual B may also be considered to be a person so long as Individual E and Individual B would not have been combined as one person in accordance with 7 CFR Part 1497.

Example 2. C Estate was formed in October 1987. The heirs are Individual E, F, and G, each having a one-third interest. Prior to the death of Individual C, Individual C owned equipment and all of the acreage farmed was cash leased. Individual E will serve as executor for the estate. For 1989, the C Estate will cash lease land. C Estate will contribute cash rented land, owned equipment, and capital for the farming operation. Individual E will provide active personal management with the estate hiring all labor. All contributions are commensurate and are at risk.

Determination. C Estate is considered to be actively engaged in farming. The heirs may also be considered to be separate persons with respect to other farming operations if all conditions are met for such operation.

Example 3. Y Estate is formed on August 1989. The deceased Individual Y had previously entered into a contract to participate in the 1989 Acreage Reduction Program. Y Estate will continue to farm the acreage that was leased to Individual Y as a successor-in-interest. Y Estate will hire any labor that is needed for the crops in the farming operation. The personnal representative of Y Estate will manage the farming operation.

Determination. Y Estate is considered to be actively engaged in farming because Individual Y was had executed a contract to participate in the program. However to continue to be actively engaged in farming for the following year, the heirs or personal representative of the estate will have to provide active personal labor or active personal management and the estate will have to provide capital, equipment, or land.

Cash Rent Tenants

Example 1. Individual B rents 800 acres of cropland from Landowner C for $30 per acre. Individual B contributes 80 percent of active personal labor and capital to the farming operation. 20 percent of the labor is hired and 100 percent of the management is hired. Individual B's share of the profits or losses from the farming operation are commensurate with Individual B's contributions to the operation and the contributions are at risk.

Determination. Individual B is considered to be actively engaged in farming.

Example 2. Individual C rents 800 acres of cropland from Landowner D for $35 per acre. Individual C contributes 100 percent of active personal management and capital to the operation. 100 percent of the labor is hired. The equipment is leased. Individual C's share of the profits or losses from the farming operation are commensurate with Individual C's contributions to the operation and the contributions are at risk.

Determination. Individual C is not considered to be actively engaged in farming. Individual C is contributing active personal management and is not contributing equipment. In this situation, Individual C and Landowner D would be considered to be one person. A cash rent tenant may contribute active personal labor and either land or equipment and be considered to be actively engaged in farming. If a cash rent tenant contributes active personal management and does not contribute a significant contribution of active personal labor, such tenant must also contribute a significant contribution of equipment to the farming operation.

Family Member

Example. Father A has been farming owned land and rented land for approximately 15 years. Son B, an adult, is starting to farm with his father. Son B contributes a significant amount of active personal labor. Father A contributes all of the farming operation's capital, equipment, and active personal management.

Determination. Father A and Son B are both considered to be actively engaged in farming and would be considered to be two persons.

Husband and Wife

Example 1. Husband A and Wife B both were involved in separate unrelated farming operations prior to their marriage. Husband A rents 1,000 acres of cropland for one-fourth of the crop. Wife B owns land that was given to her by her father before her marriage to Husband A. Both operations have been kept separate and distinct during the marriage. Both persons have been determined to be actively engaged in farming.

Determination. Husband A and Wife B would be considered to be two persons since both farming operations have remained separate and distinct.

Example 2. Husband C owns 500 acres of land that he rents to Producer Z for one-third of the crop. Wife D also owns 500 acres of land which was given to her before her marriage by her grandfather and is rented to Producer Z for one-third of the crop. Both farms were reconstituted as one farm when both rented their land to Producer Z. The financing and accounting for each person has been kept separate and distinct.

Determination. Husband C and Wife D are each considered to be actively engaged in farming because both are landowners but they would be considered to be one person because all aspects of the farming operations were not kept separate and distinct.

Example 3. Husband G owns 500 acres of land that is rented to Producer Y for one-fourth of the crop. Wife D owns 600 acres of land which was bought by her before her marriage and is rented to Producer Y for one-fourth of the crop. Both farms were reconstituted as one farm when both rented their land to Producer Y. Accounting and farming operations were not kept separate after the reconstitution.

Determination. Husband C and Wife D are each considered to be actively engaged in farming because both are landowners; however, because the farming operations were not kept separate and distinct, they would be considered as one person.

Example 4. Both Husband A and Wife B were engaged in their farming operations before their marriage. Husband A is a partner in Partnership AD. Wife B is a stockholder in Corporation BC. Each farming operation has remained separate and distinct. Husband A and Corporation BC are determined to be actively engaged in farming.

Determination. Husband A and Corporation BC will be considered to be two persons. If a married couple prior to marriage were separately engaged in unrelated farming operations, each spouse will be treated as a separate person regardless of the nature of the farming operations so long as such operations remain separate and distinct.

Minor Children

Example. Minor A has a farming operation in which Parents B and C have interest. Minor A also has housing separate from Parents B and C. Minor A contributes equipment leased from an unrelated party, active personal labor, and active personal management to the farming operation.

Determination. Minor A would be considered to be actively engaged in farming. Minor A and Parents B and C would be considered to be separate persons since Minor A maintains a separate household.

Indian Tribal Ventures

Example. Indian tribal venture AB farms owned land. The Bureau of Indian Affairs (BIA) has certified that no one Indian will receive payments exceeding the applicable payment limitation with respect to such land. Individual Indians also farm land owned by third parties.

Determination. The BIA certification is effective only for land owned by the Indian tribal venture. Each individual Indian farming on other land is subject to the applicable payment limitation provisions for their individual operations. Such Indians would be required to report to the local county ASC committee their share of payments received through the Indian tribal venture in order to assure that each Indian would not receive payments in excess of the applicable payment limitation.

Section 1001C of the 1985 Act provides with respect to the 1989 and 1990 crops that any person who is not a citizen of the United States or an alien lawfully admitted into the United States for permanent residence shall be ineligible to receive any type of production adjustment payment, price support program loan, payment, or benefit made available under the 1949 Act, the Commodity Credit Corporation Charter Act, as amended (the "Charter Act"), or Subtitle D of XII of the 1985 Act with respect to any commodity produced, or any land set aside from production, on a farm that is owned or operated by such person. However, such an individual who is providing land, capital, and a substantial amount of personal labor in the production of crops on such a farm would not be ineligible to receive such payments, loans, and benefits.

Section 1001C of the 1985 Act also provides that a corporation or other entity shall be ineligible to receive such payments, loans, or other benefits if more than 10 percent of the beneficial ownership of the entity is held by persons who are not citizens of the United States or aliens lawfully admitted to the United States for permanent residence unless such persons provide a substantial amount of active personal labor in the production of crops produced on the farm. The Secretary is also authorized to make payments, loans, and other benefits to such an ineligible entity in an amount which the Secretary determines to be representative of the percentage interests in the entity that is owned by citizens of the United States and aliens lawfully admitted to the United States for permanent residence.

Accordingly, this proposed rule would set forth at 7 CFR Part 1498 the regulations which implement section 1001C of the 1985 Act with respect to the 1989 and 1990 crops. For purposes of 7 CFR Part 1498, the terms "person", "entity", "capital", "land", and "active personal labor" are defined in 7 CFR 1498.3 in virtually the same manner as in 7 CFR 1497.3 Those payments, loans, and benefits which are subject to the provisions of 7 CFR Part 1498 are defined in 7 CFR 1498.3 as any cash or in-kind payment, loan disbursement or other benefit made in accordance with the 1949 Act, the Charter Act, and subtitle D of title XII of the 1985 Act which results in an expenditure by the Commodity Credit Corporation or any other Federal agency.

The regulations at 7 CFR 1497.25, 1497.27 and 1497.28 set forth provisions which are applicable to: Determinations of a scheme or device which are designed to evade 7 CFR Part 1497; the granting of equitable relief by the Deputy Administrator; and the right to seek an administrative appeal in accordance with 7 CFR Part 780. Similar provisions are set forth at 7 CFR 1498.6, 1498.7, and 1498.8.

In determining whether more than 10 percent of the beneficial ownership of an entity is held by persons who are not citizens of the United States or by aliens lawfully admitted into the United States for permanent residence, 7 CFR 1498.4 would provide that such a determination would be made based upon such ownership interest which is the higher of such amount on the date the applicable program contract or agreement is executed or as determined by the Deputy Administrator, the final harvest date which normal in the area for the applicable program crop. Accordingly, any increase in the foreign ownership of an entity after the date of execution of such a contract or agreement would affect the eligibility of an entity to receive a payment, loan, and benefit. Any payment, loan, and benefit which had been made prior to the date on which the beneficial ownership requirement was exceeded would be required to be refunded by the entity.

In accordance with 7 CFR 1498.4, payments, loans, and benefits may be received by: (1) A citizen of the United States; (2) an alien legally admitted to the United States for permanent residence; and (3) an entity which is not subject to 7 CFR Part 1498 who, through such means as a lease, is in lawful possession of a farm owned by an entity or individual who is ineligible to receive payments, loans, and benefits. Similarly, such individual or entity who is a successor-in-interest to a program contract or agreement such executed by a foreign individual or entity with respect to such a farm may be eligible to receive payments, loans, and benefits.

In accordance with 7 CFR 1498.5, an entity who is subject to the provisions of 7 CFR Part 1498 would be required to provide to the county ASC committee or other party who is executing the program contract or agreement, the names and social security or tax identification numbers of all foreign individuals and foreign entities who have a beneficial ownership interest in an entity in excess of 10 percent. Failure to provide such information would result in the ineligibility of the entity to receive any payment, loan, and benefit.

Accordingly, this proposed rule would amend Title 7 of the Code of Federal Regulations as follows:

1. A new Part 1497 is added to read as follows:

PART 1497—PAYMENT LIMITATION

Sec.

1497.1 Applicability.
1497.2 Administration.
1497.3 Definitions.
1497.4 Timing for determining status of persons.
1497.5 Limitation on the number of entities through which an individual or entity may receive a payment and required notification.
1497.6 General provisions for determining whether an individual or entity is actively engaged in farming.
1497.7 Individuals.
1497.8 Joint operations.
1497.9 Limited partnerships and corporations.
1497.10 Irrevocable trusts.
1497.11 Revocable trusts.
1497.12 Estates.
1497.13 Landowners.
1497.14 Family members.
1497.15 Sharecroppers.
1497.16 Cash rent tenants.
1497.17 Persons not considered to be actively engaged in farming.
1497.18 Changes in farming operations.
1497.19 Husband and wife.
1497.20 Minor children.
1497.21 Charitable organizations.
1497.22 Indian tribal ventures.
1497.23 States, political subdivisions, and agencies thereof.
1497.24 Scheme or device.
1497.25 Joint and several liability.
1497.26 Equitable Adjustments.
1497.27 Appeals.
1497.28 Paperwork Reduction Act assigned number.

Authority: Sections 1001 through 1001C of the Food Security Act of 1985, as amended, 99 Stat. 1444, as amended (7 U.S.C. 1308, et seq.); The Rural Development, Agriculture, and Related Agencies Appropriations Act, 1988, as contained in section 101(k) of Pub. L. 100-202.

§ 1497.1 Applicability.

(a) This part is applicable to the following programs and any other programs as may be provided for in individual program regulations:

(1) The annual price support and production adjustment programs for the 1989 and subsequent crops of wheat, feed grains, upland cotton, extra long staple cotton, and rice;

(2) Any program authorized by the Agriculture Act of 1949 under which a gain is realized by the repayment of a loan at a level lower than the original loan level;

(3) The Conservation Reserve Program;

(4) The Agricultural Conservation Program;

(5) The Emergency Conservation Program;

(6) The Forestry Incentive Program;

(7) The Rural Clean Water Program; and

(8) The Colorado River Salinity Control Program.

(b) This part shall be applied to the programs specified in paragraph (a) (1) and (2) of this section on a crop year basis and with respect to all of the programs in paragraph (a) (3) through (8) of this section shall be applied on a fiscal year basis.

(c) This part is applicable to rental payments made in accordance with a Conservation Reserve Program contract entered into on or after August 1, 1988. For Conservation Reserve Program contracts entered into on or after December 22, 1987 and before August 1, 1988, the person may elect in writing to have the provisions of this part apply to such a contract by notifying the county committee in writing.

(d) With respect to any program specified in paragraph (a) (4) through (8) of this section, this part is applicable to any payment made in accordance with a contract or agreement entered into on or after August 1, 1988.

(e) The regulations set forth at Part 795 of this title (1988 edition) shall be applicable to Conservation Reserve Program contracts entered into prior to December 22, 1987, any such contract entered into after such date and before August 1, 1988, if the person has not made the notification specified in paragraph (a) of this section and, with respect to any program specified in paragraph (a) (4) through (8) of this section, a contract or agreement entered into prior to August 1, 1988.

(f) This part shall be used to determine whether certain individuals or legal entities are to be treated as one person or as separate persons for the purpose of applying the payment limitation provisions which are applicable to the programs specified in paragraph (a) of this section.

(g) In cases in which more than one provision of this part are applicable, the provision which is most restrictive shall apply.

(h) Payments made to public schools with respect to land which is owned by a public school district and payments made to a State with respect to land owned by a State which is used to maintain a public school shall not be subject to the payment limitation.

§ 1497.2 Administration.

(a) The regulations in this part will be administered under the general supervision and direction of the Executive Vice President, CCC and the Administrator, ASCS. In the field, the regulations in this part will be administered by the Agricultural Stabilization and Conservation State and county committees (herein referred to as "State and county committees", respectively.

(b) State executive directors, county executive directors and State and county committees do not have authority to modify or waive any of the provisions of this part.

(c) The State committee may take any action authorized or required by this part to be taken by the county committee which has not been taken by such committee. The State committee may also:

(1) Correct or require a county committee to correct any action taken by such county committee which is not in accordance with this part; or

(2) Require a county committee to withhold taking any action which is not in accordance with this part.

(d) No delegation herein to a State or county committee shall preclude the Executive Vice President, CCC, and the Administrator, ASCS, or a designee, from determining any question arising under this part or from reversing or modifying any determination made by a State or county committee.

§ 1497.3 Definitions.

(a) The terms defined in Part 719 of this title shall be applicable to this part and all documents issued in accordance with this part, except as otherwise provided in this section.

(b) The following definitions shall be applicable to this part:

Active personal labor. Active personal labor is providing physical activities involved in land preparation, planting, cultivating, or harvesting of agricultural commodities in the farming operation, or where applicable, providing physical activities required to establish and maintain conserving cover crops or conserving use acreages.

Active personal management. Active personal management is providing:

(1) The general supervision and direction of activities and labor involved in the farming operation; or

(2) Providing services (whether performed on-site or off-site) reasonably related and necessary to the farming operation including any of the following:

(i) Supervision of activities involved in land preparation, planting, cultivating, and harvesting of agricultural commodities;

(ii) Business-related action which include discretionary decision-making;

(iii) Evaluation of the financial condition and needs;

(iv) Assistance in the structuring or preparation of financial reports or analyses;

(v) Consultations in or structuring of business-related financing arrangements; or

(vi) Any other service reasonably necessary to conduct the farming operation and for which service the operation would ordinarily be charged a fee.

Capital. Capital consists of the funding provided by an individual or entity to the farming operation in order for such operation to conduct farming activities. In determining whether an individual or entity has contributed capital to the farming operation such capital must have been derived from a fund or account separate and distinct from that of any other individual or entity involved in such operation. Capital does not include the value of any labor or management which is contributed to the farming operation. A capital contribution may be a direct out-of-pocket input of a specified sum or an amount borrowed by the individual or entity. With respect to a farming operation which consists of more than one individual or entity, such capital must be contributed directly by the individual or entity and must not be acquired as a result of a loan made to:

(1) The farming operation in which the individual or entity has an interest;

(2) Such individual, entity, or farming operation by the farming operation or any of its members, beneficiaries or related entities; or

(3) Such individual, entity, or farming operation, which was guaranteed or secured by the farming operation or any of its members, beneficiaries or related entities.

Entity. An entity is a corporation, joint stock company, association, limited partnership, irrevocable trust, revocable trust, estate, charitable organization, or other similar entity including any such organization participating in the farming operation as a partner in a general partnership, a participant in a joint venture, a grantor of a revocable trust, or as a participant in a similar entity.

Equipment. Equipment is the machinery and implements needed by the farming operation for land preparation, planting, cultivating, or harvesting of the crops involved. With respect to a farming operation which consists of more than one individual or entity, such equipment must be contributed directly by the individual or entity and must not have been acquired as a result of a loan made to:

(1) The farming operation in which the individual or entity has an interest;

(2) Such individual, entity, or farming operation by the farming operation or

any of its members, beneficiaries or related entities; or

(3) Such individual, entity, or farming operation, which was guaranteed or secured by the farming operation or any of its members, beneficiaries or related entities.

Family member. The term "family member" means an individual to whom another member in the farming operation is related as lineal ancestor, lineal descendant, or sibling, including spouses of those family members who do not make a significant contribution to the farming operation themselves.

Farming operation. A farming operation is a business enterprise operated by an individual or entity which is receiving payments under one or more of the programs specified in § 1497.1.

Financing. Financing is the providing or securing of funds for the farming operation or the provision of service or goods to such operation at less than the fair market value.

Land. Land is cropland with normal crop acreage bases for the farming area. With respect to a farming operation which consists of more than one individual or entity, any land contributed to the farming operation by an individual or entity must be contributed directly by the individual or entity and not acquired as a result of a loan made to:

(1) The farming operation in which the individual or entity has an interest;

(2) Such individual, entity, or farming operation by the farming operation or any of its members, beneficiaries or related entities; or

(3) Such individual, entity, or farming operation, which was guaranteed or secured by the farming operation or any of its members, beneficiaries or related entities.

Payment. A payment includes:

(1) With respect to the programs specified in § 1497.1(a) (1) and (2):

(i) Any part of any payment that is determined by the Deputy Administrator to represent compensation for resource adjustment (excluding land diversion payments) or public access for recreation;

(ii) Any disaster payment made under one or more of the annual programs for a commodity established under the Agricultural Act of 1949;

(iii) Any gain realized by a producer from repayng a loan for a crop of wheat, feed grains, upland cotton, rice, or honey at the rate permitted under section 107D(a)(5), 105C(a)(4), 103A(a)(5), 101A(a)(5), or 201(b)(2), respectively, of the Agricultural Act of 1949, or any gain realized by a producer from repaying a loan for a crop of any other commodity at a lower level established than the original loan level under the Agricultural Act of 1949;

(iv) Any deficiency payment received for a crop of wheat or feed grains under section 107D(c)(1) or 105C(c)(1), respectively, or the Agricultural Act of 1949 as the result of a reduction of the loan level for such crop under section 107D(a)(4) or 105C(a)(3) of the Agricultural Act of 1949;

(v) Any loan deficiency payment received for a crop of wheat, feed grains, upland cotton, or rice under section 107D(b), 105C(b), 103A(b), or 101A(g), respectively, of the Agricultural Act of 1949; (F) Any inventory reduction payment received for a crop of wheat, feed grains, upland cotton, or rice under section 107D(g), 105C(g), 103A(g), or 101A(g), respectively, of the Agricultural Act of 1949;

(vi) With respect to the Conservation Reserve Program, annual rental payments; and

(vii) With respect to the programs specified in § 1497.1 (a)(4) through (8), all payments.

Permitted entity. A permitted entity is an entity designated annually by an individual or other entity which is to receive a payment, loan, or benefit under a program specified in § 1497.1.

Person. (1) A person is:

(i) An individual, including any individual participating in a farming operation as a partner in a general partnership, a participant in a joint venture, or a participant in a similar entity;

(ii) A corporation, joint stock company, association, limited partnership, irrevocable trust, revocable trust together with the grantor of the trust, estate, or charitable organization, including any such entity or organization particpating in the farming operation as a partner in a general partnership, a participant in a joint venture, a grantor of a revocable trust, or as a participant in similar entity; and

(iii) A State, political subdivision, or agency thereof.

(2) In order to be considered a separate person for the purposes of this part, in addition to other provisions of this part, the individual or entity must:

(i) Have a separate and distinct interest in the land or the crop involved;

(ii) Exercise separate responsibility for such interest; and

(iii) Be responsible for the cost of farming related to such interest from a fund or account separate from that of any other individual or entity.

(3) Any cooperative association of producers that markets commodities for producers with respect to the commodities so marketed for producers shall not be considered to be a person.

Public school. A public school is a primary, elementary, or secondary school supported by public funds and does not include a college or university.

Sharecropper. An individual who farms and receives a specified share of the crop produced on the farm in total payment for such individual's labor.

Significant contribution. A significant contribution is the provision of the following to a farming operation by an individual or entity;

(1)(i) If either land, capital, or equipment is contributed by an individual or entity, such contribution must have a value which is equal to at least 50 percent of the individual's or entity's commensurate share of the total value of the capital or the total rental value of either the land or equipment necessary to conduct the farming operation; or

(ii) If the contribution by an individual or entity consists of any combination of land, capital, and equipment, such combined contribution must have a value which is equal to 30 percent of the individual's or entity's commensurate share of the total value of the farming operation; and

(2) Active personal management or active personal labor in an amount which is the smaller of:

(i) 1,000 hour per calendar year; or

(ii) 50 percent of the total hours which would be required to conduct a farming operation which is comparable in size to such individual's or entity's commensurate share in the farming operation.

Substantial beneficial interest. A substantial beneficial interest in any entity is an interest of 10 percent or more. In determining whether such an interest equals at least 10 percent, all interests in the entity which are owned by an individual or entity directly or indirectly through such means as ownership of a corporation which owns the entity shall be taken into consideration. In order to ensure that the provisions of this part are not circumvented by an individual or entity, the Deputy Administrator may determine that an ownership interest requirement or less than 10 percent shall be applied to such individual or entity.

Total value of the farming operation. The total value of the farming operation is the total of the costs, excluding the value of active personal labor and active personal management which is contributed by a person who is a member of the farming operation, needed to carry out the farming

operation for the year for which the determination is made.

§ 1497.4 Timing for determination status of persons.

(a) Except as otherwise set forth in this part, the status of an individual or entity on April 1 of the current year, or such other date as may be determined and announced by the Deputy Administrator, shall be the basis on which determinations are made in accordance with this part for the year in which the determination is made.

(b) Actions taken by an individual or entity after April 1, or such other date as determined and announced by the Deputy Administrator, but on or before the final harvest date as determined by the Deputy Administrator which is to be normal for the area for the applicable program crop, shall not be used to determine whether there has been an increase the number of persons for the current year. Actions taken by a person after April 1, or such other date as may be determined and announced by the Deputy Administrator, but on or before the harvest of the last program crop in the area, shall be used to determine whether there has been a decrease in the number of persons for the current year.

§ 1497.5 Limitation on the number of entities through which an individual or entity may receive a payment and required notification.

(a) An individual or entity shall receive a payment under a program specified in § 1497.1 either directly or indirectly from no more than three permitted entities. An individual or entity which receives such a payment shall notify the county committee in the county in which they maintain a farming operation whether or not the farming operation is to be considered a permitted entity. An individual shall only receive such payments as a result of a farming operation conducted by:

(1) The individual and by no more than two entities in which the individual holds a substantial beneficial interest; or

(2) No more than three entities in which the individual holds a substantial beneficial interest.

(b) Each entity entering into a contract or agreement under a program specified in § 1497.1 shall, by date the contract or agreement is submitted to the county committee, notify in writing:

(1) Each individual or other entity that acquires or holds an interest in such entity of the requirements and limitations provided in this part; and

(2) The county committee of the name and social security number of each individual and the name and taxpayers identification number of each entity that holds or acquires a substantial beneficial interest in such entity.

(c)(1) An individual or entity that holds a substantial beneficial interest in more than the number of permitted entities specified in paragraph (a) of this section for which a contract or agreement has been submitted to the county committee shall notify the county committee, in each county in which they conduct a farming operation, in writing of those entities that shall be considered as permitted entities by no later than 15 days following the date the contract or agreement was submitted to the county committee, or such other date as may be determined and announced by the Deputy Administrator.

(2) The remaining entities in which the individual or entity holds a substantial beneficial interest shall be subject to reductions in the payments earned by the remaining entity. Such a reduction shall be made in an amount that bears the same relationship to the full payment that the individual's interest in the entity bears to all interest in the entity.

(d) If an individual or entity fails to make such a notification as specified in paragraph (c) of this section, all entities in which the individual or entity holds a substantial beneficial interest shall be subject to a reduction in payments in the manner specified in paragraph (c)(1) of this section.

§ 1497.6 General provisions for determining whether an individual or entity is actively engaged in farming.

(a) To be considered a person who is eligible to receive payments with respect to a particular farming operation, a person must be an individual or entity actively engaged in farming with respect to such operation.

(b) Actively engaged in farming means, except as otherwise provided in this part, that the individual, shareholder, beneficiary, or entity, independently makes a significant contribution to a farming operation, of:

(1) Capital, equipment, or land; and

(2) Active personal labor or active personal management.

(c) In determining if the individual or entity is actively contributing a significant amount of active personal labor or active personal management the following factors shall be taken into consideration:

(1) The types of crops produced by the farming operation;

(2) The normal and customary farming practices of the area; and

(3) The total amount of hours which are necessary to provide adequate personal management and personal labor for such a farming operation.

(d) In order to be considered to be actively engaged in farming an individual or entity specified in §§ 1497.6 through 1497.16 must have:

(1) A share of the profits or losses from the farming operation which is commensurate with the individual's or entity's contribution to the operation; and

(2) Contributions to the farming operation which are at risk.

§ 1497.7 Individuals.

An individual shall be considered to be actively engaged in farming with respect to a farming operation if the individual makes a significant contribution of:

(a) Capital, equipment, or land; and

(b) Active personal labor or active personal management.

§ 1497.8 Joint operations.

(a) Members of a general partnership, joint venture, or similar entity (herein referred to as "joint operation"), must furnish satisfactory evidence that their contributions of land, labor, management, equipment, or capital to the joint operation are commensurate with their claimed shares of the proceeds.

(b) If a joint operation separately makes a significant contribution of capital, equipment, or land, and the joint operation meets the provisions of § 1497.6(d), the members of the joint operation who make a significant contribution of active personal labor or active personal management to the farming operation shall be considered to be actively engaged in farming with respect to such farming operation.

(c) Each individual who shares in the proceeds derived by such farming operation shall not be considered to be a separate person unless the individual is actively engaged in the farming operation.

§ 1497.9 Limited partnership and corporations.

(a) A limited partnership or corporation shall be considered to be actively engaged in farming with respect to a farming operation if:

(1) The entity separately makes a significant contribution to the farming operation of capital, equipment, or land; and

(2) The partners or stockholders make a significant contribution of active personal labor or active personal management to the farming operation. The combined beneficial interest of all the partners or stockholders providing

active personal labor or active personal management must exceed 50 percent.

(b) A limited partnership or corporation shall be considered to be a person separate from an individual partner or stockholder except that a limited partnership or corporation in which more than 50 percent of the interest in such limited partnership or corporation is owned by an individual (including the interest owned by the individual's spouse, minor children, and trusts for the benefit of such minor children) or by an entity shall not be considered as a separate person from such individual or entity.

(c) If the same two or more individuals, limited partnerships, corporations, or other entities own more than 50 percent of the interest in each of two or more limited partnerships or corporations engaged in farming, all such limited partnerships or corporations shall be considered to be one person.

(d) The percentage share of the value of the interest in a limited partnership or corporation which is owned by an individual or other entity shall be determined as of April 1 or such other date as may be determined and announced by the Deputy Administrator. If a partner or stockholder acquires an interest in the limited partnership or corporation after such date, and before the harvest of the last program crop in the area as determined by the Deputy Administrator, the amount of any such interest shall be included in determining the percentage share of such value.

(e) Where there is only one class of stock or other similar unit of ownership, an individual's or entity's percentage share of the limited partnership or corporation shall be based upon the value of the outstanding stock or other similar unit of ownership. If the limited partnership or corporation has more than one class of stock or other unit of ownership, the percentage share of the limited partnership or corporation owned by an individual or entity shall be determined by the Deputy Administrator on the basis of market quotations. If market quotations are lacking or are too scarce to be recognized, such percentage share shall be determined by the Deputy Administrator on the basis of all relevant factors affecting the fair market value of such stock or other unit of ownership, including the various rights and privileges which are attributed to each such class.

§ 1497.10 Irrevocable trusts.

(a) An irrevocable trust shall be considered to be actively engaged in farming with respect to a farming operation if:

(1) The entity separately makes a significant contribution to the farming operation of capital, equipment or land; and

(2) The beneficiaries make a significant contribution of active personal labor or active personal management to the farming operation.

(b) An irrevocable trust shall be considered to be a person separate from the individual beneficiaries of the trust except that an irrevocable trust which has a sole beneficiary shall not be considered to be a separate person from such beneficiary.

(c) Where two or more irrevocable trusts have common beneficiaries (including a spouse and minor children) with more than 50 percent interest, all such trust shall be considered to be one person.

§ 1497.11 Revocable trusts.

(a) A revocable trust shall be considered to be actively engaged in farming with respect to a farming operation if:

(1) The entity separately makes a significant contribution to the farming operation of capital, equipment, or land; and

(2) The beneficiaries make a significant contribution of active personal labor or active personal management to the operation.

(b) A grantor and the revocable trust shall be considered to be one person.

§ 1497.12 Estates.

(a) An estate shall be considered to be actively engaged in farming if the estate makes a significant contribution of capital, equipment, or land and the personal representative or heirs of the estate make a significant contribution of active personal labor or active personal management.

(b) If the deceased individual would have been considered to be one person with respect to an heir, the estate shall also be considered to be one person with such heir.

§ 1497.13 Landowners.

A person who is a landowner contributing owned land to the farming operation shall be considered to be actively engaged in farming if the landowner receives rent or income for such use of the land based on the land's production or the operation's operating results.

§ 1497.14 Family members.

With respect to a farming operation conducted by individuals, a majority of whom are family members, an adult family member who makes a significant contribution of active personal management or active personal labor, shall be considered to be actively engaged in farming.

§ 1497.15 Sharecroppers.

A sharecropper who makes a significant contribution of active personal labor to the farming operation shall be considered to be actively engaged in farming.

§ 1497.16 Cash rent tenants.

Any tenant that conducts a farming operation in which the tenant rents the land for cash, shall be considered to be the same person as the landlord unless the tenant makes a significant contribution to the farming operation of:

(a) Active personal labor and capital, land or equipment; or

(b) Active personal management and equipment, and such equipment used in the farming operation is not leased from the landowner.

§ 1497.17 Persons not considered to be actively engaged in farming.

An individual or entity who does not meet any of the provisions of §§ 1497.6 through 1497.16 and a landlord who cash rents land to a farming operation shall not be considered to be actively engaged in farming.

§ 1497.18 Changes in farming operations.

(a) Any change in a farming operation that would increase the number of persons must be bona fide and substantive. The addition of a family member to a farming operation in accordance with § 1497.14 shall be considered to be such a change, except that such an addition will not affect the status of any other individual or entity which is added to the farming operation. A change in a farming operation in a previous year that was not considered to be bona fide and substantive shall not increase the number of persons in a subsequent year. If bona fide, the following shall be considered to be substantive changes in the farming operation:

(1) With respect to a landowner only, a change from a cash rent to a share rent; and

(2) An increase through the acquisition of land not previously involved in the farming operation of approximately 20 percent or more in the total cropland involved in the farming operation if such cropland has crop acreage bases which are normal for the area.

(b) In order to provide for the orderly restructuring of a farming operation such as the dissolution of a corporation or

other similar entity, the Deputy Administrator may determine other bona fide changes to be a substantive change.

§ 1497.19 Husband and wife.

With respect to any married couple, the husband and wife shall be considered to be one person except that any married couple who, prior to their marriage, were separately engaged in unrelated farming operations each spouse will be determined to be a separate person with respect to such farming operation so long as the operation remains separate and distinct from any farming operation conducted by the other spouse.

§ 1497.20 Minor children.

(a) Except as provided in paragraph (b) of this section, a minor, including a minor who is the beneficiary of a trust or who is an heir of an estate, and the parent or any court-appointed person such as a guardian or conservator who is responsible for the minor shall be considered to be one person.

(b) A minor may be considered to be a separate person if the minor is a producer on a farm in which the parent or any court-appointed person such as a guardian or conservator who is responsible for the minor, including any entity in which a parent of such person has a substantial beneficial interest, owns no interest in the farm or in any production from the farm and the minor:

(1) Has established and maintains a separate household from the minor's parents or any court-appointed person such as a guardian or conservator who is responsible for the minor and such minor pesonally carries out the farming activities with respect to a farming operation for which there is a separate accounting; or

(2) Does not live in the same household as such minor's parent and:

(i) Is represented by a court-appointed guardian or conservator who is responsible for the minor; and

(ii) Ownership of the farm is vested in the minor.

(c) A person shall be considered to be a minor until the age 18 is reached. Court proceedings conferring majority on a person under 18 years of age will not change such person's status as a minor.

§ 1497.21 Charitable organizations.

Charitable organizations, including a club, society, fraternal or religious organization, shall be considered to be a separate person to the extent that such an entity is engaged in the production of crops as a separate person except where the land or the proceeds from the farming operation may revert to an entity which exercises control or authority over such organization.

§ 1497.22 Indian tribal ventures.

Payments may be made in excess of an applicable payment limitation provision with respect to land which is owned and not rented or otherwise acquired by an Indian tribal venture if a responsible official of the Bureau of Indian Affairs (BIA) or the Indian tribal council certifies that no payment in excess of such limitation will accrue directly or indirectly to any individual Indian, including the individual's spouse and minor children.

§ 1497.23 States, political subdivisions, and agencies thereof.

A State, political subdivision and agencies thereof shall be considered to be one person.

§ 1497.24 Scheme or device.

(a) All or any part of the payment otherwise due a person on all farms in which the person has an interest may be withheld or be required to be refunded if the person adopts or participates in adopting a scheme or device which is designed to evade this part or which has the effect of evading this part. Such acts shall include, but are not limited to:

(1) Concealing information which affects the application of this part;

(2) Submitting false or erroneous information; or

(3) Creating fictitious entities for the purpose of concealing the interest of a person in a farming operation.

(b) If the Deputy Administrator determines that any person has adopted a scheme or device to evade, or that has the purpose of evading, the provisions of sections 1001 1001A, or 1001C of the Food Security Act of 1985 such person shall be ineligible to receive payments under the programs specified in § 1497.1(a) (1) through (3) with respect to the year for which such scheme or device was adopted and the succeeding year.

§ 1497.25 Joint and several liability.

If two or more individuals or entities are considered to be one person and either receives a payment in excess of the applicable payment limitation provision, such individuals or entities shall be jointly and severally liable for the liability which arises therefrom. The provisions of this section shall be applicable in addition to any liability which arises under a criminal or civil statute.

§ 1497.26 Equitable adjustments.

(a) Actions taken by an individual or an entity in good faith on action or advice of an authorized representative of the Deputy Administrator may be accepted as meeting the requirements of this part to the extent the Deputy Administrator deems necessary in order to provide fair and equitable treatment to such individual or entity.

(b) In cases in which the application of this part will reduce payments to a farming operation, the Deputy Administrator may waive the application of the provisions of § 1497.18 with respect to any reorganization applied for prior to April 1, 1989, or such other date as may be determined and announced by the Deputy Administrator, to the extent the Deputy Administrator determines appropriate to facilitate equitable reorganizations that do not result in an increase in payments.

§ 1497.27 Appeals.

(a) Any person may obtain reconsideration and review of determinations made under this part in accordance with the appeal regulations set forth at Part 780 of this title. With respect to such appeals, the applicable reviewing authority shall:

(1) Schedule a hearing with respect to the appeal within 45 days following receipt of the written appeal; and

(2) Issue a determination within 60 days following the hearing.

(b) The time limitations provided in paragraph (a) of this section shall not apply if:

(1) The appellant, or the appellant's representative, requests a postponement of the scheduled hearing;

(2) The appellant, or the appellant's representative, requests additional time following the hearing to present additional information or a written closing statement;

(3) The appellant has not timely presented information to the reviewing authority; or

(4) An investigation by the Office of Inspector General is ongoing or a court proceeding which affects the amount of payments a person may receive is involved.

(c) If the deadlines provided in paragraphs (a) and (b) of this section are not met, the relief sought by the producer's appeal will be granted for the applicable crop year unless the Deputy Administrator determines that the producer did not follow the farm operating plan which was presented initially to the county committee for the year which is the subject of the appeal.

(d) An appellant may waive the provisions of paragraphs (a) and (b) of this section.

§ 1497.28 Paperwork Reduction Act assigned number.

The information collection requirements contained in this part have been approved by the Office of Management and Budget under the provisions of 44 U.S.C. Chapter 35 and have been assigned OMB control number 0560-0096.

2. A new Part 1498 is added to read as follows:

PART 1498—FOREIGN PERSONS INELIGIBLE FOR PROGRAM BENEFITS

Sec.

1498.1 Applicability.
1498.2 Administration.
1498.3 Definitions.
1498.4 Ineligibility.
1498.5 Notification.
1498.6 Scheme or device.
1498.7 Equitable relief.
1498.8 Appeals.
1498.9 Paperwork Reduction Act assigned number.

Authority: Section 1001C of the Food Security Act of 1985, as amended, AA Stat. 1444, as amended, (7 U.S.C. 1308, *et seq.*).

§ 1498.1 Applicability.

This part is applicable to any type of payment, loan, and benefit made with respect to 1989 and 1990 crops. This part is not applicable to any payment, loan, and benefit which is made with respect to the production of a crop of a commodity planted, or commodity program or Conservation Reserve Program contract approved before December 22, 1987.

§ 1498.2 Administration.

(a) The regulations in this part will be administrated under the general supervision and direction of the Executive Vice President, CCC, and the Administrator, ASCS. In the field, the regulations in this part will be administered by the Agricultural Stabilization and Conservation State and county committees (herein referred to as "State and county committees", respectively). State and county executive directors and State and county committees do not have authority to modify or waive any of the provisions of this part.

(b) The State committee may take any action authorized or required by this part to be taken by the county committee which has not been taken by such committee. The State committee may also:

(1) Correct or require a county committee to correct any action taken by such county committee which is not in accordance with this part; or

(2) Require a county committee to withhold taking any action which is not in accordance with this part.

(c) No delegation herein to a State or county committee shall preclude the Executive Vice President, CCC, and the Administrator, ASCS, or a designee, from determining any question arising under this part or from reversing or modifying any determination made by a State or county committee.

§1498.3 Definitions.

(a) The terms defined in Part 719 of this title shall be applicable to this part and all documents issued in accordance with this part, except as otherwise provided in this section.

(b) The following definitions shall be applicable to this part:

Active personal labor. Active personal labor is providing physical activities involved in land preparation, planting, cultivating, and harvesting of agricultural commodities in the farming operation, or where applicable, providing physical activities required to establish and maintain conserving cover crops or conserving use acreages.

Capital. Capital consists of the funding provided by an individual or entity to the farming operation in order for such operation to conduct farming activities. In determining whether an individual or entity has contributed capital to the farming operation such capital must have been derived from a fund or account separate and distinct from that of any other individual or entity involved in such operation. Capital does not include the value of any labor or management which is contributed to the farming operation. A capital contribution may be a direct out-of-pocket input of a specified sum or an amount borrowed by the individual or entity. With respect to a farming operation which consists of more than one individual or entity, such capital must be contributed directly by the individual or entity and must not be acquired as a result of a loan made to:

(1) The farming operation in which the individual or entity has an interest;

(2) Such individual, entity, or farming operation by the farming operation or any of its members, beneficiaries or related entities; or

(3) Such individual, entity, or farming operation, which was guaranteed or secured by the farming operation or any of its members, beneficiaries or related entities.

Entity. An entity is a corporation, joint stock company, association, limited partnership, irrevocable trust, revocable trust, estate, charitable organization, or other similar entity including any such organization participating in the farming operation as a partner in a general partnership, a participant in a joint venture, a grantor of a revocable trust, or as a participant in a similar organization.

Land. Land is cropland with normal crop acreage bases for the farming area. With respect to a farming operation which consists of more than one individual or entity, any land contributed to the farming operation by an individual or entity must be contributed directly by the individual or entity and not acquired as a result of a loan made to:

(1) The farming operation in which the individual or entity has an interest;

(2) Such individual, entity, or farming operation by the farming operation or any of its members, beneficiaries or related entities; or

(3) Such individual, entity, or farming operation, which was guaranteed or secured by the farming operation or any of its members, beneficiaries or related entities.

Lawful alien. Lawful alien means an alien lawfully admitted into the United States for permanent residence under the Immigration and Nationality Act.

Payment, loan, and benefit. Payment, loan and benefit means a payment, loan, or benefit made in accordance with the Agricultural Act of 1949, the Commodity Credit Corporation Charter Act, or Subtitle D of Title XIII of the Food Security Act of 1985, which results in a direct expenditure by the Commodity Credit Corporation or any other agency of the Federal Government, including a payment made in accordance with Part 770 of this title. Such term does not include the establishment of crop acreage bases, farm program payment yields, acreage allotments, marketing quotas, and similar program provisions.

Person. A person is:

(1) An individual, including any individual participating in a farming operation as a partner in a general partnership, a participant in a joint venture, or a participant in a similar entity; and

(2) A corporation, joint stock company, association, limited partnership, irrevocable trust, revocable trust together with the grantor of the trust, estate, charitable organization, or other similar entity, including any such entity or organization participating in the farming operation as a partner in a general partnership, a participant in a joint venture, a grantor of a revocable trust, or as a participant in a similar entity.

Substantial amount of active personal labor. Substantial amount of active personal labor means the provision of active personal labor in an amount which is the smaller of:

(1) 1,000 hours per calendar year; or

(2) 50 percent of the total hours which would be required to conduct a farming operation which is comparable in size to such individual's or entity's commensurate share in the farming operation.

§ 1498.4 Ineligibility.

(a) Any person who is not a citizen of the United States or a lawful alien shall be ineligible to receive payments, loans and benefits, with respect to any commodity produced, or land set aside from production, on a farm that is owned or operated by such person unless such person is an individual who is providing land, capital, and a substantial amount of active personal labor in the production of crops on such farm.

(b)(1) A corporation or other entity shall be ineligible to receive payments, loans, and benefits if more than 10 percent of the beneficial ownership of the entity is held by persons who are not citizens of the United States or lawful aliens unless such persons provide a substantial amount of active personal labor in the production of crops on a farm owned by such an entity. However, upon the written request of the entity, the Deputy Administrator may make payments in an amount determined by the Deputy Administrator to be representative of the percentage interest of the entity which is owned by citizens of the United States and lawful aliens.

(2) In determining whether more than 10 percent of the beneficial ownership of an entity is held by such persons, the beneficial ownership interest shall be the higher of the amount of such interest on:

(i) The date the applicable program contract or agreement is executed by the entity; or

(ii) Any other date prior to the final harvest date which is determined and announced by the Deputy Administrator to be normal in the area for the applicable program crop.

(3) A corporation or other entity shall inform the county committee of any increase in such ownership which occurs after the applicable program contract or agreement is executed.

(4) In the event of an increase in such ownership after a payment, loan, and benefit has been made, the entity shall refund such payment, loan, and benefit.

(5) Where there is only one class of stock or other similar unit of ownership, an individual's or entity's percentage share of a limited partnership or corporation shall be based upon the value of the outstanding stock or other similar unit of ownership. If the limited partnership or corporation has more than one class of stock or other unit of ownership, the percentage share of the limited partnership or corporation owned by an individual or entity shall be determined by the Deputy Administrator on the basis of market quotations. If market quotations are lacking or are too scarce to be recognized, such percentage share shall be determined by the Deputy Administrator on the basis of all relevant factors affecting the fair market value of such stock or other unit of ownership, including the various rights and privileges which are attributed to each such class.

(c) A citizen of the United States, lawful alien, and entity which is not subject to this part who is in lawful possession, through a lease or otherwise, of a farm owned by an individual or entity who is subject to this part or who is successor-in-interest to a program contract or agreement with respect to such a farm may receive a payment, loan, and benefit without regard to this part.

§ 1498.5 Notification.

Any entity, whether foreign or domestic, must provide written notification to the county committee or other party who executes the program contract or agreement under which a payment, loan, and benefit is made if any individual or entity who, in accordance with § 1498.4 would be ineligible to receive a payment, loan, and benefit, directly or indirectly holds more than a 10 percent beneficial interest in such entity. Such entity must also furnish the names, social security number, and tax identification number of each individual and entity with a substantial beneficial interest which exceeds this amount. The failure of the entity to provide this information will result in the ineligibility of the entity to receive any payment, loan, and benefit.

§ 1498.6 Scheme or device.

(a) All or any part of the payment otherwise due a person on all farms in which the person has an interest may be withheld or be required to be refunded if the person adopts or participates in adopting a scheme or device which is designed to evade this part or which has the effect of evading this part. Such acts shall include, but are not limited to, concealing information which affects the application of this part. Submitting false or erroneous information, or creating any fictitious entity for the purpose of concealing the interest of a person in a farming operation.

(b) If the Deputy Administrator determines that any person has adopted a scheme or device to evade, or that has the purpose of evading, the provisions of section 1001, 1001A, or 1001C, of the Food Security Act of 1985, such person shall be ineligible to receive payments under the programs specified in § 1497.1(a) (1) through (3) with respect to the year for which such scheme or device was adopted and the succeeding year.

§ 1498.7 Equitable relief.

Actions taken by an individual or an entity in good faith on action or advice of an authorized representative of the Deputy Administrator may be accepted as meeting the requirements of this part to the extent the Deputy Administrator deems necessary in order to provide fair and equitable treatment to such individual or entity.

§ 1498.8 Appeals.

Any person may obtain reconsideration and review of determinations made under this part in accordance with the appeal regulations set forth as Part 780 of this title.

§ 1498.9 Paperwork Reduction Act assigned number.

The information collection requirements contained in this part have been approved by the Office of Management and Budget under the provisions of 44 U.S.C. Chapter 35 and have been assigned OMB control number 0560–0096.

Signed at Washington, DC on April 1, 1988.

Vern Neppl,

Acting Executive Vice President, Commodity Credit Corporation and Administrator, Agricultural Stabilization and Conservation Service.

[FR Doc. 88–7567 Filed 4–4–88; 10:02 am]

BILLING CODE 3410-05-M

Reader Aids

Federal Register

Vol. 53, No. 66

Wednesday, April 6, 1988

INFORMATION AND ASSISTANCE

Federal Register

Index, finding aids & general information	523-5227
Public inspection desk	523-5215
Corrections to published documents	523-5237
Document drafting information	523-5237
Machine readable documents	523-5237

Code of Federal Regulations

Index, finding aids & general information	523-5227
Printing schedules	523-3419

Laws

Public Laws Update Service (numbers, dates, etc.)	523-6641
Additional information	523-5230

Presidential Documents

Executive orders and proclamations	523-5230
Public Papers of the Presidents	523-5230
Weekly Compilation of Presidential Documents	623-5230

The United States Government Manual

General information	523-5230

Other Services

Data base and machine readable specifications	523-3408
Guide to Record Retention Requirements	523-3187
Legal staff	523-4534
Library	523-5240
Privacy Act Compilation	523-3187
Public Laws Update Service (PLUS)	523-6641
TDD for the deaf	523-5229

FEDERAL REGISTER PAGES AND DATES, APRIL

10519-10868.....1
10869-11030.....4
11031-11238.....5
11239-11486.....6

CFR PARTS AFFECTED DURING APRIL

At the end of each month, the Office of the Federal Register publishes separately a List of CFR Sections Affected (LSA), which lists parts and sections affected by documents published since the revision date of each title.

3 CFR

Executive Orders:
12634.....11041

Administrative Orders:
Memorandums:
Mar. 31, 1988.....11039

Proclamations:
5784.....10519
5785.....10521
5786.....10523
5787.....11031

5 CFR

Proposed Rules:
2431.....10885

7 CFR

300.....10525
400.....10526
910.....10527
946.....11043
1421.....11239

Proposed Rules:
6.....11091
53.....10545
54.....10545
449.....11299
949.....10887
1030.....10894
1106.....11092
1497.....11474
1498.....11474
1530.....11098
1701.....10545

8 CFR

Proposed Rules:
3.....11300
208.....11300
236.....11300
242.....11300
253.....11300

9 CFR

92.....11043

10 CFR

430.....10869
1010.....11240

Proposed Rules:
2.....11310
50.....11311

12 CFR

202.....11044
205.....11046
226.....11047, 11055
563.....11242, 11243

14 CFR

Ch. III.....11004
39.....11246
71.....10528, 11020, 11060, 11061
97.....11062

Proposed Rules:
27.....10826, 11162
29.....10826, 11162
71.....10546, 11100, 11101
73.....11102

16 CFR

13.....11247

21 CFR

184.....11247
520.....11063
522.....11064
524.....11064
558.....11065, 11251
800.....11251
803.....11251
807.....11251
808.....11251
809.....11251
812.....11251
813.....11251
820.....11251
860.....11251
861.....11251
864.....11251
866.....11251
876.....11251
895.....11251
1002.....11251
1005.....11251
1010.....11251
1020.....11251
1030.....11251
1040.....11251
1050.....11251
1308.....10834, 10861, 10869

Proposed Rules:
133.....11312
175.....11402
176.....11402
177.....11402
178.....11402
561.....11313

22 CFR

514.....10528
602.....10529

23 CFR

650.....11065
771.....11065
1204.....11255
1205.....11255

24 CFR

50.....11224
200.....11270

203 10529
221 11224
236 11224
241 11224
248 11224
Proposed Rules:
35 11164
200 11164
510 11164
511 11164
570 11164
882 11164
886 11164
941 11164
965 11164
968 11164

25 CFR

61 11271

26 CFR

1 ..... 11002, 11066, 11162
602 ..... 11066, 11162
Proposed Rules:
1 11103

28 CFR

0 ..... 10870, 10871

29 CFR

102 10872
1910 11414
2610 10530
2622 10530
2644 10531

30 CFR

75 11395
250 10596
256 10596

32 CFR

388 10876

33 CFR

84 10532
117 ..... 10533, 10534
Proposed Rules:
110 11395

34 CFR

600 11208
657 10820
668 11208
Proposed Rules:
105 10808

40 CFR

52 ..... 11068, 11273
180 ..... 11071, 11274
Proposed Rules:
52 11314
180 10895
761 11104
763 10546
796 11104

43 CFR

Proposed Rules:
3160 11318
Public Land Order:
6670 10535

44 CFR

80 11275
82 11275
83 11275
Proposed Rules:
61 10547

45 CFR

36 11279
Proposed Rules:
606 10896

46 CFR

572 11072
Proposed Rules:
Ch. I 11440

47 CFR

2 10878
Proposed Rules:
Ch. I 10549, 10550
73 10905

48 CFR

15 10828
31 10828
52 10828
215 11073
227 10780
242 11073
252 ..... 10780, 11073
Proposed Rules:
916 11318
931 11318
952 11318

49 CFR

533 11074
571 11280
1160 10536
Proposed Rules:
171 11320
173 11320
192 10906
571 11105

50 CFR

17 10879
301 10536
672 11297
Proposed Rules:
644 11321

LIST OF PUBLIC LAWS

Last List April 5, 1988

This is a continuing list of public bills from the current session of Congress which have become Federal laws. It may be used in conjunction with "P L U S" (Public Laws Update Service) on 523-6641. The text of laws is not published in the **Federal Register** but may be ordered in individual pamphlet form (referred to as "slip laws") from the Superintendent of Documents, U.S. Government Printing Office, Washington, DC 20402 (phone 202-275-3030).

H.J. Res. 523/Pub. L. 100-276

To provide assistance and support for peace, democracy, and reconciliation in Central America. (Apr. 1, 1988; 102 Stat. 62; 5 pages) Price: $1.00