6-7-90
Vol. 55 No. 110
Pages 23183-23418

federal register

Thursday
June 7, 1990

Briefings on How To Use the Federal Register
For information on briefings in Minneapolis, MN and Kansas City, MO and Washington, DC, see announcement on the inside cover of this issue.

FEDERAL REGISTER Published daily, Monday through Friday, (not published on Saturdays, Sundays, or on official holidays), by the Office of the Federal Register, National Archives and Records Administration, Washington, DC 20408, under the Federal Register Act (49 Stat. 500, as amended; 44 U.S.C. Ch. 15) and the regulations of the Administrative Committee of the Federal Register (1 CFR Ch. I). Distribution is made only by the Superintendent of Documents, U.S. Government Printing Office, Washington, DC 20402.

The **Federal Register** provides a uniform system for making available to the public regulations and legal notices issued by Federal agencies. These include Presidential proclamations and Executive Orders and Federal agency documents having general applicability and legal effect, documents required to be published by act of Congress and other Federal agency documents of public interest. Documents are on file for public inspection in the Office of the Federal Register the day before they are published, unless earlier filing is requested by the issuing agency.

The seal of the National Archives and Records Administration authenticates this issue of the **Federal Register** as the official serial publication established under the Federal Register Act. 44 U.S.C. 1507 provides that the contents of the **Federal Register** shall be judicially noticed.

The **Federal Register** will be furnished by mail to subscribers for $340 per year in paper form; $195 per year in microfiche form; or $37,500 per year for the magnetic tape. Six-month subscriptions are also available at one-half the annual rate. The charge for individual copies in paper or microfiche form is $1.50 for each issue, or $1.50 for each group of pages as actually bound, or $175.00 per magnetic tape. Remit check or money order, made payable to the Superintendent of Documents, U.S. Government Printing Office, Washington, DC 20402, or charge to your GPO Deposit Account or VISA or Mastercard.

There are no restrictions on the republication of material appearing in the **Federal Register**.

How To Cite This Publication: Use the volume number and the page number. Example: 55 FR 12345.

SUBSCRIPTIONS AND COPIES

PUBLIC

Subscriptions:

Paper or fiche	202-783-3238
Magnetic tapes	275-3328
Problems with public subscriptions	275-3054

Single copies/back copies:

Paper or fiche	783-3238
Magnetic tapes	275-3328
Problems with public single copies	275-3050

FEDERAL AGENCIES

Subscriptions:

Paper or fiche	523-5240
Magnetic tapes	275-3328
Problems with Federal agency subscriptions	523-5240

For other telephone numbers, see the Reader Aids section at the end of this issue.

THE FEDERAL REGISTER

WHAT IT IS AND HOW TO USE IT

FOR: Any person who uses the Federal Register and Code of Federal Regulations.

WHO: The Office of the Federal Register.

WHAT: Free public briefings (approximately 3 hours) to present:

1. The regulatory process, with a focus on the Federal Register system and the public's role in the development of regulations.
2. The relationship between the Federal Register and Code of Federal Regulations.
3. The important elements of typical Federal Register documents.
4. An introduction to the finding aids of the FR/CFR system.

WHY: To provide the public with access to information necessary to research Federal agency regulations which directly affect them. There will be no discussion of specific agency regulations.

MINNEAPOLIS, MN

WHEN: June 18, at 1:00 p.m.,
WHERE: Bishop Henry Whipple Federal Building, Room 570, Ft. Snelling, MN.
RESERVATIONS: 1-800-366-2998.

KANSAS CITY, MO

WHEN: June 19, at 9:00 a.m.,
WHERE: Federal Building, 601 East 12th Street, Room 110, Kansas City, MO.
RESERVATIONS: 1-800-735-8004.

WASHINGTON, DC

WHEN: June 28, at 9:00 a.m.,
WHERE: Office of the Federal Register, First Floor Confernce Room, 1100 L Street NW., Washington, DC.
RESERVATIONS: 202-523-5240.

Contents

Federal Register
Vol. 55, No. 110
Thursday, June 7, 1990

Advisory Council on Historic Preservation
See Historic Preservation, Advisory Council

Agricultural Marketing Service
RULES
Filberts/hazelnuts grown in Oregon and Washington, 23185
PROPOSED RULES
Filberts/hazelnuts grown in Oregon and Washington, 23205

Agriculture Department
See also Agricultural Marketing Service; Forest Service
NOTICES
Agency information collection activities under OMB review, 23255

Centers for Disease Control
NOTICES
Airborne diesel exhaust particulates; NIOSH meeting, 23297
Grants and cooperative agreements; availability, etc.:
Acquired Immunodeficiency Syndrome (AIDS) and human immunodeficiency virus prevention (HIV)—
Education programs; written materials, pictorials, audiovisuals, etc.; content requirements, 23414
Blood lead measurement in childhood lead poisoning screening programs, 23298
Chlorinated aromatic compounds, etc.; evaluation and commercialization, 23298

Civil Rights Commission
NOTICES
Meetings; State advisory committees:
Florida, 23257

Coast Guard
RULES
Drawbridge operations:
California, 23202
Ports and waterways safety:
Ohio River, KY; restricted area, 23202
Regattas and marine parades:
Cajun Offshore Grand Prix, 23201
Sheboygan Independence Day Celebration, 23200
PROPOSED RULES
Ports and waterways safety:
Lower Narragansett Bay, RI; safety zone, 23250
NOTICES
Meetings:
Lower Mississippi River Waterway Safety Advisory Committee, 23340

Commerce Department
See International Trade Administration; Minority Business Development Agency; National Oceanic and Atmospheric Administration

Commodity Futures Trading Commission
NOTICES
Contract market proposals:
Chicago Board of Trade—
Corn, soybeans, and wheat; correction, 23345

Defense Department
See Navy Department

Employment and Training Administration
NOTICES
Adjustment assistance:
American Electric et al., 23310
Besly Products Corp. et al., 23309
Chrysler Corp., 23311

Energy Department
See also Federal Energy Regulatory Commission
NOTICES
Natural gas exportation and importation:
Union Gas Ltd., 23283

Environmental Protection Agency
PROPOSED RULES
Water pollution control:
Ocean dumping; site designations—
Atlantic Ocean; Canaveral Harbor, FL, 23251
NOTICES
Water pollution; discharge of pollutants (NPDES):
Oil and gas extraction, coastal subcategory—
Louisiana, 23348
Texas, 23378

Executive Office of the President
See Presidential Documents; Trade Representative, Office of United States

Federal Aviation Administration
RULES
Airworthiness directives:
Airbus Industrie, 23187, 23190
(2 documents)
Boeing, 23188
SAAB-Scania, 23189
IFR altitudes, 23191
Standard instrument approach procedures, 23199
Terminal control areas and airport radar service areas; correction, 23191
PROPOSED RULES
Airworthiness directives:
Airbus Industrie, 23218, 23227, 23228
(3 documents)
Bell, 23219
Boeing, 23229
Cessna, 23230
Piper, 23231
Control zones, 23233
Transition areas, 23233
VOR Federal airways and jet routes, 23234

Federal Communications Commission
PROPOSED RULES
Multipoint distribution service, multichannel multipoint distribution service, instructional television fixed service, private operational-microwave fixed service, and cable television relay service; premium video programming over-the-air offered directly into homes, 23254

NOTICES
Common carrier services:
Government and non-government fixed service usage of 932–935 MHz and 941–944 MHz frequency bands; channel listing and application solicitation, 23284
Applications, hearings, determinations, etc.:
Minnesota Christian Broadcasting, Inc., et al., 23287

Federal Deposit Insurance Corporation
RULES
Practice and procedure rules:
Unsafe and unsound banking practices—
Undercapitalized insured depository institutions; brokered deposits acceptance or renewal, prohibitions, 23186
NOTICES
Financial Institutions Reform, Recovery, and Enforcement Act of 1989:
Depository insurance coverage; changes, 23288

Federal Election Commission
NOTICES
Meetings; Sunshine Act, 23344

Federal Emergency Management Agency
NOTICES
Disaster and emergency areas:
Arkansas, 23292
(3 documents)
Missouri, 23292, 23293
(2 documents)
Oklahoma, 23293
Texas, 23293
(3 documents)
Meetings:
Emergency Management Institute Board of Visitors, 23292

Federal Energy Regulatory Commission
NOTICES
Electric rate, small power production, and interlocking directorate filings, etc.:
Alabama Power Co. et al., 23270
Environmental statements; availability, etc.:
Iroquois Gas Transmission System et al., 23272
Long Lake Energy Corp., 23272
Stillwater Hydro Partners, L.P., 23272
Natural gas certificate filings:
Northwest Pipeline Corp. et al., 23273
Applications, hearings, determinations, etc.:
Columbia Gas Transmission Corp., 23280
High Island Offshore System, 23281
Northwest Pipeline Corp., 23281
Pacific Gas Transmission Co., 23281
Panhandle Eastern Pipe Line Corp., 23282
United Gas Pipe Line Co., 23282

Federal Maritime Commission
NOTICES
Agreements filed, etc.; correction, 23345

Federal Reserve System
PROPOSED RULES
Collection of checks and other items and wire transfers of funds (Regulation J):
Fedwire funds transfers, 23208
NOTICES
Committees; establishment, renewal, termination, etc.:
Consumer Advisory Council, 23294
Applications, hearings, determinations, etc.:
Bank South Corp. et al., 23295
Crown National Bancorporation, Inc., 23295
First Financial Bancorp, et al., 23296
Hall, Fred J., et al., 23296

Food and Drug Administration
PROPOSED RULES
Human drugs:
Category II and III ingredients (OTC); tentative final monograph
Corrections, 23235
NOTICES
Medical devices:
Female barrier contraceptive devices also intended to prevent sexually transmitted diseases; premarket testing guidelines; availability, 23299

Forest Service
NOTICES
Environmental statements; availability, etc.:
Red-cockaded woodpecker habitat, AL, et al.; protection and management standards and guidelines, 23255
Rio Grand National Forest, CO, 23256
Tahoe National Forest, CA, 23256

General Services Administration
NOTICES
Environmental statements; availability, etc.:
Juarez/Lincoln Border Station, Laredo, TX, 23297

Health and Human Services Department
See Centers for Disease Control; Food and Drug Administration; Health Care Financing Administration; Health Resources and Services Administration; National Institutes of Health

Health Care Financing Administration
NOTICES
Meetings:
Social Security Advisory Council, 23299

Health Resources and Services Administration
NOTICES
Grants and cooperative agreements; availability, etc.:
Health professions model education projects, 23300

Historic Preservation, Advisory Council
NOTICES
Meetings, 23255

Housing and Urban Development Department
NOTICES
Agency information collection activities under OMB review, 23302, 23303
(2 documents)
Organization, functions, and authority delegations:
Regional Administrators-Regional Housing Commissioners et al.; revocation of authority, 23304
Regional Counsel, 23301

Immigration and Naturalization Service
RULES
Immigration:
Replenishment agricultural workers; temporary resident status, admission or adjustment
Correction, 23345

Organization, functions, and authority delegations:
Service officers; power and duties, etc.
Correction, 23345

Interior Department
See Land Management Bureau; Minerals Management Service; Surface Mining Reclamation and Enforcement Office

Internal Revenue Service
PROPOSED RULES
Income taxes:
Economic performance requirement, 23235

International Trade Administration
NOTICES
Export trade certificates of review, 23257
United States-Canada free-trade agreements; binational panel reviews:
Self-propelled bituminious paving equipment, replacement parts, from Canada; correction, 23259

International Trade Commission
NOTICES
Import investigations:
California pesticide residue initiative; effects on U.S. international trade in agricultural food products, 23307

Interstate Commerce Commission
NOTICES
Railroad services abandonment:
Missouri Pacific Railroad Co., 23307

Justice Department
See also Immigration and Naturalization Service
NOTICES
Pollution control consent judgments:
CSX Transportation, 23308
General Electric Co., 23308

Labor Department
See also Employment and Training Administration; Occupational Safety and Health Administration; Pension and Welfare Benefits Administration
NOTICES
Senior Executive Service:
Performance Review Board; membership, 23309

Land Management Bureau
NOTICES
Meetings:
Lakeview District Multiple Use Advisory Council, 23304
Realty actions; sales, leases, etc.:
Colorado, 23304
Nevada, 23305
Utah, 23306
Survey plat filings:
New Mexico, 23306

Minerals Management Service
PROPOSED RULES
Royalty management:
Outer Continental Shelf net profit share oil and gas leases; records maintenance time period extension, 23248

Minority Business Development Agency
NOTICES
Meetings:
Minority Enterprise Development Advisory Council, 23259

National Communications System
NOTICES
Federal telecommunications standards:
HF radio systems employing Automatic Link Establishment (ALE) waveforms; link protection and data security concept development and verification testing for Fed-Std-1049, 23316

National Institute for Occupational Safety and Health
See Centers for Disease Control

National Institutes of Health
NOTICES
Meetings:
National Eye Institute, 23301

National Oceanic and Atmospheric Administration
NOTICES
Endangered and threatened species:
Sea turtles; decline; causes and prevention; National Academy of Sciences report availability, 23259
Fishery conservation and management:
Summer flounder, 23265
Meetings:
Pacific Fishery Management Council, 23267 (3 documents)
Permits:
Endangered and threatened species, 23267
Marine mammals, 23268 (3 documents)

National Science Foundation
NOTICES
Meetings:
Advanced Technologies Applications, Science and Engineering Education Panel, 23316
Materials Research Advisory Committee, 23317
Meetings; Sunshine Act, 23344

Navy Department
NOTICES
Meetings:
Chief of Naval Operations Executive Panel Advisory Committee, 23269
Naval Research Advisory Committee, 23269, 23270 (3 documents)

Nuclear Regulatory Commission
PROPOSED RULES
Rulemaking petitions:
Sierra Club North Carolina Chapter, 23206
NOTICES
Memorandums of understanding:
Illinois Department of Nuclear Safety; American Society of Mechanical Engineers (ASME) Code activities, 23317
Visiting fellows program; nominations, 23321
Applications, hearings, determinations, etc.:
Florida Power & Light Co.; correction, 23345

Occupational Safety and Health Administration
NOTICES
National recognized testing laboratories, etc.:
American Gas Association Laboratories, 23312
MET Electrical Testing Co., Inc., 23311

Office of United States Trade Representative
See Trade Representative, Office of United States

Pension and Welfare Benefits Administration
NOTICES
Meetings:
Employee Welfare and Pension Benefit Plans Advisory Council, 23316

Presidential Documents
ADMINISTRATIVE ORDERS
China; trade waiver authority continuation (Presidential Determination No. 90–21 of May 24, 1990), 23183

Public Health Service
See Centers for Disease Control; Food and Drug Administration; Health Resources and Services Administration; National Institutes of Health

Railroad Retirement Board
NOTICES
Agency information collection activities under OMB review, 23322

Saint Lawrence Seaway Development Corporation
NOTICES
Meetings:
Advisory Board, 23339

Securities and Exchange Commission
NOTICES
Meetings:
Emerging Markets Advisory Committee, 23323
Self-regulatory organizations; proposed rule changes:
American Stock Exchange, Inc., 23323, 23324 (2 documents)
Chicago Board Options Exchange, Inc., 23326
MBS Clearing Corp., 23327
Municipal Securities Rulemaking Board, 23333
National Association of Securities Dealers, Inc., 23330
National Securities Clearing Corp., 23328, 23329 (2 documents)
New York Stock Exchange, Inc., 23331

Surface Mining Reclamation and Enforcement Office
RULES
Permanent program and abandoned mine land reclamation plan submissions:
Tennessee; correction, 23345

Tennessee Valley Authority
NOTICES
Environmental statements; availability, etc.:
Tennessee Federal Program; coal leasing decisions, 23338

Trade Representative, Office of United States
NOTICES
Unfair trade practices, petitions, etc.:
Canada; Pacific roe herring and salmon exports, 23322

Transportation Department
See Coast Guard; Federal Aviation Administration; Saint Lawrence Seaway Development Corporation

Treasury Department
See also Internal Revenue Service
NOTICES
Agency information collection activities under OMB review, 23340, 23341 (2 documents)
Notes, Treasury:
L-1995 series, 23342
Z-1992 series, 23342

Veterans Affairs Department
NOTICES
Meetings:
Rehabilitation Research and Development Scientific Review and Evaluation Board, 23342
Wage Committee, 23342

Separate Parts In This Issue

Part II
Environmental Protection Agency, 23348

Part III
Department of Health and Human Services, Centers for Disease Control, 23414

Reader Aids
Additional information, including a list of public laws, telephone numbers, and finding aids, appears in the Reader Aids section at the end of this issue.

CFR PARTS AFFECTED IN THIS ISSUE

A cumulative list of the parts affected this month can be found in the Reader Aids section at the end of this issue.

3 CFR
Administrative Orders:
Presidential Determinations:
No. 90-21 of May 24, 1990 23183

7 CFR
982 23185
Proposed Rules:
982 23205
999 23205

8 CFR
103 23345
210a 23345

10 CFR
Proposed Rules:
61 23206

12 CFR
337 23186
Proposed Rules:
210 23208

14 CFR
39 (4 documents) 23187–23190
71 23191
95 23191
97 23199
Proposed Rules:
39 (7 documents) 23218–23231
71 (3 documents) 23233, 23234
75 23234

21 CFR
Proposed Rules:
333 23235
334 23235
335 23235
341 23235
344 23235
347 23235
348 23235
350 23235
355 23235
356 23235
357 23235
358 23235

26 CFR
Proposed Rules:
1 23235

30 CFR
942 23345
Proposed Rules:
220 23248

33 CFR
100 (2 documents) 23200, 23201
117 23202
162 23202
165 23202
Proposed Rules:
165 23250

40 CFR
Proposed Rules:
228 23251

47 CFR
Proposed Rules:
21 23254
43 23254
74 23254
78 23254
94 23254

Federal Register
Vol. 55, No. 110
Thursday, June 7, 1990

Presidential Documents

Title 3—

The President

Presidential Determination No. 90–21 of May 24, 1990

Determination Under Subsection 402(d)(5) of the Trade Act of 1974—Continuation of Waiver Authority

Memorandum for the Secretary of State

Pursuant to the authority vested in me under the Trade Act of 1974 (Public Law 93–618), January 3, 1975 (88 Stat. 1978) (hereinafter "the Act"), I determine, pursuant to subsection 402(d)(5) of the Act, 19 U.S.C. 2432(d)(5), that the further extension of the waiver authority granted by subsection 402(c) of the Act will substantially promote the objectives of section 402 of the Act. I further determine that the continuation of the waiver applicable to the People's Republic of China will substantially promote the objectives of section 402 of the Act.

You are authorized and directed to publish this determination in the **Federal Register.**

George Bush

THE WHITE HOUSE,
Washington, May 24, 1990.

Editorial note: For the President's message to the Congress and the statement by Press Secretary Fitzwater on the renewal of the most-favored-nation trade status for China, see the *Weekly Compilation of Presidential Documents* (vol. 26, p. 827).

[FR Doc. 90–13359
Filed 6–5–90; 3:16 pm]
Billing code 3195–01–M

Rules and Regulations

Federal Register
Vol. 55, No. 110
Thursday, June 7, 1990

This section of the FEDERAL REGISTER contains regulatory documents having general applicability and legal effect, most of which are keyed to and codified in the Code of Federal Regulations, which is published under 50 titles pursuant to 44 U.S.C. 1510.
The Code of Federal Regulations is sold by the Superintendent of Documents. Prices of new books are listed in the first FEDERAL REGISTER issue of each week.

DEPARTMENT OF AGRICULTURE

Agricultural Marketing Service

7 CFR Part 982

[FV-90-158]

Filberts/Hazelnuts Grown in Oregon and Washington

AGENCY: Agricultural Marketing Service, USDA.
ACTION: Final rule.

SUMMARY: This final rule authorizes expenditures and establishes an assessment rate under Marketing Order No. 982 for the 1990–91 marketing year established under the filbert/hazelnut marketing order. Funds to administer this program are derived from assessments on handlers.

EFFECTIVE DATE: July 1, 1990, through June 30, 1991.

FOR FURTHER INFORMATION CONTACT: Beatriz Rodriguez, Marketing Specialist, Marketing Order Administration Branch, F&V, AMS, USDA, P.O. Box 96456, room 2524–S, Washington, DC 20090–6456; telephone (202) 475–3861.

SUPPLEMENTARY INFORMATION: This rule is issued under Marketing Agreement and Order No. 982 (7 CFR part 982), both as amended, regulating the handling of filberts/hazelnuts grown in Oregon and Washington. This order is effective under the Agricultural Marketing Agreement Act of 1937, as amended (7 U.S.C. 601–674), hereinafter referred to as the Act.

This final rule has been reviewed by the U.S. Department of Agriculture (Department) in accordance with Departmental Regulation 1512–1 and the criteria contained in the Executive Order 12291 and has been determined to be a "non-major" rule.

Pursuant to requirements set forth in the Regulatory Flexibility Act (RFA), the Administrator of the Agricultural Marketing Service (AMS) has considered the economic impact of this action on small entities.

The purpose of the RFA is to fit regulatory actions to the scale of business subject to such actions in order that small businesses will not be unduly or disproportionately burdened. Marketing orders issued pursuant to the Act, and rules issued thereunder, are unique in that they are brought about through group action of essentially small entities acting on their own behalf. Thus, both statutes have small entity orientation and compatibility.

There are 27 handlers of filberts/hazelnuts grown in Oregon and Washington subject to regulation under the filbert/hazelnut marketing order, and 1,063 producers of filberts/hazelnuts in the production area. Small agricultural producers have been defined by the Small Business Administration (13 CFR 121.2) as those having annual receipts for the last three years of less than $500,000, and small agricultural service firms are defined as those whose annual receipts are less than $3,500,000. The majority of filbert/hazelnut producers and handlers may be classified as small entities.

The filbert/hazelnut marketing order requires that the assessment rate for a particular fiscal year shall apply to all assessable filberts/hazelnuts handled from the beginning of such year. An annual budget of expenses is prepared by the Filbert/Hazelnut Marketing Board (Board) and submitted to the Department for approval. The members of the Board are handlers and producers of filberts/hazelnuts. They are familiar with the Board's needs and with the costs for goods, services, and personnel in their local areas and are thus in a position to formulate an appropriate budget.

The assessment rate recommended by the Board is derived by dividing anticipated expenses by expected shipments of the commodity. Because that rate is applied to actual shipments, it must be established at a rate which will produce sufficient income to pay the Board's expected expenses. The recommended budget and assessment rate are usually acted upon by the Board shortly before a season starts, and expenses are incurred on a continuous basis. Therefore, the budget and assessment rate approvals must be expedited so that the Board will have funds to pay its expenses.

The Board conducted a telephone vote on April 6, 1990, and unanimously recommended 1990–91 marketing order expenditures of $380,791 and an assessment rate of $14.00 per ton of filberts/hazelnuts. In comparison, 1989–90 marketing year budgeted expenditures were $426,060 and the assessment rate was $14.00 per ton. Major expenditure categories in the 1990–91 budget are $70,791 for administration, $200,000 for promotion, and $100,000 for the emergency reserve fund. Assessment income for 1990–91 is expected to total $280,000 based on a crop estimate of 20,000 tons of filberts/hazelnuts. Interest and incidental income is estimated at $15,000. Reserve funds are adequate to meet the anticipated $85,791 deficit in assessment and other income.

While this final action will impose some additional costs on handlers, the costs are in the form of uniform assessments on all handlers. Some of the additional costs may be passed on to producers. However, these costs would be significantly offset by the benefits derived from the operation of the marketing order. Therefore, the Administrator of the AMS has determined that this action will not have a significant economic impact on a substantial number of small entities.

This action adds a new § 982.335 and is based on Board recommendations and other available information. A proposed rule was published in the **Federal Register** on May 10, 1990 (55 FR 19632). Comments on the proposed rule were invited from interested persons until May 21, 1990. No comments were received.

After consideration of the information and recommendations submitted by the Board and other available information, it is found that this final rule will tend to effectuate the declared policy of the Act.

This action should be expedited because the Board needs to have sufficient funds to pay its expenses, which are incurred on a continuous basis. Therefore, it is also found that good cause exists for not postponing the effective date of this action until 30 days after publication in the **Federal Register** (5 U.S.C. 553).

List of Subjects in 7 CFR Part 982

Filberts, Hazelnuts, Marketing agreements, Nuts, Reporting and Recordkeeping requirements.

For the reasons set forth in the preamble 7 CFR part 982 is amended by adding, a new § 982.335 as follows:

PART 982—FILBERTS/HAZELNUTS GROWN IN OREGON AND WASHINGTON

1. The authority citation for 7 CFR part 982 continues to read as follows:

Authority: Secs. 1–19, 48 Stat. 31, as amended; 7 U.S.C. 601–674.

2. New § 982.335 is added to read as follows:

Note: This section will not appear in the annual Code of Federal Regulations.

§ 982.335 Expenses and assessment rate.

Expenses of $380.791 by the Filbert/Hazelnut Marketing Board are authorized and an assessment rate payable by each handler in accordance with § 982.61 is fixed at $14.00 per ton of assessable filberts/hazelnuts for the 1990–91 marketing year ending June 30, 1991. Unexpended funds may be carried over as a reserve.

Dated: June 4, 1990.

William J. Doyle,

Associate Deputy Director, Fruit and Vegetable Division.

[FR Doc. 90–13253 Filed 6–6–90 8:45 am]

BILLING CODE 3410-02-M

FEDERAL DEPOSIT INSURANCE CORPORATION

12 CFR Part 337

Unsafe and Unsound Banking Practices

AGENCY: Federal Deposit Insurance Corporation ("FDIC").

ACTION: Extension of effectiveness of interim rule.

SUMMARY: The financial Institutions Reform, Recovery, and Enforcement Act of 1989 prohibits an insured depository institution which does not meet applicable minimum capital requirements from accepting funds obtained through any deposit broker. The FDIC may waive the prohibition upon a finding that the acceptance of funds from a deposit broker does not constitute an unsafe or unsound practice with respect to the applicant. The FDIC adopted an interim rule on December 5, 1989, which set forth waiver-application procedures and outlined the circumstances under which a waiver may be granted, implemented a transition period, and clarified terms. The interim rule also requested the comments of interested parties. The interim rule was to remain in effect until June 12, 1990, unless rescinded, amended, modified, or replaced by the FDIC. However, the FDIC believes that it requires more time to consider the issues raised by the comment letters before adopting a final rule. For this reason, this amendment extends the period during which the interim rule remains in effect to August 11, 1990, unless rescinded, amended, modified, or replaced by the FDIC prior to that time.

DATES: This amendment is effective on June 7, 1990. The interim rule published at 54 FR 51012 (Dec. 12, 1989) will remain in effect until August 11, 1990, unless sooner rescinded, amended, modified, or replaced by the FDIC.

FOR FURTHER INFORMATION CONTACT: William G. Hrindac, Examination Specialist, Division of Supervision, (202) 898–6892, or Adrienne George, Attorney, Legal Division, (202) 898–3859, Federal Deposit Insurance Corporation, 550 17th Street NW., Washington, DC 20429.

SUPPLEMENTARY INFORMATION:

Paperwork Reduction Act

The collection of information contained in § 337.6(d) of the interim rule has been reviewed and approved by the Office of Management and Budget in accordance with the requirements of the Paperwork Reduction Act (44 U.S.C. 3504(h)) under control number 3064–0099. The information will be collected from undercapitalized insured depository institutions applying for a waiver from the prohibition on the acceptance or renewal of brokered deposits contained in section 29 of the Federal Deposit Insurance Act (12 U.S.C. 1831f).

The estimated annual reporting burden for the collection of information in this interim rule is summarized as follows:

Number of Respondents: 370
Number of Responses Per Respondent: 1.
Total Annual Responses: 370
Hours Per Response: 6.
Total Annual Burden Hours: 2220.

Comments concerning the accuracy of this burden estimate and suggestions for reducing this burden should be directed to the Assistant Executive Secretary (Administration), room F–400, Federal Deposit Insurance Corporation, Washington, DC 20429, and to the Office of Management and Budget, Paperwork Reduction Project (3064–0099), Washington, DC 20503.

Regulatory Flexibility Act

The FDIC's Board of Directors hereby certifies that the interim rule will not have a significant economic impact on a substantial number of small entities because it largely tracks and clarifies strictures previously established by statute and affords a means by which undercapitalized insured depository institutions may avoid the application of those strictures by applying to the FDIC for a waiver. Moreover, it is anticipated that relatively few small entities will be impacted by the regulation since most insured depository institutions are adequately capitalized or, if undercapitalized, do not utilize brokered deposits. Finally, an entire grouping of undercapitalized institutions, namely, those in FDIC or Resolution Trust Corporation ("RTC") receivership or conservatorship, have effectively been excluded from the application of the regulation. Consequently, the provisions of the Regulatory Flexibility Act relating to an initial and final regulatory flexibility analysis (5 U.S.C. 603 and 604) are not applicable.

Reason for Adoption Without Prior Notice and Comment

Full notice and comment were provided for the interim rule. Because the sole substantive amendment being made to the interim rule is to extend the period during which the interim rule remains in effect to August 11, 1990, the FDIC Board of Directors has determined that the notice and public participation that are ordinarily required by the Administrative Procedure Act (5 U.S.C. 553) before a regulation may take effect would, in this case, be superfluous and that good cause exists for waiving the customary 30-day delayed effective date.

Background

Section 224 of the Financial Institutions Reform, Recovery, and Enforcement Act of 1989 ("FIRREA") added a new section 29 to the Federal Deposit Insurance ("FDI") Act. Section 29 of the FDI Act prohibits a "troubled" institution from accepting funds obtained, directly or indirectly, by or through any deposit broker for deposit into one or more deposit accounts. The term "deposit broker" means "(A) any person engaged in the business of placing deposits, or facilitating the placement of deposits, of third parties with insured depository institutions or the business of placing deposits with insured depository institutions for the purpose of selling interests in those deposits to third parties; and (B) an agent or trustee who establishes a deposit account to facilitate a business arrangement with an insured depository institution to use the proceeds of the

account to fund a prearranged loan." FDI Act section 29(f)(1). In addition, the term "deposit broker" includes "any insured depository institution, and any employee of any insured depository institution, which engages, directly or indirectly, in the solicitation of deposits by offering rates of interest (with respect to such deposits) which are significantly higher than the prevailing rates of interest on deposits offered by other insured depository institutions having the same type of charter in such depository institution's normal market area." FDI Act section 29(f)(3). A "troubled" institution means any insured depository institution which does not meet applicable minimum capital requirements. FDI Act section 29(g).

On December 5, 1989, the FDIC Board of Directors adopted an interim rule and request for comment. 54 FR 51012 (Dec. 12, 1989). For the most part, the interim rule tracked the statute. It did, however, provide guidance in the following areas. First, it provided that the determination of whether an insured depository institution is "troubled," or undercapitalized, shall be made without regard to whether the institution has been granted any forbearance or other relief from any statutory, regulatory, or other capital requirements by any federal or state regulator. Second, the term "significantly higher" was defined to mean 50 basis points. Thus, the term "deposit broker" includes any insured depository institution, and any employee of any insured depository institution, which solicits deposits by offering rates of interest which are more than 50 basis points higher than the prevailing rate of interest offered by other insured depository institutions having the same type of charter in such depository institution's normal market area. Third, the interim rule set forth waiver-application procedures and outlined the circumstances under which a waiver may be granted. Fourth, the interim rule implemented a 60-day transition period expiring February 5, 1990. Fifth, insured depository institutions for which the FDIC or the RTC was appointed conservator or receiver were excluded from the prohibitions set forth in section 29 of the FDI Act and the interim rule.

The interim rule provided that it would remain in effect until June 12, 1990, unless sooner terminated, amended, modified, or replaced by the FDIC. The FDIC believes, however, that it requires more time to consider the issues raised by the comment letters on the interim rule before adopting a final rule. For this reason, this amendment extends the period during which the interim rule remains in effect to August 11, 1990, unless rescinded, amended, modified, or replaced by the FDIC prior to that time.

List of Subjects in 12 CFR Part 337

Banks, banking, Savings and loan associations, Savings associations.

For the reasons set forth in the preamble, the FDIC hereby amends part 337 of title 12 Code of Federal Regulations as follows:

PART 337—UNSAFE AND UNSOUND BANKING PRACTICES

1. The authority citation for part 337 is revised to read as follows:

Authority: 12 U.S.C. 1816, 1818(a), 1818(b), 1819, 1828(j)(2), 1821(f), 1831f.

2. Section 337.6(g) is revised to read as follows:

§ 337.6 Brokered deposits in undercapitalized depository institutions.

* * * * *

(g) *Sunset.* This § 337.6 shall remain in effect until August 11, 1990, unless sooner terminated, amended, modified, or replaced by the FDIC.

* * * * *

By order of the Board of Directors.

Dated at Washington, DC, this 22nd day of May 1990.

Federal Deposit Insurance Corporation.

Hoyle L. Robinson,

Executive Secretary.

[FR Doc. 90-13118 Filed 6-6-90; 8:45 am]

BILLING CODE 6714-01-M

DEPARTMENT OF TRANSPORTATION

Federal Aviation Administration

14 CFR Part 39

[Docket No. 90-NM-100-AD; Amdt. 39-6624]

Airworthiness Directives; Airbus Industrie Model A320 Series Airplanes

AGENCY: Federal Aviation Administration (FAA), DOT.

ACTION: Final rule.

SUMMARY: This amendment adopts a new airworthiness directive (AD), applicable to certain Airbus Industrie Model A320 series airplanes, which requires an inspection to determine if there is sufficient clearance between the fuel probes and the adjacent structures, installation of an insulating sleeve on a bonding lead, and an adjustment of fuel probe clearance, if necessary. This amendment is prompted by reports of inconsistent and inaccurate fuel quantity readings. This condition, if not corrected, could result in a spark occurring between the fuel probes and the bonding lead or bracket in the event of a lightning strike to the wing, which presents a fire hazard.

EFFECTIVE DATE: June 20, 1990.

ADDRESSES: The applicable service information may be obtained from Airbus Industrie, Airbus Support Division, Avenue Didier Daurat, 31700 Blagnac, France. This information may be examined at the FAA, Northwest Mountain Region, Transport Airplane Directorate, 17900 Pacific Highway South, Seattle, Washington, or the Standardization Branch, 9010 East Marginal Way South, Seattle, Washington.

FOR FURTHER INFORMATION CONTACT: Mr. Greg Holt, Standardization Branch, ANM-113; telephone (206) 431-1918. Mailing address: FAA, Northwest Mountain Region, 17900 Pacific Highway South, C-68966, Seattle, Washington 98168.

SUPPLEMENTARY INFORMATION: The Direction Generale de l'Aviation Civile (DGAC), which is the airworthiness authority of France, in accordance with existing provisions of a bilateral airworthiness agreement, has notified the FAA of an unsafe condition which may exist on certain Airbus Industrie Model A320 series airplanes. There have been recent reports of inconsistent and inaccurate fuel quantity readings. Further investigation revealed that this was due to insufficient clearance between the fuel probes and the adjacent structures. This condition, if not corrected, could result in a spark occurring between the fuel probes and bonding lead or bracket in the event of a lightning strike to the wing, which presents a fire hazard.

Airbus Industrie has issued Service Bulletin A320-28-1024, Revision 1, dated February 20, 1990, which describes procedures (1) to verify if there is sufficient clearance between the fuel probes and adjacent structures, (2) to install an insulating sleeve on a bonding lead, and (3) to adjust the clearance between the fuel probe and the adjacent structures, if necessary. These same procedures were also addressed in All Operators' (AOT) Telex 28/89/02, dated November 20, 1989. The DGAC has classified the service bulletin and the AOT as mandatory, and has issued Airworthiness Directive 90-017-005(B) addressing this subject.

This airplane model is manufactured in France and type certificated in the United States under the provisions of § 21.29 of the Federal Aviation

Regulations and the applicable bilateral airworthiness agreement.

Since this condition is likely to exist or develop on other airplanes of the same type design registered in the United States, this AD requires an inspection to determine if there is sufficient clearance between the fuel probes and the adjacent structures, installation of an insulating sleeve on a bonding lead, and an adjustment of fuel probe clearance, if necessary, in accordance with the service bulletin or the AOT previously described.

Since the situation exists that requires immediate adoption of this regulation, it is found that notice and public procedure hereon are impracticable, and good cause exists for making this amendment effective in less than 30 days.

The regulations adopted herein will not have substantial direct effects on the States, on the relationship between the national government and the States, or on the distribution of power and responsibilities among the various levels of government. Therefore, in accordance with Executive Order 12612, it is determined that this final rule does not have sufficient federalism implications to warrant the preparation of a Federalism Assessment.

The FAA has determined that this regulation is an emergency regulation and that it is not considered to be major under Executive Order 12291. It is impracticable for the agency to follow the procedures of Executive Order 12291 with respect to this rule since the rule must be issued immediately to correct an unsafe condition in aircraft. It has been determined further that this action involves an emergency regulation under DOT Regulatory Policies and Procedures (44 FR 11034, February 26, 1979). If it is determined that this emergency regulation otherwise would be significant under DOT Regulatory Policies and Procedures, a final regulatory evaluation will be prepared and placed in the regulatory docket (otherwise, an evaluation is not required). A copy of it, if filed, may be obtained from the Rules Docket.

List of Subjects in 14 CFR Part 39

Air transportation, Aircraft, Aviation safety, Safety.

Adoption of the Amendment

Accordingly, pursuant to the authority delegated to me by the Administrator, the Federal Aviation Administration amends 14 CFR part 39 of the Federal Aviation Regulations as follows:

PART 39—[AMENDED]

1. The authority citation for part 39 continues to read as follows:

Authority: 49 U.S.C. 1354(a), 1421 and 1423; 49 U.S.C. 106(g) (Revised Pub. L. 97-449, January 12, 1983); and 14 CFR 11.89.

§ 39.13 [Amended]

2. Section 39.13 is amended by adding the following new airworthiness directive:

Airbus Industrie: Applies to Model A320 series airplanes, as listed in Airbus Industrie Service Bulletin A320-28-1024, Revision 1, dated February 20, 1990, certificated in any category. Compliance is required within 100 landings after the effective date of this AD, unless previously accomplished.

To ensure proper operation of the fuel quantity indicating system and to prevent the possibility of a spark in the fuel system in the event of a lightning strike, accomplish the following:

A. Verify the clearance between fuel probes 23QT1, 23QT2, and 28QT1, and the adjacent structures; install an insulating sleeve on the vent pipe bonding lead; and adjust fuel proble clearance, in accordance with Airbus Industrie Service Bulletin A320-28-1024, Revision 1, dated February 20, 1990, or All Operators' Telex (AOT) 28/89/03, dated November 20, 1989.

B. An alternate means of compliance or adjustment of the compliance time, which provides an acceptable level of safety, may be used when approved by the Manager, Standardization Branch, ANM-113, FAA, Northwest Mountain Region.

Note: The request should be forwarded through an FAA Principal Maintenance Inspector (PMI), who will either concur or comment and then send it to the Manager, Standarization Branch, ANM-113.

C. Special flight permits may be issued in accordance with FAR 21.197 and 21.199 to operate airplanes to a base in order to comply with the requirements of this AD.

All persons affected by this directive who have not already received the appropriate service information from the manufacturer may obtain copies upon request to Airbus Industrie, Airbus Support Division, Avenue Didier Daurat, 31700 Blagnac, France. This information may be examined at the FAA, Northwest Mountain Region, Transport Airplane Directorate, 17900 Pacific Highway South, Seattle, Washington, or the Standardization Branch, 9010 East Marginal Way South, Seattle, Washington.

This amendment becomes effective June 20, 1990.

Issued in Seattle, Washington, on May 25, 1990.

Darrell M. Pederson,

Acting Manager, Transport Airplane Directorate, Aircraft Certification Service.

[FR Doc. 90-13166 Filed 6-6-90; 8:45 am]

BILLING CODE 4910-13-M

---

14 CFR Part 39

[Docket No. 90-NM-86-AD; Amdt. 39-6626]

Airworthiness Directives; Boeing Model 727, 737, and 757 Series Airplanes

AGENCY: Federal Aviation Administration (FAA), DOT.

ACTION: Final rule.

SUMMARY: This amendment adopts a new airworthiness directive (AD), applicable to Boeing Model 727, 737, and 757 series airplanes, which requires repetitive inspections and replacement, if necessary, of frayed and broken escape slide release cables. This amendment is prompted by numerous reports of frayed and broken escape slide release cables. This condition, if not corrected, could result in an escape slide not releasing from the door and blocking that exit during an emergency evacuation.

EFFECTIVE DATE: June 25, 1990.

FOR FURTHER INFORMATION CONTACT: Mr. Jayson B. Claar, Airframe Branch, ANM-120S; telephone (206) 431-1932. Mailing address: FAA, Northwest Mountain Region, Transport Airplane Directorate, 17900 Pacific Highway South, C-68966, Seattle, Washington 98168.

SUPPLEMENTARY INFORMATION: Escape slide release cables on Boeing Model 727, 737, and 757 series airplanes cause the escape slide container to open at the proper time during the door opening sequence and release the escape slide from its container. The escape slide then falls from the door and inflates either manually or automatically. A broken cable will prevent the escape slide from releasing from the door and will not allow the door to be opened completely. The door may not open far enough to be used for evacuation. One operator reported finding nine frayed cables on eight airplanes; another operator reported finding seven frayed and two broken cables on four airplanes.

Since this condition is likely to exist or develop on other airplanes of these same type designs, this AD requires visual inspection of escape slide release cables and replacement of all frayed or broken cables. (A cable is considered to

be frayed if one or more strands are broken.)

Since a situation exists that requires immediate adoption of this regulation, it is found that notice and public procedure hereon are impracticable, and good cause exists for making this amendment effective in less than 30 days.

The regulations adopted herein will not have substantial direct effects on the States, on the relationship between the national government and the States, or on the distribution of power and responsibilities among the various levels of government. Therefore, in accordance with Executive Order 12612, it is determined that this final rule does not have sufficient federalism implications to warrant the preparation of a Federalism Assessment.

The FAA has determined that this regulation is an emergency regulation and that it is not considered to be major under Executive Order 12291. It is impracticable for the agency to follow the procedures of Order 12291 with respect to this rule since the rule must be issued immediately to correct an unsafe condition in aircraft. It has been determined further that this action involves an emergency regulation under DOT Regulatory Policies and Procedures (44 FR 11034, February 26, 1979). If it is determined that this emergency regulation otherwise would be significant under DOT Regulatory Policies and Procedures, a final regulatory evaluation will be prepared and placed in the regulatory docket (otherwise, an evaluation is not required). A copy of it, if filed, may be obtained from the Rules Docket.

List of Subjects in 14 CFR Part 39

Air transportation, Aircraft, Aviation safety, Safety.

Adoption of the Amendment

Accordingly, pursuant to the authority delegated to me by the Administrator, the Federal Aviation Administration amends 14 CFR part 39 of the Federal Aviation Regulations as follows:

PART 39—[AMENDED]

1. The authority citation for part 39 continues to read as follows:

Authority: 49 U.S.C. 1354(a), 1421 and 1423; 49 U.S.C. 106(g) (Revised Pub. L. 97-449, January 12, 1983); and 14 CFR 11.89.

§ 39.13 [Amended]

2. Section 39.13 is amended by adding the following new airworthiness directive:

Boeing: Applies to all Model 727, 737, and 757 series airplanes, certificated in any category. Compliance required as indicated, unless previously accomplished.

To ensure proper escape slide release from the escape slide compartment, accomplish the following:

A. Within 45 days after the effective date of this AD, unless previously inspected within the last three months, perform a visual inspection of each escape slide release cable. Replace frayed (one or more broken strands) or broken cables prior to further flight.

B. Repeat the inspection for frayed or broken release cables required by paragraph A., above, at intervals not to exceed 12 months.

C. An alternate means of compliance or adjustment of the compliance time, which provides an acceptable level of safety, may be used when approved by the Manager, Seattle Aircraft Certification Office, FAA, Northwest Mountain Region.

Note: The request should be forwarded through an FAA Principal Maintenance Inspector (PMI), who will either concur or comment, and then send it to the Manager, Seattle Aircraft Certification Office.

D. Special flight permits may be issued in accordance with FAR 21.197 and 21.199 to operate airplanes to a base in order to comply with the requirements of this AD.

This amendment becomes effective June 25, 1990.

Issued in Seattle, Washington, on May 29, 1990.

Darrell M. Pederson,

Acting Manager, Transport Airplane Directorate, Aircraft Certification Service.

[FR Doc. 90-13167 Filed 6-6-90; 8:45 am]

BILLING CODE 4910-13-M

---

14 CFR Part 39

[Docket No. 90-NM-15-AD; Amdt. 39-6628]

Airworthiness Directives; SAAB-Scania Model SF-340A Series Airplanes

AGENCY: Federal Aviation Administration (FAA), DOT.

ACTION: Final rule.

SUMMARY: This amendment adopts a new airworthiness directive (AD), applicable to certain SAAB-Scania Model SF-340A series airplanes, which requires an eddy current inspection to detect cracks in the horizontal stabilizer, and repair, if necessary; and reinforcement of the horizontal stabilizer. This amendment is prompted by a report of damage to the front and rear spar of the horizontal stabilizer that occurred during airframe fatigue tests. This condition, if not corrected, could result in reduced structural integrity of the horizontal stabilizer.

EFFECTIVE DATE: July 13, 1990.

ADDRESSES: The applicable service information may be obtained from SAAB-Scania AB, Product Support, S-581.88, Linkoping, Sweden. This information may be examined at the FAA, Northwest Mountain Region, Transport Airplane Directorate, 17900 Pacific Highway South, Seattle, Washington, or the Standardization Branch, 9010 East Marginal Way South, Seattle, Washington.

FOR FURTHER INFORMATION CONTACT: Mr. Mark Quam, Standardization Branch, ANM-113; telephone 431-1978. Mailing address: FAA, Northwest Mountain Region, 17900 Pacific Highway South, C-68966, Seattle, Washington 98168.

SUPPLEMENTARY INFORMATION: A proposal to amend part 39 of the Federal Aviation Regulations to include a new airworthiness directive, applicable to certain SAAB-Scania Model SF-340A series airplanes, which requires an eddy current inspection to detect cracks in the horizontal stabilizer, and repair, if necessary; and reinforcement of the horizontal stabilizer; was published in the **Federal Register** on March 22, 1990 (55 FR 10622).

Interested persons have been afforded an opportunity to participate in the making of this amendment. No comments were received in response to the proposal.

After careful review of the available data, the FAA has determined that air safety and the public interest require the adoption of the rule as proposed.

It is estimated that 79 airplanes of U.S. registry will be affected by this AD, that it will take approximately 250 manhours per airplane to accomplish the required actions, and that the average labor cost will be $40 per manhour. This estimated cost for the required modification kit is $5,000. Based on these figures, the total cost impact of the AD on U.S. operators is estimated to be $1,185,000.

The regulations adopted herein will not have substantial direct effects on the states, on the relationship between the national government and the states, or on the distribution of power and responsibilities among the various levels of government. Therefore, in accordance with Executive Order 12612, it is determined that this final rule does not have sufficient federalism implications to warrant the preparation of a Federalism Assessment.

For the reasons discussed above, I certify that this action (1) is not a "major rule" under Executive Order 12291; (2) is not a "significant rule" under DOT Regulatory Policies and Procedures (44 FR 11034, February 26, 1979); and (3) will

not have a significant economic impact, positive or negative, on a substantial number of small entities under the criteria of the Regulatory Flexibility Act. A final evaluation has been prepared for this action and is contained in the regulatory docket. A copy of it may be obtained from the Rules Docket.

List of Subjects in 14 CFR Part 39

Air transportation, Aircraft, Aviation safety, Safety.

Adoption of the Amendment

Accordingly, pursuant to the authority delegated to me by the Administrator, the Federal Aviation Administration amends 14 CFR part 39 of the Federal Aviation Regulations as follows:

PART 39—[AMENDED]

1. The authority citation for part 39 continues to read as follows:

Authority: 49 U.S.C. 1354(a), 1421 and 1423; 49 U.S.C. 106(g) (Revised Pub. L. 97–449, January 12, 1983); and 14 CFR 11.89.

§ 39.13 [Amended]

2. Section 39.13 is amended by adding the following new airworthiness directive:

SAAB-Scania: Applies to Model SF–340A series airplanes, Serial Numbers 004 through 138, inclusive, certificated in any category. Compliance is required prior to the accumulation of 16,000 landings or within 90 days after the effective date of this AD, whichever occurs later, unless previously accomplished.

To prevent reduced structural integrity of the horizontal stabilizer, accomplish the following:

A. Perform an eddy current inspection to detect cracks in the horizontal stabilizer, in accordance with SAAB-Scania Service Bulletin 340–55–013, dated December 1, 1989. If cracks are detected, repair prior to further flight, in accordance with the service bulletin.

B. Reinforce the horizontal stabilizer, in accordance with SAAB-Scania Service Bulletin 340–55–013, dated December 1, 1989.

C. An alternate means of compliance or adjustment of the compliance time, which provides an acceptable level of safety, may be used when approved by the Manager, Standardization Branch, ANM–113, FAA, Northwest Mountain Region.

Note: The request should be forwarded through an FAA Principal Maintenance Inspector (PMI), who will either concur or comment and then send it to the Manager, Standardization Branch, ANM–113.

D. Special flight permits may be issued in accordance with FAR 21.197 and 21.199 to operate airplanes to a base in order to comply with the requirements of this AD.

All persons affected by this directive who have not already received the appropriate service documents from the manufacturer may obtain copies upon request to SAAB-Scania, Product Support, S581.88, Linkoping, Sweden. These documents may be examined at the FAA, Northwest Mountain Region, Transport Airplane Directorate, 17900 Pacific Highway South, Seattle, Washington, or the Standardization Branch, 9010 East Marginal Way South, Seattle, Washington.

This amendment becomes effective July 13, 1990.

Issued in Seattle, Washington, on May 30, 1990.

Darrell M. Pederson,

Acting Manager, Transport Airplane Directorate, Aircraft Certification Service.

[FR Doc. 90–13168 Filed 6–6–90; 8:45 am]

BILLING CODE 4910–13–M

---

14 CFR Part 39

[Docket No. 90–NM–98–AD; Amdt. 39–6625]

Airworthiness Directives; Airbus Industrie Model A310 and A300–600 Series Airplanes, Equipped With Rudders Pre-Modification 5844

AGENCY: Federal Aviation Administration (FAA), DOT.

ACTION: Final rule.

SUMMARY: This amendment adopts a new airworthiness directive (AD), applicable to certain Airbus Industrie Model A310 and A300–600 series airplanes, which requires repetitive visual inspections and tap tests of the rudder skin panels to detect disbonding, and repair, if necessary. This amendment is prompted by a recent report of extensive disbonding, core rupture, and layer cracking in the rudder skin panels found during a walk-around inspection. This condition, if not corrected, could result in reduced structural integrity of the rudder skin panels.

EFFECTIVE DATE: June 20, 1990.

ADDRESSES: The applicable service information may be obtained from Airbus Industrie, Airbus Support Division, Avenue Didier Daurat, 31700 Blagnac, France. This information may be examined at the FAA, Northwest Mountain Region, Transport Airplane Directorate, 17900 Pacific Highway South, Seattle, Washington, or the Standardization Branch, 9010 East Marginal Way South, Seattle, Washington.

FOR FURTHER INFORMATION CONTACT: Mr. Greg Holt, Standardization Branch, ANM–113; telephone (206) 431–1918. Mailing address: FAA, Northwest Mountain Region, 17900 Pacific Highway South, C–68966, Seattle, Washington 98168.

SUPPLEMENTARY INFORMATION: The Direction Generale de l'Aviation Civile (DGAC), which is the airworthiness authority of France, in accordance with existing provisions of a bilateral airworthiness agreement, has notified the FAA of an unsafe condition which may exist on certain Airbus Industrie Model A310 and A300–600 series airplanes equipped with rudders pre-modification 5844. There have been two cases of disbonding on the rudder skin panels reported by one operator, and another operator has also found extensive disbonding, core rupture, and layer cracking of the rudder skin panels. This condition, if not corrected, could result in reduced structural integrity of the rudder skin panels.

Airbus Industrie has issued an All Operators' Telex (AOT) 55/90/01, Revision 1, dated April 27, 1990, which describes procedures for repetitive visual inspections and tap tests to detect rudder disbonding, and repair, if necessary. The DGAC has classified this AOT as mandatory, and has issued telegraphic airworthiness directive 90–098–112B, addressing this subject.

This airplane model is manufactured in France and type certificated in the United States under the provisions of § 21.29 of the Federal Aviation Regulations and the applicable bilateral airworthiness agreement.

Since this condition is likely to exist or develop on other airplanes of the same type design registered in the United States, this AD requires repetitive visual inspections and tap tests to detect rudder disbonding, and repair, if necessary, in accordance with the AOT previously described.

This is considered to be interim action. The manufacturer is currently attempting to determine the extent and nature of the damage, and is developing an appropriate repetitive inspection schedule and/or a modification that will preclude the need for repetitive inspections. Once these are developed, the FAA may consider further rulemaking to revise this AD to require additional necessary action.

Since a situation exists that requires immediate adoption of this regulation, it is found that notice and public procedure hereon are impracticable, and good cause exists for making this amendment effective in less than 30 days.

The regulations adopted herein will not have substantial direct effects on the states, on the relationship between the national govenment and the states, or on

the distribution of power and responsibilities among the various levels of government. Therefore, in accordance with Executive Order 12612, it is determined that this final rule does not have sufficient federalism implications to warrant the preparation of a Federalism Assessment.

The FAA has determined that this regulation is an emergency regulation and that it is not considered to be major under Executive Order 12291. It is impracticable for the agency to follow the procedures of Executive Order 12291 with respect to this rule since the rule must be issued immediately to correct an unsafe condition in aircraft. It has been determined further that this action involves an emergency regulation under DOT Regulatory Policies and Procedures (44 FR 11034, February 26, 1979). If it is determined that this emergency regulation otherwise would be significant under DOT Regulatory Policies and Procedures, a final regulatory evaluation will be prepared and placed in the regulatory docket (otherwise, an evaluation is not required). A copy of it, if filed, may be obtained from the Rules Docket.

List of Subjects in 14 CFR Part 39

Air transportation, Aircraft, Aviation safety, Safety.

Adoption of the Amendment

Accordingly, pursuant to the authority delegated to me by the Administrator, the Federal Aviation Administration amends 14 CFR part 39 of the Federal Aviation Regulations as follows:

PART 39—[AMENDED]

1. The authority citation for part 39 continues to read as follows:

Authority: 49 U.S.C. 1354(a), 1421 and 1423; 49 U.S.C. 106(g) (Revised Pub. L. 97-449, January 12, 1983); and 14 CFR 11.89.

§ 39.13 [Amended]

2. Section 39.13 is amended by adding the following new airworthiness directive:

Airbus Industrie: Applies to Model A310 and A300-600 Series Airplanes which currently have pre-modification 5844 rudders installed, certificated in any category. Compliance is required as indicated, unless previously accomplished.

To detect rudder skin panel disbonding, accomplish the following:

A. Within 10 landings after the effective date of this AD, and thereafter at intervals not to exceed 7 days or 50 landings, whichever occurs first, perform a visual inspection of the rudder skin panels, left and right, in accordance with All Operators' Telex (AOT) 55/90/01, Revision 1, dated April 27, 1990. If defects are found, prior to further flight, perform tap test in accordance with paragraph B., below.

B. Within 300 landings after the effective date of this AD, perform a tap test to determine extent of the damage in accordance with AOT 55/90/01 Revision 1, dated April 27, 1990.

1. If disbonding is less than 100 square cm, repeat the tap test of the affected area every 28 days or 200 landings, whichever occurs first. For any signs of additional rudder skin panel disbonding, perform drilling procedure in accordance with paragraph 4.2.2.3. of the AOT, and repeat the visual inspection of the rudder skin panels in accordance with paragraph A., above.

2. If disbonding is more than 100 square cm, but less than 5,000 square cm, repair in accordance with paragraph 4.2.2.3. of the AOT. Repeat the visual inspection of the rudder skin panels in accordance with paragraph A.1., above; and perform repetitive tap tests of the repaired areas at the following intervals:

a. Every 500 landings for disbonding more than 100 square cm but less than 300 square cm;

b. Every 250 landings for disbonding more than 300 square cm but less than 1,000 square cm;

c. Every 75 landings for disbonding more than 1,000 square cm, but less than 5,000 square cm.

3. If disbonding is more than 5,000 square cm or if a crack is found, prior to further flight, repair in a manner approved by the Manger, Standardization Branch, ANM-113, FAA, Northwest Mountain Region.

C. An alternate means of compliance or adjustment of the compliance time, which provides an acceptable level of safety, may be used when approved by the Manager, Standardization Branch, ANM-113, FAA, Northwest Mountain Region.

Note: The request should be forwarded through an FAA Principal Maintenance Inspector (PMI), who will either concur or comment and then send it to the Manager, Standardization Branch, ANM-113.

D. Special flight permits may be issued in accordance with FAR 21.197 and 21.199 to operate airplanes to a base in order to comply with the requirements to this AD.

All persons affected by this directive who have not already received the appropriate service information from the manufacturer may obtain copies upon request to Airbus Industrie, Airbus Support Division, Avenue Didier Daurat, 31700 Blagnac, France. This information may be examined at the FAA, Northwest Mountain Region, Transport Airplane Directorate, 17900 Pacific Highway South, Seattle, Washington, or the Standardization Branch, 9010 East Marginal Way South, Seattle, Washington.

This amendment becomes effective June 20, 1990.

Issued in Seattle, Washington, on May 25, 1990.

Darrell M. Pederson,

Acting Manager, Transport Airplane Directorate, Aircraft Certification Service.

[FR Doc. 90-13164 Filed 6-6-90; 8:45 am]

BILLING CODE 4910-13-M

---

14 CFR Part 71

[Airspace Docket No. 89-AWA-12]

RIN 2120-AD07

Establishment of the Tampa Terminal Control Area and Revocation of the Tampa International Airport; Airport Radar Service Area, Florida

AGENCY: Federal Aviation Administration (FAA), DOT.

ACTION: Final rule; correction.

SUMMARY: This action corrects two typographical errors in the final rule published in **Federal Register** Document 90-10677 on May 8, 1990 (55 FR 19226). On page 19230, in Area B, second column, first line, the coordinates were incorrectly listed as "lat. 27°44'25" N."; they should read "lat. 27°42'25" N." Further, on page 19230, in Area B, second column, eighth line, the word "clockwise" should read "counterclockwise."

FOR FURTHER INFORMATION CONTACT: Lewis W. Still, Airspace and Obstruction Evaluation Branch (ATP-240), Airspace-Rules and Aeronautical Information Division, Air Traffic Rules and Procedures Service, Federal Aviation Administration, 800 Independence Avenue, SW., Washington, DC 20591; telephone: (202) 267-9250.

Issued in Washington, DC, on May 30, 1990.

Harold W Becker,

Manager, Airspace-Rules and Aeronautical Information Division.

[FR Doc. 90-13169 Filed 6-6-90; 8:45 am]

BILLING CODE 4910-13-M

---

14 CFR Part 95

[Docket No. 25246; Amdt. No. 357]

IFR Altitudes; Miscellaneous Amendments

AGENCY: Federal Aviation Administration (FAA), DOT.

ACTION: Final rule.

SUMMARY: This action adopts miscellaneous amendments to the required IFR (instrument flight rules) altitudes and changeover points for

certain Federal airways, jet routes, or direct routes for which a minimum or maximum en route authorized IFR altitude is prescribed. These regulatory actions are needed because of changes occurring in the National Airspace System. These changes are designed to provide for the safe and efficient use of the navigable airspace under instrument conditions in the affected areas.

EFFECTIVE DATE: June 28, 1990.

FOR FURTHER INFORMATION CONTACT: Paul J. Best, Flight Procedures Standards Branch (AFS-420), Technical Programs Division, Flight Standards Service, Federal Aviation Administration, 800 Independence Avenue, SW., Washington, DC 20591; telephone: (202) 267-8277.

SUPPLEMENTARY INFORMATION: This amendment to part 95 of the Federal Aviation Regulations (14 CFR part 95) amends, suspends, or revokes IFR altitudes governing the operation of all aircraft in flight over a specified route or any portion of that route, as well as the changeover points (COPs) for Federal airways, jet routes, or direct routes as prescribed in part 95. The specified IFR altitudes, when used in conjunction with the prescribed changeover points for those routes, ensure navigation aid coverage that is adequate for safe flight operations and free of frequency interference. The reasons and circumstances which create the need for this amendment involve matters of flight safety, operational efficiency in the National Airspace System, and are related to published aeronautical charts that are essential to the user and provide for the safe and efficient use of the navigable airspace. In addition, those various reasons or circumstances require making this amendment effective before the next scheduled charting and publication date of the flight information to assure its timely availability to the user. The effective date of this amendment reflects those considerations. In view of the close and immediate relationship between these regulatory changes and safety in air commerce, I find that notice and public procedure before adopting this amendment are unnecessary, impracticable, and contrary to the public interest and that good cause exists for making the amendment effective in less than 30 days.

The FAA has determined that this regulation only involves an established body of technical regulations for which frequent and routine amendments are necessary to keep them operationally current. It, therefore—(1) is not a "major rule" under Executive Order 12291; (2) is not a "significant rule" under DOT Regulatory Policies and Procedures (44 FR 11034; February 26, 1979); and (3) does not warrant preparation of a regulatory evaluation as the anticipated impact is so minimal. For the same reason, the FAA certifies that this amendment will not have a significant economic impact on a substantial number of small entities under the criteria of the Regulatory Flexibility Act.

List of Subjects in 14 CFR Part 95

Aircraft, Airspace.

Issued in Washington, DC, on May 25, 1990.

Daniel C. Beaudette,

Director, Flight Standards Service.

Adoption of the Amendment

Accordingly, pursuant to the authority delegated to me by the Administrator, part 95 of the Federal Aviation Regulations (14 CFR part 95) is amended as follows effective at 0901 g.m.t.:

PART 95—[AMENDED]

1. The authority citation for part 95 continues to read as follows:

Authority: 49 U.S.C. 1348, 1354, and 1510; 49 U.S.C. 106(g) (Revised Pub. L. 97-449, January 12, 1983); and 14 CFR 11.49(b)(2).

§§ 95.1001, 95.6007 95.6011, 95.6014, 95.6015, 95.6026, 95.6036, 95.6044, 95.6052, 95.6066, 95.6068, 95.6078, 95.6080, 95.6084, 95.6088, 95.6091, 95.6092, 95.6095, 95.6097, 95.6099, 95.6100, 95.6114, 95.6123, 95.6148, 95.6157, 95.6159, 95.6179, 95.6303, 95.6312, 95.6374, 95.6421, 95.6422, 95.6433, 95.6451, 95.6475, 95.6483, 95.6487, 95.6519, 95.6526, 95.6532, 95.7147, 95.7152, 95.8003 [Amended]

2. Part 95 is amended to read as follows:

BILLING CODE 4910-13-M

REVISIONS TO MINIMUM ENROUTE IFR ALTITUDES & CHANGEOVER POINTS

AMENDMENT 357 EFFECTIVE DATE, JUNE 28, 1990

§95.1001 DIRECT ROUTES-U.S.

ATLANTIC ROUTES

AR 9 IS AMENDED TO DELETE

FROM	TO	MEA
NORFOLK, VA VORTAC *3000 - MRA	*ATLIC, VA FIX	3000
*ATLIC, VA FIX *3000 - MRA **7000 - MRA	**OUTES, VA FIX	7000
OUTES, VA FIX *23000 - MRA	*CROAK, VA FIX	23000
CROAK, VA FIX *35000 - MRA	*ZIBUT, VA FIX	35000

A22 IS DELETED

FROM	TO	MEA
NANTUCKET, MA NDB	SLATN, OA FIX	18000 MAA-45000

A23

FROM	TO	MEA
KENNEDY, NY VORTAC	LEOES, OA FIX	15000 MAA-45000
LEOES, OA FIX	LINND, OA FIX	18000 MAA-45000

A523 IS ADDED TO READ

FROM	TO	MEA
KENNEDY, NY VORTAC	LEOES, OA FIX	15000 MAA-45000
LEOES, OA FIX	LINND, OA FIX	18000 MAA-45000

A632

FROM	TO	MEA
NANTUCKET, MA NDB	SLATN, OA FIX	18000 MAA-45000

§95.6007 VOR FEDERAL AIRWAY 7

IS AMENDED TO READ IN PART

FROM	TO	MEA
CHICAGO HEIGHTS, IL VORTAC *3000 - MCA NILES FIX, N BND	*NILES, IL FIX	2100
NILES, IL FIX	LAIRD, IL FIX	3300
*LAIRD, IL FIX *3000 - MCA LAIRD FIX, S BND	THORR, IL FIX	2500
THORR, IL FIX *1700 - MOCA	PAPPI, IL FIX	*2500
PAPPI, IL FIX *1700 - MOCA	TALOR, WI FIX	*4000
TALOR, WI FIX *1800 - MOCA	PETTY, WI FIX	*6000
PETTY, WI FIX *1700 - MOCA	PROOT, WI FIX	*4500
PROOT, WI FIX *2100 - MOCA	FALLS, WI VOR	*3000

§95.6011 VOR FEDERAL AIRWAY 11

IS AMENDED TO READ IN PART

FROM	TO	MEA
FORT WAYNE, IN VORTAC *4000 - MRA	*GRABI, IN FIX	3000
GRABI, IN FIX	EDGEE, OH FIX	3000

§95.6014 VOR FEDERAL AIRWAY 14

IS AMENDED TO READ IN PART

FROM	TO	MEA
VICHY, MO VORTAC *2400 - MOCA	STEER, MO FIX	*3000
STEER, MO FIX	ST LOUIS, MO VORTAC	2600

§95.6015 VOR FEDERAL AIRWAY 15

IS AMENDED TO DELETE

FROM	TO	MEA
SIOUX FALLS, SD VORTAC VIA W ALTER.	MITCHELL, SD VOR/DME VIA W ALTER.	3400
MITCHELL, SD VOR/DME VIA W ALTER.	HURON, SD VORTAC VIA W ALTER.	3000
HURON, SD VORTAC VIA W ALTER.	ABERDEEN, SD VOR/DME VIA W ALTER.	3000

§95.6026 VOR FEDERAL AIRWAY 26

IS AMENDED TO READ IN PART

FROM	TO	MEA
OBITT, SD FIX *3200 - MOCA	ASTOE, SD FIX	*4600 MAA-12000
ASTOE, SD FIX *3200 - MOCA	REDWOOD FALLS, MN VORTAC	*4600

IS AMENDED TO DELETE

FROM	TO	MEA
HURON, SD VORTAC VIA S ALTER. *3400 - MOCA	REDWOOD FALLS, MN VORTAC VIA S ALTER.	*5000

§95.6036 VOR FEDERAL AIRWAY 36

IS AMENDED TO READ IN PART

FROM	TO	MEA
HAWLY, PA FIX	BETTY, NJ FIX	15000
BETTY, NJ FIX	NEION, NJ FIX	9000

§95.6044 VOR FEDERAL AIRWAY 44

IS AMENDED TO READ IN PART

FROM	TO	MEA
DEER PARK, NY VORTAC *7000 - MRA	*NESSI, CT FIX	2000
NESSI, CT FIX	BRIDGEPORT, CT VOR	2000

FROM	TO	MEA

§95.6052 VOR FEDERAL AIRWAY 52
IS AMENDED TO READ IN PART

QUINCY, IL VORTAC	*ATLIS, IL FIX	2600
*6000 - MRA		
ATLIS, IL FIX	ST LOUIS, MO VORTAC	2600

§95.6066 VOR FEDERAL AIRWAY 66
IS AMENDED TO READ IN PART

HYMAN, TX FIX	TYEES, TX FIX	*7000
*4500 - MOCA		
TYEES, TX FIX	ABILENE, TX VORTAC	*7000
*4300 - MOCA		

§95.6068 VOR FEDERAL AIRWAY 68
IS AMENDED TO READ IN PART

OTINS, NM FIX	PEDRA, NM FIX	*11500
*10000 - MOCA		

§95.6078 VOR FEDERAL AIRWAY 78
IS AMENDED TO DELETE

HURON, SD VORTAC VIA S ALTER.	WATERTOWN, SD VORTAC VIA S ALTER.	3700

§95.6080 VOR FEDERAL AIRWAY 80
IS AMENDED TO READ IN PART

NORTH PLATTE, NE VORTAC	O NEILL, NE VORTAC.	*5400
*4400 - MOCA		
O NEILL, NE VORTAC	TYNDA, SD FIX	*4000
*3500 - MOCA		
TYNDA, SD FIX	DOLTS, SD FIX	*4000
*3200 - MOCA		
DOLTS, SD FIX	SIOUX FALLS, SD VORTAC	3400

§95.6084 VOR FEDERAL AIRWAY 84
IS AMENDED TO READ IN PART

NORTHBROOK, IL VORTAC	*KUBBS, IL FIX	**2500
*4000 - MRA		
**1800 - MOCA		
KUBBS, IL FIX	*STORY, IL FIX	**2500
*3500 - MRA		
**1800 - MOCA		
STORY, IL FIX	*TADDS, MI FIX	**2500
*3500 - MRA		
**1800 - MOCA		

§95.6088 VOR FEDERAL AIRWAY 88
IS AMENDED TO READ IN PART

VICHY, MO VORTAC	STEER, MO FIX	*3000
*2400 - MOCA		
STEER, MO FIX	TROY, IL VORTAC	2700

FROM	TO	MEA

§95.6091 VOR FEDERAL AIRWAY 91
IS AMENDED TO READ IN PART

CALVERTON, NY VORTAC	*NESSI, CT FIX	2000
*7000 - MRA		
NESSI, CT FIX	BRIDGEPORT, CT VOR	2000

§95.6092 VOR FEDERAL AIRWAY 92
IS AMENDED TO READ IN PART

BEBEE, IL FIX	*NILES, IL FIX	3300
*3000 - MCA NILES FIX, N BND		

§95.6095 VOR FEDERAL AIRWAY 95
IS AMENDED TO READ IN PART

LAZON, CO FIX	POWES, CO FIX	
	N BND	15000
	S BND	16100
POWES, CO FIX	*BLUE MESA, CO VORTAC	
	SW BND	16100
	NE BND	12800
*12600 - MCA BLUE MESA VORTAC, S BND		
*12900 - MCA BLUE MESA VORTAC, NE BND		

§95.6097 VOR FEDERAL AIRWAY 97
IS AMENDED TO READ IN PART

CHICAGO HEIGHTS, IL VORTAC	*NILES, IL FIX	2100
*3000 - MCA NILES FIX, N BND		
NILES, IL FIX	BEBEE, IL FIX	3300

§95.6099 VOR FEDERAL AIRWAY 99
IS AMENDED TO READ IN PART

LA GUARDIA, NY VOR/DME	OUTTE, CT FIX	2500
OUTTE, CT FIX	VAGUS, CT FIX	4500
VAGUS, CT FIX	ANNEI, CT FIX	5500
ANNEI, CT FIX	SORRY, CT FIX	7000
SORRY, CT FIX	HARTFORD, CT VORTAC	3000

§95.6100 VOR FEDERAL AIRWAY 100
IS AMENDED TO READ IN PART

NORTHBROOK, IL VORTAC	*MINCE, MI FIX	2500
*3500 - MRA		
MINCE, MI FIX	MUSKY, MI FIX	2500

§95.6114 VOR FEDERAL AIRWAY 114
IS AMENDED TO READ IN PART

CAUDE, TX FIX	*DOGIN, TX FIX	5000
*7500 - MRA		

FROM	TO	MEA

§95.6123 VOR FEDERAL AIRWAY 123

IS AMENDED TO READ IN PART

LA GUARDIA, NY VOR/DME *1500 - MOCA	FAMMA, NY FIX	*2000
FAMMA, NY FIX	HAARP, NY FIX	3000
HAARP, NY FIX *4000 - MRA	*RYMES, NY FIX	4000
RYMES, NY FIX *2000 - MOCA	CARMEL, NY VORTAC	*2500

§95.6148 VOR FEDERAL AIRWAY 148

IS AMENDED TO READ IN PART

NORTH PLATTE, NE VORTAC *4400 - MOCA	O NEILL, NE VORTAC	*5400

IS AMENDED TO DELETE

SIOUX FALLS, SD VORTAC	REDWOOD FALLS, MN VORTAC	
VIA S ALTER.	VIA S ALTER.	3700

§95.6157 VOR FEDERAL AIRWAY 157

IS AMENDED TO READ IN PART

LA GUARDIA, NY VOR/DME *1500 - MOCA	FAMMA, NY FIX	*2000
FAMMA, NY FIX	HAARP, NY FIX	3000

§95.6159 VOR FEDERAL AIRWAY 159

IS AMENDED BY ADDING

MITCHELL, SD VOR/DME	HURON, SD VORTAC	3000

§95.6179 VOR FEDERAL AIRWAY 179

IS AMENDED BY ADDING

BRUNSWICK, GA VORTAC	DUBLIN, GA VORTAC	2000

IS AMENDED TO READ IN PART

DUBLIN, GA VORTAC *2100 - MOCA	HUSKY, GA FIX	*3000

§95.6303 VOR FEDERAL AIRWAY 303

IS AMENDED TO READ IN PART

BLIMP, AR FIX *2200 - MOCA	FORT SMITH, AR VORTAC	*2700

§95.6312 VOR FEDERAL AIRWAY 312

IS AMENDED TO READ IN PART

COYLE, NJ VORTAC	LEGGS, NJ FIX	1900

FROM	TO	MEA

§95.6374 VOR FEDERAL AIRWAY 374

IS AMENDED TO READ IN PART

CARMEL, NY VORTAC *9000 - MRA	*BETHA, CT FIX	2000
BETHA, CT FIX	CREAM, CT FIX	2000

§95.6421 VOR FEDERAL AIRWAY 421

IS AMENDED TO READ IN PART

LAZON, CO FIX	POWES, CO FIX	
	S BND	16100
	N BND	15000
POWES, CO FIX	*BLUE MESA, CO VORTAC	
	SW BND	16100
	NE BND	12800

*12600 - MCA BLUE MESA VORTAC, S BND
*12900 - MCA BLUE MESA VORTAC, N BND

§95.6422 VOR FEDERAL AIRWAY 422

IS AMENDED TO READ IN PART

BEBEE, IL FIX *3000 - MCA NILES FIX, N BND	*NILES, IL FIX	3000

§95.6433 VOR FEDERAL AIRWAY 433

IS AMENDED TO READ IN PART

LA GUARDIA, NY VOR/DME	DUNBO, NY FIX	1500
DUNBO, NY FIX *1500 - MOCA	BRIDGEPORT, CT VOR	*2000

§95.6451 VOR FEDERAL AIRWAY 451

IS AMENDED TO READ IN PART

LA GUARDIA, NY VOR/DME	ODALE, NY FIX	2500
ODALE, NY FIX *3500 - MRA	*JOHNE, NY FIX	3500
JOHNE, NY FIX	WORMY, NY FIX	4500
WORMY, NY FIX *7000 - MRA	*NESSI, CT FIX	7000
NESSI, CT FIX *1600 - MOCA	KEYED, NY FIX	*2500

§95.6475 VOR FEDERAL AIRWAY 475

IS AMENDED TO READ IN PART

LA GUARDIA, NY VOR/DME	DUNBO, NY FIX	1500
DUNBO, NY FIX *1500 - MOCA	BRIDGEPORT, CT VOR	*2000

§95.6483 VOR FEDERAL AIRWAY 483

IS AMENDED TO READ IN PART

DEER PARK, NY VORTAC *3500 - MRA **2000 - MOCA	*JOHNE, NY FIX	**2500

FROM	TO	MEA
§95.6483 VOR FEDERAL AIRWAY 483—Continued		
JOHNE, NY FIX *4000 - MRA **2000 - MOCA	*RYMES, NY FIX	**2500
RYMES, NY FIX *2000 - MOCA	CARMEL, NY VORTAC	*2500
§95.6487 VOR FEDERAL AIRWAY 487 IS AMENDED TO READ IN PART		
LA GUARDIA, NY VOR/DME	DUNBO, NY FIX	1500
DUNBO, NY FIX *1500 - MOCA	BRIDGEPORT, CT VOR	*2000
§95.6519 VOR FEDERAL AIRWAY 519 IS AMENDED BY ADDING		
BLUEFIELD, WV VORTAC *5200 - MOCA	BECKLEY, WV VORTAC	*6000
§95.6526 VOR FEDERAL AIRWAY 526 IS AMENDED TO READ IN PART		
NORTHBROOK, IL VORTAC *3500 - MRA	*MINCE, MI FIX	2500
MINCE, MI FIX	MUSKY, MI FIX	2500
§95.6532 VOR FEDERAL AIRWAY 532 IS AMENDED TO READ IN PART		
PARON, AR FIX *4000 - MCA BLIMP FIX, SE BND **3600 - MOCA	*BLIMP, AR FIX	**4500
BLIMP, AR FIX *2200 - MOCA	FORT SMITH, AR VORTAC	*2700

FROM	TO	MEA	MAA
§95.7147 JET ROUTE NO. 147			
	IS AMENDED TO READ IN PART		
BECKLEY, WV VORTAC	RHODE, VA FIX	22000	45000
RHODE, VA FIX	CASANOVA, VA VORTAC	18000	45000
§95.7152 JET ROUTE NO. 152			
	IS AMENDED TO DELETE		
CAPITAL, IL VORTAC	ROCCK, IL FIX	18000	45000
ROCCK, IL FIX	ROSEWOOD, OH VORTAC	23000	45000

§95.8003 VOR FEDERAL AIRWAYS CHANGEOVER POINTS

AIRWAY SEGMENT		CHANGEOVER POINTS	
FROM	TO	DISTANCE	FROM
V-433			
IS AMENDED BY ADDING			
LA GUARDIA, NY VOR/DME	DUNBO, NY FIX	9	LA GUARDIA
V-475			
IS AMENDED BY ADDING			
LA GUARDIA, NY VOR/DME	DUNBO, NY FIX	9	LA GUARDIA
V-487			
IS AMENDED BY ADDING			
LA GUARDIA, NY VOR/DME	DUNBO, NY FIX	9	LA GUARDIA

[FR Doc. 90-13170 Filed 6-6-90; 8:45 am]
BILLING CODE 4910-13-C

14 CFR Part 97

[Docket No. 26240; Amdt. No. 1427]

Standard Instrument Approach Procedures; Miscellaneous Amendments

AGENCY: Federal Aviation Administration (FAA), DOT.

ACTION: Final rule.

SUMMARY: This amendment establishes, amends, suspends, or revokes Standard Instrument Approach Procedures (SIAPs) for operations at certain airports. These regulatory actions are needed because of the adoption of new or revised criteria, or because of changes occurring in the National Airspace System, such as the commissioning of new navigational facilities, addition of new obstacles, or changes in air traffic requirements. These changes are designed to provide safe and efficient use of the navigable airspace and to promote safe flight operations under instrument flight rules at the affected airports.

DATES: *Effective:* An effective date for each SIAP is specified in the amendatory provisions.

Incorporation by reference—approved by the Director of the Federal Register on December 31, 1980, and reapproved as of January 1, 1982.

ADDRESSES: Availability of matters incorporated by reference in the amendment is as follows:

For Examination—

1. FAA Rules Docket, FAA Headquarters Building, 800 Independence Avenue, SW., Washington, DC 20591;

2. The FAA Regional Office of the region in which the affected airport is located; or

3. The Flight Inspection Field Office which originated the SIAP.

For Purchase—

Individual SIAP copies may be obtained from:

1. FAA Public Inquiry Center (APA-200), FAA Headquarters Building, 800 Independence Avenue, SW., Washington, DC 20591; or

2. The FAA Regional Office of the region in which the affected airport is located.

By Subscription—

Copies of all SIAPs, mailed once every 2 weeks, are for sale by the Superintendent of Documents, U.S. Government Printing Office, Washington, DC 20402.

FOR FURTHER INFORMATION CONTACT:

Paul J. Best, Flight Procedures Standards Branch (AFS-420), Technical Programs Division, Flight Standards Service, Federal Aviation Administration, 800 Independence Avenue, SW., Washington, DC 20591; telephone (202) 267-8277.

SUPPLEMENTARY INFORMATION: This amendment to part 97 of the Federal Aviation Regulations (14 CFR part 97) establishes, amends, suspends, or revokes Standard Instrument Approach Procedures (SIAPs). The complete regulatory description of each SIAP is contained in official FAA form documents which are incorporated by reference in this amendment under 5 U.S.C. 522(a), 1 CFR part 51, and § 97.20 of the Federal Aviation Regulations (FAR). The applicable FAA Forms are identified as FAA Forms 8260-3, 8260-4, and 8260-5. Materials incorporated by reference are available for examination or purchase as stated above.

The large number of SIAPs, their complex nature, and the need for a special format make their verbatim publication in the **Federal Register** expensive and impractical. Further, airmen do not use the regulatory text of the SIAPs, but refer to their graphic depiction on charts printed by publishers of aeronautical materials. Thus, the advantages of incorporation by reference are realized and publication of the complete description of each SIAP contained in FAA form documents is unnecessary. The provisions of this amendment state the affected CFR (and FAR) sections, with the types and effective dates of the SIAPs. This amendment also indentifies the airport, its location, the procedure identification and the amendment number.

This amendment to part 97 is effective on the date of publication and contains separate SIAPs which have compliance dates stated as effective dates based on related changes in the National Airspace System or the application of new or revised criteria. Some SIAP amendments may have been previously issued by the FAA in a National Flight Data Center (FDC) Notice to Airmen (NOTAM) as an emergency action of immediate flight safety relating directly to published aeronautical charts. The circumstances which created the need for some SIAP amendments may require making them effective in less than 30 days. For the remaining SIAPs, an effective date at least 30 days after publication is provided.

Further, the SIAPs contained in this amendment are based on the criteria contained in the U.S. Standard for Terminal Instrument Approach Procedures (TERPs). In developing these SIAPs, The TERPS criteria were applied to the conditions existing or anticipated at the affected airports. Because of the close and immediate relationship between these SIAPs and safety in air commerce, I find that notice and public procedure before adopting these SIAPs are unnecessary, impracticable, and contrary to the public interest and, where applicable, that good cause exists for making some SIAPs effective in less than 30 days.

The FAA has determined that this regulation only involves an established body of technical regulations for which frequent and routine amendments are necessary to keep them operationally current. It, therefore—(1) is not a "major rule under Executive Order 12291; (2) is not a "significant rule" under DOT Regulatory Policies and Procedures (44 FR 11034; February 26, 1979); and (3) does not warrant preparation of a regulatory evaluation as the anticipated impact is so minimal. For the same reason, the FAA certifies that this amendment will not have a significant economic impact on a substantial number of small entities under the criteria of the Regulatory Flexibility Act.

List of Subjects in 14 CFR Part 97

Approaches, Standard instrument, incorporation by reference.

Issued in Washington, DC on May 25, 1990.

Daniel C. Beaudette,

Director, Flight Standards Service.

Adoption of the Amendment

Accordingly, pursuant to the authority delegated to me, part 97 of the Federal Aviation Regulations (14 CFR part 97) is amended by establishing, amending, suspending, or revoking Standard Instrument Approach Procedures, effective at 0901 g.m.t. on the dates specified, as follows:

PART 97—[AMENDED]

1. The authority citation for part 97 continues to read as follows:

Authority: 49 U.S.C. 1348, 1354(a), 1421 and 1510; 49 U.S.C. 106(g) (Revised Pub. L. 97-449, January 12, 1983); and 14 CFR 11.49(b)(2).

2. Part 97 is amended to read as follows:

§§ 97.23, 97.25, 97.27, 97.29, 97.31, 97.33, 97.35 [Amended]

By amending: § 97.23 VOR, VOR/DME, VOR or TACAN, and VOR/DME or TACAN; § 97.25 LOC, LOC/DME, LDA, LDA/DME, SDF, SDF/DME; § 97.27 NDB, NDB/DME; § 97.29 ILS, ILS/DME, ISMLS, MLS, MLS/DME, MLS/RNAV; § 97.31 RADAR SIAPs; § 97.33 RNAV SIAPs; and § 97.35 COPTER SIAPs, idenfified as follows:

* * * *Effective August 23, 1990*

Knoxville, TN—McGhee-Tyson, ILS RWY 23R, Amdt. 9

** * * Effective July 26, 1990*

Centerville, TN—Centerville Muni, VOR/DME RWY 2, Amdt. 2
Rogersville, TN—Hawkins County, NDB RWY 7, Amdt. 2

** * * Effective June 28, 1990*

Chicago/Waukegan, IL—Waukegan Regional, ILS RWY 23, Amdt. 2
Lexington, Ky—Blue Grass, ILS RWY 22, Amdt. 12
Lakeville, MN—Airlake, VOR-A, Amdt. 3
Lakeville, MN—Airlake, ILS RWY 29, Amdt. 2
Clinton, MO—Clinton Memorial, NDB RWY 4, Amdt. 4
Clinton, MO—Clinton Memorial, NDB RWY 22, Amdt. 5
Farmington, NM—Four Corners Regional, VOR RWY 25, Amdt. 6
Farmington, NM—Four Corners Regional, ILS RWY 25, Amdt. 4
Charlotte, NC—Charlotte/Douglas Intl, LOC RWY 18L, Orig.
Charlotte, NC—Charlotte/Douglas Intl, ILS RWY 18R, Amdt. 7
Georgetown, OH—Brown County, NDB RWY 35, Amdt. 3
Newark, OH—Neward-Heath, SDF RWY 9, Amdt. 3
Blacksburg, VA—Virginia Tech, LOC RWY 12, Amdt. 2

** * * Effective May 3, 1990*

Burbank, CA—Burbank-Glendale-Pasadena, VOR RWY 8, Amdt. 7
Burbank, CA—Burbank-Glendale-Pasadena, LOC RWY 8, Amdt. 1
Burbank, CA—Burbank-Glendale-Pasadena, NDB RWY 8, Amdt. 1
Burbank, CA—Burbank-Glendale-Pasadena, ILS RWY 8, Amdt. 33

[FR Doc. 90-13171 Filed 6-6-90; 8:45 am]
BILLING CODE 4910-13-M

Coast Guard

33 CFR Part 100

[CGD 09-90-14]

Special Local Regulations: Sheboygan Independence Day Celebration, Sheboygan Harbor, Lake Michigan, Sheboygan, WI

AGENCY: Coast Guard, DOT.
ACTION: Final rule.

SUMMARY: Special Local Regulations are being adopted for the Sheboygan Independence Day Celebration. This event will be held over Sheboygan Harbor, Lake Michigan, Sheboygan, WI on 4 July 1990. The regulations are needed to provide for the safety of life and property on navigable waters during the event.

EFFECTIVE DATE: These regulations become effective at 3 p.m. (CDST) and terminate at 10 p.m. (CDST), 4 July 1990.

FOR FURTHER INFORMATION CONTACT: Corey A. Bennett, Marine Science Technician First Class, U.S. Coast Guard, Search and Rescue Branch, Ninth Coast Guard District, 1240 East 9th Street, Cleveland, OH 44199, (216) 522-4420.

SUPPLEMENTARY INFORMATION: In accordance with 5 U.S.C. 553, a Notice of Proposed Rule Making has not been published for these regulations and good cause exists for making them effective in less than 30 days from the date of publication. Following normal rulemaking procedures would have been impracticable. The application to hold this event was not received by the Commander, Ninth Coast Guard District until May 3, 1990, and there was not sufficient time remaining to publish proposed rules in advance of the event or to provide for a delayed effective date.

This event was held last year and no negative comments concerning it have been received.

Drafting Information

The drafters of this regulation are Corey A. Bennett, Marine Science Technician First Class, U.S. Coast Guard, project officer, Search and Rescue Branch and M. Eric Reeves, Lieutenant Commander, U.S. Coast Guard, project attorney, Ninth Coast Guard District Legal Office.

Discussion of Regulations

The City of Sheboygan is sponsoring the Sheboygan Independence Day Celebration. This event will include an airshow and a fireworks display immediately following. The airshow will be conducted over the Sheboygan Harbor, Lake Michigan on 4 July 1990. This event will have seven aerobatic airplanes performing low flying aircraft demonstrations, high performance aircraft aerobatics, parachutists, and other events which could pose hazards to navigation in the area. Vessels desiring to transit the regulated area may do so only with prior approval of the Patrol Commander (U.S. Coast Guard Station Sheboygan, WI).

Economic Assessment and Certification

These regulations are considered to be non-major under Executive Order 12291 on Federal Regulation and nonsignificant under Department of Transportation regulatory policies and procedures (44 FR 11034; February 26, 1979). Because of the short duration of these regulations, their economic impact has been found to be so minimal that a full regulatory evaluation is unnecessary.

Since the impact of these regulations is expected to be minimal, the Coast Guard certifies that they will not have a significant economic impact on a substantial number of small entities.

Federalism

This action has been analyzed in accordance with the principles and criteria contained in Executive Order 12612, and it has been determined that this rulemaking does not have sufficient federalism implications to warrant the preparation of a Federalism Assessment.

List of Subjects in 33 CFR Part 100

Marine safety, Navigation (water).

Regulations

In consideration of the foregoing, part 100 of title 33, Code of Federal Regulations is amended as follows:

PART 100—[AMENDED]

1. The authority citation for part 100 continues to read as follows:

Authority: 33 U.S.C. 1233; 49 CFR 1.46 and 33 CFR 100.35.

2. Part 100 is amended to add a temporary § 100.35-0914 to read as follows:

§ 100.35-0914 Sheboygan Independence Day Celebration, Sheboygan Harbor, Lake Michigan, Sheboygan, WI.

(a) *Regulated area:* That portion of Lake Michigan and Sheboygan Harbor bounded at the northwest corner by the shore at position 43 degrees 46 minutes North; then south along the shore to the beginning of the breakwall; thence east along the breakwall out to the end of the breakwall; then east to position 43 degrees 45 minutes North, 087 degrees 41.4 minutes West; thence north to 43 degrees 46 minutes North, 087 degrees 41.9 minutes West; then west to starting point.

(b) *Special Local Regulations:* (1) The above area will be closed to navigation and anchorage, except when expressly authorized by the Coast Guard Patrol Commander, from 3 p.m. (CDST) until 10 p.m. (CDST) on 4 July 1990.

(2) The Coast Guard will patrol the regulated area under the direction of a designated Coast Guard Patrol Commander. The Patrol Commander may be contacted on channel 16 (156.8 MHZ) by the call sign "Coast Guard Patrol Commander". Vessels desiring to transit the regulated area may do so only with prior approval of the Patrol Commander and when so directed by that officer. Vessels will be operated at bear steerageway, to reduce the vessel's wake to a minimum, and in a manner which will not endanger participants in the event or any other craft. The rules

contained in the above sentence shall not apply to participants in the event or patrol vessels operating in the performance of their assigned duties.

(3) The Patrol Commander may terminate the marine event or the operation of any vessel at any time it is deemed necessary for the protection of life and property.

(4) This section is effective from 3 p.m. (CDST) until 10 p.m.(CDST) on 4 July 1990.

Dated: May 30, 1990.

D.H. Ramsden,

Captain, U.S. Coast Guard, Acting Commander, Ninth Coast Guard District.

[FR Doc. 90-13146 Filed 6-6-90; 8:45 am]

BILLING CODE 4910-14-M

---

33 CFR Part 100

[CGD8-90-11]

Special Local Regulations; Cajun Offshore Grand Prix, Lake Pontchartrain, LA

AGENCY: Coast Guard, DOT.

ACTION: Final rule.

SUMMARY: Special local regulations are being adopted for the Cajun Offshore Grand Prix. This event will be held on June 9, 1990 from 1 p.m. until 3:30 p.m. on Lake Pontchartrain, LA. In case of postponement this event will be held on June 10, 1990 from 1 p.m. until 3:30 p.m. These regulations are needed to provide for the safety of life on navigable waters during the event.

EFFECTIVE DATES: These regulations become effective on June 9, 1990 at 12 p.m. and terminate on June 9, 1990 at 4 p.m. In case of postponement due to inclement weather this regulation will take effect on day June 10, 1990 at 12 p.m. and terminate on June 10, 1990 at 4 p.m.

FOR FURTHER INFORMATION CONTACT: CWO E.G. Mann, Assistant Operations Officer, U.S. Coast Guard Group New Orleans, LA. Tel: (504) 942-3069.

SUPPLEMENTARY INFORMATION: In accordance with 5 U.S.C. 553, a notice of proposed rulemaking has not been published and good cause exists for making them effective in less than 30 days from the date of publication. Following normal rulemaking procedures would have been impracticable. The details of the event were not finalized until May 15, 1990 and there was not sufficient time remaining to publish proposed rules in advance of the event or to provide for a delayed effective date.

Nevertheless, interested persons wishing to comment may do so by submitting written views, data or arguments. Commentators should include their name and address, identify this notice (CGD8-90-11) and the specific section of the proposal to which the comments apply, and give reasons for comment. Receipt of comments will be acknowledged if a stamped self-addressed envelope is enclosed. The regulations may change in light of comments received.

Drafting Information

The drafter of this regulation is LT Michael F. Leonard, Project Officer, Coast Guard Group New Orleans, LA and LT J.A. Wilson, Project Attorney, Eighth Coast Guard District Legal Office.

Discussion of Regulation

The marine event requiring this regulation is called "The Cajun Offshore Grand Prix." This event is sponsored by the Southern Offshore Racing Association. It will consist of approximately 50-70 race boats traveling in excess of 90 mph. The course followed by the race will be marked by buoys positioned at various points along its several straightaways and turns. The regulated area will encompass the entire race area.

Approximately 1,000 spectator boats are expected for the event. While viewing the event at any point outside the regulated area is not prohibited, spectators will be encouraged to congregate within designated spectator areas. These areas will be defined by buoys and are located as follows:

West Spectator Area

Along the west side of the regulated area between 17th Street Canal and the Causeway.

South Spectator Area

(1) Along the south side of the regulated area between Pontchartrain Beach and New Orleans Lakefront Airport.

(2) The entire entrance area of Bayou St. John.

List of Subjects in 33 CFR Part 100

Marine Safety, Navigation (water).

Regulations

In consideration of the foregoing, part 100 of title 33, Code of Federal Regulations, is amended as follows:

PART 100—[AMENDED]

1. The authority citation for part 100 continues to read as follows:

Authority: 33 U.S.C. 1233; 49 CFR 1.46 and 33 CFR 100.35.

2. A temporary § 100.35-8-90-11 is added to read as follows:

§ 100.35-8-90-11 Lake Pontchartrain, Louisiana.

(a) *Regulated area.* The following area will be closed to all vessel traffic: A triangle starting at a point 1.7 statute miles east of the Causeway on the South shore of Lake Pontchartrain near the West End Boat Launch (latitude 30-01.8N, longitude 090-07.0W) along the south shore to a point 1.1 statute miles east of the Lake Front Airport (latitude 30-02.8N, longitude 090-00.1W) then northwesterly 13.2 statute miles to the Bascule Bridges on the Causeway (latitude 30-15.0N, longitude 090-06.6W).

(b) *Special local regulation.* All persons and/or vessels not registered with the sponsors as participants or official patrol vessels are considered spectators. The "official patrol" consists of any Coast Guard, public, state or local law enforcement and/or sponsor provided vessels assigned to patrol the event.

(1) No spectators shall anchor, block, loiter in or impede the through transit of participants or official patrol vessels in the regulated area during the effective dates and times, unless cleared for such entry by or through an official patrol vessel.

(2) When hailed and/or signaled, by an official patrol vessel, a spectator shall come to an immediate stop. Vessels shall comply with all directions given; failure to do so may result in a citation.

(3) The Patrol Commander is empowered to forbid and control the movement of all vessels in the regulated area. He may terminate the event at any time it is deemed necessary for the protection of life and/or property. He may be reached on VHF-FM Channel 16, when required, by the call sign "PATCOM".

(c) *Effective dates:* These regulations will be effective from 12 p.m. to 4 p.m. June 9, 1990. In case of postponement due to inclement weather this regulation will take effect on day June 10, 1990 at 12 p.m. and terminate at 4 p.m.

Dated: May 29, 1990.

T.D. Fisher,

Captain, U.S. Coast Guard, Commander, Eighth Coast Guard District Acting.

[FR Doc. 90-13244 Filed 6-6-90; 8:45 am]

BILLING CODE 4910-14-M

33 CFR Part 117

[CGD 11-90-04]

Drawbridge Operation Regulations

AGENCY: Coast Guard, DOT.

ACTION: Final rule.

SUMMARY: The Coast Guard is establishing a temporary drawbridge operation regulation for the Highway 12 drawbridge across the Mokelumne River east of Isleton, California (the Mokelumne River Bridge), to limit openings for recreational vessels to three times an hour during peak highway traffic periods on summer weekends. This temporary regulation is being established to reduce serious highway traffic congestion at the bridge. Since this action should accommodate all the needs of marine traffic expected to pass the bridge, its impact is expected to be minimal.

EFFECTIVE DATE: This rule becomes effective on May 25, 1990 and terminates on October 31, 1990.

FOR FURTHER INFORMATION CONTACT: Wayne R. Till, Chief, Bridge Section, Aids to Navigation Branch (telephone: (415) 437-3514).

SUPPLEMENTARY INFORMATION: A notice of proposed rule making has not been published for this regulation and it is being made effective in less than 30 days from the date of publication. Following normal rulemaking procedure would have been contrary to the public interest. Immediate action is needed to prevent serious highway traffic tieups on Highway 12, the principal east-west connecting roadway in the California Delta. A comment period is being provided during the entire period the temporary regulation is in force. A Local Notice to Mariners has been issued. A similar regulation was implemented at the bridge during August-September 1988 and was found to improve overland transportation without significant effect on water transportation.

This temporary regulation is considered to be non-major under Executive Order 12291 on Federal Regulation and nonsignificant under Department of Transportation regulatory policies and procedures (44 FR 11034, February 26, 1979). Since there is little economic impact, a full regulatory evaluation is unnecessary. This temporary regulation will have no appreciable consequences as it will not prohibit any vessels from using the waterway. Since the economic impact of this regulation is expected to be minimal, the Coast Guard certifies that it will not have a significant impact on a substantial number of small entities.

Drafting Information

The drafters of this rule are Wayne R. Till, project officer, and Lieutenant Commander John J. Jaskot, project attorney, Eleventh Coast Guard District Legal Office.

Discussion of Regulation

Highway 12 is the main east-west highway in the Sacramento-San Joaquin River Delta in northern California. It crosses three major recreational waterways on drawbridges: The Sacramento River at Rio Vista, the Mokelumne River east of Isleton, and Little Potato Slough at Terminous. Highway 12 carries as many as 1,200 vehicles per hour on holiday weekends and has traffic backups as long as 8 miles. The Little Potato Slough Bridge is under construction and beginning the first week of May 1990, larger recreational vessels must bypass that bridge by using the Mokelumne River or the Sacramento River. The additional vessel traffic will aggravate highway-marine traffic conflicts at the Mokelumne River Bridge and the Rio Vista Bridge.

Current regulations require the Mokelumne River Bridge to open on call from 6 a.m. until 10 p.m. during the summer. The temporary regulation will limit openings for recreational vessels to three times an hour during peak highway traffic periods on summer weekends. Those peak periods are from 10 a.m. to 2 p.m. Saturdays and from 11 a.m. to 6 p.m. Sundays. Openings for commercial vessels are infrequent on weekends, and it is not safe for commercial vessels to stop in the narrow channel. Accordingly, commercial vessels are excluded from this regulation and will be provided openings upon signal.

List of Subjects in 33 CFR Part 117

Bridges.

In consideration of the foregoing, part 117 of title 33 of the Code of Federal Regulations is revised as follows:

PART 117—DRAWBRIDGE OPERATION REQUIREMENTS

1. The authority citation for part 117 continues to read as follows:

Authority: 33 U.S.C. 499; 49 CFR 1.46 and 33 CFR 1.05-1(g).

Subpart B—Specific Requirements

2. Section 117.175 is amended by adding paragraph (a)(1) to read as follows:

§ 117.175 Mokelumne River.

* * * * *

(a) * * *

(1) During the period May 25, 1990 to October 31, 1990, the draw of the Mokelumne Bridge, mile 3.0, shall open upon signal, as specified in the permanent regulations, except that during the following periods the bridge need only open for recreational vessels on the hour, 20 minutes past the hour, and 40 minutes past the hour:

Saturdays 10 a.m. until 2 p.m.
Sundays 11 a.m. until 6 p.m.

* * * * *

Dated: May 21, 1990.

M.E. Gilbert,

Rear Admiral, U.S. Coast Guard, Commander, Eleventh Coast Guard District.

[FR Doc. 90-13243 Filed 6-6-90; 8:45 am]

BILLING CODE 4910-14-M

33 CFR Parts 162 and 165

[CGD 2-89-04]

Regulated Navigation Area: Ohio River at Louisville, KY; Mile 603.5 to 604.4

AGENCY: Coast Guard, DOT.

ACTION: Final rule.

SUMMARY: This rule clarifies the intent and scope of the existing restriction on the operation of pleasure and fishing craft passing through the Louisville and Portland Canal on the Ohio River at Louisville, Kentucky, by precluding the entrance of recreational boaters not intending to transit the lock. This is being done in order to reduce congestion and the likelihood of a marine casualty. This action has the potential of saving lives and property and will allow more vessels to transit the area efficiently and safely.

EFFECTIVE DATES: This rule is effective on July 9, 1990. Comments on this regulation must be received on or before September 5, 1990.

ADDRESSES: Comments should be mailed to Commander (dl), Second Coast Guard District, 1430 Olive Street, room 310, St. Louis, MO 63103-2398. Any comments received will be available for inspection and copying at the mailing address. Normal office hours are between 7:30 a.m. and 4:30 p.m., Monday through Friday, except holidays.

FOR FURTHER INFORMATION CONTACT: LTJG M.R. Stalker, Project Officer. Commercial: (502) 582-5194; FTS: 352-5194.

SUPPLEMENTARY INFORMATION: On August 9, 1989, the Coast Guard published a Notice of Proposed Rulemaking in the **Federal Register** (54 FR 32661). Interested persons were requested to submit comments by

September 25, 1989. Twelve comments were received.

Presently, the operation of pleasure and fishing craft in the restricted area is limited to "passing through the Louisville and Portland Canal"; "launching and docking at the Louisville, Kentucky, wharf within the restricted area"; and, "during open river conditions."

The existing restriction, applicable to recreational and fishing vessels, was enacted due to the narrow channel, numerous bridges, a sharp bend in the river, and heavy volume of commercial traffic transiting the McAlpine Lock and Dam. The impact of this rule is to clarify the existing regulation in order to allow passage through the McAlpine Lock but preclude the entrance of recreational boaters not intending to transit the lock. This will reduce congestion and the risk of a marine casualty in this constricted passageway.

As a result of the redevelopment of the Louisville, Kentucky Wharf, there is no longer sufficient space available for recreational boaters to launch and dock at the Wharf on a routine basis. The Wharf is used primarily by commercial passenger vessels, including the "Zachary Taylor II" and the "Belle of Louisville" support barge. The Coast Guard, therefore, found it necessary to restrict the launching and docking of pleasure and fishing craft at the Wharf to those obtaining prior permission of the Captain of the Port. The redevelopment of the Wharf area included erection of the large fountain which has become a tourist attraction for recreational boaters. The current regulatory language allows vessels to enter the area for "passage through the Louisville and Portland Canal" which leads to the McAlpine Lock. This language is being interpreted by mariners who wish to enter the area to view the fountain, as allowing them to turn around in the canal, conduct their sightseeing, and exit the area instead of proceeding through McAlpine Lock. This activity increases the already serious congestion. The Coast Guard is therefore revising the language of this exception by replacing the words "Louisville and Portland Canal" with the words "McAlpine Lock" to clarify the intent of the regulation. Consequently, vessels passing through McAlpine Lock may still transit the restricted area without permission of the Captain of the Port.

Although this regulation is published as a final rule, additional public comment is nevertheless desirable to ensure that the regulation is both workable and reasonable. Accordingly, persons wishing to comment may do so by submitting written comments on or before the date indicated to the office listed under "**ADDRESSES**" in this preamble. Commenters should include their names and addresses, identify the docket number for the regulation, and give reasons for their comments.

Drafting Information

The drafters of these regulations at LTJG Michael R. Stalker, Project Officer, Coast Guard Marine Safety Office, 600 Martin Luther King Jr. Place, room 360, Louisville, Kentucky, 40202–2230; and, LT Michael A. Suire, Project Attorney, Second Coast Guard District, 1430 Olive Street, St. Louis, Missouri, 63103–2398.

Discussion of Comments

Of the twelve comments received, ten comments were in favor of the proposal and two were opposed. The two comments opposing the proposed rule felt that the existing regulation is adequate and should not be changed. Of the favorable comments, five suggested that the phrase "open river conditions" is obsolete and subject to misinterpretation by the general boating public.

The comments received from the Army Corps of Engineers explained that the term "open river" was applicable when the navigable dam was in service, but that this has not been the case since 1962. A navigable dam was a configuration which could be lowered to the river bed during periods of high river flow allowing unencumbered passage over the dam structures. When the dam was lowered, the river was considered "open." The naviable dam was replaced in 1962 by the current non-navigable configuration. Based on the comments, the Coast Guard agrees that the term "during open river conditions" is no longer applicable to this area and it has been deleted in the Final Rule.

During review of the proposal, the Coast Guard also determined that this rule would be more appropriately placed in part 165 of title 33, Code of Federal Regulations, containing Regulated Navigation Areas and Limited Access Areas. Section 162.100 is thus redesignated as part 165, § 165.202.

Economic Assessment and Certification

These regulations are considered to be non-major under Executive Order 12291 on Federal Regulation and nonsignificant under Department of Transportation regulatory policies and procedures (44 FR 11034; February 26, 1979). The economic impact has been found to be so minimal that a full regulatory evaluation is unnecessary. The change merely clarifies the intent and scope of the existing restriction in order to reduce congestion and the likelihood of a marine casualty, thus potentially saving lives and property, and allowing more vessels to transit the area efficiently and safely.

Since the impact of this regulation is expected to be minimal, the Coast Guard certifies that it will not have a significant economic impact on a substantial number of small entities.

Environmental Assessment and Certification

This action has been reviewed in accordance with the principles and criteria contained in COMDTINST M16475.1 (series), NEPA Implementing Procedures, and it has been determined that the action will have no significant impact on the human environment. A copy of the Finding Of No Significant Impact Determination is available for review on the docket.

Federalism Assessment and Certification

This action has been analyzed in accordance with the principles and criteria contained in Executive Order 12612, and it has been determined that the action does not have sufficient Federalism implications to warrant preparation of a Federalism Assessment. As noted above this rulemaking merely clarifies the existing restrictions in the interest of maritime and public safety.

List of Subjects in 33 CFR Parts 162 and 165

Harbors, Marine safety, Navigation (water), Security measures, Vessels, Waterways.

Final Regulation

In consideration of the foregoing, parts 162 and 165 of title 33, Code of Federal Regulations, are amended as follows:

PART 162—[AMENDED]

1. The authority citation for part 162 continues to read as follows:

Authority: 33 U.S.C. 1231; 49 CFR 1.46.

2. The authority citation for part 165 continues to read as follows:

Authority: 33 U.S.C. 1225 and 1231; 50 U.S.C. 191; 49 CFR 1.46 and 33 CFR 1.05–1(g), 6.04–1, 6.04–6 and 160.5.

3. In 33 CFR § 162.100 is redesignated as § 165.202 and revised to read as follows:

§ 165.202 Ohio River at Louisville, KY: regulated navigation area.

(a) The following is a regulated navigation area: The waters of the Ohio

River from the Clark Memorial (Highway) Bridge at Mile 603.5, downstream to McAlpine Dam at Mile 604.4.

(b) The general regulations governing regulated navigation area contained in 33 CFR part 165, subpart B apply.

(c) No pleasure or fishing craft shall be operated within the regulated navigation area at any time without prior permission of the Captain of the Port, Louisville, Kentucky, except in case of emergency and except for passage through McAlpine Lock.

Dated: May 3, 1990.

Robert T. Nelson,

Rear Admiral, U.S. Coast Guard, Chief, Office of Navigation Safety and Waterway Services.

[FR Doc. 90-12669 Filed 6-6-90; 8:45 am]

BILLING CODE 4910-14-M

Proposed Rules

Federal Register
Vol. 55, No. 110
Thursday, June 7, 1990

This section of the FEDERAL REGISTER contains notices to the public of the proposed issuance of rules and regulations. The purpose of these notices is to give interested persons an opportunity to participate in the rule making prior to the adoption of the final rules.

DEPARTMENT OF AGRICULTURE

Agricultural Marketing Service

7 CFR Parts 982 and 999

[Docket No. FV-89-103PR]

Filberts/Hazelnuts Grown in Oregon and Washington; Proposed Changes in Quality Requirements for Domestic and Imported Shelled Filberts/Hazelnuts

AGENCY: Agricultural Marketing Service, USDA.

ACTION: Proposed rule.

SUMMARY: This proposed rule invites comments on changes in the quality requirements for domestic shelled filberts/hazelnuts by reducing from 2 percent to 1 percent the tolerance for the major defects of mold, insect injury, randcidity, or decay. The Filbert/Hazelnut Marketing Board (Board), established under the marketing order for filberts/hazelnuts, recommended the change to help assure the quality of shelled filberts/hazelnuts consumed in the United States. If adopted as a final rule, the change also would require imports of filberts/hazelnuts to meet the same quality requirements as applicable to domestic shipments of filberts/hazelnuts under the marketing order.

DATES: Comments must be received by July 9, 1990.

ADDRESSES: Interested persons are invited to submit written comments concerning this proposal. Comments must be sent in triplicate to the Docket Clerk, F&V, AMS, USDA, room 2525-S, P.O. Box 96456, Washington, DC 20090-6456. All comments should reference the docket number and the date and page number of this issue of the **Federal Register** and will be made available for public inspection in the Office of the Docket Clerk during regular business hours.

FOR FURTHER INFORMATION CONTACT: Patricia A. Petrella, Marketing Specialist, Marketing Order Administration Branch, Fruit and Vegetable Division, AMS, USDA, room 2525-S, P.O. Box 96456, Washington, DC 20090-6456; telephone: (202) 475-3920.

SUPPLEMENTARY INFORMATION: This proposed rule is issued under Marketing Agreement and Order No. 982 (7 CFR part 982), as amended, regulating the handling of filberts/hazelnuts grown in Oregon and Washington. This order is effective under the Agricultural Marketing Agreement Act of 1937, as amended (7 U.S.C. 601-674), hereinafter referred to as the Act.

This proposed rule has been reviewed by the U.S. Department of Agriculture (USDA) in accordance with Departmental Regulation 1512-1 and the criteria contained in Executive Order 12291 and has been determined to be a "non-major" rule under criteria contained therein.

Pursuant to requirements set forth in the Regulatory Flexibility Act (RFA), the Administrator of the Agricultural Marketing Service (AMS) has considered the economic impact of this proposal on small entities.

The purpose of the RFA is to fit regulatory actions to the scale of business subject to such actions in order that small businesses will not be unduly or disproportionately burdened. Marketing orders issued pursuant to the Act, and rules issued thereunder, are unique in that they are brought about through group action of essentially small entities acting on their own behalf. Thus, both statutes have small entity orientation and compatibility.

There are approximately 25 handlers of filberts/hazelnuts subject to regulation under the filberts/hazelnut marketing order, 16 importers subject to the import regulations, and approximatley 1,000 filberts/hazelnut producers in the Oregon and Washington production area. Small agricultural producers have been defined by the Small Business Administration (13 CFR 121.2) as those having annual receipts for the last three years of less than $500,000, and small agricultural service firms are defined as those whose gross annual receipts are less than $3,500,000. The majority of handlers and producers of Oregon and Washington filberts/hazelnuts and importers of filberts/hazelnuts may be classified as small entities.

This proposed rule would change the quality requirements for domestic shelled filberts/hazelnuts regulated under the Federal marketing order. A corresponding change would be made in § 999.400 of the import regulations which affect imported shelled filberts/hazelnuts.

Currently, § 982.101 of the grade and size regulations under the filberts/hazelnut marketing order specifies a tolerance of 5 percent for defects of shelled filberts/hazelnuts. A total of 2 percent of the kernels can have the major defects of mold, rancidity, decay, or insect injury. However, only 1 percent can be defective for reasons of mold, rancidity, or insect injury. Thus, up to 2 percent of the kernels could have the major defect of decay, which means the decomposition of any portion of the kernel. The Board has recommended that the overall 2 percent tolerance for all major defects be reduced to 1 percent. Therefore, the tolerance for the major defects of mold, rancidity, decay, or insect injury would be 1 percent.

The Board has indicated that most domestic handlers pack shelled filberts/hazelnuts to comply with Oregon No. 1 Whole and Broken grade standards, which specify a 1 percent tolerance for mold, rancidity, decay, or insect injury. The domestic industry believes that if the marketing order tolerance level for major defects is not reduced that some handlers are likely to begin packing at the 2 percent level to decrease processing costs, thus increasing the problem of an inconsistent quality of filberts/hazelnuts being supplied to consumers.

The Board's recommendation contained information provided by the USDA and the Oregon Agricultural Statistics Service which indicated that plantings of filberts/hazelnut trees have been relatively high since the mid 1970s. Accordingly, the industry has been anticipating a large increase in production. Data compiled by the USDA's Economic Research Service indicates that filberts/hazelnuts continue to have the lowest per capita consumption of all major nuts. The Board believes the recommended amendment to the grade and size regulation would further emphasize the industry's desire to market a quality product by requiring all handlers to meet the 1 percent tolerance level for major defects.

The Board has also recommended generic marketing development and

promotion programs for the 1988–89, 1989–90, and 1990–91 marketing years. The program activities include participating and advertising in trade shows, developing recipes, distributing sample packages, and studying different market areas. Through these promotional activities, the Board expects to increase the awareness and use of high quality filberts/hazelnuts, particularly to the baking industry, food manufactureres, and home economists. The total expenditures for this year's promotion program is $200,000. The Board wishes to further advance the goals of this program by providing improved consistency in the quality of filberts/hazelnuts that are available to the domestic market. The Board's recommendation is that this should be accomplished by reducing the tolerance for major defects, including decay, to 1 percent.

Section 8e of the Act required filberts/hazelnuts offered for importation to meet the same or comparable requirements applied to domestic filberts/hazelnuts under the Federal marketing order. Therefore, all imported shelled filberts/hazelnuts would be required to meet the recommended 1 percent tolerance level for mold, rancidity, decay, or insect injury under § 999.400 of the import regulations.

Similar changes in the filbert/hazelnut marketing order and import regulations were proposed in 1986 (51 FR 8201, March 10, 1986). At that time, importers argued that any reduction in the minimum grade tolerances would be unnecessarily restrictive, involve substantial costs to U.S. consumers, and would discriminate mainly against shelled filberts/hazelnuts from the main foreign supplier (Turkey) that may have a higher incidence of decay. The USDA withdrew the proposal (52 FR 5307, February 20, 1987) for further consideration.

The Board has renewed its recommendation because it continues to believe that low quality filberts/hazelnuts undermine the domestic market. The Board does not believe that this action is discriminatory to foreign suppliers or that it would significantly affect consumer costs.

Currently, there may be some concern by importers that the reduction of the tolerance level for decay would adversely affect their ability to import shelled filberts/hazelnuts. However, data compiled from USDA inspection certificates indicates that the percentage of imported shelled filberts/hazelnuts that would have passed the recommended 1 percent tolerance level for all four defects increased from 25 percent in 1986 up to 64 percent in 1988. The data also indicates that the number of imported lots have increased during the same time period. In 1986, 135 imported lots were inspected and 32 of those lots nearly one fourth would have passed the recommended tolerance level. In 1988, 295 imported lots were inspected and 182 lots would have passed the recommended tolerance level. These figures indicate that most imported filberts/hazelnuts could meet a 1 percent tolerance level. According to the Foreign Agricultural Service's statistics, Turkey produced 530,000 short tons (inshell weight) of filberts/hazelnuts in 1988 of which 9,000 short tons (inshell equivalent) were imported to the United States. The imported figure reflects about 2 percent of Turkey's total production. Based on these figures, the USDA does not believe that foreign suppliers would be adversely affected by this change.

This proposed action would provide a 30-day comment period for the receipt of written comments. The USDA is requesting comments on whether the subject reduction in the tolerance for major defects would contribute to an increase in domestic consumption of shelled filberts/hazelnuts and, if so, on what basis this conclusion is reached; on whether the subject change is necessary to increase such dometic consumption and for what reasons and in what specific markets; and on the probable impact of the subject change on domestic producers and consumers, commercial users and importers of shelled filberts/hazelnuts.

Based on available information, the Administrator of the AMS has determined that the issuance of this proposed rule would not have a significant economic impact on a substantial number of small entities.

List of Subjects

7 CFR Part 982

Filberts/hazelnuts, Marketing agreements, Nuts, and Reporting and recordkeeping requirements.

7 CFR Part 999

Dates, Filberts/hazelnuts, Food grades and standards, Imports, Nuts, Prunes, Raisins, Reporting and recordkeeping requirements, and Walnuts.

For the reasons set forth in the preamble, 7 CFR parts 982 and 999 are proposed to be amended as follows:

1. The authority citation for 7 CFR parts 982 and 999 continues to read as follows:

Authority: Secs. 1–19, 48 Stat. 31, as amended; 7 U.S.C. 601–674.

PART 982—FILBERTS/HAZELNUTS GROWN IN OREGON AND WASHINGTON

Subpart—Grade and Size Regulation

2. The tolerances in subparagraph (2) of Exhibit A of § 982.101 of Subpart—Grade and Size Regulation are revised to read as follows:

§ 982.101 Grade requirements for shelled filberts.

* * * * *

(b) * * *

Exhibit A

* * * * *

Tolerances

* * * * *

(2) *For Defects:* Five percent for kernels or portions of kernels which are below the requirements of this grade, including not more than the following: One percent shall be for mold, rancidity, decay, or insect injury.

* * * * *

PART 999—SPECIALTY CROPS; IMPORT REGULATIONS

3. The tolerances in subparagraph (2) of Exhibit A of § 999.400 are revised to read as follows:

§ 999.400 Regulation governing importation of filberts.

* * * * *

Exhibit A

Tolerances

* * * * *

(2) *For Defects:* Five percent for kernels or portions of kernels which are below the requirements of this grade, including not more than the following: One percent shall be for mold, rancidity, decay, or insect injury.

* * * * *

Dated: June 4, 1990.

Robert C. Keeney,

Deputy Director, Fruit and Vegetable Division.

[FR Doc. 90–13254 Filed 6–6–90; 8:45 am]

BILLING CODE 3410–02–M

NUCLEAR REGULATORY COMMISSION

10 CFR Part 61

[Docket No. PRM–61–1]

Sierra Club, North Carolina Chapter; Filing of an Amendment to a Petition for Rulemaking

AGENCY: Nuclear Regulatory Commission.

ACTION: Petition for rulemaking; receipt of amendment.

SUMMARY: The Nuclear Regulatory Commission is publishing for comment this notice of receipt of an amendment to a petition for rulemaking filed with the Commission on January 25, 1990 (PRM-61-1). This amendment to a petition, dated April 17, 1990, was filed by the Sierra Club, North Carolina Chapter. The amendment to the petition was docketed by the Commission on April 30, 1990, and assigned to the same docket as the original petition. The petitioner, in both the original petition and the amendment to that petition, requests that the Commission amend 10 CFR part 61 to adopt regulations that would permit the design and construction of a zero-release low-level radioactive waste disposal facility in a saturated zone. The petitioner asserts that amended regulations are necessary in order for the General Assembly of North Carolina to consider a waiver of a North Carolina statute which requires that the bottom of a low-level waste facility be at least seven feet above the seasonal high water table.

DATES: Submit comments August 6, 1990. Comments received after this date will be considered if it is practical to do so, but assurance of consideration cannot be given except as to comments received on or before this date.

ADDRESSES: Submit comments to: Secretary, U.S. Nuclear Regulatory Commission, Washington, DC 20555. Attention: Docketing and Service Branch. For a copy of the petition and the amendment to the petition, write: Rules Review Section, Regulatory Publications Branch, Division of Freedom of Information and Publications Services, Office of Administration, U.S. Nuclear Regulatory Commission, Washington, DC 20555.

FOR FURTHER INFORMATION CONTACT: Michael T. Lesar, Chief, Rules Review Section, Regulatory Publications Branch, Division of Freedom of Information and Publications Services, Office of Administration, U.S. Nuclear Regulatory Commission, Washington, DC 20555, *Telephone:* 301-492-7758 or Toll Free: 800-368-5642.

SUPPLEMENTARY INFORMATION:

Background

The Nuclear Regulatory Commission has received an amendment to a petition for rulemaking from the Sierra Club. This amendment to the petition for rulemaking is assigned to the same docket as the original petition for rulemaking (Docket No. PRM-61-1).

PRM-61-1

On April 12, 1990 (55 FR 13797), the NRC published a notice of receipt of a petition from the Sierra Club. The petitioner requested the Commission to promulgate regulations that would permit the construction and design of a zero-release low-level radioactive waste site to be placed entirely below the 100 year seasonal water table. The petitioner presented an alternative preferred environment for a multilevel containment system for NRC's consideration in promulgating the requested amendments. The specific proposal is as follows.

> The Sierra Club proposes that contained low-level radioactive waste be placed in constructed stagnant saturated zones, at a site meeting all other requirements. The zones would be within concrete modules, preferably cylindrical, the walls and base of which were made in a single pour so as to avoid cold joints. The base of the module would rest on a bitumen layer of appropriate thickness. After the wall forms were removed, the module walls would be coated with a similar bitumen layer. The inside of the module would also be given a water-impregnable coat of bitumen. Bitumen-coated and sealed water-impermeable concrete overpacks would be placed in this water-impermeable vault. When the vault has been filled with overpacks the void spaces would be filled with sand and fine gravel. A water solution of calcium hydroxide, a cement preservative, would fill the remaining voids. (This would extend the life of the concrete if unforseen exposure to water occurred.) An appropriate layer of bitumen would be placed over the vault content. A cement roof would be poured. When the cement has cured, a further layer of bitumen, bonded into the external bitumen layer, would be placed. The overpacks would be similarly void filled with sand and calcium hydroxide solution, receive a concrete cover and be bitumen sealed. "The topping-off of the overpacks and the vaults with a water solution offers the insurance that if a flaw in sealing develops there will be nil hydrostatic head between the vault content and the surrounding saturated zone. It also results in containment structures with a high compression modulus which will increase resistance to forces generated by overlay and by seismic events."

The Amendment

On April 25, 1990, the Sierra Club filed an amendment to its earlier petition. In the amendment to the original petition, the petitioner states that since filing the original petition, the petitioner has learned of new and relevant information regarding polymer and concrete technology. The petitioner requests that the Commission consider the new information on polymer concrete technology as an alternative means for realizing the objective of the original petition. The petitioner states that disposal structures which are essentially water impermeable will satisfy not only North Carolina G.S. 104E-25(f), but should qualify for siting below the water table.

Supporting Statement

The petitioner states that there are a variety of products made of polymers and aggregates and believes that polymer impregnated Portland cement concrete is a promising product for use in the concrete structure of low-level radioactive waste disposal units. The petitioner believes polymer impregnated concrete should be considered because of its water impermeability, durability, and strength.

The petitioner offers that several industries produce a variety of products that include polymer concrete, such as: airplane runways; salt impermeable road surfaces; stills for saline water; stronger, more fatigue resistant beams; and fast acting materials for damaged or failing concrete structures.

The petitioner believes that the combination of polymer impregnated concrete (PIC) or polymer concrete (PC) with fiber reinforcement offers materials of great promise for economically meeting the requirements of concrete structures for the engineered confinement of low-level radioactive waste which are both durable and water impermeable. The petitioner states that the durability of the Portland cement component in PIC will increase because water flux is eliminated. The petitioner further states that PC will benefit by fiber reinforcement; that the improvement in the physical properties of plastics by glass fiber reinforcement is well established. The petitioner believes the permeability of appropriately designed PIC's and PC's to dissolved radioactive materials would be expected to be nil.

Bitumen, the sealant recommended in the original petition, the petitioner states is a polymer and has many of the desirable void-filling, water excluding properties of impregnating or cementing polymers. The petitioner states that bitumens are formed by natural processes, rather than synthetically, however; the petitioner does not know whether bitumen impregnation would favorably affect the physical properties of Portland cement concrete. The petitioner recommends that bitumens and polymers be compared from a cost-performance basis.

Given the properties of both FPIC (fiber reinforced polymer impregnated Portland cement concrete) and FPC (fiber reinforced polymer concrete), the petitioner asserts it will be possible to lessen the uncertainties about failure

over the long term by using the two technologies in tandem. The petitioner states that if one has unanticipated faults, the other may not.

Petitioner's Amended Proposal

The use of FPIC overpacks seems quite feasible. Overpacks are cast in forms. They are of a size where oven drying, air evacuation, pressure impregnation, and radiation induced polymerization are practicable. A four-fold or greater reduction in mass per overpack could be obtained without sacrificing strength requirements. The reduction in overpack external dimensions would result in an increase in the waste capacity of a given size vault. An FPIC overpack would be to all practical intents water impermeable and waste impermeable. It would be a first line of defense for failure of the waste container. A vault would preferably be constructed of FPC. The FPC technology closely parallels Portland cement concrete technology. A probable advantage would be the avoidance of joint problems. FPC materials bond well to materials already in place. In all likelihood a single pour would not be required. The vault roof would bond to the walls and not require a seal. Because the structure is intrinsically water and waste impermeable, it would not be necessary to treat internal and external vault surfaces with sealing agents. The problem of calcium hydroxide leaching by ground water, a major weakness of Portland cement, would not exist. The broad selection of structurally suitable polymers makes likely the utilization of a polymer chemically stable in a groundwater environment.

Conclusion

The petitioner states that these two technologies make possible as much as a fourfold reduction in the volume of enclosure materials used to contain a given waste volume. The petitioner further states that these material savings would compensate, or more than compensate, for the higher costs of materials and manufacturing process.

Errata

The petitioner has also taken this opportunity to correct an error in the original petition. The fraction of projected activity provided by longer half-life radionuclides on closing the Southeast Compact facility after 20 years of operation is changed from 15.6 percent to 6.4 percent.

Dated at Rockville, Maryland, this 1st day of June 1990.

For the Nuclear Regulatory Commission.

Samuel J. Chilk,

Secretary of the Commission.

[FR Doc. 90-13229 Filed 6-6-90; 8:45 am]

BILLING CODE 7590-01-M

FEDERAL RESERVE SYSTEM

12 CFR Part 210

[Reg. J; Docket No. R-0697]

Funds Transfers Through Fedwire

AGENCY: Board of Governors of the Federal Reserve System.

ACTION: Notice of proposed rulemaking.

SUMMARY: The Board has adopted a proposed comprehensive revision of subpart B to Regulation J to make it consistent with the new Article 4A of the Uniform Commercial Code, Funds Transfers. The proposed revision sets out the rules governing funds transfers through Fedwire, as well as commentary to the proposed regulation that would constitute a Board interpretation of the regulation.

DATE: Comments must be submitted on or before August 6, 1990. No extension of time for comment will be provided.

ADDRESSES: Comments, which should refer to Docket No. R-0697, may be mailed to the Board of Governors of the Federal Reserve System, 20th and C Streets NW., Washington, DC 20551, Attention: Mr. William W. Wiles, Secretary; or may be delivered to Room B-2223 between 8:45 a.m. and 5:00 p.m. All comments received at the above address will be included in the public file.

FOR FURTHER INFORMATION CONTACT:

Oliver Ireland, Associate General Counsel (202/452-3625) or Colleen McCall, Staff Attorney (202/452-6406), Legal Division; or

Louise L. Roseman, Assistant Director, Division of Federal Reserve Bank Operations (202/452-3874);

For the hearing impaired only: Telecommunications Device for the Deaf, Earnestine Hill or Dorothea Thompson (202/452-3544).

SUPPLEMENTARY INFORMATION: For many years, the Regulation J provisions on funds transfers handled by Federal Reserve Banks constituted the only codified body of law applicable to funds transfers. Although subpart B of Regulation J specified the rules applicable to the funds transfers handled by Federal Reserve Banks, there were no codified rules, other than private agreements governing wholesale funds transfers handled by other banks, or by private funds-transfer systems.[1] Further, Regulation J did not provide comprehensive rules for the relationship between banks and their customers that were parties to funds transfers handled by Federal Reserve Banks. Although there was no comprehensive body of statutory or regulatory law on wholesale funds transfers (and only limited case law has developed in this area), the number and dollar volume of funds transfers in the United States has grown to very high levels. More than 350,000 funds transfers, with a total value between $1 trillion and $2 trillion, are processed in the United States each day over the Fedwire and CHIPS systems.

To provide a legal framework for these transactions, several years ago the National Conference of Commissioners on Uniform State Laws, the sponsoring organization for the Uniform Commercial Code and other uniform state laws, undertook to develop a new Article 4A to the Uniform Commercial Code on funds transfers. This project was completed in 1989 with the assistance of representatives of the banking and the corporate user community, as well as the Federal Reserve System. Article 4A has already been adopted in several states, and has been introduced in the legislatures of a number of other states. The Board expects that Article 4A will become effective in many of these states by January 1991 and will be adopted in most, if not all, remaining states within the next few years.[2]

Article 4A provides comprehensive rules governing the rights and responsibilities of the parties to wholesale funds transfers.[3] These rights and responsibilities include: responsibility for unauthorized, erroneous, or erroneously executed funds transfers, risks of loss associated with the failure of a bank handling a funds transfer, responsibilities to pay for and the right to receive payment for funds transfers, and the effect of payment by funds transfer on any contractual obligation between an originator and a beneficiary underlying a funds transfer.

[1] In 1978, Congress adopted the Electronic Fund Transfer Act to establish consumer rights in funds transfers. 15 U.S.C. 1693 *et seq.* This Act does not apply, however, to wire transfers sent through Fedwire. 15 U.S.C. 1693a(6)(B).

[2] Copies of Article 4A are available upon request from the Board's Public Affairs Office.

[3] Transactions covered by Article 4A include wire transfers sent over Fedwire or CHIPS, book transfers, and automated clearing house ("ACH") credit transfers, other than ACH transfers subject to the Electronic Fund Transfer Act. Currently, that Act does not cover preauthorized ACH transfers received by a financial institution with assets of $25 million or less, if the institution does not provide any other electronic payment services to its consumer customers (*see* 12 CFR 205.3(g)). Consequently, these transfers would be subject to Article 4A. Subpart B does not apply to any ACH transfers.

Although many of the concepts embodied in the current version of subpart B of Regulation J are similar to those embodied in Article 4A, a number of the subpart B provisions are inconsistent with the structure of Article 4A, and the terminology of subpart B and Article 4A differ substantially.

The Board is proposing to revise subpart B of Regulation J so as to apply Article 4A to funds transfers handled by Federal Reserve Banks, subject to a limited number of modifications and clarifications that are consistent with the purposes of Article 4A and that generally could be made by a private funds-transfer system by means of a funds-transfer system rule under Article 4A.[4] This revision to subpart B would: (1) Provide a more comprehensive set of rules for funds transfers involving Federal Reserve Banks than is currently provided by subpart B; (2) make subpart B consistent with state laws applicable to funds transfers as states adopt Article 4A; and (3) help to ensure that, subject to their central banking responsibilities, Federal Reserve Banks compete on an equitable basis with private-sector providers of funds-transfer services. Because it expects Article 4A to become effective in a number of states by January 1991, the Board anticipates that it will adopt a final revised subpart B of Regulation J, effective January 1, 1991.

Scope

The proposed revision to subpart B would incorporate those provisions of Article 4A into subpart B that are not inconsistent with the provisions set forth expressly in subpart B. Thus, Article 4A would apply to transactions involving Federal Reserve Banks even if the state in which the Federal Reserve Bank is located had not yet adopted Article 4A. The Board believes that this incorporation is necessary to ensure that the law applicable to funds transfers involving Federal Reserve Banks is uniform for all Fedwire funds transfers, regardless of the location of the banks involved in the funds transfer. Consistent with the provisions of Article 4A concerning the choice of law by rules of private funds-transfer systems, subpart B would apply to all banks sending payment orders to or receiving payment orders from Federal Reserve Banks as well as to any remote parties to the funds transfers. This "end-to-end" coverage of funds transfers through Federal Reserve Banks ensures that the scheme of rights and liabilities under Article 4A operates effectively. For example, under Article 4A, an originator [5] of a funds transfer is discharged from any underlying payment obligation to a beneficiary of a funds transfer when the beneficiary's bank accepts the funds transfer (*see* section 4A–406(a)). If the beneficiary's bank does not accept the funds transfer, the originator has a "money-back guarantee" and does not have to pay for the funds transfer unless the failure to complete the funds transfer is due to the failure of an intermediary bank designated by the originator (*see* section 4A–402). Thus, it is necessary to apply subpart B to originators and beneficiaries of funds transfers involving Federal Reserve Banks so that the provisions applicable to the banks handling such funds transfers will function with the provisions applicable to their customers.[6]

Although applying subpart B to the customer-bank relationship of banks sending or receiving funds transfers through Federal Reserve Banks provides a consistent body of law applicable to these funds transfers, it will also place responsibilities on these banks that are not expressly provided for under subpart B or other current law. For example, Article 4A requires all banks to adopt commercially reasonable security procedures or assume liability for unauthorized funds transfers (*see* sections 4A–202 and 4A–203). Similarly, a beneficiary's bank that accepts a funds transfer handled by a Federal Reserve Bank generally must notify the beneficiary of receipt of the payment order by midnight of the next funds-transfer business day after receipt of the funds transfer and the beneficiary's bank must pay the beneficiary on the day the transfer is made (*see* section 4A–404). While these, and possibly other, requirements of Article 4A may require operating changes at banks using Fedwire, the Board expects that these changes ultimately will be required by state law and that they are desirable at this time in order to ensure a comprehensive legal framework for Fedwire funds transfers.

Liability

Under the current subpart B, Federal Reserve Banks are liable to banks sending funds transfers directly to them for mishandling funds transfers. This liability does not extend to beneficiaries or originators of funds transfers, other than those sending funds transfers directly to Federal Reserve Banks, and excludes liability for consequential damages, such as the opportunity cost of a transaction that was not completed because of a problem with a Fedwire funds transfer. Under Article 4A, a bank handling a funds transfer, such as a Federal Reserve Bank, may be liable (1) to a bank sending a payment order to it for principal and interest for executing an unauthorized payment order (*see* section 4A–204), or (2) to the originator or beneficiary of a funds transfer for interest for a delay in executing a funds transfer or delay in notifying the beneficiary of receipt of a funds transfer (*see* sections 4A–302 and 4A–305). The parties to whom a Federal Reserve Bank may be liable under Article 4A are broader than the parties to whom a Federal Reserve Bank may be liable under the current subpart B. Therefore, Federal Reserve Banks may incur liability under Article 4A in situations where they would not incur liability under current subpart B. Nevertheless, the Board believes that it is appropriate to apply the Article 4A liability provisions to Federal Reserve Banks both because the liability scheme adopted by Article 4A is integral to its operative rules, and because it results in the Federal Reserve Banks assuming liabilities comparable to those assumed by private-sector banks.

Although the revised subpart B would result in a change in the Federal Reserve Banks' liability in connection with the handling of funds transfers, it would continue the current procedure established under subpart B of using "as of adjustments" to compensate banks dealing with a Federal Reserve Bank for lost interest due to Federal Reserve Bank errors in handling a funds transfer

[4] Under section 4A–107, Federal Reserve regulations and operating circulars supersede inconsistent provisions of Article 4A. In addition, under the Expedited Funds Availability Act, the Board has broad authority to issue regulations concerning the payments system. In proposing the revised Subpart B, the Board has not relied extensively on these unique powers and has attempted to treat Federal Reserve Banks like private-sector banks.

[5] Under Article 4A, an "originator" of a funds transfer is the first party, often a bank customer, to initiate the series of payment orders that comprise a funds transfer. The "beneficiary" is the person to be paid under the funds transfer.

[6] These provisions would not apply to those originators and beneficiaries that are not aware that the funds transfer may be sent through Fedwire. This limitation ensures that customers are aware of the rules that apply to their transactions. To encourage banks to notify their customers that Fedwire may be used for their funds transfers, the proposed subpart B includes a warranty by the bank sending or receiving a funds transfer through Fedwire that all remote parties to the transfer have been provided such a notice. Provision of this notice to originators and beneficiaries of funds transfers through Fedwire also extends the Article 4A limitation on consequential damages to claims against Federal Reserve Banks by originators and beneficiaries of transfers through Fedwire. The Board expects that private funds-transfer systems will require similar warranties or employ other similar means to ensure that originators and beneficiaries are notified of the use of their funds-transfer system.

or to recover float. An as of adjustment is a memorandum credit or debit that is applied to a reserve or clearing balance position of a bank. These adjustments affect the level of reserve or clearing balances that the bank must fund by other means and are therefore an effective substitute for explicit interest payments. Under the proposed revision to subpart B, banks would be required to pass as of adjustments on to their customers by explicit interest payments or other means agreed to by the bank's customer. Where compensation for interest by means of an as of adjustment would not be useful to the bank entitled to it—e.g., if it meets its reserve requirements through vault cash and had no reserve or clearing balance requirement—the Federal Reserve Bank would pay explicit interest to discharge any obligation to pay interest under Article 4A.

Miscellaneous

In addition to the issues of scope and liability discussed above, the proposed revision to subpart B defines terms not defined in Article 4A; notifies users of Fedwire that Reserve Banks will exercise their right under Article 4A to rely on account numbers; specifies sending banks' duties to pay for funds transfers sent over Fedwire and to secure overdrafts; grants Federal Reserve Banks a security interest in certain collateral; requires off-line receiving banks to notify their Federal Reserve Bank if they maintain accounts for respondent banks, so that the Federal Reserve Bank will execute all payment orders, including settlement transfers, on a timely basis; [7] specifies the means of payment by Federal Reserve Banks to banks receiving payment orders over Fedwire; and addresses the timing and routing of Fedwire funds transfers. The details of these provisions are set forth more fully in the proposed regulation and commentary.

Competitive Impact Analysis

The Board recently formalized its procedures for assessing the competitive impact of changes that have a substantial effect on payments-system participants.[8] Under these procedures, the Board will assess whether the proposed change would have a direct and material adverse effect on the ability of other service providers to compete effectively with the Federal Reserve in providing similar services due to differing legal powers or constraints or due to a dominant market position of the Federal Reserve deriving from such legal differences. The following is a section-by-section competitive impact analysis of the proposed revision to subpart B of Regulation J.

Section 210.25—Authority, Purpose, and Scope

Article 4A provides that most, but not all, of its provisions may be varied by agreement of the affected parties, or by a funds-transfer system rule (*see* section 4A–501). A funds-transfer system rule may select the law of a particular State to govern the rights and obligations of the participants in the funds-transfer system, and to govern the rights and obligations of remote parties in the transfer to the extent they were given notice that the funds-transfer system may be used, and of the choice of law of that system (*see* section 4A–507). The Federal Reserve can supersede any portion of Article 4A by Board regulation or Federal Reserve Bank Operating Circular (*see* section 4A–107). In addition, the Board can preempt Article 4A provisions under its authority pursuant to the Expedited Funds Availability Act (12 U.S.C. 4001 *et seq.*) to regulate any aspect of the payments system in order to expedite availability of funds or otherwise carry out the provisions of that Act.

The Board does not believe that the proposed subpart B supersedes or preempts any express provisions of Article 4A. The proposed subpart B generally varies Article 4A provisions only to the extent that such provisions could be varied by agreement or by a private-sector funds-transfer system rule. In addition, the scope of applicability of subpart B is equal to that of a funds-transfer system rule that adopts a choice of law provision. Specifically, proposed subpart B governs only parties in privity with Federal Reserve or remote parties that received notice that Fedwire may be used to make the funds transfer and of the law governing Fedwire transfers.

Under §§ 210.28(c) and 210.29(c) of the proposed regulation, parties in privity with the Federal Reserve warrant that remote parties to the funds transfer have been given notice that Fedwire may be used to make the funds transfer and that subpart B governs Fedwire funds transfers. These warranties are consistent with the Article 4A provision that funds-transfer system rules may bind remote parties to the transfer to the extent that the remote parties received notice (*see* section 4A–507(c)). A funds-transfer system rule may require participants in the system to provide this notice to remote parties, or require that participants warrant to each other that such notices have been provided, thereby giving the participants the option of providing the notice or assuming legal responsibility for failure to provide the notice (*see also* analyses to §§ 210.28 and 210.29). Similarly, banks may require their customers to either notify remote parties or warrant that such notice has been given.

In the case of a funds transfer involving both Fedwire and another funds-transfer system, such as CHIPS, subpart B will preempt any inconsistent funds-transfer system rule or agreement applicable to a remote party that received notice that Fedwire may be used to make the transfer and of the governing law. The prefatory note to Article 4A explains that Article 4A provides a needed comprehensive body of law governing wholesale wire transfers, and thus removes the great deal of uncertainty that currently exists, particularly with respect to parties to a transfer that are not direct participants in the funds-transfer system that is used. The Board believes that conflicts between funds-transfer system rules under Article 4A may arise. Having subpart B take precedence over private funds-transfer system rules is consistent with the objective of Article 4A to provide certainty of law in the case of conflicting provisions of subpart B and the rules of a funds-transfer system that is also used in the transfer. Because subpart B parallels closely the Article 4A provisions, the Board does not believe that there will be many instances where private-sector funds-transfer system rules would be inconsistent with, and thus preempted by, the provisions of subpart B.

The Board does not believe that the scope of proposed subpart B, or the approach taken in incorporating the Article 4A provisions in this subpart, would have an adverse competitive effect.

Section 210.26—Definitions

Proposed subpart B generally incorporates the definitions set forth in Article 4A, and includes definitions of other terms not defined in Article 4A. The proposed subpart modifies the definitions of two Article 4A terms—

[7] This warranty is consistent with a recent Board proposal that the Federal Reserve Banks notify by telephone all off-line depository institutions of the receipt of incoming Fedwire third-party funds transfers and incoming Fedwire settlement transfers if the receiving bank maintains accounts for respondent institutions (*see* 55 FR 18758, April 30, 1990).

[8] These procedures are described in the Board's policy statement titled "The Federal Reserve in the Payments System," which was revised in March 1990.

"beneficiary's bank" and "payment order."

The subpart B definition of "beneficiary's bank" clarifies that a Federal Reserve Bank may be a beneficiary's bank even though it is not explicitly identified as such in the payment order. This appears to be consistent with the intent of Article 4A, although the Article 4A definition does not contemplate a bank acting as a beneficiary's bank without being designated as such in the payment order.

Proposed subpart B also provides that a Federal Reserve Bank that is the beneficiary of a payment order is also deemed to be the beneficiary's bank on the payment order. Under Article 4A, the bank that sends the payment order to the Federal Reserve Bank as beneficiary would be considered the beneficiary's bank. In the context of Fedwire payment orders, deeming a Federal Reserve Bank to be the beneficiary's bank as well as the beneficiary of a payment order does not have any practical operational or legal impact on the other parties to the funds transfer. The Board does not believe that these changes would have an adverse competitive effect.

The subpart B definition of payment order excludes ACH transfers, which are subject to a separate Federal Reserve Bank Operating Circular, and excludes certain messages, such as service messages, which are not intended to be payment orders under Article 4A. The Board does not believe that this definition would have any adverse competitive effect.

Section 210.27—Reliance on Identifying Number

Article 4A provides that a bank may rely on the number in the payment order identifying an intermediary bank, the beneficiary's bank, or the beneficiary, even if the number is inconsistent with the name, if the bank does not know that the name and number refer to different persons (*see* sections 4A–207 and 4A–208). The originator is obligated to pay the payment order (in the case of reliance on the number of beneficiary) and the sender is obligated to compensate the receiving bank for any loss or expenses incurred (in the case of reliance on the number of the intermediary bank or beneficiary's bank) if the number was relied upon and the originator or sender is a bank or if the originator or sender is a nonbank that had notice of the possible reliance on the number.

Proposed subpart B includes provisions providing notice to nonbank senders that Federal Reserve Banks may rely on the numbers in the payment orders identifying the intermediary bank, the beneficiary's bank, and the beneficiary. Federal Reserve Banks will provide the subpart B rules to their nonbank senders, in part, to ensure that these provisions serve as actual notice to these senders. Therefore, this notice would be provided by means similar to those that the Board presumes banks will use to give this notice to their nonbank senders, and would not have any adverse competitive effect.

Section 210.28—Agreement of Sender

This section provides that a sender authorizes its Federal Reserve Bank to obtain payment for a payment order by debiting the sender's account at the Federal Reserve Bank. In addition, this section provides that a sender does not have a right to an overdraft in its account, when overdrafts that are incurred become due and payable, and what actions a Federal Reserve Bank may take to recover the amount of an overdraft or to secure an overdraft. The Board does not believe that these provisions would have an adverse competitive effect because: (1) A sender does not have a right to overdraft its Federal Reserve account, (2) the requirements are reasonable, and are not obtainable solely due to unique bargaining position of the Federal Reserve, and (3) a private-sector bank could impose similar requirements on its customers to which it gives overdraft privileges.

This section also provides that a sender of a payment order to a Federal Reserve Bank warrants that all prior senders have been notified of the possible use of Fedwire to effect the transfer, and of the rules governing Fedwire. This warranty is important to achieve "end-to-end" coverage of a funds transfer under the Article 4A provisions, as incorporated in subpart B, and also to protect the Federal Reserve Banks from potential liability for consequential damages to parties in states that have not adopted the Article 4A limitation on consequential damages (*see* section 4A–305). The Board anticipates that other funds-transfer systems and banks providing funds-transfer services will either require that their senders provide such a notice, or require that their senders warrant that such notice has been given (*see also* the analysis of § 210.25). Consequently, the Board does not believe that this provision will have an adverse competitive effect.

Finally, Article 4A provides that the sender must notify a receiving bank of an unauthorized, erroneous, or erroneously executed payment order within a reasonable time not exceeding 90 days from receipt of the notice of the order (*see* section 4A–304). Regulation J currently provides that a sender is deemed to approve the accuracy of an advice of debit unless it objects in writing within 10 calendar days of receipt of the advice (*see* current § 210.34(b)). Proposed § 210.28(d) specifies 10 funds-transfer business days as the reasonable time within which senders must act, for the purposes of receiving interest or compensation for losses as provided in Article 4A. Similarly, under Article 4A, banks may establish by agreement what constitutes a reasonable time to provide this notice (*see* section 4A–501); therefore, the Board does not believe that this requirement results in any adverse competitive effect.

Section 210.29—Agreement of Receiving Bank

This section requires an off-line bank to notify its Federal Reserve Bank if it maintains an account for another bank, so that the Federal Reserve Bank will provide telephone notice for all Fedwire funds transfers received by that bank, including settlement transfers. If the off-line bank does not provide this notice to its Federal Reserve Bank, it warrants that it does not act as the beneficiary's bank with respect to Fedwire payment orders for a beneficiary that is a bank.

The Board believes that this warranty would have no adverse competitive effect. For example, the Board believes that this action would have no adverse competitive effect on the operations of CHIPS, because this system does not serve low-volume institutions and all CHIPS participants are on-line to that system. Further, this warranty is a reasonable provision designed to enable Federal Reserve Banks to fulfill their obligation under Section 4A–302 to execute payment orders at a time and by means reasonably necessary to allow payment to the beneficiary on the payment date or as soon thereafter as is feasible. The ability to require this warranty is not derived from unique bargaining position on the part of the Federal Reserve Banks; correspondent banks that provide funds-transfer services to off-line respondent banks could impose a similar warranty on their respondent receivers.

Under § 210.29, a receiving bank also warrants that all subsequent parties to the funds transfer were notified that Fedwire might have been used to make the transfer and of the law governing Fedwire. *See* the analysis of the warranty of the sender of a Fedwire

payment order, discussed with respect to § 210.28.

Section 210.30—Payment Orders

This section sets forth the terms under which a Federal Reserve Bank will accept payment orders from the sender. The section provides: that a sender must have authorization to send Fedwire payment orders to a Federal Reserve Bank; that a Federal Reserve Bank may reject any payment order; that a Federal Reserve Bank may execute a payment order through another Federal Reserve Bank; that a sender may not instruct a Federal Reserve Bank to select an intermediary bank other than a Federal Reserve Bank unless that bank is designated in the sender's payment order; and that a sender generally may not send a value-dated payment order through Fedwire. The Board believes that these provisions are reasonable and that private sector receiving banks may arrange similar terms with their senders; therefore, these provisions do not rely on unique bargaining power of Federal Reserve Banks. Consequently, the Board believes that these provisions do not have an adverse competitive effect.

Section 210.31—Payment by a Federal Reserve Bank to a Receiving Bank or Beneficiary

The primary distinguishing characteristic of Fedwire is that payment orders are final and irrevocable to the receiver when made. This section, regarding when a Federal Reserve Bank makes payment to a receiving bank or beneficiary, parallels current § 210.36(a) by providing that payments to receiving banks and beneficiaries are final at the earlier of the time when the amount of the payment order is credited to the receiving bank's or beneficiary's account, or when the payment order is sent to the receiving bank or when notice of the credit is sent to the beneficiary. Fedwire's payment finality could be viewed as a sufficiently significant benefit to participants as to have an adverse effect on competing private-sector funds-transfer systems. However, the Board believes that Fedwire payment finality is vital to the continued integrity and efficiency of the payments system. Moreover, CHIPS will soon be instituting a loss-sharing arrangement to ensure the finality of its settlement, thus increasing the certainty of final payment over that system. Correspondent banks providing funds-transfer services can provide payments finality similar to that specified in proposed § 210.32 to their respondent banks and beneficiaries (*see* section 4A-405). For these reasons the Board believes that the benefits of Fedwire payment finality—the certainty of payment and the elimination of systemic risk—outweigh any possible adverse competitive effect.

Section 210.32—Federal Reserve Bank Liability; Payment of Interest

Article 4A provides that a bank is not liable for consequential damages, unless it agrees to be subject to such damages by express written agreement. This section makes clear that Federal Reserve Banks do not agree to be subject to consequential damages, and is consistent with the presumption in Article 4A. The Board believes that many private-sector providers of funds-transfer services will also not agree to be subject to consequential damages; consequently, the Board believes that this provision does not have an adverse competitive effect.

Article 4A provides that the amount of interest payable under its provisions may be determined by agreement or funds transfer system rule. Subpart B provides that a Federal Reserve Bank may provide interest compensation through either an as of adjustment or explicit interest payment. The Board believes that providing interest compensation in the form of as of adjustments would not have an adverse competitive effect because the Federal Reserve includes the imputed cost of as of adjustments related to Fedwire transfers (computed at the federal funds rate) in its total cost of providing the Fedwire funds-transfer service. Moreover, the Board believes that banks could agree with their customers under Article 4A to similar arrangements using compensating balances, which would be analogous to an as of adjustment provided by a Federal Reserve Bank. In cases where a Federal Reserve Bank provides compensation in the form of explicit interest, interest would be calculated in accordance with the procedures specified in Article 4A (*see* section 4A-506(b)).

Initial Regulatory Flexibility Analysis

The Regulatory Flexibility Act (5 U.S.C. 601-612) requires an agency to publish an initial regulatory flexibility analysis with any notice of proposed rulemaking. An initial regulatory flexibility analysis must describe the reasons why action by the agency is being considered and state the objectives of, and the legal basis for the proposed rule (5 U.S.C. 603(b)(1) and (2)). This information is contained elsewhere in this notice of proposed rulemaking. The proposed rules require no additional reporting or recordkeeping nor are there relevant federal rules that duplicate, overlap, or conflict with the proposed rule.

The initial regulatory flexibility analysis must also describe and, where feasible, estimate the number of small entities to which the proposed rule will apply. Subpart B of Regulation J will be applicable to all direct Fedwire participants and all parties receiving notice that Fedwire may be used to complete at least part of the funds transfer and that subpart B is the governing law for Fedwire. Thus, subpart B potentially affects all depository institutions, and any business or individual that may send or receive a funds transfer through Fedwire.

The Board does not believe that there are any significant alternatives to the proposed revision of subpart B of Regulation J that would (1) provide comprehensive rules for funds transfers involving Federal Reserve Banks, (2) make subpart B consistent with state laws applicable to funds transfers as more states adopt Article 4A, and (3) help ensure that, subject to their central banking responsibilities, Federal Reserve Banks compete on an equitable basis with private-sector providers of funds-transfer services and concurrently minimize any significant economic impact of the proposed rule on small entities.

The Board has not proposed an exemption from coverage for small entities that send or receive payment orders through Fedwire. The purpose of the proposed rule is to provide comprehensive rules for funds transfers that go through Fedwire. This purpose would not be achieved if the rules did not apply to small entities that send or receive funds transfers through Fedwire. Moreover, subpart B could not provide end-to-end coverage for a funds transfer if small institutions were excepted from its coverage. For example, end-to-end coverage permits the originator and the beneficiary of the funds transfer to determine when the originator's obligation to the beneficiary is discharged. Further, the rules confer important rights upon parties to a Fedwire funds transfer, such as the right to receive interest in certain circumstances, and provide a shield from liability for consequential damages if a mishap occurs. These rights would benefit small institutions as well as larger institutions. The Board does not believe that complying with the proposed subpart B rules will impose a significant cost on depository institutions, including small institutions.

List of Subjects in 12 CFR Part 210

Banks, banking; Federal Reserve System.

For the reasons set out in the preamble, the Board proposes to amend 12 CFR part 210 as follows:

PART 210—REGULATION J (COLLECTION OF CHECKS AND OTHER ITEMS BY FEDERAL RESERVE BANKS AND FUNDS TRANSFERS THROUGH FEDWIRE)

1. The authority citation for part 210 is revised to read as follows:

Authority: Federal Reserve Act, sec. 13 (12 U.S.C. 342), sec. 11(i) and (j) (12 U.S.C. 248(i) and (j)), sec. 16 (12 U.S.C. 248(o) and 360), and sec. 19(f) (12 U.S.C. 464); and the Expedited Funds Availability Act (12 U.S.C. 4001 et seq.)

2. Subpart B, consisting of §§ 210.25 through 210.32, and Appendix A, is revised to read as follows:

Subpart B—Funds Transfers Through Fedwire

Sec.
210.25 Authority, purpose, and scope.
210.26 Definitions.
210.27 Reliance on identifying number.
210.28 Agreement of sender.
210.29 Agreement of receiving bank.
210.30 Payment orders.
210.31 Payment by a Federal Reserve Bank to a receiving bank or beneficiary.
210.32 Federal Reserve Bank liability; payment of interest.

Appendix A to Subpart B—Commentary

Subpart B—Funds Transfers through Fedwire

§ 210.25 Authority, purpose, and scope.

(a) *Authority and purpose.* This subpart provides rules to govern funds transfers through Fedwire, and has been issued pursuant to the Federal Reserve Act—section 13 (12 U.S.C. 342), paragraph (f) of section 19 (12 U.S.C. 464), paragraph 14 of section 16 (12 U.S.C. 248(o)), and paragraphs (i) and (j) of section 12 (22 U.S.C. 248(i) and (j))—and other laws and has the force and effect of federal law. This subpart is not a funds-transfer system rule as defined in section 4A-501(b) of the Uniform Commercial Code.

(b) *Scope.* (1) This subpart incorporates the provisions of Article 4A unless they are inconsistent with the express provisions of this subpart.

(2) This subpart governs the rights and obligations of:

(i) Federal Reserve Banks sending or receiving payment orders;

(ii) Senders that send payment orders directly to a Federal Reserve Bank;

(iii) Receiving banks that receive payment orders directly from a Federal Reserve Bank;

(iv) Beneficiaries that receive payment for a payment order sent to a Federal Reserve Bank by means of a credit to an account maintained or used at a Federal Reserve Bank; and

(v) Other parties to a funds transfer any part of which is carried out through Fedwire to the same extent as if this subpart were considered a funds transfer system rule under Article 4A.

(c) *Operating circulars.* Each Federal Reserve Bank shall issue an Operating Circular consistent with this subpart that governs the details of its funds-transfer operations and other matters it deems appropriate. Among other things, the Operating Circular may: set cut-off hours and funds-transfer business days; address available security procedures; specify format and media requirements for payment orders; identify messages that are not payment orders; and impose charges for funds-transfer services.

(d) *Government senders, receiving banks, and beneficiaries.* Except as otherwise expressly provided by the statutes of the United States, senders, receiving banks, and beneficiaries that maintain or use an account with a Federal Reserve Bank include:

(1) A department, agency, instrumentality, independent establishment, or office of the United States, or a wholly-owned or controlled Government corporation;

(2) An international organization;

(3) A foreign central bank; and

(4) A department, agency, instrumentality, independent establishment, or office of a foreign government, or a wholly-owned or controlled corporation of a foreign government.

§ 210.26 Definitions.

As used in this subpart, the following definitions apply:

(a) *Article 4A* means Article 4A of the Uniform Commercial Code.

(b) *As of adjustment* means a debit or credit, for reserve or clearing balance maintenance purposes only, applied to the reserve or clearing balance of a bank that either sends a payment order to a Federal Reserve Bank, or that receives a payment order from a Federal Reserve Bank, in lieu of an interest charge or payment.

(c) *Automated clearing house transfer* means any transfer designated as an automated clearing house transfer in a Federal Reserve Bank Operating Circular or in the rules of an automated clearing house association.

(d) *Beneficiary's bank* has the same meaning as in Article 4A, except that:

(1) A Federal Reserve Bank need not be identified in the payment order in order to be the beneficiary's bank; and

(2) The term includes a Federal Reserve Bank when that Federal Reserve Bank is the beneficiary of a payment order.

(e) *Fedwire* is the funds-transfer system owned and operated by the Federal Reserve Banks that is used primarily for the transmission and settlement of payment orders governed by this subpart. Fedwire does not include the system for making automated clearing house transfers.

(f) *Interdistrict transfer* means a funds transfer involving entries to accounts maintained at two Federal Reserve Banks.

(g) *Intradistrict transfer* means a funds transfer involving entries to accounts maintained at one Federal Reserve Bank.

(h) *Off-line bank* means a bank that transmits payment orders to and receives payment orders from a Federal Reserve Bank by telephone or other means other than electronic data transmission.

(i) *Payment order* has the same meaning as in Article 4A, except that the term does not include automated clearing house transfers or any communication designated in a Federal Reserve Bank Operating Circular issued under this subpart as not being a payment order.

(j) *Sender's account, receiving bank's account,* and *beneficiary's account* mean the reserve, clearing, or other funds deposit account at a Federal Reserve Bank maintained or used by the sender, receiving bank, or beneficiary, respectively.

(k) *Sender's Federal Reserve Bank* and "receiving bank's Federal Reserve Bank" mean the Federal Reserve Bank at which the sender or receiving bank, respectively, maintains or uses an account.

(l) *Uniform Commercial Code* or *UCC* means the Uniform Commercial Code as approved by the National Conference of Commissioners on Uniform State Laws and the American Law Institute from time to time.

§ 220.27 Reliance on identifying number.

(a) *Reliance by a Federal Reserve Bank on number to identify an intermediary bank or beneficiary's bank.* A Federal Reserve Bank may rely on the number in a payment order that identifies the intermediary bank or beneficiary's bank, even if it identifies a bank different from the bank identified by name in the payment order, if the Federal Reserve Bank does not know of such an inconsistency in identification. A Federal Reserve Bank has no duty to

detect any such inconsistency in identification.

(b) *Reliance by a Federal Reserve Bank on number to identify beneficiary.* A Federal Reserve Bank, acting as a beneficiary's bank, may rely on the number in a payment order that identifies the beneficiary, even if it identifies a person different from the person identified by name in the payment order, if the Federal Reserve Bank does not know of such an inconsistency in identification. A Federal Reserve Bank has no duty to detect any such inconsistency in identification.

§ 210.28 Agreement of sender.

(a) *Payment of sender's obligation to a Federal Reserve Bank.* A sender (other than a Federal Reserve Bank), by maintaining or using an account with a Federal Reserve Bank, authorizes the sender's Federal Reserve Bank to obtain payment for the sender's payment orders by debiting the amount of the payment order from the sender's account.

(b) *Overdrafts.* (1) A sender does not have the right to an overdraft in its account. In the event an overdraft is created, the overdraft shall be due and payable immediately without the need for a demand by the Federal Reserve Bank, at the earliest of the following times:

(i) At the end of the funds-transfer business day;

(ii) At the time the Federal Reserve Bank, in its sole discretion, deems itself insecure and gives notice thereof to the sender; or

(iii) At the time the sender suspends payments or is closed.

(2) The sender shall have in its account, at the time the overdraft is due and payable, a balance of actually and finally collected funds sufficient to cover the aggregate amount of all its obligations to the Federal Reserve Bank, whether the obligations result from the execution of a payment order or otherwise.

(3) A Federal Reserve Bank may take any action authorized by law to recover the amount of an overdraft that is due and payable, including, but not limited to, the exercise of rights of set off, the realization on any available collateral, and any other rights it may have as a creditor under applicable law.

(4) To secure any overdraft, as well as any other obligation due or to become due to its Federal Reserve Bank, each sender, by sending a payment order to a Federal Reserve Bank that is accepted by the Federal Reserve Bank, grants to the Federal Reserve Bank a security interest in all of the sender's assets in the possession of, or held for the account of, the Federal Reserve Bank. The security interest attaches when an overdraft becomes due and payable.

(c) *Notice by sender of use of Fedwire.* A sender sending a payment order directly to a Federal Reserve Bank warrants to the Federal Reserve Bank that all prior senders of payment orders comprising that funds transfer have been notified that Fedwire might be used in that funds transfer and that the rights and obligations of the parties to the funds transfer are governed by subpart B.

(d) *Review of payment orders.* A sender, by sending a payment order to a Federal Reserve Bank, agrees that for the purposes of sections 4A-204(a), 4A-205(b), and 4A-304 of the Uniform Commercial Code, a reasonable time to notify a Federal Reserve Bank of the relevant facts concerning an unauthorized, erroneous, or erroneously executed payment order is within ten funds-transfer business days after the sender receives notice that the payment order was accepted or executed, or that the sender's account was debited with respect to the payment order.

§ 210.29 Agreement of receiving bank.

(a) *Payment.* A receiving bank (other than a Federal Reserve Bank) that receives a payment order from its Federal Reserve Bank authorizes that Federal Reserve Bank to pay for the payment order by crediting the amount of the payment order to the receiving bank's account.

(b) *Off-line banks.* An off-line bank that does not expressly notify its Federal Reserve Bank in writing that it maintains an account for another bank warrants to that Federal Reserve Bank that the offline bank does not act as a beneficiary's bank with respect to payment orders received through Fedwire for a beneficiary that is a bank.

(c) *Notice by receiving bank of use of Fedwire.* A receiving bank receiving a payment order directly from a Federal Reserve Bank warrants to the Federal Reserve Bank that all subsequent receiving banks of payment orders comprising that funds transfer and the beneficiary of the funds transfer have been notified that Fedwire might be used in the funds transfer and that the rights and obligations of the parties to the funds transfer are governed by subpart B.

§ 210.30 Payment orders.

(a) *Rejection.* A sender shall not send a payment order to a Federal Reserve Bank unless authorized to do so by the Federal Reserve Bank. A Federal Reserve Bank may reject, or impose conditions that must be satisfied before it will accept, a payment order for any reason.

(b) *Selection of an intermediary bank.* For an interdistrict transfer, a Federal Reserve Bank is authorized and directed to execute a payment order through another Federal Reserve Bank. A sender shall not send a payment order to a Federal Reserve Bank that requires the Federal Reserve Bank to issue a payment order to an intermediary bank (other than a Federal Reserve Bank) unless that intermediary bank is designated in the sender's payment order. A sender shall not send to a Federal Reserve Bank a payment order instructing use by a Federal Reserve Bank of a funds-transfer system or means of transmission other than Fedwire, unless the Federal Reserve Bank agrees with the sender in writing to follow such instructions.

(c) *Same-day execution.* A sender shall not issue a payment order that instructs a Federal Reserve Bank to execute the payment order on a funds-transfer business day that is later than the funds-transfer business day on which the order is received by the Federal Reserve Bank, unless the Federal Reserve Bank agrees with the sender in writing to follow such instructions.

§ 210.31 Payment by a Federal Reserve Bank to a receiving bank or beneficiary.

(a) *Payment to a receiving bank.* Payment of a Federal Reserve Bank's obligation to pay a receiving bank (other than a Federal Reserve Bank) occurs at the earlier of the time when the amount of the payment order is credited to the receiving bank's account or when the payment order is sent to the receiving bank.

(b) *Payment to a beneficiary.* Payment by a Federal Reserve Bank to a beneficiary of a payment order, where the Federal Reserve Bank is the beneficiary's bank, occurs at the earlier of the time when the amount of the payment order is credited to the beneficiary's account or when notice of the credit is sent to the beneficiary.

§ 210.32 Federal Reserve Bank liability; payment of interest.

(a) *Damages.* A Federal Reserve Bank shall not agree with a sender, receiving bank, or other Federal Reserve Bank to be held liable for consequential damages or any damages other than those payable under Article 4A.

(b) *Payment of interest.* (1) A Federal Reserve Bank, in its discretion, may provide an as of adjustment to its sender, its receiving bank or its

beneficiary as a means of paying compensation in the form of interest, as provided in the Federal Reserve Bank's Operating Circular. The amount of the as of adjustment shall equal the amount of the error multiplied by the number of days that the error remained uncorrected.

(2) If the sender or receiving bank that is the recipient of an as of adjustment in the form of a credit is not the party entitled to payment under Article 4A, the sender or receiving bank shall pass through the benefit of the as of adjustment by making a payment of interest, as of the day the as of adjustment is effected, to the appropriate originator or beneficiary. The interest shall be calculated in accordance with section 4A-506(b) of the Uniform Commercial Code. The originator or beneficiary may agree to accept compensation in a form other than a direct payment of interest, provided that such an alternative form of interest is not less than the value of the interest payment that otherwise would be made.

(3) The Federal Reserve Bank shall pay interest, in accordance with section 4A-506 of the Uniform Commercial Code, to parties entitled to such interest, if the sender, receiving bank, or beneficiary would be unable to make use of an as of adjustment because of a low or zero reserve and/or clearing balance requirement.

(c) *Nonwaiver of right of recovery.* Nothing in this subpart or any Operating Circular issued hereunder shall constitute, or be construed as constituting, a waiver by a Federal Reserve Bank of a cause of action for recovery under any applicable law of mistake and restitution.

Appendix A to Subpart B—Commentary

The Commentary provides background material to explain the intent of the Board of Governors of the Federal Reserve System ("Board") in adopting a particular provision in the subpart and to help readers interpret that provision. In some comments, examples are offered. The Commentary constitutes an official Board interpretation of subpart B. Commentary is not provided for every provision of subpart B, as some provisions are self-explanatory.

Section 210.25—Authority, Purpose and Scope

(a) *Authority and purpose.* Section 210.25(a) states that the purpose of Subpart B is to provide rules to govern funds transfers through Fedwire and recites the Board's rulemaking authority for this subpart. Subpart B is federal law and is not a "funds-transfer system rule," as defined in section 4A-501(b) of Article 4A, Funds Transfers, of the Uniform Commercial Code. Certain provisions of Article 4A may not be varied by a funds-transfer system rule, but under section 4A-107 regulations of the Board and Operating Circulars of the Federal Reserve Banks supersede inconsistent provisions of Article 4A to the extent of the inconsistency. In addition, regulations of the Board may preempt inconsistent provisions of state law. Accordingly, subpart B of Regulation J supersedes or preempts inconsistent provisions of state laws.

(b) *Scope.* (1) Subpart B incorporates consistent provisions of Article 4A of the Uniform Commercial Code. Thus, the provisions set forth expressly in subpart B supersede or preempt any inconsistent provisions of Article 4A as enacted in any state. Subpart B applies to any party to a Fedwire funds transfer that is in privity with a Federal Reserve Bank. These parties include a sender (bank or nonbank) that sends a payment order directly to a Federal Reserve Bank, a receiving bank that receives a payment order directly from a Federal Reserve Bank, and a beneficiary that receives credit to an account that it uses or maintains at a Federal Reserve Bank for a payment order sent to a Federal Reserve Bank. Other parties to a funds transfer are covered by this subpart to the same extent that this subpart would apply to them if this subpart were a "funds-transfer system rule" under Article 4A that selected subpart B as the governing law.

(2) The scope of the applicability of a funds-transfer system rule under Article 4A is specified in section 4A-501(b), and the scope of the choice of law provision is specified in section 4A-507(c). Under section 4A-507(c), a choice of law provision is binding on the participants in a funds-transfer system and certain other parties having notice that the funds transfer system might be used for the funds transfer and of the choice of law provision. Consequently, if the notice requirements of section 4A-507(c) are met, the rights and obligations of all parties to a funds transfer any part of which is carried out by means of Fedwire will be governed by subpart B.

(3) The Board believes that it is desirable to have a coherent body of law apply to all parties to a funds transfer, including originators, other senders, receiving banks, and beneficiaries. In addition, the application of subpart B to parties not in privity with a Federal Reserve Bank may affect a Federal Reserve Bank's potential liability for consequential damages to parties in states that have not adopted the section 4A-305 limitation on consequential damages (*see* section 4A-305, which provides that consequential damages are only recoverable pursuant to an express agreement). Sections 210.28(c) and 210.29(c) encourage banks sending or receiving funds transfers over Fedwire to ensure that all parties to the funds transfer are notified of the potential use of Fedwire by requiring senders and receiving banks to warrant to the Federal Reserve Bank that the notices contemplated by section 4A-507(c) have been provided. Under this warranty the notices need not actually be provided; however, if they are not, the warrantor would be liable for losses incurred by a Federal Reserve Bank that would have been avoided if the notice was provided.

(4) If the notices to senders, receiving banks, and beneficiaries contemplated by section 4A-507(c) are provided, subpart B may apply to payment orders between banks or other parties remote from the Federal Reserve Bank, including participants in other funds-transfer systems. For example, a funds transfer may be sent from an originator's bank over the Clearing House Interbank Payments System (CHIPS) to a receiving bank which, in turn, sends a payment order through Fedwire to execute the funds transfer. Similarly, a Federal Reserve Bank may execute a payment order through Fedwire to a receiving bank that sends it through CHIPS to a beneficiary's bank. In the first example, if the originator's bank has notice that Fedwire may be used to effect part of the funds transfer, the sending of the payment order to the receiving bank will be governed by subpart B. In the second example, if the beneficiary's bank has notice that Fedwire may be used to effect part of the funds transfer, the sending of the payment order to the beneficiary's bank will be governed by subpart B. In both cases, any funds-transfer system rules adopted by CHIPS would also apply to, at a minimum, the CHIPS portion of these funds transfers. Because subpart B is federal law, to the extent of any inconsistency, subpart B will take precedence over any funds-transfer system rule applicable to the remote sender or receiving bank or to a Federal Reserve Bank. However, subpart B would not apply to a funds transfer sent through a funds-transfer system such as CHIPS where no Federal Reserve Bank handles the funds transfer, even though settlement for the funds transfer is made by means of a separate net settlement or funds transfer through Fedwire.

(c) *Operating circulars.* The Federal Reserve Banks issue Operating Circulars consistent with this regulation that contain additional provisions applicable to payment orders sent through Fedwire. Under section 4A-107, these Operating Circulars supersede inconsistent provisions of Article 4A. These Operating Circulars are not funds-transfer system rules, but, by their terms, they are binding on all parties covered by this subpart.

(d) *Government senders, receiving banks, and beneficiaries.* This section clarifies that unless a statute of the United States provides otherwise, subpart B applies to governmental entities, domestic or foreign, including foreign central banks, that act as senders, receiving banks, or beneficiaries of funds transfers through Fedwire.

Section 210.26—Definitions

Article 4A defines many terms (e.g., "beneficiary," "intermediary bank," "receiving bank," "security procedure") used in this subpart. These terms are defined or listed in sections 4A-103 through 4A-105. These terms, such as the term "bank" (defined in section 4A-105(2)), may differ from comparable terms in subpart A. As subpart B incorporates consistent provisions of Article 4A, it incorporates these definitions unless these terms are expressly defined otherwise in subpart B. This subpart modifies the definitions of two Article 4A terms,

"beneficiary's bank" and "payment order." This subpart also defines terms not defined in Article 4A.

(a) *Article 4A.* "Article 4A" is defined to mean the official version of that article of the Uniform Commercial Code and does not refer to the law of any particular state. This official version of Article 4A is incorporated into this subpart and made federal law for transactions covered by this subpart.

(b) *As of adjustments.* As of adjustments are memorandum items that affect a bank's reserve or clearing balance for the purpose of meeting the required balance, but do not represent funds that can be used for other purposes. As discussed in the Commentary to § 210.32(b), the Federal Reserve Banks generally provide as of adjustments as a means of effecting interest payments or charges.

(d) *Beneficiary's bank.* The definition of "beneficiary's bank" in subpart B differs from the section 4A-103(a)(3) definition. The subpart B definition clarifies that a Federal Reserve Bank that receives a payment order as beneficiary is also the beneficiary's bank with respect to that payment order. In addition, where a Federal Reserve Bank functions as the beneficiary's bank, it need not be identified in the payment order as the beneficiary's bank.

(e) *Fedwire.* Fedwire refers to the funds-transfer system owned and operated by the Federal Reserve Banks that is governed by this Subpart. The term does not refer to any particular computer, telecommunications facility, or funds transfer, but to the system as a whole, which may include transfers by telephone or by written instrument in particular circumstances. Fedwire does not include the system used for automated clearing house transfers.

(h) *Off-line bank.* Most Fedwire payment orders are transmitted electronically from a sender to a Federal Reserve Bank or from a Federal Reserve Bank to a receiving bank. Banks transmitting payment orders to Federal Reserve Banks electronically are often referred to as on-line banks. Some Fedwire participants, however, transmit payment orders to a Federal Reserve Bank or receive payment orders from a Federal Reserve Bank orally by telephone, or, in unusual circumstances, in writing. A bank that does not use either a terminal or a computer that links it electronically to a terminal or computer at its Federal Reserve Bank to send payment orders through Fedwire is an off-line bank.

(j) *Payment order.* (1) The definition of "payment order" in subpart B differs from the section 4A-103(a)(1) definition. The subpart B definition clarifies that certain messages that are transmitted through Fedwire are not payment orders. Federal Reserve Banks and banks participating in Fedwire send various types of messages, relating to payment orders or to other matters, through Fedwire that are not intended to be payment orders. Under the subpart B definition, these messages, and messages involved with automated clearing house transfers, are not "payment orders" and therefore are not governed by this subpart. The Operating Circulars of the Federal Reserve Banks specify those messages, other than automated clearing house transfers, that may be transmitted through Fedwire but that are not payment orders.

(2) This subpart and Article 4A govern a payment order even though the originator's or beneficiary's account may be a consumer account established primarily for personal, family, or household purposes. Under section 4A-108, Article 4A does not apply to a funds transfer any part of which is governed by the Electronic Fund Transfer Act (15 U.S.C. 1693 *et seq.*). That Act, and Regulation E (12 CFR part 205) implementing it, do not apply to funds transfers through Fedwire (*see* 15 U.S.C. 1693(a)(6)(A) and 12 CFR 205.3(b)). Thus, this subpart applies to all funds transfers through Fedwire even though some such transfers involve originators or beneficiaries that are consumers.

Section 210.27—Reliance on Identifying Number.

(a) *Reliance by a Federal Reserve Bank on number to identify intermediary bank or beneficiary's bank.* Section 4A-208 provides that a receiving bank, such as a Federal Reserve Bank, may rely on the routing number of an intermediary bank or the beneficiary's bank specified in a payment order as identifying the appropriate intermediary bank or beneficiary's bank, even if the payment order identifies another bank by name, provided that the receiving bank does not know of the inconsistency. Under section 4A-208(b)(2), if the sender of the payment order is not a bank, a receiving bank may rely on the number only if the sender had notice before the receiving bank accepted the sender's order that the receiving bank might rely on the number. This section provides this notice to entities that are not banks, such as the Department of the Treasury, that send payment orders directly to a Federal Reserve Bank.

(b) *Reliance by a Federal Reserve Bank on number to identify beneficiary.* Section 4A-207 provides that a beneficiary's bank, such as a Federal Reserve Bank, may rely on the number identifying a beneficiary, such as the beneficiary's account number, specified in a payment order as identifying the appropriate beneficiary, even if the payment order identifies another beneficiary by name, provided that the beneficiary's bank does not know of the inconsistency. Under section 4A-207(c)(2), if the originator is not a bank, an originator's bank is not entitled to payment for a payment order if the originator did not have notice that the beneficiary's bank would rely on the identifying number and the person paid on the basis of the identifying payment was not entitled to receive payment. This section of subpart B provides this notice to entities that are not banks, such as the Department of the Treasury, that are originators of payment orders sent directly by the originators to a Federal Reserve Bank, where that Federal Reserve Bank or another Federal Reserve Bank is the beneficiary's bank (*see also* section 4A-402(b), providing that a sender must pay a beneficiary's bank for a payment order accepted by the beneficiary's bank).

Section 210.28—Agreement of Sender

(a) *Payment of sender's obligation to a Federal Reserve Bank.* When a sender issues a payment order to a Federal Reserve Bank and the Federal Reserve Bank issues a conforming order implementing the sender's payment order, under section 4A-403, the sender is indebted to the Federal Reserve Bank for the amount of the payment order. A sender, other than a Federal Reserve Bank, that maintains or uses an account at a Federal Reserve Bank authorizes the Federal Reserve Bank to debit that account so that the Federal Reserve Bank can obtain payment for the payment order.

(b) *Overdrafts.* (1) In some cases, debits to a sender's account will create an overdraft in the sender's account. A sender does not have a right to such an overdraft. If an overdraft arises, it becomes immediately due and payable at the earliest of: the end of the funds-transfer business day of the Federal Reserve Bank; the time the Federal Reserve Bank, in its sole discretion, deems itself insecure and gives notice to the sender; or the time that the sender suspends payments or is closed by governmental action, such as the appointment of a receiver. In some cases, a Federal Reserve Bank extends its Fedwire operations beyond its cut-off hour for that funds-transfer business day. For the purposes of this section, unless otherwise specified by the Federal Reserve Bank making such an extension, an overdraft becomes due and payable at the end of the extended operating hours. An overdraft becomes due and payable prior to a Federal Reserve Bank's cut-off hour if the Federal Reserve Bank deems itself insecure and gives notice to the sender. Notice that the Federal Reserve Bank deems itself insecure may be given in accordance with the provisions on notice in section 1-201(27) of the UCC, in accordance with any other applicable law or agreement, or by any other reasonable means. An overdraft also becomes due and payable at the time that a bank is closed or suspends payments. For example, an overdraft becomes due and payable if a receiver is appointed for the bank or the bank is prevented from making payments by governmental order. The Federal Reserve Bank need not make demand on the sender for the overdraft to become due and payable. Once an overdraft is due and payable, a Federal Reserve Bank may exercise its right of set off, liquidate collateral, or take other similar action to satisfy the overdrafting bank's obligation owed to the Federal Reserve Bank.

(2) A sender must cover any overdraft and any other obligation of the sender to the Federal Reserve Bank by the time the overdraft becomes due and payable. By sending a payment order to a Federal Reserve Bank, the sender grants a security interest to the Federal Reserve Bank in any assets of the sender held by, or for the account of, the Federal Reserve Bank in order to secure all obligations due or to become due to the Federal Reserve Bank. The security interest attaches when the overdraft becomes due and payable. The security interest does not apply to assets held by the sender as

custodian or trustee for the sender's customers or third parties.

(c) *Notice by sender of use of Fedwire.* If an originator or other sender of a funds transfer sent through Fedwire does not send the payment order directly to a Federal Reserve Bank and does not have notice that Fedwire may be used for a portion of the funds transfer, under § 210.25(b) this subpart would not apply to that originator or sender. This section requires a sender sending a payment order directly to a Federal Reserve Bank to warrant to the Federal Reserve Bank that its prior senders have been notified that Fedwire may be used for the funds transfer (*see* Commentary to § 210.25(b)).

(d) *Review of payment orders.* (1) Under section 4A-204, a receiving bank is required to refund the principal amount of an unauthorized payment order that the sender was not obliged to pay, together with interest from the date that the receiving bank receives payment. The sender may lose its right to interest if the sender fails to exercise ordinary care to determine that the order was not authorized and notify the receiving bank within a reasonable period of time after the sender receives a notice that the payment order was accepted or that the sender's account had been debited. Similarly, under Section 4A-304, if a sender of a payment order that was erroneously executed does not notify the bank receiving the payment order within a reasonable time, the bank is not liable to the sender for interest on any amount refundable to the sender. Finally, under section 4A-205, a receiving bank is not liable for losses that could have been avoided if the sender notified the bank within a reasonable period of time after receiving notice from the bank that a payment order that was erroneous was accepted or the sender's account was debited with respect to the payment order. Section 210.28(d) establishes ten funds-transfer business days as the reasonable period of time for the purposes of these provisions of Article 4A.

(2) Section 4A-505 provides that a customer must object to a debit to its account by a receiving bank within one year after the customer is notified of the debit. Subpart B does not vary this one-year period.

Section 210.29—Agreement of Receiving Bank.

(b) *Off-line banks.* (1) Generally, an on-line bank receiving payment orders or advices of credit for payment orders from a Federal Reserve Bank receives the payment orders or advices electronically a short time after the corresponding payment orders are received by the on-line bank's Federal Reserve Bank. An off-line bank receiving payment orders or advices of credit from a Federal Reserve Bank does not have an electronic connection with the Federal Reserve Bank; therefore, payment orders or advices are transmitted either by telephone on the day the payment order is received by the receiving bank's Federal Reserve Bank, or sent by courier or mail along with the off-line bank's daily account statement, on the day following to the day the payment order is received by the off-line bank's Federal Reserve Bank.

(2) Under section 4A-302(a)(2), a Federal Reserve Bank must transmit payment orders at a time and by means reasonably necessary to allow payment to the beneficiary on the payment date, or as soon thereafter as is feasible. Therefore, where an off-line receiving bank is an intermediary bank or beneficiary's bank in a payment order, its Federal Reserve Bank attempts to transmit the payment order to the off-line bank by telephone on the day the payment order is received by the Federal Reserve Bank. A Federal Reserve Bank can generally identify these payment orders from the type code designated in the payment order.

(3) Under Section 4A-404(b), if a payment order instructs payment to the account of the beneficiary, the beneficiary's bank must notify the beneficiary of the receipt of a payment order before midnight of the next funds-transfer business day following the payment date. Where an off-line bank is the beneficiary of a payment order, telephone notice by a Federal Reserve Bank to the off-line bank of the receipt of the order is not required by Article 4A because the Federal Reserve Bank sends notice to the off-line bank by courier or mail, along with its daily account statement, on the day after the payment order is received by its Federal Reserve Bank. Payment orders for which an off-line bank is the beneficiary of the order are generally designated as settlement transactions.

(4) If an off-line receiving bank maintains an account for another bank, the off-line bank may receive payment orders designated as settlement transactions for credit to the respondent bank as beneficiary, beneficiary's bank or intermediary bank. A Federal Reserve Bank cannot readily distinguish these payment orders from settlement transactions for which the off-line bank is the beneficiary of the order. If an off-line bank notifies its Federal Reserve Bank that it maintains an account for another bank, the Federal Reserve Bank will attempt to telephone the off-line bank with respect to all settlement transactions received by such bank, whether the off-line bank is the beneficiary, the beneficiary's bank, or an intermediary bank in the payment order. Under this section, an off-line bank that does not expressly notify its Federal Reserve Bank in writing that it maintains an account for another bank warrants to that Federal Reserve Bank that it does not hold any such accounts.

(c) *Notice by receiving bank of use of Fedwire.* Under § 210.25(b), this subpart would not apply to a beneficiary or receiving bank that receives a funds transfer sent through Fedwire but that does not receive it directly from a Federal Reserve Bank, if that beneficiary or receiving bank does not have notice that Fedwire may be used for a portion of the funds transfer. This subsection requires a receiving bank receiving a payment order directly from a Federal Reserve Bank to warrant to the Federal Reserve Bank that all subsequent banks receiving payment orders that are a part of the same funds transfer and the beneficiary of the funds transfer have been notified that Fedwire may be used for the funds transfers that they receive (*see* Commentary to Section 210.25(b)).

Section 210.30—Payment Orders.

(a) *Rejection.* (1) A sender must make arrangements with its Federal Reserve Bank before it can send payment orders to the Federal Reserve Bank. Federal Reserve Banks reserve the right to reject or impose conditions on the acceptance of payment orders for any reason. For example, a Federal Reserve Bank might reject or impose conditions on accepting a payment order where a sender does not have sufficient funds in its account with the Federal Reserve Bank to cover the amount of the sender's payment order and other obligations of the sender due or to become due to the Federal Reserve Bank. A Federal Reserve Bank may require a sender to execute a written agreement concerning security procedures or other matters before the sender may send payment orders to the Federal Reserve Bank.

(b) *Selection of an intermediary bank.* (1) Under section 4A-302, if a receiving bank, such as a Federal Reserve Bank, accepts a payment order, it must issue a payment order that complies with the sender's order. The sender's order may include instructions concerning an intermediary bank to be used that must be followed by a receiving bank (*see* section 4A-302(a)(1)). If the sender does not designate any intermediary bank in its payment order, the receiving bank may select an intermediary bank through which the sender's payment order can be expeditiously issued to the beneficiary's bank so long as the receiving bank exercises ordinary care in selecting the intermediary bank (*see* section 4A302(b)).

(2) This section provides that in an interdistrict transfer, a Federal Reserve Bank is authorized and directed to select another Federal Reserve Bank as an intermediary bank. A sender may, however, instruct a Federal Reserve Bank to use a particular intermediary bank by designating that bank as the bank to be credited by that Federal Reserve Bank (or the second Federal Reserve Bank in the case of an interdistrict transfer) in its payment order, in which case the Federal Reserve Bank will send the payment order to that bank if that bank receives payment orders through Fedwire. A sender may not instruct a Federal Reserve Bank to use its discretion to select an intermediary bank other than a Federal Reserve Bank or an intermediary bank designated by the sender. In addition, a sender may not instruct a Federal Reserve Bank to use a funds-transfer system or means of transmission other than Fedwire unless the sender and the Federal Reserve Bank agree in writing to the use of the funds-transfer system or means of transmission.

(c) *Same-day execution.* Generally, Fedwire is a same-day value transfer system through which funds may be transferred from the originator to the beneficiary on the same funds-transfer business day. A sender may not send a payment order to a Federal Reserve Bank that specifies an execution or payment date later than the day on which the payment order is issued, unless the sender of the order and the Federal Reserve Bank agree in writing to the arrangement.

Section 210.31—Payment by a Federal Reserve Bank to a receiving bank or beneficiary

(a) *Payment to a receiving bank.* (1) Under section 4A-402, when a Federal Reserve Bank executes a sender's payment order by issuing a conforming order to a receiving bank that accepts the payment order, the Federal Reserve Bank must pay the receiving bank the amount of the payment order. Section 210.29(a) authorizes a Federal Reserve Bank to make the payment by crediting the account at the Federal Reserve Bank maintained or used by the receiving bank. Section 210.31(a) provides that the payment occurs when the receiving bank's account is credited or when the payment order is sent by the Federal Reserve Bank to the receiving bank, whichever is earlier. Ordinarily, payment will occur during the funds transfer business day a short time after the payment order is received, even if the receiving bank is an off-line bank. This credit is final and irrevocable when made and constitutes final settlement under section 4A-403. Payment does not waive a Federal Reserve Bank's right of recovery under the applicable law of mistake and restitution (*see* § 210.32(c)), affect a Federal Reserve Bank's right to apply the funds to any obligation due or to become due to the Federal Reserve Bank, or affect legal process or claims by third parties on the funds.

(2) This section on final payment does not apply to settlement for payment orders between Federal Reserve Banks. These payment orders are settled by other means.

(b) *Payment to a beneficiary.* Section 210.31(b) specifies when a Federal Reserve Bank makes payment to a beneficiary for which it is the beneficiary's bank. As in the case of payment to a receiving bank, this payment occurs at the earlier of the time that the Federal Reserve Bank credits the beneficiary's account or sends notice of the credit to the beneficiary, and is final and irrevocable when made.

Section 210.32—Federal Reserve Bank Liability: Payment of Interest

(a) *Damages.* Under section 4A-305(d), damages for failure of a receiving bank to execute a payment order that it was obliged to execute by express agreement are limited to incidental expenses and interest and do not include additional damages, including consequential damages, unless they are provided for in an express written agreement of the receiving bank. This section clarifies that Federal Reserve Banks do not agree to be liable for consequential damages under this provision.

(b) *Payment of interest.* (1) Under Article 4A, a Federal Reserve Bank may be required to pay compensation in the form of interest to another party in connection with its handling of a funds transfer. For example, payment of compensation in the form of interest is required in certain situations pursuant to sections 4A-204 (relating to refund of payment and duty of customer to report with respect to unauthorized payment order), 4A-209 (relating to acceptance of payment order), 4A-210 (relating to rejection of payment order), 4A-304 (relating to duty of sender to report erroneously executed payment order), 4A-305 (relating to liability for late or improper execution or failure to execute a payment order), 4A-402 (relating to obligation of sender to pay receiving bank), and 4A-404 (relating to obligation of beneficiary's bank to pay and give notice to beneficiary). Under section 4A-506(a), the amount of such interest may be determined by agreement between the sender and receiving bank or by funds transfer system rule. If there is no such agreement, under section 4A-506(b), the amount of interest is based on the federal funds rate. Section 210.32(b) provides two means by which Federal Reserve Banks may provide compensation in the form of interest: Through an as of adjustment or through an explicit interest payment.

(2) An as of adjustment is a memorandum credit or debit that is applied to the reserve or clearing balance of the bank that sent the payment order to, or received the payment order from, a Federal Reserve Bank. Federal Reserve Banks generally provide as of adjustments to correct errors and recover float. An as of adjustment differs from a debit or credit to an account in that it does not affect the actual balance of the account; it only affects the balance for reserve or clearing balance computation purposes. These adjustments affect the level of reserve or clearing balances that the bank must fund by other means and are therefore an effective substitute for explicit interest payments.

(3) A bank must pass the benefit of an as of adjustment to an originator or beneficiary of a funds transfer that is entitled to compensation in the form of interest from a Federal Reserve Bank under Article 4A. The benefit may be passed on either in the form of a direct payment of interest or in the form of a compensating balance, if the originator or beneficiary agrees to accept the other form of compensation, and the value of the compensating balance is at least equivalent to the value of the explicit interest that would otherwise have been provided.

(4) In certain cases, the party that sent or received a payment order from a Federal Reserve Bank would be unable to make use of an as of adjustment as compensation in lieu of explicit interest. For example, if the sender or receiving bank is not subject to reserve requirements or satisfies its reserve requirements with vault cash, the as of adjustment could not be used to free other balances for investment. In these cases, the Federal Reserve Bank will provide compensation by an explicit interest payment. Interest would be calculated in accordance with the procedures specified in Section 4A-506(b). Similarly, compensation in the form of explicit interest will be paid to Government senders, receiving banks, or beneficiaries described in § 210.25(d) if they are entitled to interest under this Subpart.

(c) *Nonwaiver of right of recovery.* Several sections of Article 4A allow for a party to a funds transfer to make a claim pursuant to the applicable law of mistake and restitution. Nothing in subpart B or any Operating Circular issued under subpart B waives any such claim. A Federal Reserve Bank, however, may waive such a claim by express agreement in order to settle litigation or for other purposes.

Board of Governors of the Federal Reserve System.

June 1, 1990.

Jennifer J. Johnson,

Associate Secretary of the Board.

[FR Doc. 90-13137 Filed 6-6-90; 8:45 am]

BILLING CODE 6210-01-M

DEPARTMENT OF TRANSPORTATION

Federal Aviation Administration

14 CFR Part 39

[Docket No. 90-NM-94-AD]

Airworthiness Directives; Airbus Industrie Model A320 Series Airplanes

AGENCY: Federal Aviation Administration (FAA), DOT.

ACTION: Notice of proposed rulemaking (NPRM).

SUMMARY: This notice proposes to adopt a new airworthiness directive (AD), applicable to certain Airbus Industrie Model A320 series airplanes, which would require replacement of the ram air turbine (RAT) ejection jack with a new or modified ejection jack. This proposal is prompted by a report of a RAT failing to deploy on command in flight due to a malfunction of the ejection jack. This condition, if not corrected, could result in the RAT failing to deploy due to ejection jack overload and, subsequently, the RAT failing to provide hydraulic power in an emergency situation.

DATES: Comments must be received no later than July 30, 1990.

ADDRESSES: Send comments on the proposal in duplicate to the Federal Aviation Administration, Northwest Mountain Region, Transport Airplane Directorate, ANM-103, Attention: Airworthiness Rules Docket No. 90-NM-94-AD, 17900 Pacific Highway South, C-68966 Seattle, Washington 98168. The applicable service information may be obtained from Airbus Industrie, Airbus Support Division, Avenue Didier Daurat, 31700 Blagnac, France. This information may be examined at the FAA, Northwest Mountain Region, Transport Airplane Directorate, 17900 Pacific Highway South, Seattle, Washington, or the Standardization Branch, 9010 East Marginal Way South, Seattle, Washington.

FOR FURTHER INFORMATION CONTACT: Mr. Greg Holt, Standardization Branch, ANM-113; telephone (206) 431-1918. Mailing address: FAA, Northwest Mountain Region, 17900 Pacific Highway South, C-68966, Seattle, Washington 98168.

SUPPLEMENTARY INFORMATION: Interested persons are invited to participate in the making of the proposed rule by submitting such written data, views, or arguments as they may desire. Communications should identify the regulatory docket number and be sumitted in duplicate to the address specified above. All communications received on or before the closing date for comments specified above will be considered by the Administrator before taking action on the proposed rule. The proposals contained in this Notice may be changed in light of the comments received.

Comments are specifically invited on the overall regulatory, economic, environmental, and energy aspects of the proposed rule. All comments submitted will be available, both before and after the closing date for comments, in the Rules Docket for examination by interested persons. A report summarizing each FAA/public contact, concerned with the substance of this proposal, will be filed in the Rules Docket.

Commenters wishing the FAA to acknowledge receipt of their comments submitted in response to this Notice must submit a self-addressed, stamped post card on which the following statement is made: "Comments to Docket Number 90-NM-AD." The post card will be date/time stamped and returned to the commenter.

Discussion:

The Direction Generale de l'Aviation Civile (DGAC), which is the airworthiness authority of France, in accordance with existing provisions of a bilateral airworthiness agreement, has notified the FAA of an unsafe condition which may exist on certain Airbus Industrie Model A320 series airplanes. There has been a recent report of the ram air turbine (RAT) failing to deploy on command in flight due to a malfunction of the extension jack. This condition, if not corrected, could result in the RAT failing to deploy due to ejection jack overload and, subsequently, the RAT failing to provide hydraulic power in an emergency situation.

Airbus Industrie has issued Service Bulletin A320-29-1030, dated February 15, 1990, which describes procedures for removal and replacement of the RAT ejection jack with a new or modified ejection jack. The DGAC has classified this service bulletin as mandatory, and has issued Airworthiness Directive 89-160-003(B)R1 addressing this subject.

This airplane model is manufactured in France and type certificated in the United States under the provisions of § 21.29 of the Federal Aviation Regulations and the applicable bilateral airworthiness agreement.

Since this condition is likely to exist or develop on other airplanes of the same type design registered in the United States, an AD is proposed which would require replacement of the RAT ejection jack with a new or modified ejection jack in accordance with the service bulletin previously described.

It is estimated that 27 airplanes of U.S. registry would be affected by this AD, that it would take approximately 4 manhours per airplane to accomplish the required actions, and that the average labor cost would be $40 per manhour. Modification of the ejection jack will be performed by Dowty Rotol at no cost to the operators. Based on these figures, the total cost impact of the AD on U.S. operators is estimated to be $4,320.

The regulations proposed herein would not have substantial direct effects on the states, on the relationship between the national government and the states, or on the distribution of power and responsibilities among the various levels of government. Therefore, in accordance with Executive Order 12612, it is determined that this proposal would not have sufficient federalism implications to warrant the preparation of a Federalism Assessment.

For the reasons discussed above, I certify that this proposed regulation (1) is not a "major rule" under Executive Order 12291; (2) is not a "significant rule" under DOT Regulatory Policies and Procedures (44 FR 11034, February 26, 1979); and (3) if promulgated, will not have a significant economic impact, positive or negative, on a substantial number of small entities under the criteria of the Regulatory Flexibility Act. A copy of the draft evaluation prepared for this action is contained in the regulatory docket. A copy of it may be obtained from the Rules Docket.

List of Subjects in 14 CFR Part 39

Air Transportation, Aircraft, Aviation safety, Safety.

The Proposed Amendment

Accordingly, pursuant to the authority delegated to me by the Administrator, the Federal Aviation Administration proposes to amend 14 CFR part 39 of the Federal Aviation Regulations as follows:

PART 39—[AMENDED]

1. The authority citation for part 39 continues to read as follows:

Authority: 49 U.S.C. 1354(a), 1421 and 1423; 49 U.S.C. 106(g) (Revised Pub. L. 97-449, January 12, 1983); and 14 CFR 11.89.

§ 39.13 [Amended]

2. Section 39.13 is amended by adding the following new airworthiness directive:

Airbus Industrie: Applies to Model A320 series airplanes, which have not incorporated Modification 21892, certificated in any category. Compliance is required within 30 days after the effective date of this AD, unless previously accomplished.

To prevent failure of the ram air turbine (RAT) to deploy on command due to a malfunction of the extension jack, accomplish the following:

A. Remove ejection jack Part Number (P/N) 114160003, and replace with a new or modified ejection jack P/N 114160004 or 114160005, in accordance with Airbus Industrie Service Bulletin A320-29-1030, dated February 15, 1990.

B. An alternate means of compliance or adjustment of the compliance time, which provides an acceptable level of safety, may be used when approved by the Manager, Standardization Branch, ANM-113, FAA, Northwest Mountain Region.

Note.—The request should be forwarded through an FAA Principal Maintenance Inspector (PMI), who will either concur or comment and then send it to the Manager, Standardization Branch, ANM-113.

C. Special flight permits may be issued in accordance with FAR 21.197 and 21.199 to operate airplanes to a base in order to comply with the requirements of this AD.

All persons affected by this directive who have not already received the appropriate service documents from the manufacturer may obtain copies upon request to Airbus Industrie, Airbus Support Division, Avenue Didier Daurat, 31700 Blagnac, France. These documents may be examined at the FAA, Northwest Mountain Region Transport Airplane Directorate, 17900 Pacific Highway South, Seattle, Washington, or the Standardization Branch, 9010 East Marginal Way South, Seattle, Washington.

Issued in Seattle, Washington, on May 30, 1990.

Darrell M. Pederson,

Acting Manager, Transport Airplane Directorate, Aircraft Certification Service.

[FR Doc. 90-13173 Filed 6-6-90; 8:45 am]

BILLING CODE 4910-13-M

---

14 CFR Part 39

[Docket No. 90-ASW-3]

Airworthiness Directives; Bell Helicopter Textron, Inc. (BHTI) Model 206A, 206B, 206L, 206L-1, and 206L-3 Helicopters

AGENCY: Federal Aviation Administration (FAA), DOT.

ACTION: Notice of proposed rulemaking (NPRM).

SUMMARY: This notice proposes to adopt an airworthiness directive (AD) that would require the installation of flow restrictors on certain Bell Model 206A, B, L, L-1, and L-3 helicopter emergency float systems. The proposed AD is needed to prevent unequal float inflation which could result in aircraft rollover and impede emergency egress after an emergency water landing.

DATES: Comments must be received on or before July 23, 1990.

ADDRESSES: Comments on the proposal may be mailed in duplicate to: Regional Rules Docket, Office of the Assistant Chief Counsel, FAA, Fort Worth, Texas 76193-0007, Docket Number 90-ASW-3, or delivered in duplicate to: Regional Rules Docket, 4400 Blue Mound Road, Room 158, Building 3B, Fort Worth, Texas. Comments must be marked: Docket No. 90-ASW-3. Comments may be inspected at the above location in Room 158, Building 3B, between 8 a.m. and 4 p.m., weekdays, except Federal holidays.

The applicable service bulletins may be obtained from: Bell Helicopter Textron, Inc., P.O. Box 482, Fort Worth, Texas 76101, or may be examined in the Regional Rules Docket.

FOR FURTHER INFORMATION CONTACT: Mr. Roger P. Chudy, Rotorcraft Certification Office, ASW-170, FAA, Southwest Region, Fort Worth, Texas 76193-0170, telephone (817) 624-5167.

SUPPLEMENTARY INFORMATION: Interested persons are invited to participate in the making of the proposed rule by submitting such written data, views, or arguments as they may desire. Communications should identify the regulatory docket number and be submitted in duplicate to the address specified above. All communications received on or before the closing date for comments will be considered by the FAA before taking action on the proposed rule. The proposal contained in this notice may be changed in light of the comments received.

Comments are specifically invited on the overall regulatory, economic, environmental, and energy aspects of the proposed rule. All comments submitted will be available, both before and after the closing date for comments, in the Regional Rules Docket, Office of the Assistant Chief Counsel, 4400 Blue Mound Road, Room 158, Building 3B, Fort Worth, Texas, for examination by interested persons. A report summarizing each FAA-public contact, concerned with the substance of the proposed AD, will be filed in the Rules Docket.

Commenters wishing the FAA to acknowledge receipt of their comments submitted in response to this notice must submit a self-addressed, stamped postcard on which the following statement is made: "Comments to Docket Number 90-ASW-3." The postcard will be date/time stamped and returned to the commenter.

There have been reports of uneven inflation in the emergency float system installed on Bell Helicopter Textron, Inc. (BHTI), Model 206A, B, L, L-1, and L-3 helicopters during routine functional tests. A subsequent investigation by BHTI has revealed that the float bags may contain inflation valves produced by two different manufacturers. These valves have different inherent gas flow restriction characteristics, and as a result, a combination of the two could result in unequal float inflation if the system is actuated. The square body, brass type inflation valve, P/N 222-336-101-19 or -23, restricts the inflation gas flow less than the corresponding cylindrical stainless steel valve, P/N 222-336-101-119 or -123. Both of these valves may be in use in a given float system since the valves are fabricated to the same basic procurement specification, and therefore, had previously been considered interchangeable.

The brass inflation valves, P/N 222-336-101-19 or -23, may have been installed in float bags, P/N 206-050-248-107, -109 and -111, manufactured prior to September 1, 1989. These float bags may be found on BHTI Model 206A and B helicopters equipped with Emergency Float Kit 206-706-211, or on BHTI Model 206L, L-1 and L-3 helicopters equipped with Emergency Float Kit 207-706-210.

Since this condition is likely to exist on other emergency float bag systems of the same type design, the proposed AD would require a visual inspection for and the modification of the brass inflation valves, P/N 222-336-101-19 and -23.

The regulations proposed herein would not have substantial direct effects on the States, on the relationship between the national government and the States, or on the distribution of power and responsibilities among the various levels of government. Therefore, in accordance with Executive Order 12612, it is determined that this proposal will not have sufficient federalism implications to warrant the preparation of a Federalism Assessment.

The FAA has determined that this proposed regulation would involve an estimated 530 emergency float kits, each using 6 float bags. Approximately 9 manhours per kit would be required to identify and install restrictors on the affected inflation valves at a cost of $285 for the BHTI-supplied materials kit for a total cost per aircraft of $645, or $341,850 for the fleet. Therefore, I certify that this action: (1) Is not a "major rule" under Executive Order 12291; (2) is not a "significant rule" under DOT Regulatory Policies and Procedures (44 FR 11034; February 26, 1979); (3) does not warrant preparation of a regulatory evaluation as the anticipated impact is so minimal; and (4) if promulgated, will not have a significant economic impact, positive or negative, on a substantial number of small entities under the criteria of the Regulatory Flexibility Act.

List of Subjects in 14 CFR Part 39

Air transportation, aircraft, aviation safety, safety.

The Proposed Amendment

Accordingly, pursuant to the authority delegated to me by the Administrator, the Federal Aviation Administration proposes to amend part 39 of the Federal Aviation Regulations (14 CFR 39.13) as follows:

PART 39—[AMENDED]

1. The authority citation for part 39 continues to read as follows:

Authority: 49 U.S.C. 1354(a), 1421 and 1423; 49 U.S.C. 106(g) (Revised Pub. L. 97-449, January 12, 1983); and 14 CFR 11.89.

§ 39.13 [Amended]

2. Section 39.13 is amended by adding the following new AD:

Bell Helicopter Textron, Inc. (BHTI): Applies to Model 206A, 206B, 206L, 206L-1, and 206L-3 helicopters equipped with emergency float bags, P/N 206-050-248-107, -109 and -111 manufactured prior to September 1, 1989, and all spare float bags manufactured prior to September 1, 1989. These float bags are used in BHTI emergency float kits 206-706-210 and 206-706-211. (Docket No. 90-ASW-3)

Compliance is required as indicated, unless already accomplished.

To prevent unequal float inflation which could result in aircraft rollover and impede emergency egress during an emergency water landing, accomplish the following:

(a) Within the next 100 hours' time in service, inspect each float bag to determine if any square body, brass type inflation valves, P/N 222-336-101-19 or -23, are installed. If any of these valves are found, install an appropriate flow restrictor in accordance with the instructions in Appendix I of this AD for Models 206 A and B, or Appendix II of this AD for Models 206L, L-1, and L-3, as applicable.

(b) An alternative method of compliance, which provides an equivalent level of safety, may be used if approved by the Manager, Rotorcraft Certification Office, ASW-170, FAA, Southwest Region, Fort Worth, Texas 76193-0170, telephone (817) 624-5170.

(c) In accordance with FAR §§ 21.197 and 21.199, flight is permitted to a base where the requirements of this AD may be accomplished.

Note.—This AD contains material from BHTI Alert Service Bulletin Nos. 206-89-49, dated Oct. 10, 1989, and 206L-89-63, dated Oct. 10, 1989.

Issued in Fort Worth, Texas, on May 24, 1990.

Henry A. Armstrong,

Acting Manager, Rotorcraft Directorate, Aircraft Certification Service.

Appendix I

Model Affected: 206A/B/BIII

Subject: Emergency Float Bag Inflation Valve Restrictors—Installation of, (Service Instruction 206-115).

Helicopters Affected: Helicopters equipped with emergency float kit 206-706-211 per Service Instruction 206-115. Float bags 206-050-248-107 and -109 fitted with brass type inflation valves (square body). Part Nunber 206-050-248-107 and -109 float bags manufactured after 1 September 1989 will comply with the intent of this bulletin.

Description: A recent evaluation of the light weight emergency float kit inflation performance has revealed that float bags fitted with brass type inflation valves (square body) many inflate at a different rate than float bags fitted with stainless steel type inflation valves (cylindrical body).

As a result, a combination within one system of float bags having brass inflation valves mixed with float bags having stainless steel valves, could result in an unbalance or unacceptable float bag pressure if system is actuated.

To eliminate this possible system inbalance, a restrictor has been developed for installation on brass inflation valves only. This will ensure a compatible flow rate with stainless steel valves.

This Alert Service Bulletin requires the installation of restrictors on all float bags fitted with brass type inflation valves and reidentification of affected bags.

Materials:

Item and Part Number	Description	Quantity
1. 206-073-860-101.	Restrictors	8 per ship set.
2.	Permalok Surface Conditioner.	6 oz. spray can.
3. HM160	Permalok Adhesive.	1 of 10 ML.

Note

—206-050-248-107 Bags require 1 restrictor each

—206-050-248-109 Bags require 2 restrictors each

—Order one complete ship set of restrictors for each float kit assembly.

—Order individual restrictor(s) for spare bags.

Reference: Service Instructioin 206-115.

Publications Affected: Service Instruction 206-115.

Accomplishment Instructions:

1. In order to determine if retrofit restrictor is required, establish which type of inflation valve is installed on individual bags. To do so, it is necessary to visually inspect each bag.

2. All 206-050-248 spare float bags fitted with brass type inflation valve must be modified in accordance with this bulletin prior to future installation. For spare bags, proceed per steps 6 through 11 of this bulletin.

Note.—The aft bags (-109) have 2 valves and if they are of the brass type, each will require a restrictor.

3. If bags are installed on skid gear, remove screws securing bag, cover, and retainer to skid tube. Roll the float bag over to expose plumbing and inflation valve assembly. For A/C records, note bag P/N, S/N, skid location and type of valve installed. (See Figure 1, Page 5.)

4. Determine type of inflation valve installed. If brass valve, proceed to Step 5 of this bulletin and install restrictor(s) accordingly. If stainless steel valve, proceed to Step 12 of this bulletin.

5. Disconnect hose(s) at bag inflation valve(s).

6. Using a cotton swab and MEK, clean inlet port faying surfaces of brass valve to a depth of approximately .500 inch. Scotchbrite may be used as required. Allow to dry.

CAUTION: Keep MEK away from rubber coated surfaces.

7. Clean restrictor using MEK and Scotchbrite and allow to dry.

8. Protect rubberized surfaces by shielding around valve assembly. Using paper to prevent spray contamination. Apply one spray coat of Perma-Lok surface conditioner to faying surfaces of both valve assembly and restrictor (see Page 6, Figure 2). Allow to dry 3-5 minutes.

9. Apply adhesive to faying surfaces (fill half of restrictor cup) and install restrictor in valve stem. Rotate restrictor 360 degrees to ensure adhesive is evenly distributed and wipe off excess adhesive. (Refer to Figure 2, Page 6 for stack-up.) Ensure restrictor bore is clear of adhesive after installation.

10. Connect hose to inflation valve and apply standard torque for installation. (60-90 inch/lbs.)

Note: If flat bag is spare, use a flared tube and "B" nut of correct size to apply torque pressure.

Allow to cure under torque pressure for at least 72 hours. System may be returned to service during this time.

11. Reidentify flat bags as follows:

—Using commercially available acrylic enamel paint or a stencil ink in a white or yellow color, add the letters "FM" immediately following the bag part number.

—Letters should be the same size format as bag P/N.

—Prior to application of lettering, clean bag area by wiping with a lint free cloth dampened with alcohol.

Allow to dry before repacking float bags in accordance with procedures contained in Service Instruction 206-115.

12. Align retainer, cover and girt of float bag and secure to skid tube using screws removed.

13. Repack float bags in accordance with procedures contained in Service Instruction 206-115.

14. Repeat the above procedure for each 206-050-248 series.

BILLING CODE 4910-13-M

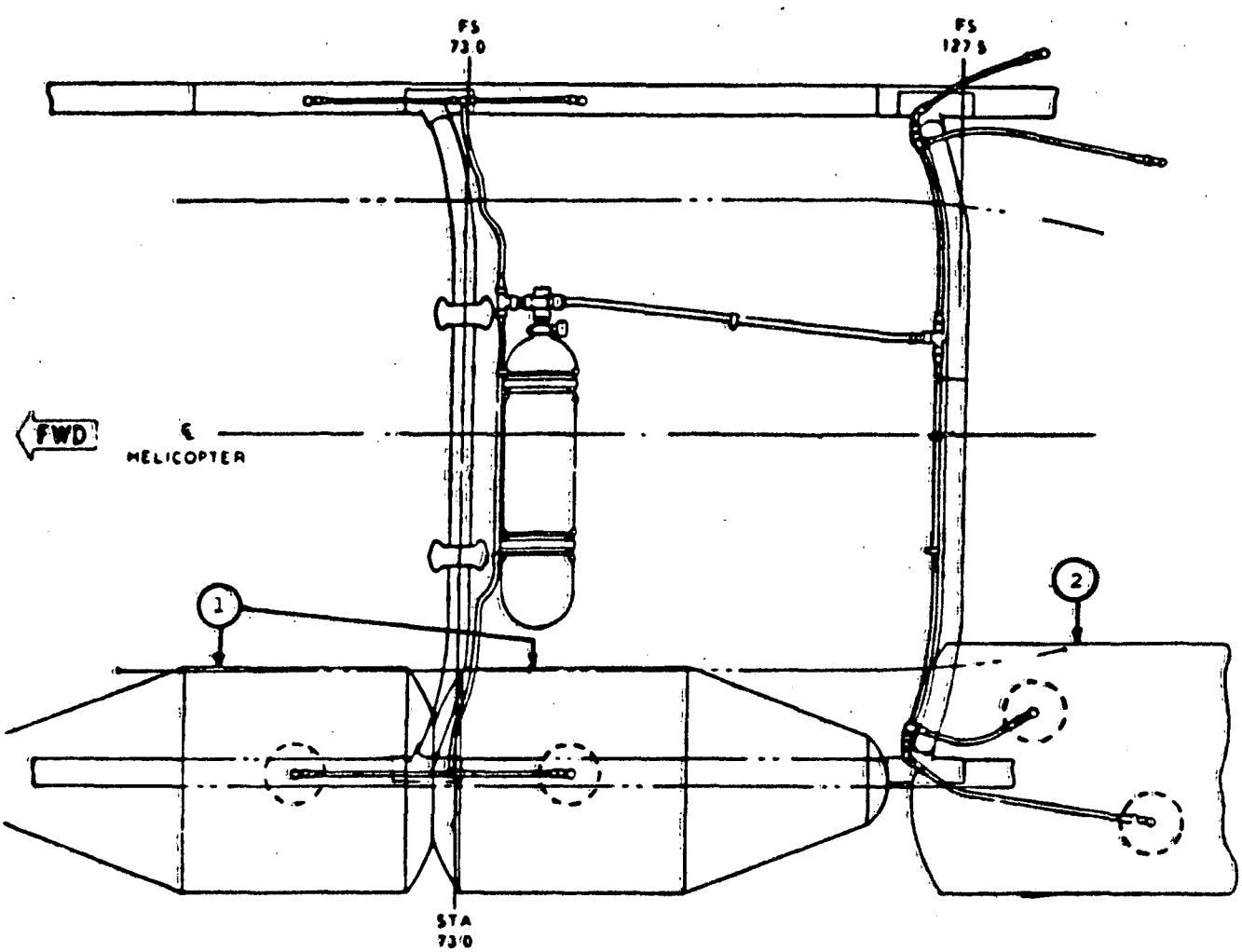

TYPICAL VIEW LOOKING DOWN

BRASS INFLATION VALVES, AFFECTED LOCATIONS. (TYP.)

1. 206-050-248-107 FLOAT BAG.
2. 206-050-249-109 FLOAT BAG.

FIGURE 1

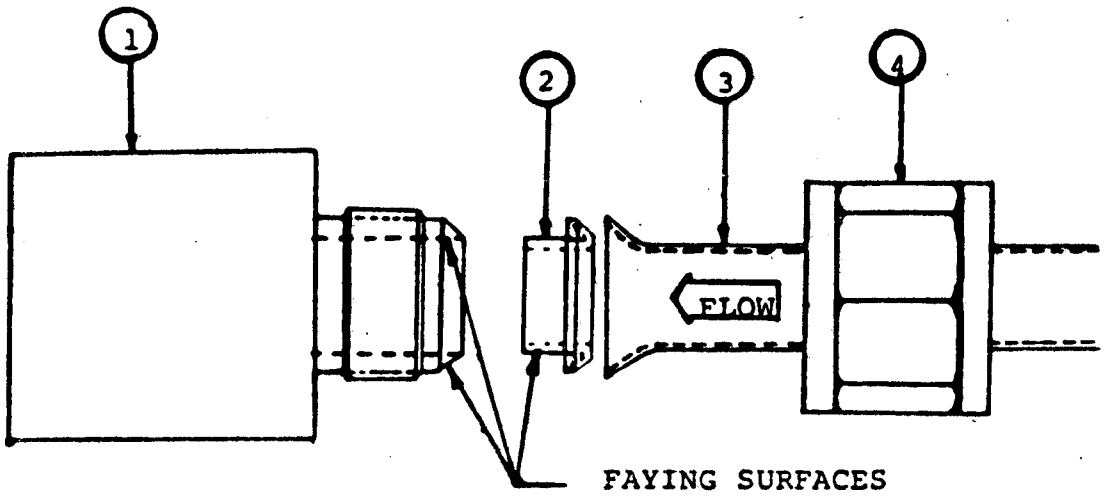

1. BRASS INFLATION VALVE.
2. RESTRICTOR.
3. TUBE.
4. NUT.

FIGURE 2

BILLING CODE 4910-13-C

Appendix II

Model Affected: 206L/L-1/L-III

Subject: Emergency Float Bag Inflation Valve Restrictors—Installation of, (Service Instruction 206-2033).

Helicopters Affected: Helicopters equipped with emergency float kit 206-706-210 per Service Instruction 206-2033. Float bags 206-050-248-107/-109 and -111.

Part Number 206-050-248-107, -109 and -111 float bags manufactured after 1 September 1989 will comply with the intent of this bulletin.

Description: A recent evaluation of the light weight emergency float kit inflation performance has revealed that float bags fitted with brass type inflation valves (square body) may inflate at a different rate than float fitted with stainless steel type inflation valves (cylindrical body).

As a result, a combination within one system of float bags having brass inflation valves mixed with float bags having stainless steel valves, could result in an unbalance or unacceptable float bag pressure if system is actuated.

To eliminate this possible system inbalance, a restrictor has been developed for installation on brass inflation valves only. This will ensure a compatible flow rate with stainless steel valves.

This Alert Service Bulletin requires the installation of restrictors on all float bags fitted with brass type inflation valves and reidentification of affected bags.

Materials:

Item and Part Number	Description	Quantity
1. 206-073-860-101.	Restrictor	6 Per ship set.
2. 206-073-860-103.	Restrictor	2 Per ship set.
3.	Permalok Surface Conditioner.	1 of 6 oz. spray can.
4. HM 160	Permalok adhesive.	1 of 10 ML.

Note

—Each 206-050-248-107 bag requires 1 of -101 restrictor.

—Each 206-050-248-109 bag requires 2 of -101 restrictor.

—Each 206-050-248-111 bag requires 1 of -103 restrictor.

Note.—No restrictor required on aft valve. See Δ Fig. 1.

—Order one complete ship set of restrictions for each float kit assembly.

—Order individual restrictor(s) for spare bags.

Reference: Service Instruction 206-2033

Publications Affected: Service Instruction 206-2033

Accomplishment Instructions:

1. In order to determine if retrofit restrictor is required, establish which type of inflation valve is installed on individual bags. To do so, it is necessary to visually inspect each bag.

2. All 206-050-248 spare float bags fitted with brass type inflation valve must be modified in accordance with this bulletin prior to future installation. For spare bags, proceed per Steps 6 through 11 of this bulletin.

Note.—The aft bags (-109) have 2 valves and if they are of the brass type, each will require a restrictor.

CAUTION: DO NOT INSTALL A RESTRICTOR IN AFT VALVE OF -111 (MID) BAG. SEE Δ FIG. 1.

3. If bags are installed on skid gear, remove screws securing bag, cover, and retainer to skid tube. Roll the float bag over to expose plumbing and inflation valve assembly. For A/C records, note bag P/N, S/N, skid location and type of valve installed. (See Figure 1, Page 5).

4. Determine type of inflation valve installed. If brass valve, proceed to Step 5 of this bulletin and install restrictor(s) accordingly. If stainless steel valve, proceed to Step 12 of this bulletin.

5. Disconnect hose(s) at bag inflation valve(s).

6. Using a cotton swab and MEK, clean inlet port faying surfaces of brass valve to a depth of approximately .500 inch. Scotchbrite may be used as required. Allow to day.

CAUTION: Keep MEK away from rubber coated surfaces.

7. Clean restrictor using MEK and Scotchbrite and allow to dry.

8. Protect rubberized surfaces by shielding around value assembly. Using paper to prevent spray contamination, apply one spray coat of Perma-lok surface conditioner to faying surfaces of both valve assembly and restrictor. (See Figure 2, Page 6). Allow to dry 3-5 minutes.

9. Apply adhesive to faying surfaces (fill half of restrictor cup) and install restrictor in valve stem. Rotate restrictor 360 degrees to ensure adhesive is evenly distributed and wipe off excess adhesive. (See Figure 2 for stack-up). Ensure restrictor bore is clear of adhesive after installation.

10. Connect hose to inflation valve and apply standard torque for installation. (Fwd and aft bags 60-90 in/lbs mid bags 200 to 250 in/lbs.

Note.—If float bag is spare, use a flared tube and "B" nut of correct size to apply torque pressure.

Allow to cure under torque pressure for at least 72 hours. System may be returned to service during this time.

11. Reidentify float bags as follows:

—Using commercially available acrylic enamel paint or a stencil ink in a white or yellow color, add the letters "FM" immediately following the bag part number.

—Letters should be the same size format as bag P/N.

—Prior to application of lettering, clean bag area by wiping with a lint free cloth dampened with alcohol.

—Allow to dry.

12. Align retainer, cover and girt of float bag and secure to skid tube using screws removed.

13. Repack float bags in accordance with procedures contained in Service Instruction 206-2033.

14. Allow to dry before repacking float bags in accordance with procedures contained in Service Instruction 206-2033.

BILLING CODE 4910-13-M

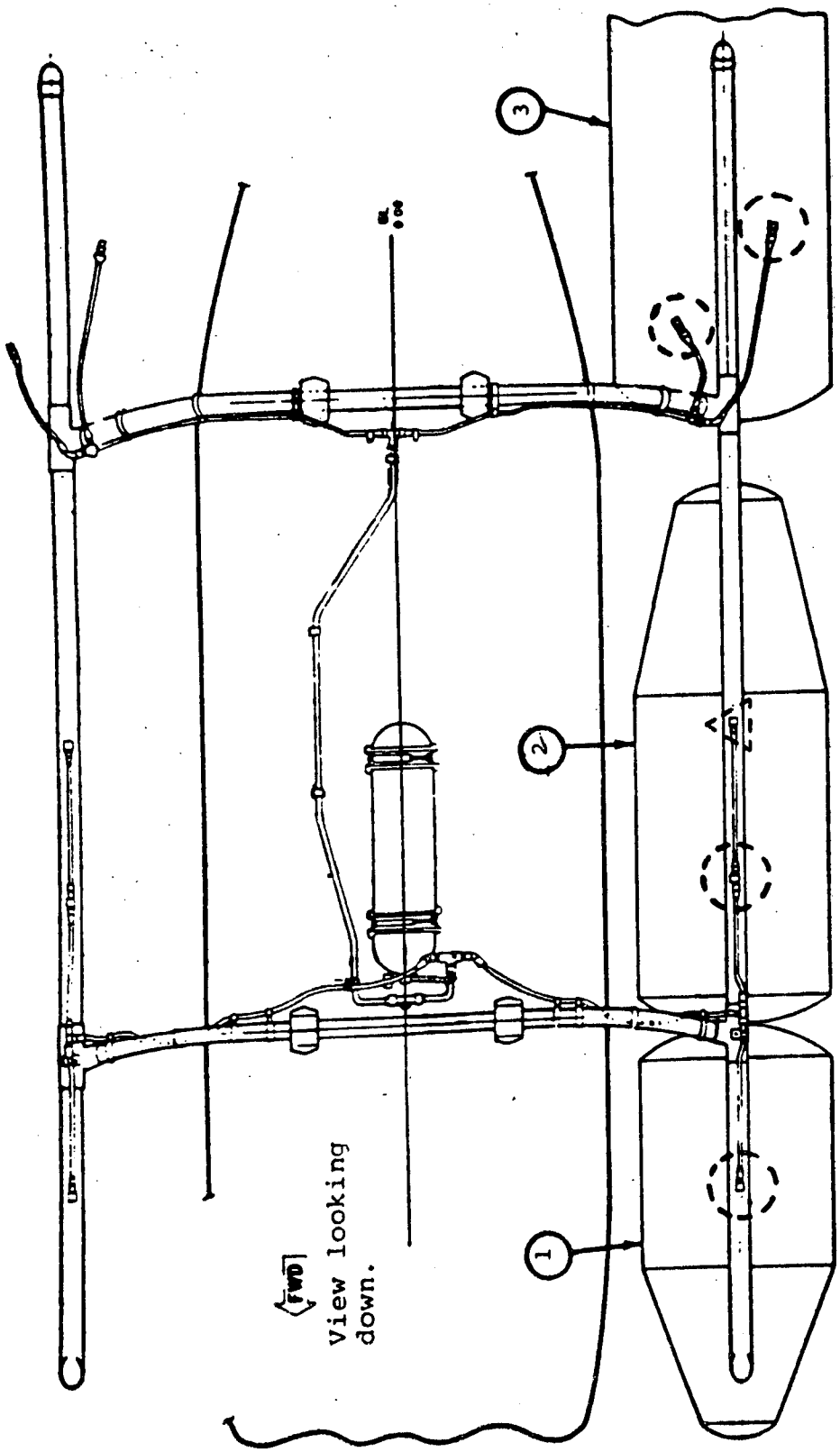

- BRASS INFLATION VALVES, AFFECTED LOCATIONS. (TYP.)

1 - 206-050-248-107 FLOAT BAG.
2 - 206-050-248-111 FLOAT BAG.
3 - 206-050-248-109 FLOAT BAG.

A - DO NOT ADD RESTRICTOR AT THIS LOCATION

FIGURE 1

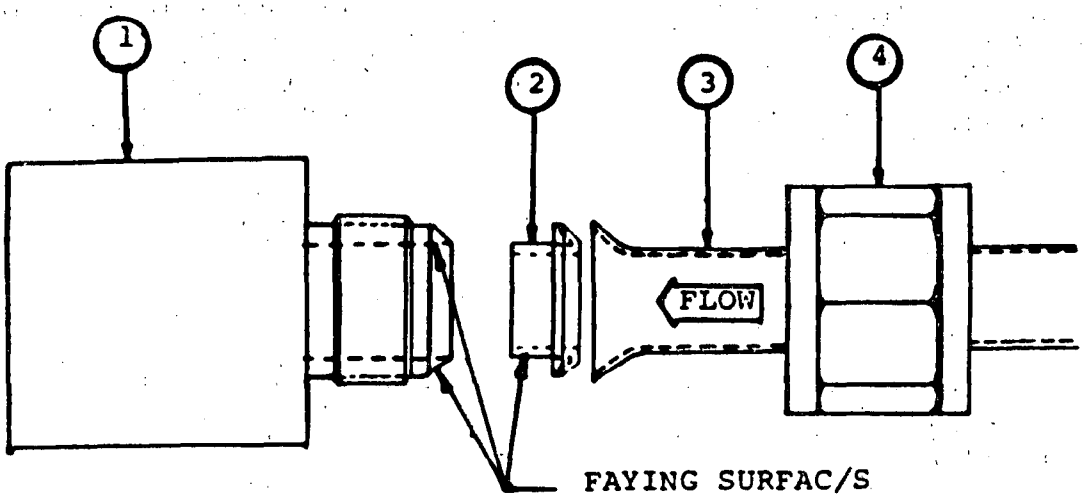

1. BRASS INFLATION VALVE.

2. RESTRICTOR.

3. TUBE.

4. NUT.

FIGURE 2

[FR Doc. 90-13172 Filed 6-6-90; 8:45 am]
BILLING CODE 4910-13-C

14 CFR Part 39

[Docket No. 90-NM-93-AD]

Airworthiness Directives; Airbus Industrie Model A310-200 Series Airplanes

AGENCY: Federal Aviation Administration (FAA), DOT.

ACTION: Notice of proposed rulemaking (NPRM).

SUMMARY: This notice proposes to adopt a new airworthiness directive (AD), applicable to certain Airbus Industrie Model A310-200 series airplanes, which would require repetitive X-ray inspections to detect cracks in certain stringers, and repair, if necessary. This proposal is prompted by full-scale fatigue testing by the manufacturer, which identified cracks in the area of the stringer run-outs inboard and outboard of Rib 14 at Stringers 6, 7, 8, and 9. This condition, if not corrected, could result in reduced structural capability of the wings.

DATES: Comments must be received no later than July 30, 1990.

ADDRESSES: Send comments on the proposal in duplicate to the Federal Aviation Administration, Northwest Mountain Region, Transport Airplane Directorate, ANM-103, Attention: Airworthiness Rules Docket No. 90-NM-93-AD, 17900 Pacific Highway South, C-68966, Seattle, Washington 98168. The applicable service information may be obtained from Airbus Industrie, Airbus Support Division, Avenue Didier Daurat, 31700 Blagnac, France. This information may be examined at the FAA, Northwest Mountain Region, Transport Airplane Directorate, 17900 Pacific Highway South, Seattle, Washington, or the Standardization Branch, 9010 East Marginal Way South, Seattle, Washington.

FOR FURTHER INFORMATION CONTACT: Mr. Greg Holt, Standardization Branch, ANM-113; telephone (206) 431-1918. Mailing address: FAA, Northwest Mountain Region, 17900 Pacific Highway South, C-68966, Seattle, Washington 98168.

SUPPLEMENTARY INFORMATION: Interested persons are invited to participate in the making of the proposed rule by submitting such written data, views, or arguments as they may desire. Communications should identify the regulatory docket number and be submitted in duplicate to the address specified above. All communications received on or before the closing date for comments specified above will be considered by the Administrator before taking action on the proposed rule. The proposals contained in this Notice may be changed in light of the comments received

Comments are specifically invited on the overall regulatory, economic, environmental, and energy aspects of the proposed rule. All comments submitted will be available, both before and after the closing date for comments, in the Rules Docket for examination by interested persons. A report summarizing each FAA/public contact, concerned with the substance of this proposal, will be filed in the Rules Docket.

Commenters wishing the FAA to acknowledge receipt of their comments submitted in response to this Notice must submit a self-addressed, stamped post card on which the following statement is made: "Comments to Docket Number 90-NM-93-AD." The post card will be date/time stamped and returned to the commenter.

Discussion

The Direction Générale de l'Aviation Civile (DGAC), which is the airworthiness authority of France, in accordance with existing provisions of a bilateral airworthiness agreement, has notified the FAA of an unsafe condition which may exist on certain Airbus Industrie Model A310-200 series airplanes.

Full-scale fatigue testing by the manufacturer has revealed cracks in the area of the stringer run-outs inboard and outboard of Rib 14 at Stringers 6, 7, 8, and 9. These cracks were discovered at approximately 50,000 simulated flight cycles. This condition, if not corrected, could result in reduced structural capability of the wings.

Airbus Industrie has issued Service Bulletin A310-57-2038, dated November 6, 1989, which describes procedures for repetitive X-ray inspections to detect cracks in Stringers 6, 7, 8, and 9 run-outs inboard and outboard of Rib 14, and repair, if necessary. The DGAC has classified this service bulletin as mandatory and has issued Airworthiness Directive 89-195-100(B) addressing this subject.

This airplane model is manufactured in France and type certificated in the United States under the provisions of § 21.29 of the Federal Aviation Regulations and the applicable bilateral airworthiness agreement.

Since this condition is likely to exist or develop on other airplanes of the same type design registered in the United States, an AD is proposed which would require repetitive X-ray inspections to detect cracks in Stringers 6, 7, 8, and 9 run-outs inboard and outboard of Rib 14, and repair, if necessary, in accordance with the service bulletin previously described.

It is estimated that 7 airplanes of U.S. registry would be affected by this AD, that it would take approximately 6 manhours per airplane to accomplish the required actions, and that the average labor cost would be $40 per manhour. Based on these figures, the total cost impact of the AD on U.S. operators is estimated to be $1,680.

The regulations proposed herein would not have substantial direct effects on the states, on the relationship between the national government and the states, or on the distribution of power and responsibilities among the various levels of government. Therefore, in accordance with Executive Order 12612, it is determined that this proposal would not have sufficient federalism implications to warrant the preparation of a Federalism Assessment.

For the reasons discussed above, I certify that this proposed regulation (1) Is not a "major rule" under Executive Order 12291; (2) is not a "significant rule" under DOT Regulatory Policies and Procedures (44 FR 11034, February 26, 1979); and (3) if promulgated, will not have a significant economic impact, positive or negative, on a substantial number of small entities under the criteria of the Regulatory Flexibility Act. A copy of the draft evaluation prepared for this action is contained in the regulatory docket. A copy of it may be obtained from the Rules Docket.

List of Subjects in 14 CFR Part 39

Air transportation, Aircraft, Aviation safety, Safety.

The Proposed Amendment

Accordingly, pursuant to the authority delegated to me by the Administrator, the Federal Aviation Administration proposes to amend 14 CFR part 39 of the Federal Aviation Regulations as follows:

PART 39—[AMENDED]

1. The authority citation for part 39 continues to read as follows:

Authority: 49 U.S.C. 1354(a), 1421 and 1423; 49 U.S.C. 106(g) (Revised Pub. L. 97-449, January 12, 1983); and 14 CFR 11.89.

§ 39.13 [Amended]

2. Section 39.13 is amended by adding the following new airworthiness directive:

Airbus Industrie: Applies to Model A310-200 series airplanes, up to and including serial number 264, certificated in any category. Compliance is required as indicated, unless previously accomplished.

To prevent reduced structural capability of the wings, accomplish the following:

A. Prior to the accumulation of 12,000 landings, or within 1,500 landings after the effective date of this AD, whichever occurs later, and thereafter at intervals not to exceed 12,000 landings, perform an X-ray inspection of Stringers 6, 7, 8, and 9 run-outs inboard and outboard of Rib 14, in accordance with Airbus Industrie Service Bulletin A310-57-2038, dated November 6, 1989.

B. If cracks are found, repair prior to further flight in accordance with a procedure approved by the Manager, Standardization Branch, ANM-113, FAA, Northwest Mountain Region.

C. An alternate means of compliance or adjustment of the compliance time, which provides an acceptable level of safety, may be used when approved by the Manager, Standardization Branch, ANM-113, FAA, Northwest Mountain Region.

Note: The request should be forwarded through an FAA Principal Maintenance Inspector (PMI), who will either concur or comment and then send it to the Manager, Standardization Branch, ANM-113.

D. Special flight permits may be issued in accordance with FAR 21.197 and 21.199 to operate airplanes to a base in order to comply with the requirements of this AD.

All persons affected by this directive who have not already received the appropriate service documents from the manufacturer may obtain copies upon request to Airbus Industrie, Airbus Support Division, Avenue Didier Daurat, 31700 Blagnac, France. These documents may be examined at the FAA, Northwest Mountain Region, Transport Airplane Directorate, 17900 Pacific Highway South, Seattle, Washington, or the Standardization Branch, 9010 East Marginal Way South, Seattle, Washington.

Issued in Seattle, Washington, on May 30, 1990.

Darrell M. Pederson,

Acting Manager, Transport Airplane Directorate, Aircraft Certification Service.

[FR Doc. 90-13174 Filed 6-6-90; 8:45 am]

BILLING CODE 4910-13-M

---

14 CFR Part 39

[Docket No. 90-NM-91-AD]

Airworthiness Directives; Airbus Industrie Model A320-111, A320-211, and A320-231 Series Airplanes

AGENCY: Federal Aviation Administration (FAA), DOT.

ACTION: Notice of proposed rulemaking (NPRM).

SUMMARY: This notice proposes to adopt a new airworthiness directive (AD), applicable to all Airbus Industrie Model A320-111, A320-211, and A320-231 series airplanes, which would require disconnecting the two wires controlling the test function of certain angle of attack sensors. This proposal is prompted by a safety analysis which disclosed that there is insufficient segregation of the test control circuits of the angle of attack sensors. This condition, if not corrected, could result in simultaneous activation in flight of the test function of two of the angle of attack sensors and a subsequent incorrect pitch-down command to the elevator.

DATES: Comments must be received no later than July 30, 1990.

ADDRESSES: Send comments on the proposal in duplicate to the Federal Aviation Administration, Northwest Mountain Region, Transport Airplane Directorate, ANM-103, Attention: Airworthiness Rules Docket No. 90-NM-91-AD, 17900 Pacific Highway South, C-68966, Seattle, Washington, 98168. The applicable service information may be obtained from Airbus Industrie, Airbus Support Division, Avenue Didier Daurat, 31700 Blagnac, France. This information may be examined at the FAA, Northwest Mountain Region, Transport Airplane Directorate, 17900 Pacific Highway South, Seattle, Washington, or the Standardization Branch, 9010 East Marginal Way South, Seattle, Washington.

FOR FURTHER INFORMATION CONTACT: Mr. Greg Holt, Standardization Branch, ANM-113; telephone (206) 431-1918. Mailing address: FAA, Northwest Mountain Region, 17900 Pacific Highway South, C-68966, Seattle, Washington 98168.

SUPPLEMENTARY INFORMATION: Interested persons are invited to participate in the making of the proposed rule by submitting such written data, views, or arguments as they may desire. Communications should identify the regulatory docket number and be submitted in duplicate to the address specified above. All communications received on or before the closing date for comments specified above will be considered by the Administrator before taking action on the proposed rule. The proposals contained in this Notice may be changed in light of the comments received.

Comments are specifically invited on the overall regulatory, economic, environmental, and energy aspects of the proposed rule. All comments submitted will be available, both before and after the closing date for comments, in the Rules Docket for examination by interested persons. A report summarizing each FAA/public contact, concerned with the substance of this proposal, will be filed in the Rules Docket.

Commenters wishing the FAA to acknowledge receipt of their comments submitted in response to this Notice must submit a self-addressed, stamped post card on which the following statement is made: "Comments to Docket Number 90-NM-91-AD." The post card will be date/time stamped and returned to the commenter.

Discussion

The Direction Generale de l'Aviation Civile (DGAC), which is the airworthiness authority of France, in accordance with existing provisions of a bilateral airworthiness agreement, has notified the FAA of an unsafe condition which may exist on all Airbus Industrie Model A320-111, A320-211, and A320-231 series airplanes. A safety analysis has revealed there is insufficient segregation of the test control circuits of the angle of attack sensors. This condition, if not corrected, could result in simultaneous activation in flight of the test function of two of the angle of attack sensors, and a subsequent incorrect pitch-down command to the elevator.

Airbus Industrie has issued Service Bulletin A320-34-1012, Revision 1, dated April 10, 1990, which describes procedures to disconnect the wiring that controls the motors of angle of attack sensors 3FP2 and 3FP3. The DGAC has classified this service bulletin as mandatory, and has issued Airworthiness Directive 90-018-006(B) addressing this subject.

This airplane model is manufactured in France and type certificated in the United States under the provisions of § 21.29 of the Federal Aviation Regulations and the applicable bilateral airworthiness agreement.

Since this condition is likely to exist or develop on other airplanes of the same type design registered in the United States, an AD is proposed which would require disconnecting and modifying the wiring that controls the motors of angle of attack sensors 3FP2 and 3FP3, in accordance with the service bulletin previously described.

It is estimated that 17 airplanes of U.S. registry would be affected by this AD, that it would take approximately 3.5 manhours per airplane to accomplish the required actions, and that the average labor cost would be $40 per manhour. Based on these figures, the total cost impact of the AD on U.S. operators is estimated to be $2,380.

The regulations proposed herein would not have substantial direct effects on the States, on the relationship

between the national government and the States, or on the distribution of power and responsibilities among the various levels of government. Therefore, in accordance with Executive Order 12612, it is determined that this proposal would not have sufficient federalism implications to warrant the preparation of a Federalism Assessment.

For the reasons discussed above, I certify that this proposed regulation (1) Is not a "major rule" under Executive Order 12291; (2) is not a "significant rule" under DOT Regulatory Policies and Procedures (44 FR 11034, February 25, 1979); and (3) if promulgated, will not have a significant economic impact, positive or negative, on a substantial number of small entities under the criteria of the Regulatory Flexibility Act. A copy of the draft evaluation prepared for this action is contained in the regulatory docket. A copy of it may be obtained from the Rules Docket.

List of Subjects in 14 CFR Part 39:

Air transportation, Aircraft, Aviation safety, Safety.

The Proposed Amendment

Accordingly, pursuant to the authority delegated to me by the Administrator, the Federal Aviation Administration proposes to amend 14 CFR part 39 of the Federal Aviation Regulations as follows:

PART 39—[AMENDED]

1. The authority citation for part 39 continues to read as follows:

Authority: 49 U.S.C. 1354(a), 1421 and 1423; 49 U.S.C. 106(g) (Revised Pub. L. 97–449, January 12, 1983); and 14 CFR 11.89.

§ 39.13 [Amended]

2. Section 39.13 is amended by adding the following new airworthiness directive:

Airbus Industrie: Applies to all Model A320–111, A320–211, and A320–231 series airplanes, certified in any category. Compliance is required within the next 350 hours time-in-service after the effective date of this AD, unless previously accomplished.

To prevent the simultaneous activation in flight of two angle of attack sensors and subsequent incorrect pitch-down command to the elevator, accomplish the following:

A. Disconnect and modify the wiring in the relay box 103VU, in Zone 127, and in Zone 232, in accordance with Airbus Industrie Service Bulletin A320–34–1012, Revision 1, dated April 10, 1990.

B. An alternate means of compliance or adjustment of the compliance time, which provides an acceptable level of safety, may be used when approved by the Manager, Standardization Branch, ANM–113, FAA, Northwest Mountan Region.

Note: The request should be forwarded through an FAA Principal Avionics Inspector (PAI), who will either concur or comment and then send it to the Manager, Standardization Branch ANM–113

C. Special flight permits may be issued in accordance with FAR 21.197 and 21.199 to operate airplanes to a base in order to comply with the requirements of this AD.

All persons affected by this directive who have not already received the appropriate service documents from the manufacturer may obtain copies upon request to Airbus Industrie, Airbus Support Division, Avenue Didier Daurat, 31700 Blagnac, France. These documents may be examined at the FAA, Northwest Mountain Region, Transport Airplane Directorate, 17900 Pacific Highway South, Seattle, Washington, or the Standardizaton Branch, 9010 East Marginal Way South, Seattle, Washington.

Issued in Seattle, Washington, on May 30, 1990.

Darrell M. Pederson,

Acting Manager, Transport Airplane Directorate, Aircraft Certification Service.

[FR Doc. 90–13175 Filed 6–6–90; 8:45 am]

BILLING CODE 4910–13–M

---

14 CFR Part 39

[Docket No. 90–NM–89–AD]

Airworthiness Directives; Boeing Model 757 Series Airplanes

AGENCY: Federal Aviation Administration (FAA), DOT.

ACTION: Notice of proposed rulemaking (NPRM).

SUMMARY: This notice proposes to adopt a new airworthiness directive (AD), applicable to certain Boeing Model 757 series airplanes, which would require replacement of the latch subassembly of the ram air turbine (RAT) deployment actuator. This proposal is prompted by a report that a deployment actuator failed to deploy the RAT. This condition, if not corrected, could result in the loss of all hydraulic power if the RAT fails to deploy in the event of a dual engine failure.

DATES: Comments must be received no later than July 30, 1990.

ADDRESSES: Send comments on the proposal in duplicate to the Federal Aviation Administration, Northwest Mountain Region, Transport Airplane Directorate, ANM–103, Attention: Airworthiness Rules Docket No. 90–NM–89–AD, 17900 Pacific Highway South, C–68966, Seattle, Washington 98168. The applicable service information may be obtained from Boeing Commercial Airplanes, P.O. Box 3707, Seattle, Washington 98124, or Arkwin Industries Incorporated, 686 Main Street, Westbury, New York 11590. This information may be examined at the FAA, Northwest Mountain Region, Transport Airplane Directorate, 17900 Pacific Highway South, Seattle, Washington, or Seattle Aircraft Certification Office, 9010 East Marginal Way South, Seattle, Washington.

FOR FURTHER INFORMATION CONTACT: Susan Letcher, Systems & Equipment Branch, ANM–130S; telephone (206) 431–1947. Mailing address: FAA, Northwest Mountain Region, 17900 Pacific Highway South, C–68966, Seattle, Washington 98168.

SUPPLEMENTARY INFORMATION: Interested persons are invited to participate in the making of the proposed rule by submitting such written data, views, or arguments as they may desire. Communications should identify the regulatory docket number and be submitted in duplicate to the address specified above. All communications received on or before the closing date for comments specified above will be considered by the Administration before taking action on the proposed rule. The proposals contained in this Notice may be changed in light of the comments received.

Comments are specifically invited on the overall regulatory, economic, environmental, and energy aspects of the proposed rule. All comments submitted will be available, both before and after the closing date for comments, in the Rules Docket for examination by interested persons. A report summarizing each FAA/public contact, concerned with the substance of this proposal, will be filed in the Rules Docket.

Commenters wishing the FAA to acknowledge receipt of their comments submitted in response to this Notice must submit a self-addressed, stamped post card on which the following statement is made: "Comments to Docket Number 90–NM–89–AD." The post card will be date/time stamped and returned to the commenter.

Discussion

Arkwin Industries Incorporated, manufacturer of the Boeing Model 757 ram air turbine (RAT) deployment actuator, reported that during acceptance testing of a production unit, the unit failed to unlock after several successful unlocks. Upon inspection, it was determined that a plug had separated from the latch subassembly due to inadequate staking. This plug,

which should retain the latch pin, allowed the pin to migrate during actuator cycling and consequently prevented the actuator from unlocking. The failed actuator is part of a lot of 73 actuator assemblies manufactured using a new staking tool. Arkwin has since replaced ball staking of the plug with welding, using an electron beam process. Failure of the latch assembly to release the RAT could result in the loss of all hydraulic power in the case of dual engine failure.

The FAA has reviewed and approved Arkwin Industries Incorporated Service Bulletin 1211233-29-02, dated July 25, 1989, which provides instructions for the removal of the defective RAT deployment actuator latch subassembly, installation of a modified latch subassembly, and functional testing.

Since this condition is likely to exist or develop on other airplanes of this same type design, an AD is proposed which would require replacement of the existing RAT deployment actuator latch subassemblies with the modified subassemblies, in accordance with the service bulletin described above.

There are approximately 73 Boeing Model 757 series airplanes of the affected design in the worldwide fleet. It is estimated that 73 airplanes of U.S. registry would be affected by this AD, that it would take approximately nine manhours per airplane to accomplish the required actions, and that the average labor cost would be $40 per manhour. The manufacturer of the actuator will modify the units at no cost for required parts. Based on these figures, the total cost impact of the AD on U.S. operators is estimated to be $26,280.

The regulations proposed herein would not have substantial direct effects on the States, on the relationship between the national government and the States, or on the distribution of power and responsibilities among the various levels of government. Therefore, in accordance with Executive Order 12612, it is determined that this proposal would not have sufficient ferderalism implications to warrant the preparation of a Federalism Assessment.

For the reasons discussed above, I certify that this proposed regulation (1) Is not a "major rule" under Executive Order 12291; (2) is not a "significant rule" under DOT Regulatory Policies and Procedures (44 FR 11034, February 26, 1979); and (3) if promulgated, will not have a significant economic impact, positive or negative, on a substantial number of small entities under the criteria of the Regulatory Flexibility Act. A copy of the draft evaluation prepared for this action is contained in the regulatory docket. A copy of it may be obtained from the Rules Docket.

List of Subjects in 14 CFR Part 39

Air transportation, Aircraft, Aviation safety, Safety.

The Proposed Amendment

Accordingly, pursuant to the authority delegated to me by the Administrator, the Federal Aviation Administration proposes to amend 14 CFR part 39 of the Federal Aviation Regulations as follows:

PART 39—[AMENDED]

1. The authority citation for part 39 continues to read as follows:

Authority: 49 U.S.C. 1354(a), 1421 and 1423; 49 U.S.C. 106(g) (Revised Pub. L. 97-449, January 12, 1983); and 14 CFR 11.89.

§ 39.13 [Amended]

2. Section 39.13 is amended by adding the following new airworthiness directive.

Boeing: Applies to Model 757 series airplanes, equipped with Arkwin Industries Incorporated P/N 1211233-005 ram air turbine deployment actuators with serial numbers 213 through 285, certificated in any category.

Compliance is required within the next 3,000 hours time-in-service after the effective date of this AD, unless previously accomplished.

To prevent loss of hydraulic power due to failure of the ram air turbine to deploy in the event of dual engine failure, accomplish the following:

A. Replace the ram air turbine deployment actuator in accordance with Arkwin Industries Incorporated Service Bulletin 1211233-29-02, dated July 25, 1989.

B. An alternate means of compliance or adjustment of the compliance time which provides an acceptable level of safety, may be used when approved by the Manager, Seattle Aircraft Certification Office, FAA, Northwest Mountain Region.

Note: The request should be forwarded through an FAA Principal Maintenance Inspector (PMI), who will either concur or comment, and then send it to the Manager, Seattle Aircraft Certification Office.

C. Special flight permits may be issued in accordance with FAR 21.197 and 21.199 to operate airplanes to a base in order to comply with the requirements of this AD.

All persons affected by this directive who have not already received the appropriate service documents from the manufacturer may obtain copies upon request to Boeing Commercial Airplanes, P.O. Box 3707, Seattle, Washington 98124; or Arkwin Industries Incorporated, 686 Main Street, Westbury, New York 11590. These documents may be examined at the FAA, Northwest Mountain Region, Transport Airplane Directorate, 17900 Pacific Highway South, Seattle, Washington, or at the Seattle Aircraft Certification Office, 9010 East Marginal Way South, Seattle, Washington.

Issued in Seattle, Washington, on May 30, 1990.

Darrell M. Pederson,

Acting Manager, Transport Airplane Directorate, Aircraft Certification Service.

[FR Doc. 90-13176 Filed 6-6-90; 8:45 am]

BILLING CODE 4910-13-M

---

14 CFR Part 39

[Docket No. 71-CE-7-AD]

Airworthiness Directives; Cessna TU206, TP206, T207, and T210 Series Airplanes

AGENCY: Federal Aviation Administration (FAA), DOT.

ACTION: Withdrawal of a notice of proposed rulemaking (NPRM).

SUMMARY: This action withdraws an NPRM which proposed to amend Airworthiness Directive (AD) 71-09-07R1, applicable to certain Cessna TU206, TP206, T207, T210 through T210N Series airplanes, by providing a means to adjust the repetitive inspection intervals and pressure tests of the exhaust manifold and cabin heat exchanger for those airplanes covered by an FAA approved continuous inspection program. On the basis of a comment received in response to the draft Final Rule it has been determined that the NPRM should be withdrawn. Alternate courses of action have been studied and found already addressed in the current AD. Therefore, provisions for adjusting the repetitive inspection intervals for these airplanes on an individual basis are available in the existing AD and the FAA is withdrawing the NPRM.

FOR FURTHER INFORMATION CONTACT: Mr. Victor W. Powell, Wichita Aircraft Certification Office, 1801 Airport Road, room 100, Mid-Continent Airport, Wichita, Kansas 67209; Telephone (316) 946-4440.

Background

On May 25, 1989, a Notice of Proposed Rulemaking (NPRM) was published in the Federal Register (54 FR 100) applicable to certain Cessna TU206, TP206, T207, and T210 series airplanes, proposing the adjustment of the repetitive inspection intervals for those airplanes covered by an FAA approved inspection program. This proposal was based on past AD inspection evaluations where the repetitive inspection intervals were adjusted on an

individual basis for those operators following an FAA approved inspection program without adversely affecting safety. The comment period opened on May 25, 1989, and closed on June 26, 1989.

The FAA received one comment to this proposed rule after the close of the comment period. The comment was negative and composed of the following complaints:

(1) Such allowances in inspection adjustments confuse the reader about the maximum safe inspection interval. It is unclear whether the maximum safe interval for the inspection is 50 hours or 70 hours time-in-service.

(2) Current procedures only allow for adjustments of the repetitive inspection intervals if:

(a) The AD includes a paragraph allowing for approval of adjustments of the repetitive inspection intervals;

(b) The operator submits substantiating data to support his request for adjustments to the cognizant FAA maintenance inspector; and

(c) The manager of the cognizant Aircraft Certification Office approves the request upon recommendation of the FAA maintenance inspector.

Furthermore, if an AD does not allow for approval of adjustments of the repetitive inspection intervals, then formal exemption procedures must be followed when a request for adjustment is received.

The FAA agrees that the current AD 71-09-07R1 allows for individual approval of the repetitive inspection interval under paragraph (b) which states, "An equivalent means of compliance with this AD may be used if approved by the Manager, Wichita Aircraft Certification Office, FAA, 1801 Airport Road, room 100, Mid-Continent Airport, Wichita, Kansas 67209."

From the comment received the FAA recognizes that the issue of set inspection time intervals as stated in an Airworthiness Directive should be limited to one recognizably determined inspection time interval with any exemption and/or changes to be reviewed on an individual basis with each operator, rather than have one time interval for one group of operators and another interval for a different group.

In view of the comment to this NPRM, and with alternative action already provided by the current AD 71-09-07R1, the FAA has determined that this proposed Airworthiness Directive should not be issued.

NPRM Docket 71-CE-7-AD is hereby withdrawn. This action is pursuant to section 11.85 of part 11 of the Federal Aviation Regulations (14 CFR part 11).

Issued in Kansas City, Missouri, on May 30, 1990.

Barry D. Clements,

Manager, Small Airplane Directorate, Aircraft Certification Service.

[FR Doc. 90-13178 Filed 6-6-90; 8:45 am]

BILLING CODE 4910-13-M

---

14 CFR Part 39

[Docket No. 90-CE-21-AD]

Airworthiness Directives, All Piper Model Airplanes Equipped With Wing Lift Struts

AGENCY: Federal Aviation Administration (FAA), DOT.

ACTION: Notice of proposed rulemaking (NPRM).

SUMMARY: This notice proposes to adopt a new Airworthiness Directive (AD), applicable to all Piper airplanes incorporating wing lift struts, which will supersede AD 77-03-08. This proposal would require inspections, corrosion prevention, and on certain models, replacement of the lift struts. There have been reports of inflight wing separation due to corrosion of the wing lift struts. This action will preclude the loss of wing structural integrity.

DATES: Comments must be received on or before July 30, 1990.

ADDRESSES: Piper Service Bulletin (SB) 910A, dated October 10, 1989, and SB 528C, dated October 11, 1989, applicable to this AD, may be obtained from the Piper Aircraft Corporation, 2926 Piper Drive, Vero Beach, Florida; Telephone (407) 567-4361. This information also may be examined at the Rules Docket at the address below. Send comments on the proposal in triplicate to the FAA, Central Region, Office of the Assistant Chief Counsel, Attention: Rules Docket No. 90-CE-21-AD, room 1558, 601 E. 12th Street, Kansas City, Missouri 64106. Comments may be inspected at this location between 8 a.m. and 4 p.m., Monday through Friday, holidays excepted.

FOR FURTHER INFORMATION CONTACT: Mr. Charles L. Perry, Aerospace Engineer, Airframe Branch, Atlanta Aircraft Certification Office, 1669 Phoenix Parkway, suite 210C, Atlanta, Georgia 30349; Telephone (404) 991-2910.

SUPPLEMENTARY INFORMATION:

Comments Invited

Interested persons are invited to participate in the making of the proposed rule by submitting such written data, views, or arguments as they may desire. Communications should identify the regulatory docket or notice number and be submitted in triplicate to the address specified above. All communications received on or before the closing date for comments specified above will be considered before taking action on the proposed rule. The proposals contained in this notice may be changed in light of the comments received. Comments are specifically invited on the overall regulatory, economic, environmental, and energy aspects of the proposed rule. All comments submitted will be available, both before and after the closing date for comments, in the Rules Docket for examination by interested persons. A report summarizing each FAA-public contact, concerned with the substance of this proposal, will be filed in the Rules Docket.

Availability of NPRMs

Any person may obtain a copy of this NPRM by submitting a request to the FAA, Central Region, Office of the Assistant Chief Counsel, Attention: Rules Docket No. 90-CE-21-AD, Room 1558, 601 E. 12th Street, Kansas City, Missouri 64106.

Discussion

Piper initially alerted owners/operators of certain Piper airplanes equipped with lift struts to the possibility of corrosion in the struts through Piper SB 528, issued October 28, 1976. This SB, and its later revisions, called for a one-time application of internal corrosion impedance treatment and 5-year repetitive inspections. The FAA issued AD 77-03-08 to mandate the requirements of the SB.

A Piper Model PA-18 airplane experienced an in-flight separation of the left wing near Jacksonville, Arkansas, on February 25, 1989. On August 29, 1989, an in-flight separation of the right wing occurred on a Piper Model PA 22 airplane at Moose Lake, Minnesota. The investigation results of both of these accidents revealed that separation of the lift struts was caused by internal corrosion. Logbook entries for both airplanes indicated compliance with the requirements of AD 77-03-08. A review of available service information revealed 24 reports of internal corrosion involving wing lift struts on various Piper airplanes. The FAA has also determined that the one-time internal application of the oil required by AD 77-03-08 is not adequate to ensure continued corrosion protection as evidenced by the failure of the lift strut on one airplane that had documented compliance with AD 77-03-08, but displayed an absence of preservative

oil. Since the condition described is likely to exist or develop in other Piper airplanes incorporating wing lift struts of the same type design, the proposed AD would supersede AD 77-03-08 and would require initial and repetitive inspections, as well as corrosion prevention on all affected Piper airplanes. On Piper models PA-18 and PA-19 airplanes, the proposed AD would mandate replacement of the wing lift struts with a new moisture-sealed strut. Further rulemaking will be initiated concerning the moisture-sealed wing lift struts for the remaining models when the redesign is completed and the parts become available. The FAA has determined there are approximately 20,000 airplanes affected by the proposed AD. The cost of inspecting these airplanes as required by the proposed AD is estimated to be $240.00 per airplane for each inspection. The cost of replacement of struts is $760.00 per airplane. Accordingly, the total fleet cost for a one-time inspection and subsequent replacement of the wing lift struts is estimated to be $20,000,000. The exact cost to the fleet cannot be accurately determined because of the many potential combinations of inspections and strut replacements. The availability of new sealed replacement struts will have a major impact on how many inspections will be required to be performed prior to installation of the new struts. For example, if all owners cannot obtain a replacement strut and two inspections are needed as an interim action prior to the installation of new struts, then the entire fleet cost could be $24,800,000. The cost of compliance with the proposed AD is so small that it would be necessary that a small entity own five or more of the affected airplanes for there to be a significant financial impact on these entities. Few, if any, small entities own this many of the affected airplanes.

The regulations proposed herein would not have substantial direct effects on the states, on the relationship between the national government and the states, or on the distribution of power and responsibilities among the various levels of government. Therefore, in accordance with Executive Order 12612, it is determined that this proposal would not have sufficient federalism implications to warrant the preparation of a Federalism Assessment.

Therefore, I certify that this action (1) Is not a "major rule" under the provisions of Executive Order 12291; (2) is not a "significant rule" under DOT Regulatory Policies and Procedures (44 FR 11034, February 26, 1979); and (3) if promulgated, will not have a significant economic impact, positive or negative, on a substantial number of small entities under the criteria of the Regulatory Flexibility Act. A copy of the draft regulatory evaluation prepared for this action has been placed in the public docket. A copy of it may be obtained by contacting the Rules Docket at the location provided under the caption **"ADDRESSES"**.

List of Subjects in 14 CFR Part 39

Air transportation, Aircraft, Aviation safety, Safety

The Proposed Amendment

Accordingly, pursuant to the authority delegated to me by the Administrator, the Federal Aviation Administration proposes to amend part 39 of the Federal Aviation Regulations (14 CFR 39.13) as follows:

PART 39—[AMENDED]

1. The authority citation for part 39 continues to read as follows:

Authority: 49 U.S.C. 1354(a), 1421 and 1423; 49 U.S.C. 106(g) (Revised Pub. L. 97-449, January 12, 1983); and 14 CFR 11.89.

§ 39.13 [Amended]

2. Section 39.13 is amended by superseding AD 77-03-08, Amendment 39-2833 with the following new AD:

Piper: Applies to the following airplanes certificated in any category.

Models affected	Serial numbers affected
J-2 Series, Cub	All.
J-3, NE-1, L-4 Cub	All
J-4 Series Coupe	All.
J-5, J-5C, L-14, AE-1, HE-1, Series Cub Cruiser.	5-1 through 5-1389.
PA-11 Series, Cub Special	11-1 through 11-1678.
PA-12 Series, Super Cruiser	12-1 through 12-4036.
PA-14 Series, Family Cruiser	14-1 through 14-523.
PA-15 Vagabond	15-1 through 15-388.
PA-16 Clipper	16-1 through 16-736.
PA-17 Vagabond	17-1 through 17-215.
PA-20 Series, (Pacer)	20-1 through 20-1121.
PA-22 Series (Tri-Pacer/Colt)	22-1 through 22-9848.
PA-25 Series, (Pawnee)	25-1 through 25-8156024.
PA-18/18A Series (Super Cub)	18-1 through 18-8309025, 1809001 through 1809032, 1809034 through 1809040.
PA-19 (Super Cub)	19-1, 19-2 and 19-3.

Compliance: Required as indicated unless already accomplished. To preclude failure of the wing lift strut and resulting loss of wing structural integrity, accomplish the following:

(a) For models J-2 Series (Cub); J-3, NE-1, L-4 (Cub); J-4 Series (Coupe); J-5, J-5C, L-14, AE-1, HE-1, Series (Cub Cruiser); PA-11 Series (Cub Special); PA-12 Series, (Super Cruiser); PA-14 Series (Family Cruiser); PA-15 (Vagabond); PA-16 (Clipper); PA-17 (Vagabond); PA-20 Series (Pacer); PA-22 Series (Tri-Pacer/Colt); and PA-25-Series (Pawnee) airplanes: within the next 30 calendar days after the effective date of this AD and thereafter at intervals not to exceed 12 calendar months, inspect the wing lift struts for corrosion in accordance with the Instructions Section of Piper Service Bulletin (SB) 528C, dated October 11, 1989. If evidence of corrosion is found prior to further flight repair or replace the affected strut in accordance with the criteria in the above referenced SB.

(b) For models PA-18/18A Series (Super Cub) and PA-19 (Super Cub) airplanes:

(1) Within the next 30 calendar days after the effective date of this AD, and again within 12 calendar months after the initial inspection, inspect the wing lift struts for corrosion in accordance with the Instructions Section of Part I, Piper SB 910A, dated October 10, 1989. If evidence of corrosion is found, prior to further flight repair or replace the affected strut in accordance with the criteria in the above referenced SB.

(2) Within the next 24 calendar months after the effective date of this AD, modify the airplane by the installation of sealed wing lift struts as specified in part II of the above referenced SB. The inspections required by paragraph (b)(1) of this AD are not required when the airplane has been modified with sealed wing lift struts.

(c) Airplanes may be flown in accordance with FAR 21.197 to a location where this AD may be accomplished.

(d) An alternate method of compliance or adjustment of the initial or repetitive inspection compliance times which provides an equivalent level of safety may be approved by the Manager, Atlanta Aircraft Certification Office, 1669 Phoenix Parkway, suite 210C, Atlanta, Georgia 30349.

Note: The request should be forwarded through an FAA Maintenance Inspector, who may add comments and then send it to the Manager, Atlanta Aircraft Certification Office.

All persons affected by this directive may obtain copies of the documents referred to herein upon request to Piper Aircraft Corporation, 2926 Piper Drive, Vero Beach, Florida; or may examine these documents at the FAA, Central Region, Office of the Assistant Chief Counsel, room 1558, 601 E. 12th Street, Kansas City, Missouri 64106.

This Amendment supersedes AD 77-03-08, Amendment 39-2833.

Issued in Kansas City, Missouri, on May 29, 1990.

Barry D. Clements,

Manager, Small Airplane Directorate, Aircraft Certification Service.

[FR Doc. 90-13177 Filed 6-6-90; 8:45 am]

BILLING CODE 4910-13-M

---

14 CFR Part 71

[Airspace Docket No. 90-ASW-16]

Proposed Removal of Transition Area; Blytheville, AR

AGENCY: Federal Aviation Administration (FAA), DOT.

ACTION: Withdrawal of notice of proposed rulemaking.

SUMMARY: This action withdraws a Notice of Proposed Rulemaking (NPRM). The NPRM proposed to remove the transition area located at Blytheville, AR, based on the fact that the only standard instrument approach procedure (SIAP) serving the Blytheville Municipal Airport was being canceled. A new SIAP to the Blytheville Municipal Airport is currently under development, thus negating the need to remove the existing transition area.

DATES: This withdrawal of proposed rulemaking is effective June 7, 1990.

FOR FURTHER INFORMATION CONTACT: Bruce C. Beard, System Management Branch, Department of Transportation, Federal Aviation Administration, Fort Worth, TX 76193-0530; telephone: (817) 624-5561.

The Proposal

On April 17, 1990, NPRM Airspace Docket No. 90-ASW-16 was published in the Federal Register to remove the transition area located at Blytheville, AR (55 FR 14294). The need for the proposed NPRM was based on the fact that the only SIAP serving the Blytheville Municipal Airport was being canceled, thus negating the need for a 700-foot transition area. The reason for the cancellation of the NDB-A SIAP was the relocation of the Hicks Nondirectional Radio Beacon (NDB). However, a new NDB SIAP is being developed using the Hicks NDB in its new location. Since a new SIAP will be developed, the current transition area should not be removed.

List of Subjects in 14 CFR Part 71

Aviation safety, Transition areas.

The withdrawal

Accordingly, pursuant to the authority delegated to me, the NPRM Airspace Docket No. 90-ASW-16, as published in the Federal Register on April 17, 1990 (55 FR 14294), is hereby withdrawn.

Authority: 49 U.S.C. 1348(a), 1354(a), 1510; Executive Order 10854; 49 U.S.C. 106(g) (Revised Pub. L. 97-449, January 12, 1983); 14 CFR 11.69.

Issued in Fort Worth, TX, on May 21, 1990.

Larry L. Craig,

Manager, Air Traffic Division, Southwest Region.

[FR Doc. 90-13180 Filed 6-6-90; 8:45 am]

BILLING CODE 4910-13-M

---

14 CFR Part 71

[Airspace Docket No. 90-ASW-25]

Proposed Revision of Control Zones, McAlester, OK, and Tulsa International Airport, OK

AGENCY: Federal Aviation Administration (FAA), DOT.

ACTION: Notice of proposed rulemaking.

SUMMARY: This notice proposes to revise the legal descriptions of the McAlester and Tulsa International Airport, OK, Control Zones. This amendment is necessary in order to provide proper steps for informing the users when the control zones would not be in effect if 24-hour radio communications or 24-hour weather reporting capability were temporarily lost. The intended effect of this proposal is to provide the users of the McAlester Regional and the Tulsa International Airports of the rare occasions when the respective control zones would not be in effect.

DATES: Comments must be received on or before July 23, 1990.

ADDRESSES: Send comments on the proposal in triplicate to: Manager, System Management Branch, Air Traffic Division, Southwest Region, Docket No. 90-ASW-25, Department of Transportation, Federal Aviation Administration, Fort Worth, TX 76193-0530.

The official docket may be examined in the office of the Assistant Chief Counsel, Southwest Region, Federal Aviation Administration, 4400 Blue Mound Road, Fort Worth, TX.

FOR FURTHER INFORMATION CONTACT: Bruce C. Beard, System Management Branch, Department of Transportation, Federal Aviation Administration, Fort Worth, TX 76193-0530; telephone: (817) 624-5561.

SUPPLEMENTARY INFORMATION:

Comments Invited

Interested parties are invited to participate in this proposed rulemaking by submitting such written data, views, or arguments as they may desire. Comments that provide the factual basis supporting the views and suggestions presented are particularly helpful in developing reasoned regulatory decisions on the proposal. Comments are specifically invited on the overall regulatory, economic, environmental, and energy aspects of the proposal. Communications should identify the airspace docket and be submitted in triplicate to the address listed above. Commenters wishing the FAA to acknowledge receipt of their comments on this notice must submit with those comments a self-addressed, stamped postcard on which the following statement is made: "Comments to Airspace Docket No. 90-ASW-25." The postcard will be date/time stamped and returned to the commenter. All communications received before the specified closing date for comments will be considered before taking action on the proposed rule. The proposal contained in this notice may be changed in the light of comments received.

All comments submitted will be available for examination in the Office of the Assistant Chief Counsel, 4400 Blue Mound Road, Fort Worth, TX, both before and after the closing date for comments. A report summarizing each substantive public contact with FAA personnel concerned with this rulemaking will be filed in the docket.

Availability of NPRM'S

Any person may obtain a copy of this notice of proposed rulemaking (NPRM) by submitting a request to the Manager, System Management Branch, Department of Transportation, Federal Aviation Administration, Fort Worth, TX 76193-0530. Communications must identify the notice number of this NPRM. Persons interested in being placed on a mailing list for future NPRM's should also request a copy of Advisory Circular No. 11-2A which describes the application procedure.

The Proposal

The FAA is considering an amendment to § 71.171 of the Federal Aviation Regulations (14 CFR part 71) to revise the McAlester and Tulsa International Airport, OK, Control Zones. This amendment is necessary so proper steps can be taken in order to inform the users when the control zone would not be in effect if 24-hour radio communications or 24-hour weather reporting capability were temporarily lost. The intended effect of this proposal is to provide the users of the McAlester Regional and Tulsa International Airports of the rare occasions when the respective control zones would not be in

effect. This would be an editorial change only, there would be no reduction in service currently being provided at these two airports. Section 71.171 of part 71 of the Federal Aviation Regulations was republished in Handbook 7400.6F dated January 2, 1990.

The FAA has determined that this proposed regulation only involves an established body of technical regulations for which frequent and routine amendments are necessary to keep them operationally current. It, therefore—(1) Is not a "major rule" under Executive Order 12291; (2) is not a "significant rule" under DOT Regulatory Policies and Procedures (44 FR 11034; February 26, 1979); and (3) does not warrant preparation of a regulatory evaluation as the anticipated impact is so minimal. Since this is a routine matter that will only affect air traffic procedures and air navigation, it is certified that this rule, when promulgated, will not have a significant impact on a substantial number of small entities under the criteria of the Regulatory Flexibility Act.

List of Subjects In 14 CFR Part 71

Aviation safety, Control zones.

The Proposed Amendment

Accordingly, pursuant to the authority delegated to me, the FAA proposes to amend part 71 of the Federal Aviation Regulations (14 CFR part 71) as follows:

PART 71—DESIGNATION OF FEDERAL AIRWAYS, AREA LOW ROUTES, CONTROLLED AIRSPACE, AND REPORTING POINTS

1. The authority citation for part 71 continues to read as follows:

Authority: 49 U.S.C. 1348(a), 1354(a), 1510; Executive Order 10854; 49 U.S.C. 106(g) (Revised Pub. L. 97-449, January 12, 1983); 14 CFR 11.69.

§ 71.171 [Amended]

2. Section 71.171 is amended as follows:

McAlester, OK [Amended]

By adding to the end of the legal description: "This control zone is effective during the specific dates and times established in advance by a Notice to Airmen. The effective days and times will thereafter be continuously published in the Airport/Facility Directory."

3. Section 71.171 is amended as follows:

Tulsa International Airport, OK [Amended]

By adding to the end of the legal description: "This control zone is effective during the specific dates and times established in advance by a Notice to Airmen. The effective days and times will thereafter be continuously published in the Airport/Facility Directory."

Issued in Fort Worth, TX on May 21, 1990.

Larry L. Craig,

Manager, Air Traffic Division, Southwest Region.

[FR Doc. 90-13179 Filed 6-6-90; 8:45 am]

BILLING CODE 4910-13-M

---

14 CFR Parts 71 and 75

[Airspace Docket No. 90-AWA-7]

Proposed Alteration of VOR Federal Airways and Jet Routes

AGENCY: Federal Aviation Administration (FAA), DOT.

ACTION: Notice of proposed rulemaking.

SUMMARY: This notice proposes to alter the descriptions of several VOR Federal airways and jet routes located in the northeast portion of the United States which lead into or originate from the Kleinburg, Ontario, Canada, very high frequency omnidirectional radio range and tactical air navigational aid (VORTAC). These airway and jet route changes are the result of the decommissioning of the Kleinburg VORTAC and the commissioning of the Sunde, Ontario, Canada, very high frequency omnidirectional radio range (VOR) by Transport Canada.

DATES: Comments must be received on or before July 19, 1990.

ADDRESSES: Send comments on the proposal in triplicate to: Manager, Air Traffic Division, AEA-500, Docket No. 90-AWA-7, Federal Aviation Administration, JFK International Airport, The Fitzgerald Federal Building, Jamaica, NY 11430.

The official docket may be examined in the Rules Docket, weekdays, except Federal holidays, between 8:30 a.m. and 5 p.m. The FAA Rules Docket is located in the Office of the Chief Counsel, room 916, 800 Independence Avenue, SW., Washington, DC

An informal docket may also be examined during normal business hours at the office of the Regional Air Traffic Division.

FOR FURTHER INFORMATION CONTACT: Jesse B. Bogan, Jr., Airspace and Obstruction Evaluation Branch (ATP-240), Airspace-Rules and Aeronautical Information Division, Air Traffic Rules and Procedures Service, Federal Aviation Administration, 800 Independence Avenue, SW., Washington, DC 20591; telephone: (202) 267-9253.

SUPPLEMENTARY INFORMATION:

Comments Invited

Interested parties are invited to participate in this proposed rulemaking by submitting such written data, views, or arguments as they may desire. Comments that provide the factual basis supporting the views and suggestions presented are particularly helpful in developing reasoned regulatory decisions on the proposal. Comments are specifically invited on the overall regulatory, aeronautical, economic, environmental, and energy aspects of the proposal. Communications should identify the airspace docket and be submitted in triplicate to the address listed above. Commenters wishing the FAA to acknowledge receipt of their comments on this notice must submit with those comments a self-addressed, stamped postcard on which the following statement is made: "Comments to Airspace Docket No. 90-AWA-7." The postcard will be date/time stamped and returned to the commenter. All communications received before the specified closing date for comments will be considered before taking action on the proposed rule. The proposal contained in this notice may be changed in the light of comments received. All comments submitted will be available for examination in the Rules Docket both before and after the closing date for comments. A report summarizing each substantive public contact with FAA personnel concerned with this rulemaking will be filed in the docket.

Availability of NPRM's

Any person may obtain a copy of this Notice of Proposed Rulemaking (NPRM) by submitting a request to the Federal Aviation Administration, Office of Public Affairs, Attention: Public Inquiry Center, APA-230, 800 Independence Avenue, SW., Washington, DC 20591, or by calling (202) 267-3484. Communications must identify the notice number of this NPRM. Persons interested in being placed on a mailing list for future NPRM's should also request a copy of Advisory Circular No. 11-2A which describes the application procedure.

The Proposal

The FAA is considering amendments to parts 71 and 75 of the Federal Aviation Regulations (14 CFR parts 71 and 75) to realign VOR Federal Airways V-164 and V-252; and to realign Jet Routes J-53, J-95, J-522, J-531, and J-546 which lead into or originate from the Kleinburg, Ontario, Canada, VORTAC.

The changes are the result of the decommissioning of the Kleinburg VORTAC and the commissioning of the Sunde, Ontario, Canada, VOR by Transport Canada. Sections 71.123 and 75.100 of parts 71 and 75 of the Federal Aviation Regulations were republished in Handbook 7400.6F dated January 2, 1990.

The FAA has determined that this proposed regulation only involves an established body of technical regulations for which frequent and routine amendments are necessary to keep them operationally current. It, therefore—(1) Is not a "major rule" under Executive Order 12291; (2) is not a "significant rule" under DOT Regulatory Policies and Procedures (44 FR 11034; February 26, 1979); and (3) does not warrant preparation of a regulatory evaluation as the anticipated impact is so minimal. Since this is a routine matter that will only affect air traffic procedures and air navigation, it is certified that this rule, when promulgated, will not have a significant economic impact on a substantial number of small entities under the criteria of the Regulatory Flexibility Act.

List of Subjects in 14 CFR Parts 71 and 75

Aviation safety, VOR federal airways, Jet routes.

The Proposed Amendments

Accordingly, pursuant to the authority delegated to me, the Federal Aviation Administration proposes to amend parts 71 and 75 of the Federal Aviation Regulations (14 CFR parts 71 and 75) as follows:

PART 71—DESIGNATION OF FEDERAL AIRWAYS, AREA LOW ROUTES, CONTROLLED AIRSPACE, AND REPORTING POINTS

1. The authority citation for part 71 continues to read as follows:

Authority: 49 U.S.C. 1348(a), 1354(a), 1510; Executive Order 10854; 49 U.S.C. 106(g) (Revised Pub. L. 97–449, January 12, 1983); 14 CFR 11.69.

§ 71.123 [Amended]

2. Section 71.123 is amended as follows:

V–164 [Amended]

By removing the words "From Kleinburg, ON, Canada, INT Kleinburg 133° and Buffalo, NY, 338° radials;" and substituting the words "From Toronto, ON, Canada; via INT Toronto 116°T(125°M) and Buffalo, NY, 338°T(346°M) radials;"

V–252 [Amended]

By removing the words "From Kleinburg, ON, Canada; INT Kleinburg 133° and Geneseo, NY, 305° radials;" and substituting the words "From Toronto, ON, Canada; via INT Toronto 116°T(125°M) and Geneseo, NY, 305°T(314°M) radials;"

PART 75—ESTABLISHMENT OF JET ROUTES AND AREA HIGH ROUTES

3. The authority citation for part 75 continues to read as follows:

Authority: 49 U.S.C. 1348(a), 1354(a), 1510; Executive Order 10854; 49 U.S.C. 106(g) (Revised Pub. L. 97–449, January 12, 1983); 14 CFR 11.69.

§ 75.100 [Amended]

4. Section 75.100 is amended as follows:

J–53 [Amended]

By removing the words "Ellwood City; to Kleinburg, ON, Canada. The portion within Canada is excluded." and substituting the words "to Ellwood City."

J–95 [Amended]

By removing the words "to Kleinburg, ON, Canada, excluding the portion which lies over Canadian territory." and substituting the words "to Toronto, ON, Canada. The portion within Canada is excluded."

J–522 [Amended]

By removing the words "Kleinburg, ON, Canada;" and substituting the words "Toronto, ON, Canada;"

J–531 [Amended]

By removing the words "via Kleinburg, ON, Canada;" and substituting the words "via Toronto, ON, Canada;"

J–546 [Revised]

From Peck, MI; to Sunde, ON, Canada The portion within Canada is excluded.

Issued in Washington, DC, on May 30, 1990.

Richard Huff,

Acting Manager, Airspace-Rules and Aeronautical Information Division.

[FR Doc. 90–13181 Filed 6–6–90; 8:45 am]

BILLING CODE 4910–13–M

DEPARTMENT OF HEALTH AND HUMAN SERVICES

Food and Drug Administration

21 CFR Parts 333, 334, 335, 341, 344, 347, 348, 350, 355, 356, 357, and 358

[Docket No. 89N–0525]

RIN 0905–AA06

Status of Certain Over-the-Counter Drug Category II and III Ingredients; Correction

AGENCY: Food and Drug Administration, HHS.

ACTION: Notice of proposed rulemaking; correction.

SUMMARY: The Food and Drug Administration (FDA) is correcting the proposed rule regarding the status of certain over-the-counter (OTC) drug Category II and III ingredients. The proposed rule refers to the status of allantoin and zinc acetate as Category III skin protectants in general; however, the Category III classification should apply only to the use of these ingredients as a wound healing agent. In the **Federal Register** of February 15, 1983 (48 FR 6820), FDA published a tentative final monograph for OTC skin protectant drug products. In that proposal, allantoin and zinc acetate were classified in Category I for use as a skin protectant, but classified in Category III for use as a wound healing agent (48 FR 6820 at 6831). In the **Federal Register** of May 16, 1990 (55 FR 20434), FDA issued a notice of proposed rulemaking stating that certain ingredients in OTC drug products are not generally recognized as safe and effective or are misbranded. In Table II (55 FR 20434 at 20437), the ingredients allantoin and zinc acetate were classified as Category III under "Skin protectant drug products." This document corrects that oversight.

FOR FURTHER INFORMATION CONTACT: William E. Gilbertson, Center for Drug Evaluation and Research (HFD–210), Food and Drug Administration, 5600 Fishers Lane, Rockville, MD 20857, 301–295–8000.

In FR Doc. 90–11357, appearing at page 20434 in the **Federal Register** of Wednesday, May 16, 1990, the following corrections are made: On page 20437, in the third column, under "Table II. Ingredients Covered by this Notice—Continued", entry "(19)", a footnote "[1]" is added after "Allantoin" and "Zinc acetate". At the end of Table II, a footnote "[1]" is added to read "[1]" Wound healing use."

Dated: May 31, 1990.

Alan L. Hoeting,

Acting Associate Commissioner for Regulatory Affairs.

[FR Doc. 90–13207 Filed 6–6–90; 8:45 am]

BILLING CODE 4160–01–M

DEPARTMENT OF THE TREASURY

Internal Revenue Service

26 CFR Part 1

[IA–258–84]

RIN 1545–AH32

Economic Performance Requirement

AGENCY: Internal Revenue Service, Treasury.

ACTION: Notice of proposed rulemaking.

SUMMARY: This document contains proposed regulations relating to the requirement that economic performance occur in order for an amount to be incurred by a taxpayer using an accrual method of accounting. Changes to the applicable law were made by the Tax Reform Act of 1984. The regulations affect all taxpayers that use an accrual method of accounting, and are necessary to provide them with guidance needed to comply with these changes.

DATES: Written comments and requests for a public hearing must be delivered by August 6, 1990.

ADDRESSES: Send comments and requests for a public hearing to: Internal Revenue Service, Office of Chief Counsel, Attn: CC:CORP:T:R (IA-258-84), P.O. Box 7604, Ben Franklin Station, Washington, DC 20044.

FOR FURTHER INFORMATION CONTACT: William L. Blagg of the Office of Chief Counsel, Internal Revenue Service, (202) 566-3803 (not a toll-free call).

SUPPLEMENTARY INFORMATION:

Background

This document contains proposed amendments to the Income Tax Regulations (26 CFR part 1) to provide rules under section 461(h) of the Internal Revenue Code of 1986 (Code). Section 461(h) was added to the Code by section 91(a) of the Tax Reform Act of 1984 (Pub. L. 98-369, 98 Stat. 598).

Explanation of Statutory Provisions

Section 461(h) adds a third requirement to the "all events test" for determining the taxable year in which an item may be treated as incurred by a taxpayer using an accrual method of accounting. As in effect before the enactment of section 461(h), the all events test was satisfied when (1) all the events occurred that determined the fact of a liability and (2) the amount of the liability could be determined with reasonable accuracy. Section 461(h) provides that the all events test shall not be treated as met any earlier than the taxable year in which "economic performance" occurs with respect to the liability. Section 461(h) applies to any item allowable as a cost, expense, or deduction, except for certain items for which the Code provides alternative timing rules.

Section 461(h)(2) provides that, except as otherwise provided in regulations prescribed by the Secretary, the following general principles determine when economic performance occurs. If the liability of a taxpayer arises out of the provision of property or services to the taxpayer by another person, economic performance occurs as the property or services are provided. If the liability of a taxpayer arises out of the use of property by the taxpayer, economic performance occurs as the taxpayer uses such property. If the liability of a taxpayer requires the taxpayer to provide property or services, economic performance occurs as the taxpayer provides the property or services. If the liability of a taxpayer requires payment to another person and arises under a workers' compensation act or arises out of any tort, economic performance occurs as the payments to such person are made. Finally, in the case of any other liability of a taxpayer, economic performance occurs at the time determined under regulations prescribed by the Secretary.

Although section 461(h) generally requires economic performance to occur before an item may be treated as incurred, section 461(h)(3) provides an exception to this general rule ("the recurring item exception"). Under the recurring item exception, an item may be treated as incurred in the taxable year before economic performance occurs, but only if the following four conditons are satisfied. First, the all events test, without regard to economic performance, must be satisfied with respect to the item during the taxable year. Second, economic performance must occur with respect to the item within a reasonable period (but in no event more than 8½ months) after the close of the taxable year. Third, the item must be recurring in nature, and the taxpayer must, from year to year, consistently treat items of that type as incurred in the taxable year in which the all events test (without regard to economic performance) is satisfied. Fourth, either (a) the item must not be a material item, or (b) the accrual of the item in the taxable year in which the all events test (without regard to economic performance) is satisfied must result in a better matching of the item with the income to which it relates than would result from accruing the item in the taxable year in which economic performance occurs. The recurring item exception does not apply to liabilities arising under a workers' compensation act or out of any tort.

Explanation of Regulatory Provisions

Economic Performance With Respect to Property and Services

The proposed regulations modify and clarify the statutory rules concerning when economic performance occurs in the case of property, services, or the use of property provided to or by a taxpayer. First, in the case of a liability of a taxpayer arising from the provision by another person of property or services to the taxpayer, the statute provides that economic performance occurs as the property or services are provided to the taxpayer. The regulations provide rules designed to lessen the burden of a taxpayer incident to determining when property or services are provided to the taxpayer. For example, the regulations provide that a taxpayer may treat property or services as provided to the taxpayer as the taxpayer makes payment for the property or services. However, this treatment is available only if the taxpayer can reasonably expect the property or services to be provided by the other person within 3½ months after the payment is made. Thus, for example, if a taxpayer pays for the cost of property or services, the taxpayer may not deduct the costs or add them to the basis upon payment if economic performance is not reasonably expected to occur within 3½ months of the payment. Nonetheless, the costs will be treated as incurred for purposes of determining production expenditures that attract interest required to be capitalized under section 263A(f). See § 1.263A-1T(b)(2)(iv)(C).

Second, in the case of a liability of a taxpayer to provide property or services, the regulations provide that economic performance occurs as the taxpayer incurs (within the meaning of section 461(h) and the regulations thereunder) costs in connection with such a liability. Thus, for example, if an equipment manufacturer contracts to provide a machine to a corporation, the manufacturer incurs costs (i.e., economic performance occurs) as property, services, and the use of property necessary to make the machine are provided to the manufacturer, rather than as the manufacturer provides the machine to the corporation. This rule was adopted because these costs, and not the underlying "liability" to provide property or services, generally are allowable as a cost, deduction, or expense for Federal income tax purposes.

Third, the regulations provide that in the case of liabilities for property or services that are attributable to long-term contracts, economic performance occurs as the property or services are provided, or as the taxpayer makes payment for the property or services, whichever is earlier.

The Internal Revenue Service invites comments on the interaction between the economic performance requirement

and employee benefit provisions including sections 83, 404, and 419.

Liabilities for Which Payment Is Economic Performance

The regulations identify six types of liabilities, in addition to liabilities arising under a workers' compensation act or out of a tort, for which payment must be made in order for economic performance to occur. These liabilities are (1) Liabilities arising out of a breach of contract; (2) liabilities arising out of a violation of law; (3) rebates and refunds; (4) awards, prizes, and jackpots; (5) amounts paid for insurance, warranty, and service contracts; and (6) taxes other than creditable foreign taxes. The regulations provide that creditable foreign taxes are incurred under the rules in effect before the enactment of section 461(h). This rule is provided in order to preserve the matching principles underlying the foreign tax credit provisions.

The proposed regulations also provide that if section 461(h) or the regulations thereunder do not otherwise provide economic performance rules for a liability, economic performance occurs as payment is made to the person to which the liability is owed. The vast majority of liabilities either involve the provision of property or services by or to a taxpayer, or are specifically designated in the statute or the proposed regulations as payment liabilities. Thus, it is anticipated that few liabilities will fall into this "catch-all" category.

Payment to Another Person

The proposed regulations also provide guidance on what constitutes payment to another person for purposes of section 461(h). The regulations provide that whether payment has occurred is to be determined under the principles applicable to a taxpayer using the cash method of accounting. Thus, the furnishing of a note or other evidence of indebtedness of a taxpayer, or a promise of a taxpayer to provide property or services in the future, is not payment for purposes of section 461(h). In addition, a payment is not an amount transferred as a loan, deposit, or contingent payment with respect to which the taxpayer may receive a refund or credit. Finally, the regulations provide that payment has not been made to another person unless a cash basis taxpayer in the position of that person would be treated as having actually or constructively received the amount of the payment under the principles of section 451. Thus, for example, the purchase of an annuity contract or other asset does not constitute payment to another person unless the ownership of the annuity contract or other asset is transferred to that person.

Persons to Which Payment Constitutes Economic Performance

In general, in the case of liabilities requiring payment, economic performance occurs when payment is made to the person to which the liability is owed. For example, in the case of a liability arising under a workers' compensation act, payment must be made to the person entitled to payment under the workers' compensation act. Generally, a payment to a trust, escrow account, fund, or any person other than the person to which a liability is owed does not constitute performance.

However, payments to certain third persons constitute economic performance. For example, under section 468B, payment to a designated settlement fund constitutes economic performance in the case of certain tort liabilities. The regulations essentially extend the availability of section 468B treatment to certain other payment liabilities by providing that a payment to a "qualified fund" constitutes economic performance. Provisions in the regulations relating to this qualified fund generally conform to the provisions of section 468B. The Internal Revenue Service invites comments as to additional guidance that may be appropriate with respect to the operation of qualified funds and, more generally, the manner and extent to which the Service should exercise its authority to prescribe rules under section 468B(g) (relating to the taxation of certain funds).

In addition, the regulations provide, in connection with the sale of a trade or business by a taxpayer, that if the purchaser agrees to assume a liability of the taxpayer arising out of the trade or business, the taxpayer is treated as making deemed payments on the liability for purposes of section 461(h) as the amount of the liability is included in the amount realized on the transaction by the taxpayer. The regulations define "trade or business" using principles drawn from section 355(b) and the regulations thereunder. It is expected that case law developed with respect to the relevant portions of section 355(b) and the regulations thereunder will apply for purposes of the trade or business definition of the regulations under section 461(h).

Finally, the regulations provide that qualified assignments under section 130, relating to certain personal injury liability assignments, constitute economic performance.

The Internal Revenue Service invites comments on the scope of these exceptions to the rule that payment must be made to the person to which a liability is owed, and comments that identify additional appropriate exceptions. In particular, the Service invites comments identifying the circumstances in which it would be appropriate to provide an additional exception under which economic performance with respect to a liability of a taxpayer would be deemed to occur as the taxpayer pays an unrelated party to assume legal responsibility for satisfying that liability.

Recurring Item Exception

The regulations modify the recurring item exception of section 461(h)(3) by requiring that economic performance occur by the earlier of (1) 8½ months after the close of a taxable year as of the end of which the all events test is met (determined without regard to the economic performance requirement); or (2) the date the taxpayer files a timely return for that taxable year. However, if economic performance with respect to an item occurs after the taxpayer files the return, but within the 8½ month period, the taxpayer may file an amended return treating the item as incurred under the recurring item exception. Furthermore, the regulations identify liabilities, in addition to workers' compensation and tort, to which the recurring item exception does not apply. Finally, the regulations provide that the matching requirement of the recurring item exception is deemed satisfied in the case of the following liabilities: (1) Rebates and refunds, (2) awards, prizes and jackpots, (3) amounts paid for insurance, warranty, and service contracts, and (4) taxes.

Other Timing Rules

The proposed regulations clarify that section 461(h) and the regulations thereunder merely provide rules for determining when a liability may be treated as incurred under the all events test. Other rules determine the manner in which the liability is taken into account for Federal income tax purposes. Liabilities generally are taken into account in the taxable year incurred, whether, for example, as a deduction from gross income under section 162 in the case of deductible liabilities, or through capitalization under section 263 or section 263A in the case of liabilities that relate to the creation of a capital asset. Furthermore, liabilities required to be capitalized may later affect the computation of taxable income through depreciation or otherwise, in accordance with

applicable Code sections and guidance published by the Secretary.

Taxation of Amounts Transferred Under Section 461(f)

The proposed regulations also provide rules relating to the taxation of amounts transferred to an escrowee, trustee, or court in connection with a contested liability within the meaning of section 461(f). The Internal Revenue Service invites comments relating to the application of section 461(f) to liabilities for which the regulations designate payment as economic performance.

Subdivided Real Estate

Finally, because economic performance must occur in order for a liability to be taken into account, the estimated cost of future improvements to subdivided real estate may not be added to the basis of lots sold if economic performance has not occurred with respect to those costs. Therefore, the statute and regulations override Rev. Proc. 75-25, 1975-1 C.B. 720, but only for taxable years beginning after December 31, 1989, pursuant to section 7805(b).

Effective Dates

In general, the regulations are proposed to apply to liabilities that would, under the law in effect before the enactment of section 461(h), be allowable as a deduction or otherwise incurred after July 18, 1984. In the case of amounts transferred to an escrowee, trustee, or court under section 461(f) to provide for the satisfaction of an asserted liability, the regulations are proposed to apply to amounts transferred on or after June 7, 1990. In the case of certain liabilities that require payment to another person in order for economic performance to occur, and in the case of liabilities to make future improvements to subdivided real estate, the regulations are proposed to apply to liabilities that would, under the law in effect before the enactment of section 461(h), be allowable as a deduction or otherwise incurred for taxable years beginning after December 31, 1989. Although portions of the proposed regulations are effective only for taxable years beginning after December 31, 1989, taxpayers are reminded that section 461(h) of the Code became effective after July 18, 1984, and that for the period beginning after July 18, 1984, taxpayers are not entitled to rely on regulations or rulings that are inconsistent with the general principles of economic performance or with the generic exception for recurring items. *See* Conf. Rep. No. 861, 98th Cong., 2d Sess. 876 (1984).

Special Analyses

It has been determined that these proposed rules are not major rules as defined in Executive Order 12291. Therefore, a Regulatory Impact Analysis is not required. It has also been determined that section 553(b) of the Administrative Procedure Act (5 U.S.C. chapter 5) and the Regulatory Flexibility Act (5 U.S.C. chapter 6) do not apply to these regulations, and, therefore, an initial Regulatory Flexibility Analysis is not required. Pursuant to section 7805(f) of the Internal Revenue Code, a copy of the rules will be submitted to the Administrator of the Small Business Administration for comment on their impact on small business.

Comments and Requests for a Public Hearing

Before adopting these proposed regulations, consideration will be given to any written comments that are submitted (preferably eight copies) to the Internal Revenue Service. All comments will be available for public inspection and copying. A public hearing will be held upon written request to the Internal Revenue Service by any person who submits written comments. If a public hearing is held, notice of the time and place will be published in the **Federal Register**.

Drafting Information

The principal author of these regulations is William L. Blagg of the Office of Chief Counsel, Internal Revenue Service. Other personnel from the Service and Treasury Department also participated in their development.

List of Subjects

26 CFR 1.61-1 through 1.281-4

Deductions, Exemptions, Income tax, Taxable income.

26 CFR 1.441-1 through 1.483-2

Income taxes, Accounting, Deferred compensation plans.

Proposed Amendments to the Regulations

For the reasons set forth in the preamble, 26 CFR part 1 is proposed to be amended as follows:

PART 1—INCOME TAX REGULATIONS [AMENDED]

Paragraph 1. The authority for part 1 is amended by removing the following citation:

Section 1.461-3T also issued under 26 U.S.C. 461(h).

Par. 2. The authority for part 1 is amended by adding the following citation:

Authority: Sec. 7805, 68A Stat 917; 26 U.S.C. 7805. * * * Section 1.446-1, § 1.461-1, § 1.461-2, § 1.461-4, § 1.461-5, § 1.461-6, and § 1.461-7T also issued under 26 U.S.C. 461(h). Section 1.461-2 and § 1.461-6(c) also issued under 26 U.S.C. 468B(g). Section 1.461-4(d) also issued under 26 U.S.C. 460.

Par. 3. Section 1.446-1 is amended by revising paragraph (c)(1)(ii) to read as follows:

§ 1.446-1 General rule for methods of accounting.

* * * * *

(c) * * *

(1) * * *

(ii) *Accrual method.* (A) Generally, under an accrual method, income is to be included for the taxable year when all the events have occurred that fix the right to receive the income and the amount of the income can be determined with reasonable accuracy. Under such a method, a liability is incurred, and generally is taken into account for Federal income tax purposes, in the taxable year in which all the events have occurred that establish the fact of the liability, the amount of the liability can be determined with reasonable accuracy, and economic performance has occurred with respect to the liability. (See paragraph (a)(2)(iii)(A) of § 1.461-1 for examples of liabilities that may not be taken into account until after the taxable year incurred, and see §§ 1.461-4 through 1.461-6 for rules relating to economic performance.) Applicable provisions of the Code, the Income Tax Regulations, and other guidance published by the Secretary prescribe the manner in which a liability that has been incurred is taken into account. For example, section 162 provides that a deductible liability generally is taken into account in the taxable year incurred through a deduction from gross income. As a further example, under section 263 or 263A, a liability that relates to the creation of an asset having a useful life extending substantially beyond the close of the taxable year is taken into account in the taxable year incurred through capitalization (within the meaning of § 1.2163A-1T(a)(5)), and may later affect the computation of taxable income through depreciation or otherwise over a period including subsequent taxable years, in accordance with applicable Code sections and guidance published by the Secretary.

(B) The term "liability" includes any item allowable as a deduction, cost, or expense for Federal income tax

purposes. In addition to allowable deductions, the term includes any amount otherwise allowable as a capitalized cost, as a cost taken into account in computing cost of goods sold, as a cost allocable to a long-term contract, or as any other cost or expense. Thus, for example, an amount that a taxpayer expends or will expend for capital improvements to property must be incurred before the taxpayer may take the amount into account in computing its basis in the property. The term "liability" is not limited to items for which a legal obligation to pay exists at the time of payment. Thus, for example, amounts prepaid for goods or services and amounts paid without a legal obligation to do so may not be taken into account by an accrual basis taxpayer any earlier than the taxable year in which those amounts are incurred.

(C) The method used by the taxpayer in determining when income is to be accounted for will be acceptable if it accords with generally accepted accounting principles, is consistently used by the taxpayer from year to year, and is consistent with the Income Tax Regulations. For example, a taxpayer engaged in a manufacturing business may account for sales of the taxpayer's product when the goods are shipped, when the product is delivered or accepted, or when title to the goods passes to the customers, whether or not billed, depending on the method regularly employed in keeping the taxpayer's books.

* * * * *

Par. 4. New § 1.461–0 is added in the appropriate place.

§ 1.461–0 Table of contents.

This section lists the captions that appear in the regulations under section 461 of the Code.

§ 1.461–1 General rule for taxable year of deduction.

(a) General rule.
(1) Taxpayer using cash receipts and disbursements method.
(2) Taxpayer using an accrual method.
(3) Effect in current taxable year of improperly accounting for a liability in a prior taxable year.
(4) Deductions attributable to certain foreign income.
(b) Special rule in case of death.
(c) Accrual of real property taxes.
(1) In general.
(2) Special rules.
(3) When election may be made.
(4) Binding effect of election.
(5) Apportionment of taxes on real property between seller and purchaser.
(6) Examples.
(d) Limitation on acceleration of accrual of taxes.
(e) Dividends or interest paid by certain savings institutions on certain deposits or withdrawable accounts.
(1) Deduction not allowable.
(2) Computation of amounts not allowed as a deduction.
(3) When amounts allowable.

§ 1.461–2 Contested liabilities.

(a) General rule.
(1) Taxable year of deduction.
(2) Exception.
(3) Refunds includible in gross income.
(4) Examples.
(5) Transfers to provide for the satisfaction of a liability described in paragraph (g) of § 1.461–4. [Reserved]
(b) Contest of asserted liability.
(1) Asserted liability.
(2) Definition of the term "contest."
(3) Example.
(c) Transfer to provide for the satisfaction of an asserted liability.
(1) In general.
(2) Examples.
(d) Contest exists after transfer.
(e) Deduction otherwise allowed.
(1) In general.
(2) Example.
(f) Treatment of money or property transferred to an escrowee, trustee, or court and treatment of any income attributable thereto.
(g) Effective dates.

§ 1.461–3 Prepaid interest.

[Reserved]

§ 1.461–4 Economic performance.

(a) Introduction.
(b) Exceptions to the economic performance requirement.
(c) Definitions.
(1) Liability.
(2) Payment.
(d) Liabilities arising out of the provision of services, property, or the use of property.
(1) In general.
(2) Services and property provided to the taxpayer.
(3) Use of property provided to the taxpayer.
(4) Services and property provided by the taxpayer.
(5) Rules relating to the provision of services or property to a taxpayer.
(6) Examples.
(e) Interest.
(f) Liabilities under notional principal amount contracts. [Reserved]
(g) Certain liabilities for which payment is economic performance.
(1) In general.
(i) Person to which payment must be made.
(ii) Payment to person to which liability is owed.
(iii) Person.
(iv) Assignments.
(2) Liabilities arising under a workers' compensation act or out of any tort, breach of contract, or violation of law.
(3) Rebates and refunds.
(4) Awards, prizes, and jackpots.
(5) Insurance, warranty, and service contracts.
(6) Taxes.
(7) Other liabilities.
(8) Examples.
(h) Liabilities arising under the Nuclear Waste Policy Act of 1982.
(i) [Reserved]
(j) Special effective dates and transitional rules.

§ 1.461–5 Recurring item exception.

(a) In general.
(b) Requirements for use of the exception.
(1) General rule.
(2) Amended returns.
(3) Items that are recurring in nature.
(4) Materiality requirement.
(5) Matching requirement.
(c) Types of items not eligible for treatment under the recurring item exception.
(d) Time and manner of adopting the recurring item exception.
(e) Examples.

§ 1.461–6 Economic performance when certain liabilities are assigned or are extinguished by the establishment of a fund.

(a) Qualified assignments of certain personal injury liabilities under section 130.
(b) Section 468B.
(c) Payment to a qualified fund.
(d) Payments to other funds or persons that constitute economic performance. [Reserved]
(e) Effective dates.

§ 1.461–7T Questions and answers relating to the effective dates of section 461(h).

Par. 5. Section 1.461–1 is amended by revising paragraph (a)(2) and the heading and text of paragraph (a)(3) to read as follows:

§ 1.461–1 General rule for taxable year of deduction.

(a) * * *

(2) *Taxpayer using an accrual method*—(i) *In general.* Under an accrual method of accounting, a liability (as defined in § 1.446–1(c)(1)(ii)(B)) is incurred, and generally is taken into account for Federal income tax purposes, in the taxable year in which all the events have occurred that establish the fact of the liability, the amount of the liability can be determined with reasonable accuracy, and economic performance has occurred with respect to the liability. (See paragraph (a)(2)(iii)(A) of this section for examples of liabilities that may not be taken into account until a taxable year subsequent to the taxable year incurred, and see §§ 1.461–4 through 1.461–6 for rules relating to economic performance.) Applicable provisions of the Code, the Income Tax Regulations, and other guidance published by the Secretary prescribe the manner in which a liability that has been incurred is taken into account. For example, section 162 provides that a deductible liability

generally is taken into account in the taxable year incurred through a deduction from gross income. As a further example, under section 263 or 263A, a liability that relates to the creation of an asset having a useful life extending substantially beyond the close of the taxable year is taken into account in the taxable year incurred through capitalization (within the meaning of § 1.263A-1T(a)(5)), and may later affect the computation of taxable income through depreciation or otherwise over a period including subsequent taxable years, in accordance with applicable Code sections and guidance published by the Secretary. The principles of this paragraph (a)(2) also apply in the calculation of earnings and profits and accumulated earnings and profits.

(ii) *Uncertainty as to the amount of a liability.* While no liability shall be taken into account before economic performance and all of the events that fix the liability have occurred, the fact that the exact amount of the liability cannot be determined does not prevent a taxpayer from taking into account that part of the amount of the liability which can be computed with reasonable accuracy within the taxable year. For example, A renders services to B during the taxable year for which A charges $10,000. B admits a liability to A for $6,000 but contests the remainder. B may take into account only $6,000 as an expense for the taxable year in which the services were rendered. See § 1.461-2 for rules that apply if a taxpayer transfers money or other property to provide for the satisfaction of certain contested liabilities.

(iii) *Alternative timing rules.* (A) If any provision of the Code requires a liability to be taken into account in a taxable year later than the taxable year provided in paragraph (a)(2)(i) of this section, the liability is taken into account as prescribed in that Code provision. See, for example, section 267 (transactions between related parties), section 404 (employee benefits), and section 464 (farming syndicates).

(B) If the liability of a taxpayer is subject to section 165 (losses), section 170 (charitable contributions), section 192 (black lung benefit trusts), section 194A (employer liability trusts), section 468 (mining and solid waste disposal reclamation and closing costs), or section 468A (a) (certain nuclear decommissioning costs), the liability is taken into account as determined under that section and not under section 461 or the regulations thereunder.

(C) Section 461 and the regulations thereunder do not apply to any amount allowable under a provision of the Code as a deduction for a reserve for estimated expenses.

(3) *Effect in current taxable year of improperly accounting for a liability in a prior taxable year.* Each year's return should be complete in itself, and taxpayers shall ascertain the facts necessary to make a correct return. The expenses, liabilities, or loss of one year generally cannot be used to reduce the income of a subsequent year. A taxpayer may not take into account in a return for a subsequent taxable year liabilities that, under the taxpayer's method of accounting, should have been taken into account in a prior taxable year. If a taxpayer ascertains that a liability should have been taken into account in a prior taxable year, the taxpayer should, if within the period of limitation, file a claim for credit or refund of any overpayment of tax arising therefrom. Similarly, if a taxpayer ascertains that a liability was improperly taken into account in a prior taxable year, the taxpayer should, if within the period of limitation, file an amended return and pay any additional tax due. However, except as provided in section 905(c) and the regulations thereunder, if a liability is properly taken into account in an amount based on a computation made with reasonable accuracy and the exact amount of the liability is subsequently determined in a later taxable year, the difference, if any, between such amounts shall be taken into account for the later taxable year.

* * * * *

Par. 6. Section 1.461-2 is amended by revising the heading, adding and reserving a new paragraph (a)(5), removing paragraphs (f), (g) and (h), and adding new paragraphs (f) and (g) to read as follows:

§ 1.461-2 Contested liabilities.

(a) * * *

(5) *Transfers to provide for the satisfaction of a liability described in paragraph (g) of § 1.461-4.* [Reserved]

* * * * *

(f) *Treatment of money or property transferred to an escrowee, trustee, or court and treatment of any income attributable thereto*—(1) *In general.* This paragraph (f) applies to any transfer of money or property by a taxpayer to an escrowee, trustee, or court (see paragraph (c)(1) (ii) and (iii) of this section) that is deductible under section 461(f) and paragraph (a)(1) of this section. A transfer to which this paragraph (f) applies creates a "461(f) fund," the taxation of which is governed solely by this paragraph (f). If more than one taxpayer transfers amounts to the same escrowee, trustee, or court in connection with the same contested liability, there is created for each transferor a separate 461(f) fund to which the rules of this paragraph (f) are separately applied.

(2) *Applicable rules.* The following rules apply to a 461(f) fund:

(i) Any transfer of property to a 461(f) fund is, for purposes of section 1001, a disposition of that property by the taxpayer for fair market value on the date of the transfer. Likewise, any transfer of property from a 461(f) fund to any person (including the taxpayer) is, for purposes of section 1001, a disposition of that property by the taxpayer for fair market value on the date of the transfer. For purposes of this paragraph (f)(2)(i), any money or property held by the 461(f) fund after the final resolution of the contest for the benefit of any person other than the person asserting the liability is treated as transferred to the taxpayer during the taxable year of the taxpayer in which the contest is resolved.

(ii) A taxpayer is considered the owner of any 461(f) fund created by a transfer of money or property by the taxpayer. Thus, any income, deductions, or credits of the fund are taken into account in the computation of the taxpayer's taxable income as if no transfer had occurred (except as otherwise provided in this paragraph (f)(2)).

(iii) A taxpayer is not permitted to deduct (or otherwise take into account) any income attributable to the transferred money or property ("fund income"), or the amount of any payment (including a payment of fund income) made from a 461(f) fund to the person asserting the liability.

(iv) A taxpayer must include in gross income the amount of any payment from a 461(f) fund (including a payment of fund income) made to the taxpayer or any other person except—

(A) Amounts paid to the person asserting the liability in satisfaction of the asserted liability;

(B) The amount of any taxes (other than Federal income taxes) attributable to fund income that are paid by the fund; and

(C) An amount equal to transfers to the fund that meet the requirements of a "recovery exclusion" under § 1.111-1(a) (relating to recovery of tax benefit items).

(v) Any taxes (including Federal income taxes, whether paid by the taxpayer or paid by the fund and included in the taxpayer's gross income under paragraph (f)(2)(iv) of this section) that are attributable to fund income are considered transferred to the 461(f) fund,

and thus deductible under paragraph (a) of this section. For any taxable year, the amount of this deduction equals the excess (if any) of—

(A) The tax that would be imposed on the taxpayer for the taxable year determined by taking into account fund income; over

(B) The tax that would be imposed on the taxpayer for the taxable year, determined without regard to fund income.

(vi) Any refund of taxes attributable to fund income is treated as a payment from the fund to the taxpayer and is included in gross income under paragraph (f)(2)(iv) of this section.

(3) *Example.* The following example illustrates the principles of this paragraph (f):

X, an accrual basis, calendar year taxpayer, contests a $9,000 liability asserted against X by Y for hazardous waste disposal services rendered by Y during 1990. In January 1991, X transfers assets having a fair market value of $9,000 and an adjusted basis of $7,000 to a trust in a transaction that satisfies the requirements of § 1.461–2(c). Under section 461(f), X is allowed a $9,000 deduction for 1991. In addition, the asset transfer is considered a disposition of the assets for fair market value for purposes of section 1001. Thus, for 1991, X recognizes a $2,000 gain from the transfer and has a new basis of $9,000 in the assets.

During 1991, the fund assets earn $600, which is included in X's gross income for 1991. X pays, and takes a deduction for, taxes attributable to this amount. The only other deduction X is allowed with respect to the fund is a deduction for administrative expenses.

The fair market value of the transferred assets remains the same. In 1992, the contest is settled and assets having a fair market value of $8,000 are transferred from the fund to Y. X must include in gross income for the 1992 taxable year the $1,600 remaining in the fund. Any amounts earned by the fund in 1992 must also be included in X's gross income for 1992. The transfer to Y of assets having a fair market value of $8,000 is considered a disposition of the assets for purposes of section 1001. Because the fair market value of the assets has not changed, the disposition does not require X to recognize additional gain or loss for 1992.

(g) *Effective dates.* Paragraphs (a) through (e) of this section apply to transfers of money or property made in taxable years beginning after December 31, 1953, and ending after August 16, 1954. Paragraph (f) of this section applies to amounts transferred by a taxpayer on or after June 7, 1990.

§ 1.461(h)–4T [Removed]

Par. 7. Section 1.461–3T is redesignated as § 1.461–7T.

§ 1.461–3T [Redesignated as § 1.461–7T]

Par. 8. Section 1.461(h)–4T is removed.

Par. 9. The following new sections are added immediately after § 1.461–2 to read as follows:

§ 1.461–3 Prepaid interest. [Reserved]

§ 1.461–4 Economic performance.

(a) *Introduction*—(1) *In general.* For purposes of determining whether an accrual basis taxpayer can treat the amount of any liability (as defined in § 1.446–1(c)(1)(ii)(B)) as incurred, the all events test is not treated as met any earlier than the taxable year in which economic performance occurs with respect to the liability.

(2) *Overview.* Paragraph (b) of this section lists exceptions to the economic performance requirement. Paragraph (c) of this section locates the definitions of certain terms for purposes of section 461(h) and the regulations thereunder. Paragraphs (d) through (j) of this section and § 1.461–6 provide rules for determining when economic performance occurs. Section 1.461–5 provides rules relating to an exception under which certain recurring items may be incurred for the taxable year before the year during which economic performance occurs.

(b) *Exceptions to the economic performance requirement.* Paragraph (a)(2)(iii)(B) of § 1.461–1 provides examples of liabilities that are taken into account under rules that operate without regard to the all events test (including economic performance).

(c) *Definitions.* The following cross-references identify certain terms defined for purposes of section 461(h) and the regulations thereunder:

(1) *Liability.* See paragraph (c)(1)(ii)(B) of § 1.446–1 for the definition of "liability."

(2) *Payment.* See paragraph (g)(1)(ii) of this section for the definition of "payment."

(d) *Liabilities arising out of the provision of services, property, or the use of property*—(1) *In general.* The principles of this paragraph (d) determine when economic performance occurs with respect to liabilities arising out of the performance of services, the transfer of property, or the use of property. This paragraph (d) does not apply to liabilities described in paragraph (e) (relating to interest expense) or paragraph (g) (relating to breach of contract, worker's compensation, tort, etc.) of this section. In addition, except as otherwise provided in guidance published by the Secretary, this paragraph (d) does not apply to amounts paid pursuant to a notional principal amount contract.

(2) *Property or services provided to the taxpayer*—(i) *In general.* If the liability of a taxpayer arises out of the providing of property or services to the taxpayer by another person, economic performance occurs as the property or services are provided.

(ii) *Long-term contracts.* In the case of any liability of a taxpayer described in paragraph (d)(2)(i) of this section that is an expense attributable to a long-term contract with respect to which the taxpayer uses the percentage of completion method, economic performance occurs—

(A) As the property or services are provided; or, if earlier,

(B) As the taxpayer makes payment in satisfaction of the liability to the person providing the property or services.

(iii) *Cross-references.* See examples 5 through 9 of paragraph (d)(6) of this section. See paragraph (a)(2)(iii)(A) of § 1.461–1, and example 1 of paragraph (d)(6) of this section, for illustration of the interaction between section 461(h) and employee benefit provisions including sections 404, 404A, and 419. See paragraph (d)(5) of this section for rules relating to when a taxpayer may treat property or services as provided to the taxpayer.

(3) *Use of property provided to the taxpayer.* If the liability of a taxpayer arises out of the use of property by the taxpayer, economic performance occurs ratably over the period of time the taxpayer is entitled to the use of the property. See examples 7 and 10 of paragraph (d)(6) of this section.

(4) *Services and property provided by the taxpayer*—(i) *In general.* If the liability of a taxpayer requires the taxpayer to provide services or property to another person, economic performance occurs as the taxpayer incurs costs (within the meaning of § 1.446–1(c)(1)(ii)) in connection with the satisfaction of the liability. See examples 2 through 4 of paragraph (d)(6) of this section.

(ii) *Barter transactions.* If the liability of a taxpayer requires the taxpayer to provide services, property, or the use of property, and arises out of the use of property by the taxpayer, or out of the provision of property or services to the taxpayer by another person, economic performance occurs to the extent of the lesser of—

(A) The cumulative extent to which the taxpayer incurs costs (within the meaning of § 1.446–1(c)(1)(ii)) in connection with its liability to provide the property or services; or

(B) The cumulative extent to which the property or services are provided to the taxpayer.

(5) *Rules relating to the provision of property or services to a taxpayer.* The following rules apply for purposes of this paragraph (d):

(i) Property and services provided to a taxpayer include property and services provided to another person at the direction of the taxpayer.

(ii) A taxpayer is permitted to treat property or services as provided to the taxpayer as the taxpayer makes payment to the person providing the property or services (as defined in paragraph (g)(1)(ii) of this section), if the taxpayer can reasonably expect the person to provide the property or services within 3½ months after the date of payment.

(iii) A taxpayer is permitted to treat property as provided to the taxpayer when the property is delivered or accepted, or when title to the property passes. The method used by the taxpayer to determine when property is provided is a method of accounting that must comply with the rules of § 1.446-1(e). This, the method of determining when property is provided must be used consistently from year to year, and cannot be changed without the consent of the Commissioner.

(iv) If different services or items of property are required to be provided to a taxpayer under a single contract or agreement, economic performance generally occurs over the time each service is provided and as each item of property is provided. However, if a service or item of property to be provided to the taxpayer is incidental to other services or property to be provided under a contract or agreement, the taxpayer is not required to allocate any portion of the total contract price to the incidental service or property. For purposes of this paragraph (d)(5)(iv), property or services are treated as incidental only if—

(A) The cost of the property or services is treated on the taxpayer's books and records as part of the cost of the other property or services provided under the contract; and

(B) The aggregate cost of the property or services does not exceed 10 percent of the total contract price.

(6) *Examples.* The following examples illustrate the principles of this paragraph (d). For purposes of these examples, it is assumed that the requirements of the all events test other than economic performance have been met, and that the recurring item exception is not used.

Example 1. X corporation, a calendar year, accrual method taxpayer, maintains a vested vacation pay plan pursuant to which the employees of X are unconditionally entitled to vacation pay based on the amount of work performed during any taxable year. During 1990 the employees of X, who all use a calendar taxable year and the cash method of accounting, earn $150,000 of vacation pay. X pays $25,000 of the vacation pay on or before March 15, 1991. The remainder of the vacation pay is paid after March 15, 1991.

Under paragraph (d)(2) of this section, economic performance with respect to the liability for vacation pay occurs as the employees provide services to X. Thus, $150,000 is incurred by X for the 1990 taxable year.

However, amounts paid after March 15, 1991, may be deferred compensation subject to section 404(a)(5), depending on the facts and circumstances (See § 1.404(b)-1T, Q&A-2). Assuming that section 404(a)(5) applies, the $125,000 that X does not pay until after March 15, 1991, is not deductible until the taxable year in which the vacation pay is includible in the gross income of employees participating in the plan, even though economic performance has occurred with respect to the amount. The result would be the same if X maintained this plan for the benefit of calendar year, cash-basis independent contractors. See section 404(d).

Example 2. X corporation, a calendar year, accrual method taxpayer, is an oil company. During March 1990, X enters into an oil and gas lease. In November 1990, X installs a platform and commences drilling. The lease obligates X to remove its offshore platform and well fixtures upon abandonment of the well or termination of the lease. During 1998, X removes the platform and well fixtures at a cost of $200,000.

Under paragraph (d)(4) of this section, economic performance with respect to X's liability to remove the offshore platform and well fixtures occurs as X incurs costs in connection with that liability. X incurs these costs in 1998 as, for example, X's employees provide X with removal services (see paragraph (d)(2) of this section). Consequently, X incurs $200,000 for the 1998 taxable year. Alternatively, assume that during 1990 X pays Z $130,000 to remove the platform and fixtures, and that Z performs these removal services in 1998. Under paragraph (d)(2) of this section, X does not incur this cost until Z performs the services. Thus, economic performance with respect to the $130,000 X pays Z occurs in 1998.

Example 3. W corporation, a calendar year, accrual method taxpayers, sells tractors under a three-year warranty that obligates W to make any reasonable repairs to each tractor it sells. During 1990, W sells ten tractors. In 1992 W repairs, at a cost of $5,000, two tractors sold during 1990.

Under paragraph (d)(4) of this section, economic performance with respect to W's liability to perform services under the warranty occurs as W incurs costs in connection with that liability. W incurs these costs in 1992 as, for example, replacement parts are provided to W (see paragraph (d)(2) of this section). Consequently, $5,000 is incurred by W for the 1992 taxable year.

Example 4. W corporation, a calendar year, accrual method taxpayer, manufactures machine tool equipment. In November 1990, W contracts to provide X corporation with certain equipment on January 1, 1993. The contract is not a long-term contract under section 460 or § 1.451-3. In December 1990, W pays Y corporation $100,000 for certain parts necessary to manufacture the equipment. The parts are provided to W in May 1991. W's employees provide W with services necessary to manufacture the equipment during 1991, for which W pays $150,000 compensation in 1991. In December 1990, W pays Z corporation $50,000 to lease from Z, for the one-year period beginning on January 1, 1991, testing equipment to perform quality control tests required by the agreement with X.

Under paragraph (d)(4) of this section, economic performance with respect to W's liability to provide the equipment to X occurs as W incurs costs in connection with that liability. W incurs these costs during 1991, as services, property, and the use of property necessary to manufacture the equipment are provided to W (see paragraphs (d)(2) and (d)(3) of this section). Thus, $300,000 is incurred by W for the 1991 taxable year. See section 263A and the regulations thereunder for rules relating to the capitalization and inclusion in inventory of these incurred costs.

Alternatively, assume that the agreement with X is a long-term contract as defined in section 460(f), and that W takes into account all items with respect to such contracts under the percentage of completion method as described in secton 460(b)(1). Under paragraph (d)(2)(ii) of this section, the $100,000 W pays in 1990 for parts is incurred for the 1990 taxable year, for purposes of determining the percentage of completion under section 460(b)(1)(A). W's other costs under the agreement are incurred for the 1991 taxable year for this purpose.

Example 5. LP1, a calendar year, accrual method limited partnership, owns the working interest in a parcel of property containing oil and gas. During December 1990, LP1 enters into a turnkey contract with Z corporation pursuant to which LP1 pays Z $200,000 and Z is required to provide a completed well by the close of 1992. In May 1992, Z commences drilling the well, and, in December 1992, the well is completed.

Under paragraph (d)(2) of this section, economic performance with respect to LP1's liability for drilling and development services provided to LP1 by Z occurs as the services are provided. Consequently, $200,000 is incurred by LP1 for the 1992 taxable year.

Example 6. X corporation, a calendar year, accural method taxpayer, is an automobile dealer. On January 15, 1990, X becomes a member of N, a non-profit corporation that provides advertising and promotional activities with respect to automobiles sold by X and other member dealers. As a member of the non-profit corporation, X agrees to pay an additional $10 to Y, the manufacturer of the automobiles, for each automobile purchased by X from Y. Y, acting as an agent for the member dealers, has agreed to remit this amount to N to be used by N for advertising and promotional activities.

During 1990, X purchases from Y 1,000 new automobiles and pays to Y an additional $10,000 as provided in the membership agreement. Y, in turn, pays the $10,000 to N. N uses this $10,000 to provide advertising and promotional activities during 1992.

Under paragraph (d)(2) of this section, economic performance with respect to X's liability for advertising and promotional services provided to X by N occurs as the

services are provided. Consequently, $10,000 is incurred by X for the 1992 taxable year.

Example 7. V corporation, a calendar year, accrual method taxpayer, charters aircraft. On December 20, 1990, V leases a jet aircraft from L for the four-year period that begins on January 1, 1991. The lease obligates V to pay L a base rental of $500,000 per year. In addition, the lease requires V to pay $25 to an escrow account for each hour that the aircraft is flown. The escrow account funds are to be used by L to make necessary repairs to the aircraft. Any amount remaining in the escrow account upon termination of the lease is payable to V. During 1991, the aircraft is flown 1,000 hours and V pays $25,000 to the escrow account. The aircraft is repaired by L in 1993. In 1994, $20,000 is released from the escrow account to pay L for the repairs.

Under paragraph (d)(3) of this section, economic performance with respect to V's base rental liability occurs ratably over the period of time V is entitled to use the jet aircraft. Consequently, the $500,000 rent is incurred by V for the 1991 taxable year and for each of the next three taxable years. Under paragraph (d)(2) of this section, economic performance with respect to the liability to place amounts in escrow occurs as the aircraft is repaired. Consequently, V incurs $20,000 for the 1993 taxable year.

Example 8. The facts are the same as in Example (7), except that on December 10, 1991, one of the aircraft's engines fails. On December 15, 1991, $20,000 is released from the escrow account to L in payment for repairs to the engine that V reasonably expects L to perform in January 1992. Economic performance with respect to V's liability to L for repair services occurs as L provides the services. However, under paragraph (d)(5)(ii) of this section, V is permitted to treat the repair services as provided to V as V pays L for the services. If V so treats the services as provided, V incurs $20,000 for the 1991 taxable year.

Example 9. W corporation, a calendar year, accrual method taxpayer, is an investment banking firm. W has an ongoing contract with Z, an office supply vendor, under which Z is obligated to provide office supplies to W. On December 15, 1990, W pays Z $2,000 for office supplies that W reasonably expects Z to deliver by the end of January 1991. Economic performance with respect to W's liability for property to be provided by Z occurs as Z provides the property. However, under paragraph (d)(5)(ii) of this section, W is permitted to treat the supplies as provided to W as W makes payment to Z for the supplies. If W so treats the property as provided, W incurs $2,000 for the 1990 taxable year.

Example 10. X corporation, a calendar year, accrual method taxpayer, manufactures and sells electronic circuitry. On November 15, 1990, X enters into a contract with Y that entitles X to the exclusive use of a patent owned by Y for the first five-year period beginning on January 1, 1991. Pursuant to the contract, X pays Y $100,000 on December 30, 1990.

Under paragraph (d)(3) of this section, economic performance with respect to X's liability for the use of property occurs ratably over the period of time X is entitled to use the patent. Consequently, $20,000 is incurred by X for 1991 and for each of the succeeding four taxable years.

(e) *Interest.* In the case of interest, economic performance occurs as the interest cost economically accrues, in accordance with the principles of relevant provisions of the Code.

(f) *Liabilities under notional principal amount contracts.* [Reserved]

(g) *Certain liabilities for which payment is economic performance*—(1) *In general*—(i) *Person to which payment must be made.* In the case of liabilities described in paragraphs (g) (2) through (7) of this section, economic performance occurs when, and to the extent that, payment is made to the person to which the liability is owned. Thus, except as otherwise provided in § 1.461–6, economic performance does not occur as a taxpayer makes payments in connection with such a liability to any other person, including a trust, escrow account, court-administered fund, or any similar arrangement, unless the payments constitute payment to the person to which the liability is owed under paragraph (g)(1)(ii)(B) of this section. Instead, economic performance occurs as payments (including payments of investment income attributable to transferred amounts) are made from that other person or fund to the person to which the liability is owed. For example, economic performance occurs as payments are made from a court-administered fund to a plaintiff prevailing in a tort suit. For rules relating to the taxation of amounts transferred to a fund, see section 468B(g) and the regulations thereunder.

(ii) *Payment to person to which liability is owed.* Paragraph (d)(5) of this section provides that is certain cases a taxpayer may treat services or property as provided to the taxpayer as the taxpayer makes payments to the person providing the services or property. In addition, this paragraph (g) provides that in the case of certain liabilities of a taxpayer, economic performance occurs as the taxpayer makes payment to persons specified therein. For these and all other purposes of section 461(h) and the regulations thereunder:

(A) *Payment.* The term "payment" has the same meaning as for determining whether a taxpayer using the cash receipts and disbursements method of accounting has made a payment. Thus, for example, payment includes the furnishing of cash or cash equivalents. Payment does not include the furnishing of a note or other evidence of indebtedness of the taxpayer, whether or not the evidence is guranteed by any other instrument (including a standby letter of credit) or by any third party (including a government agency). As a further example, payment does not include a promise of the taxpayer to provide property or services in the future (whether or not the promise is evidenced by a contract or other written agreement). In addition, payment does not inclde an amount transferred as a loan, refundable deposit, or contingent payment with respect to which the taxpayer may be, or become, entitled to receive a refund or credit.

(B) *Person to which payment is made.* Payment to another person is accomplished in paragraph (g)(1)(ii)(A) of this section is satisfied and a cash basis taxpayer in the position of that person would be treated as having actually or constructively received the amount of the payment as gross income under the principles of section 451 (without regard to section 104(a) or any other provision that specifically excludes the amount from gross income). Thus, for example, the purchase of an annuity contract or any other asset generally does not constitute payment to the person to which a liability is owed unless the ownership of the contract or other asset is transferred to the person.

(C) *Payment is the case of liabilities that are assumed in connection with the sale of a trade or business—(1) In general.* If, in connection with the sale or exchange of a trade or business by a taxpayer, the purchaser expressly assumes a liability arising out of the trade or business that the taxpayer (but for the economic performance requirement) would have been entitled to incur as of the date of the sale, the taxpayer is deemed to make payments with respect to the liability as the amount of the liability is included in the amount realized on the transaction by the taxpayer. See § 1.1001–2 for rules relating to the inclusion in amount realized from a discharge of liabilities resulting from a sale or exchange.

(*2*) *Trade or business.* For purposes of this paragraph (g)(1)(ii)(C), a trade or business is a specific group of activities carried on by the taxpayer for the purpose of earning income or profit if every operation that is necessary to the process of earning income or profit is included in such group. Thus, for example, such a group of activities generally must include the collection of income and the payment of expenses.

(*3*) *Tax avoidance.* This paragraph (g)(1)(ii)(C) does not apply if the district director determines that tax avoidance is one of the taxpayer's principal purposes for the sale of a trade or business.

(iii) *Person.* For purposes of this paragraph (g), "person" has the same meaning as in section 7701(a)(1), except that it also includes any foreign state, the United States, any State or political subdivision thereof, any possession of the United States, or any agency or instrumentality of any of the foregoing.

(iv) *Assigments.* If a person that has a right to receive payment in satisfaction of a liability described in paragraph (g)(2) through (5) of this section makes a valid assignment of that right to a second person, or if the right is assigned to the second person through operation of law, then payment to the second person in satisfaction of that liability constitutes payment to the person to which the liability is owed.

(2) *Liabilities arising under a workers' compensation action or out of any tort, breach of contract, or violation of law.* If the liability of a taxpayer requires a payment or series of payments to another person and arises under any workers' compensation act or arises out of any tort, breach of contract, or violation of law, economic performance occurs as payment is made to the person to which the liability is owed. See examples 1 and 2 of paragraph (g)(8) of this section. For purposes of this paragraph (g)(2)—

(i) A liability to make payments for services, property, or other consideration provided under a contract is not a liability arising out of a breach of that contract unless the payments are in the nature of incidental, consequential, or liquidated damages; and

(ii) A liability arising out of a tort, breach of contract, or violation of law includes a liability arising out of the settlement of a dispute in which a tort, breach of contract, or violation of law is alleged.

(3) *Rebates and refunds.* If the liability of a taxpayer is to pay a rebate or refund to another person (whether paid in property, money, or as a reduction in the price of goods or services to be provided in the future by the taxpayer), economic performance occurs as payment is made to the person to which the liability is owed. This paragraph (g)(3) applies to all rebates, refunds and payments or transfers in the nature of a rebate or refund regardless of whether they are characterized as a deduction from gross income, an adjustment to gross receipts or total sales, or an adjustment or addition to cost of goods sold. In the case of a rebate or refund made as a reduction in the price of goods or services to be provided in the future by the taxpayer, "payment" is deemed to occur as the taxpayer would otherwise be required to recognize income resulting from a disposition at an unreduced price. For purposes of determining whether the recurring item exception of § 1.461–5 applies, a liability that arises out of a tort, breach of contract, or violation of law is not considered a rebate or refund. See example 3 of paragraph (g)(8) of this section.

(4) *Awards, prizes, and jackpots.* If the liability of a taxpayer is to provide an award, prize, jackpot, or other similar payment to another person, economic performance occurs as payment is made to the person to which the liability is owed. See examples 4 and 5 of paragraph (g)(8) of this section.

(5) *Insurance, warranty, and service contracts.* If the liability of a taxpayer arises out of the provision to the taxpayer of insurance, or a warranty or service contract, economic performance occurs as payment is made to the person to which the liability is owed. See examples 6 through 9 of paragraph (g)(8) of this section. For purposes of this paragraph (g)(5)—

(i) A warranty or service contract is a contract that a taxpayer enters into in connection with property bought or leased by the taxpayer, pursuant to which the other party to the contract promises to replace or repair the property under specified circumstances.

(ii) The term "insurance" has the same meaning as for purposes of determining the deductibility of amounts paid or incurred for insurance under section 162.

(6) *Taxes*—(i) *In general.* Except as otherwise provided in this paragraph (g)(6), if the liability of a taxpayer is to pay a tax, economic performance occurs as the tax is paid to the governmental authority that imposed the tax. For purposes of this paragraph (g)(6), a tax does not include a charge collected by a governmental authority for specific extraordinary property or services provided to a taxpayer by the governmental authority. Examples of such a charge include the purchase price of a parcel of land sold to a taxpayer by a governmental authority and a charge for labor engaged in by government employees to improve that parcel. In certain cases, a liability to pay a tax is permitted to be taken into account in the taxable year before the taxable year during which economic performance occurs under the recurring item exception of § 1.461–5. See example 10 of paragraph (g)(8) of this section.

(ii) *Licensing fees.* If the liability of a taxpayer is to pay a licensing or permit fee required by a governmental authority, economic performance occurs as the fee is paid to the governmental authority, or as payment is made to any other person at the direction of the governmental authority.

(iii) *Exceptions*—(A) *Real property taxes.* If a taxpayer has made a valid election under section 461(c), the taxpayer's accrual for real property taxes is determined under section 461(c). Otherwise, economic performance with respect to a property tax liability occurs as the tax is paid, as specified in paragraph (g)(6)(i) of this section.

(B) *Certain foreign taxes.* If the liability of a taxpayer is to pay an income, war profits, or excess profits tax that is imposed by the authority of any foreign country or possession of the United States and is creditable under section 901 (including a creditable tax described in section 903 that is paid in lieu of such a tax), economic performance occurs when the requirements of the all events test (as described in § 1.446–1(c)(1)(ii)) other than economic performance are met, whether or not the taxpayer elects to credit such taxes under section 901(a).

(7) *Other liabilities.* In the case of a taxpayer's liability for which economic performance rules are not provided elsewhere in this section, economic performance occurs as the taxpayer makes payments in satisfaction of the liability to the person to which the liability is owed. This paragraph (g)(7) applies only if the liability cannot properly be characterized as a liability covered by rules provided elsewhere in this section. If a liability may properly be characterized as, for example, a liability arising from the provision of goods or services to, or by, a taxpayer, the determination as to when economic performance occurs with respect to that liability is made under paragraph (d) of this section and not under this paragraph (g)(7).

(8) *Examples.* The following examples illustrate the principles of this paragraph (g). For purposes of these examples, it is assumed that the elements of the all events test other than economic performance have been met and, except as otherwise provided, that the recurring item exception is not used.

Example 1. During the period 1970 through 1975, Z corporation, a calendar year, accrual method taxpayer, manufactured and distributed industrial products that contained carcinogenic substances. In 1990, a number of lawsuits are filed against Z alleging damages due to exposure to these products. In settlement of a lawsuit maintained by A, Z agrees to purchase an annuity contract that will provide annual payments to A of $50,000 for a period of 25 years. On December 15, 1990, Z pays W, an unrelated life insurance company, $491,129 for such an annuity contract. Z retains ownership of the annuity contract.

Under paragraph (g)(2) of this section, economic performance with respect to Z's liability to A occurs as each payment is made to A. Consequently, $50,000 is incurred by Z for each taxable year that a payment is made to A under the annuity contract. (Z must also include in income a portion of amounts paid under the annuity, pursuant to section 72.) The result is the same if in 1990 Z secures its obligation with a standby letter of credit.

If, instead, Z transfer ownership of the annuity contract to A, an amount equal to the fair market value of the annuity on the date of transfer is incurred by Z in the taxable year of the transfer (see paragraph (g)(1)(ii)(B) of this section).

Example 2. Assume the same facts as in Example (1), except that Z is required by court order to pay $15,000,000 to a fund that will assume sole liability for a specified class of tort claims arising out of the manufacture and distribution of Z products containing carcinogenic substances.

If Z does not (or cannot) elect the application of section 468B (designated settlement fund), then under paragraph (g)(1)(i) and (g)(2) of this section, economic performance with respect to the $15,000,000 liability occurs only as payments are made to the underlying tort claimants from the fund. Consequently, Z incurs only those amounts actually paid to the claimants from the fund during the taxable year. If Z properly elects to application of section 468B, economic performance with respect to the $15,000,000 liability occurs as Z makes payments to the fund.

Example 3. X corporation, a calendar year, accrual method taxpayer, manufactures and sells hardware products. X enters into agreements that entitle each of its distributors to a rebate (or discount on future purchases) from X based on the amount of purchases made by the distributor from X during any calendar year. During the 1990 calendar year, X becomes liable to pay a $2,000 rebate to distributor A. X pays A $1,200 of the rebate on January 15, 1991, and the remaining $800 on October 15, 1991. Assume the rebate is deductible (or allowable as an adjustment to gross receipts or cost of goods sold) when incurred.

If X does not, or is not entitled to, adopt the recurring item expection described in § 1.461–5 with respect to rebates and refunds, then under paragraph (g)(3) of this section, economic peformance with respect to the $2,000 rebate liability occurs in 1991. However, if X has made a proper election under § 1.461–5, and as of December 31, 1990, all events have occurred that determine the fact of the rebate liability, X incurs $1,200 for the 1990 taxable year. Because economic performance (payment) with respect to the remaining $800 does not occur until October 15, 1991 (more than 8½ months after the end of 1990), X cannot use the recurring item exception (see § 1.461–5). Thus, the $800 is not incurred by X until the 1991 taxable year. The result in this example would be the same if, instead of making the cash payments to A, during 1991 X adjusts the price paid by A for hardware purchased by A that is delivered to A during 1991.

Example 4. W corporation, a calendar year, accural method taxpayer, produces and sells breakfast cereal. W conducts a contest pursuant to which the winner is entitled to $10,000 per year for a period of 20 years. On December 1, 1990, As is declared the winner of the contest and is paid $10,000 by W. In addition, on December 1 of each of the next nineteen years, W pays $10,000 to A.

Under paragraph (g)(4) of this section, economic performance with respect to the $200,000 contest liability occurs as each of the $10,000 payments is made by W to A. Consequently, $10,000 is incurred by W for the 1990 taxable year and for each of the succeeding nineteen taxable years.

Example 5. Y corporation, a calendar year, accrual method taxpayer, owns a casino that contains progressive slot machines. A progressive slot machine provides a guaranteed jackpot amount that increases as money is gambled through the machine until the jackpot is won or until a maximum predetermined amount is reached. On July 1, 1991, the guaranteed jackpot amount on one of Y's slot machines reaches the maximum predetermined amount of $50,000. On February 1, 1992, the $500,000 jackpot is paid to B.

Under paragrpah (g)(4) of this section, economic performance with respect to the $50,000 jackpot liability occurs on the date the jackpot is paid to B. Consequently, $50,000 is incurred by Y for the 1992 taxable year.

Example 6. X corporation, a calendar year, accrual method taxpayer, manufactures and distributes automobiles. On December 1, 1990, X enters into a contract with Z, a property and casualty insurance company unrelated to X. Under the contract, X must pay Z $25 for each automobile manufactured by X during the 1991 calendar year. This amount is payable monthly based on the automobiles manufactured during the preceding month. In return, Z must satisfy and liability of X to a third party for damages attributable to a defect in these automobiles (a "1991 product liability loss"). X is not entitled to a refund, credit or other benefit under the contract. X manufactures 100,000 automobiles during the 1991 calendar year.

Assuming the arrangement constitutes insurance, under paragraph (g)(5) of this section economic performance occurs over the 1991 taxable year, as the premium is paid. Consequently, the $2,500,000 insurance premium is incurred by X for the 1991 taxable year.

Example 7. V corporation, a calendar year, accrual method taxpayer, manufactures toys. V enters into a contract with W, an unrelated insurance company, on December 15, 1990. The contract obligates V to pay W a premium of $500,000 before the end of 1993. The contract obligates W to satisfy any liability of V resulting from claims made during 1991 or 1992 against V by any third party for damages attributable to defects in toys manufactured by V. Pursuant to the contract, V pays W a premium of $500,000 on September 1, 1993.

Assuming the arrangement constitutes insurance, economic performance occurs as the premium is paid. Thus, $500,000 is incurred by V for the 1993 taxable year.

Example 8. Y corporation, a calendar year, accrual method taxpayer, is a common carrier. On December 15, 1990, Y contracts to pay Z, an unrelated insurance company, $360,000 in 1991. In return, Z must satisfy any liability of Y for damages that arises under a workers' compensation act or out of any tort if the event that causes the damages occurs during 1991 or 1992. Y pays $360,000 to Z during Y's 1991 taxable year.

Assume that the arrangement constitutes insurance under section 162. Economic performance with respect to a liability for insurance occurs as the premiums for the insurance are paid. Consequently, $360,000 is incurred by Y for the 1991 taxable year. The period for which the $360,000 amount is permitted to be taken into account is determined under the capitalization rules because the insurance contract is an asset having a useful life extending substantially beyond the close of the taxable year.

Example 9. Assume the same facts as in Example (8), except that Y is obligated to pay the first $5,000 of any damages covered by the arrangement with Z. Y is, in effect, self-insured to the extent of this $5,000 "deductible." Thus, under paragraph (g)(1) of this section, economic performance with respect to the $5,000 liability does not occur until the amount is paid to the person to which the tort or workers' compensation liability is owed (whether paid to that person by Y or Z).

Example 10. The laws of State A provide that every person owning personal property located in State A on the first day of January shall be liable for tax thereon and that a lien for such tax shall attach as of such date. In addition, the laws of State A provide that 60% of the tax is due on the first day of December following the lien date and the remaining 40% is due on the first day of July of the succeeding year. On January 1, 1990, X corporation, a calendar year, accrual method taxpayer, owns personal property located in State A. State A imposes a $10,000 tax on X with respect to that property on January 1, 1990. X pays State A $6,000 of the tax on December 1, 1990, and the remaining $4,000 on July 1, 1991.

Under paragraph (g)(6) of this section, economic performance with respect to $6,000 of the tax liability occurs on December 1, 1990. Consequently, $6,000 is incurred by X for the 1990 taxable year. Economic performance with respect to the remaining $4,000 of the tax liability occurs on July 1, 1991. If X has adopted the recurring item exception described in § 1.461–5 as a method of accounting for taxes, and as of December 31, 1990, all events have occurred that determine the liability of X for the remaining $4,000, X also incurs $4,000 for the 1990 taxable year. If X does not adopt the recurring item exception, the $4,000 is not incurred by X until the 1991 taxable year.

(h) *Liabilities arising under the Nuclear Waste Policy Act of 1982.* Notwithstanding the principles of paragraph (d) of this section, economic performance with respect to the liability of an owner or generator of nuclear waste to make payments to the Department of Energy ("DOE") pursuant to a contract required by the Nuclear

Waste Policy Act of 1982 (Pub. L. 97–425, 42 U.S.C. 10101–10226 (1982)) occurs as each payment under the contract is made to DOE and not when DOE satisfies its obligations under the contract. This rule applies to the continuing fee required by 42 U.S.C. 10222(a)(2) (1982), as will as the one-time fee required by 42 U.S.C. 10222(a)(3) (1982). For rules relating to when economic performance occurs with respect to interest, see paragraph (e) of this section.

(i) [Reserved]

(j) *Special effective dates and transitional rules.* (1) Except as otherwise provided in paragraph (j)(2) of this section, section 461(h) and this § 1.461–4 apply to liabilities that would, under the law in effect before the enactment of section 461(h), be allowable as a deduction or otherwise incurred after July 18, 1984. For example, this effective date applies to liabilities arising under a workers' compensation act or out of any tort. See § 1.461–7T for rules relating to the effective dates of section 461(h).

(2) Rules for liabilities contained in paragraph (g) of this section (other than liabilities arising under a workers' compensation act or out of any tort) apply to liabilities that would, under the law in effect before the enactment of section 461(h), be allowable as a deduction or otherwise incurred for taxable years beginning after December 31, 1989. Thus, there is no section 481(a) adjustment with respect to any change in the timing of when a liability is incurred that may result from compliance with paragraph (g) of this section. See § 1.461–7T for an explanation of the principles of this "cut-off method." A taxpayer s permitted, however, to elect to change the timing of when a liability described in this paragraph (j)(2) is incurred through a full-year change in method of accounting pursuant to the procedures and principles of § 1.461–7T, subject to the conditions of section 4 of Rev. Proc. 84–74, 1984–2 C.B. 736 (as amended). The Commissioner may provide additional published guidance relating to these changes, including rules regarding any required adjustment under section 481(a).

§ 1.461–5 Recurring item exception.

(a) *In general.* Except as otherwise provided in paragraph (c) of this section, a taxpayer using an accrual method of accounting may adopt the recurring item exception described in paragraph (b) of this section as a method of accounting for one or more types of recurring items incurred by the taxpayer.

(b) *Requirements for use of the exception.* (1) *General rule.* Under the recurring item exception, a liability is treated as incurred for a taxable year if—

(i) As of the end of that taxable year, all events have occurred that establish the fact of the liability and the amount of the liability can be determined with reasonable accuracy;

(ii) Economic performance with respect to the liability occurs on or before the earlier of—

(A) The date the taxpayer files a timely (including extensions) return for that taxable year; or

(B) The 15th day of the 9th calendar month after the close of that taxable year;

(iii) The liability is recurring in nature; and

(iv) Either—

(A) The amount of the liability is not material; or

(B) The accrual of the liability for that taxable year results in a better matching of the liability with the income to which it relates than would result from accruing the liability for the taxable year in which economic performance occurs.

(2) *Amended returns.* A taxpayer may file an amended return treating a liability as incurred under the recurring item exception for a taxable year if economic performance with respect to the liability occurs after the taxpayer files a return for that year, but within 8½ months after the close of that year.

(3) *Liabilities that are recurring in nature.* A liability is recurring if it can generally be expected to be incurred from one taxable year to the next. However, a taxpayer may treat such a liability as recurring in nature even if it is not incurred by the taxpayer in each taxable year. In addition, a liability that has never previously been incurred by a taxpayer may be treated as recurring if it is reasonable to expect that the liability will be incurred on a recurring basis in the future.

(4) *Materiality requirement.* For purposes of this paragraph (b):

(i) In determining whether a liability is material, consideration shall be given to the amount of the liability in absolute terms and in relation to the amount of other items of income and expense attributable to the same activity.

(ii) A liability is material if it is material for financial statement purposes under generally accepted accounting principles.

(iii) A liability that is immaterial for financial statement purposes under generally accepted accounting principles may be material for purposes of this paragraph (b).

(5) *Matching requirement.* (i) In determining whether the matching requirement of paragraph (b)(1)(iv)(B) of this section is satisfied, generally accepted accounting principles are an important factor, but are not dispositive.

(ii) In the case of a liability described in paragraph (g)(3) (rebates and refunds), paragraph (g)(4) (awards, prizes, and jackpots), paragraph (g)(5) (insurance, warranty, and service contracts), or paragraph (g)(6) (taxes) of § 1.461–4, the matching requirement of paragraph (b)(1)(iv)(B) of this section shall be deemed satisfied.

(c) *Types of liabilities not eligible for treatment under the recurring item exception.* The recurring item exception does not apply to any liability of a taxpayer described in paragraph (e) (interest), paragraph (g)(2) (workers' compensation, tort, breach of contract, and violation of law), or paragraph (g)(7) (other liabilities) of § 1.461-4. Moreover, the recurring item exception does not apply to any liability incurred by a tax shelter, as defined in section 461 (i) and § 1.488–1T (b).

(d) *Time and manner of adopting the recurring item exception.* If a taxpayer has never incurred a type of liability (as described in Q&A–3 (d) of § 1.461–7T) prior to its first taxable year beginning after December 31, 1989, the taxpayer is permitted to adopt the recurring item exception as a method of accounting for that type of liability, but only for its first taxable year beginning after December 31, 1989, that the type of liability is incurred by the taxpayer. If a taxpayer has incurred a type of liability prior to its first taxable year beginning after December 31, 1989, the taxpayer is granted the consent of the Commissioner to change to the recurring item exception method of accounting for that type of liability, but only for its first taxable year beginning after December 31, 1989. In either of these cases, the recurring item exception must be adopted as prescribed in Q&A–7 (b) of § 1.461–7T, applied by substituting the appropriate taxable year described above in this paragraph (d) for "the taxable year that includes July 19, 1984," and any resulting section 481 (a) adjustment is taken into account ratably over a 3-year adjustment period, pursuant to the principles of Q&A–8 and Q&A–9 of § 1.461–7T. In all other cases, any change to or from the recurring item exception method of accounting (for either a type of item or for all items) is a change in method of accounting subject to section 446 (e) and § 1.446–1 (e).

(e) *Examples.* The following examples illustrate the principles of this section:

Example 1. Y corporation, a calendar year, accrual method taxpayer, manufactures and distributes video cassette recorders. Y offers to refund the price of the recorder to any purchaser not satisfied with the recorder. During the 1990 taxable year, 100 purchasers request a refund of the $500 purchase price. Y refunds $30,000 on or before September 15, 1991, and the remaining $20,000 after such date but before the end of the 1991 taxable year.

Under paragraph (g)(3) of § 1.461-4, economic performance with respect to $30,000 of the refund liability occurs on or before September 15, 1991. Assume the refund is deductible (or allowable as an adjustment to gross receipts or cost of goods sold) when incurred. If Y does not, or is not entitled to, adopt the recurring item exception with respect to rebates and refunds, $30,000 is incurred by Y for the 1991 taxable year. However, if Y has made a proper election under this section, and as of December 31, 1990, all events have occurred that determine the fact of the liability for the $30,000, Y incurs that amount for the 1990 taxable year. Because economic performance (payment) with respect to the remaining $20,000 occurs after September 15, 1991 (more than 8½ months after the end of 1990), that amount is not eligible for recurring item treatment under this section. Thus, the $20,000 amount is not incurred by Y until the 1991 taxable year.

Example 2. X corporaton, a calendar year, accrual method taxpayer, is a manufacturer of printing presses. Under its method of accounting, X recognizes sales income upon execution of the sales contract, rather than upon shipment. In December 1990, X contracts to pay C, a common carrier, $10,000 upon June 1991 delivery of 10 presses sold by X in November 1990. X generally incurs such shipping costs from one taxable year to the next. Economic performance with respect to the amount paid to C for shipping services occurs in June 1991, as C provides the shipping services (see § 1.461-4(d)(2)).

Assume that all the events that fix and determine X's $10,000 liability occur in 1990. If X adopts the recurring item exception, X may deduct $10,000 for its 1990 taxable year, even though economic performance does not occur until June 1991. The $10,000 expense relates to 1990 income from the sale. Thus, better matching results from its accrual in the taxable year preceding the year during which economic performance occurs.

Example 3. Assume the same facts as in Example (2), and assume that X files its income tax return for 1990 on March 15, 1991. Under paragraph (b)(1)(ii) of this section, the costs are ineligible for recurring item exception treatment because economic performance with respect to the costs does not occur before X files a return for the taxable year for which the item would have been deducted under the exception. However, since economic performance occurs within 8½ months after 1990, X may file an amended return claiming the deduction for its 1990 taxable year (see paragraph (b)(2) of this section).

§ 1.461-6 Economic performance when certain liabilities are assigned or are extinguished by the establishment of a fund.

(a) *Qualified assignments of certain personal injury liabilities under section 130.* In the case of a qualified assignment (within the meaning of section 130(c)), economic performance occurs as a taxpayer-assignor makes payments that are excludible from the income of the assignee under section 130(a).

(b) *Section 468B.* Economic performance occurs as a taxpayer makes qualified payments to a designated settlement fund under section 468B, relating to special rules for designated settlement funds.

(c) *Payment to a qualified fund*—(1) *In general.* In the case of a liability described in paragraph (g)(2) of § 1.461-4 (other than a liability described in section 468B(d)(2)(D)), economic performance occurs as a taxpayer makes "approved payments" in satisfaction of the liability to a "qualified fund."

(2) *Qualified fund*—(i) *In general.* A qualified fund is a fund—

(A) That is established by an order described in paragraph (c)(2)(ii)(A) of this section and that extinguishes a liability of the taxpayer specified in paragraph (c)(1) of this section;

(B) That is administered by persons a majority of whom by vote are independent of the taxpayer;

(C) Under the terms of which the taxpayer or any related person cannot hold any beneficial interest in the income or corpus of the fund;

(D) To which no amounts can be transferred except approved payments;

(E) From which no amounts may be transferred to the taxpayer or any related person; and

(F) With respect to which an election has been made under this section.

(ii) *Other definitions.* For purposes of this paragraph (c)—

(A) *Approved payment.* An approved payment is any money or property, other than stock or indebtedness of the taxpayer (or any related person), irrevocably transferred to a qualified fund pursuant to an order of the United States, any State or political subdivision thereof, any possession of the United States, or any agency or instrumentality (including a court of law) of any of the foregoing. While an approved payment can include amounts received as a settlement of an insurance claim, no deduction is allowed for the transfer of those amounts to the extent the amounts are excluded from the taxpayer's gross income.

(B) *Extinguishment of liability.* [Reserved]

(C) *Related person.* "Related person" has the same meaning as in sections 267(b) and 707(b), applied by substituting 10 percent for 50 percent each place it appears.

(iii) *Exceptions.* A qualified fund does not include—

(A) A fund that is established to satisfy any contested liability of the taxpayer within the meaning of § 1.461-2(b); or

(B) A welfare benefit fund as defined in section 419.

(3) *Disqualification of fund.* If a qualified fund fails to satisfy any of the requirements of paragraph (c)(2) of this section for any taxable year—

(i) All amounts remaining in the fund shall be treated as transferred to the taxpayer in the taxable year of such failure; and

(ii) The taxpayer's tax liability for the year shall be computed without application of this paragraph (c). Thus, for example, deductions relating to a liability for which a fund is established may not be taken until the taxable year during which payments are made to the person entitled to payment (or as otherwise specified in this section).

(4) *Taxation of qualified fund.* The gross income of a qualified fund is taxed at the maximum rate in effect for the taxable year under section 1(e) of the Code. Approved payments to a fund are not treated as income to the fund. No deductions to the gross income of the fund are allowed except a deduction for any ordinary and necessary administrative or incidental costs incurred by the fund that would be deductible by a corporation.

(5) *Subtitle F.* For purposes of subtitle F (procedure and administration), a qualified fund is treated as a corporation and any tax imposed by this paragraph (c) is treated as a tax imposed by section 11 of the Code.

(6) *Time and manner of making election.* An election under this paragraph (c) is made under guidance published by the Secretary, and is revocable only with the consent of the Commissioner. See section 446(e) and § 1.446-1(e).

(d) *Payments to other funds or persons that constitute economic performance.* [Reserved]

(e) *Effective dates.* The rules in paragraphs (a) and (b) of this section apply to payments after July 18, 1984. The rules in paragraph (c) of this section apply to payments in taxable years beginning after December 31, 1989.

Par. 10. Section 1.61–3 is amended by adding a new sentence at the end of paragraph (a) to read as follows:

§ 1.61–3 Gross income derived from business.

(a) * * * Thus, for example, an amount cannot be taken into account in the computation of cost of goods sold any earlier than the taxable year in which economic performance occurs with respect to the amount (see § 1.446–1(c)(1)(ii)).

* * * * *

Par. 11. Section 1.263(a)–1 is amended by adding new text to the end of paragraph (b) to read as follows:

§ 1.263(a)–1 Capital expenditures; in general.

* * * * *

(b) * * * An amount referred to in paragraph (a) of this section is a capital expenditure that is taken into account through inclusion in inventory costs or a charge to capital accounts or basis no earlier than the taxable year during which the amount is incurred within the meaning of § 1.446–1(c)(1)(ii). Capital expenditures are subsequently recovered through depreciation, amortization, cost of goods sold, as an adjustment to basis, or otherwise, at such time as the property to which the amount relates is used, sold, or otherwise disposed of by the taxpayer, in accordance with applicable Code sections and guidance published by the Secretary.

* * * * *

Par. 12. Section 1.263A–1T is amended by adding a new sentence to the end of paragraph (a)(5)(i) to read as follows:

§ 1.263A–1T Capitalization and inclusion in inventory costs of certain expenses (temporary).

(a) * * *

(5) * * *

(i) * * * However, the amount of any cost required to be capitalized may not be included in inventory or charged to capital accounts or basis beginning any earlier than the taxable year during which the amount is incurred within the meaning of § 1.446–1(c)(1)(ii).

* * * * *

Par. 13. Section 1.451–3 is amended by adding a new paragraph (a)(8) to read as follows:

§ 1.451–3 Long-term contracts.

(a) * * *

(8) *Incurred.* For purposes of this section, the term "incurred" has the same meaning as in § 1.446–1(c)(1)(ii).

* * * * *

Fred T. Goldberg, Jr.,
Commissioner of Internal Revenue.

[FR Doc. 90–13117 Filed 6–6–90; 8:45 am]
BILLING CODE 4830–01–M

DEPARTMENT OF THE INTERIOR

Minerals Management Service

30 CFR Part 220

RIN 1010–AB46

Extension of Time Period for Maintaining Records on Outer Continental Shelf Net Profit Share Oil and Gas Leases

February 15, 1990.

AGENCY: Minerals Management Service (MMS), Interior.

ACTION: Proposed rule.

SUMMARY: The Minerals Management Service (MMS) is proposing to amend its regulations to extend to 6 years, from 36 months, the period an offshore Net Profit Share Lease (NPSL) lessee must maintain records and all other documentation pertaining to the lease capital account. The proposed 6-year period is in accordance with applicable statutory provisions. The MMS is also proposing to remove audit regulations available to NPSL's since these regulations are duplicative and, in some cases, inconsistent with MMS's general audit rules for oil and gas leases.

DATES: Written comments must be received on or before July 9, 1990.

ADDRESSES: Written comments may be mailed to Minerals Management Service, Royalty Management Program, Rules and Procedures Branch, P.O. Box 25165, Mail Stop 662, Denver, Colorado 80225. Attention: Dennis C. Whitcomb.

FOR FURTHER INFORMATION CONTACT: Dennis C. Whitcomb, Chief, Rules and Procedures Branch. (303) 231–3432. (FTS) 326–3432.

SUPPLEMENTARY INFORMATION: The principal authors of this proposed rule are L. Renee Boulette and David A. Hubbard of the MMS Royalty Management Program, Royalty Valuation and Standards Division, Lakewood, Colorado.

I. Background

Regulations regarding accounting procedures for NPSL's on the Outer Continental Shelf were published by the Department of Energy (DOE) on May 30, 1980 (10 CFR part 390). The authority for administering the NPSL accounting regulations was revested in the Secretary of the Interior (Secretary) in December 1981 (Pub. L. 97–100). On January 11, 1983 (48 FR 1182), these regulations were transferred to the Department of the Interior, MMS, and redesignated as 30 CFR part 261. On August 5, 1983, 30 CFR part 261 was renumbered 30 CFR part 220 (48 FR 35642).

Other than minor administrative changes, MMS's version of the NPSL accounting regulations in 30 CFR part 220 is identical to DOE's original rules in 10 CFR part 390. Both provide that ledger cards showing the charges and credits to the NPSL capital account must be maintained until 36 months after the cessation of NPSL operations by the lessee, that all other documents, journals, and records must be maintained for 36 months from the due date or date of mailing of the statement of account on an NPSL, whichever comes later, and that the Department has the right to initiate an audit any time within 36 months of the due date of the statement to be audited or the date it was mailed, whichever is later.

The time periods for record maintenance in the rules originally issued by DOE and later transferred to the Department are inconsistent with statutory requirements for record maintenance on all Federal and Indian oil and gas leases, including leases on the Outer Continental Shelf. Section 103 of the Federal Oil and Gas Royalty Management Act of 1982 (FOGRMA), 30 U.S.C. 1713 "Required Recordkeeping," states:

(a) A lessee, operator, or other person directly involved in developing, producing, transporting, purchasing, or selling oil or gas subject to this Act through the point of first sale or the point of royalty computation, whichever is later, shall establish and maintain any records, make any reports, and provide any information that the Secretary may, by rule, reasonably require for the purposes of implementing this Act or determining compliance with rules or orders under this Act. Upon the request of any officer or employee duly designated by the Secretary or any State or Indian tribe conducting an audit or investigation pursuant to this Act, the appropriate records, reports, or information which may be required by this section shall be made available for inspection and duplication by such officer or employee, State, or Indian Tribe.

(b) Records required by the Secretary with respect to oil and gas leases from Federal or Indian lands or the Outer Continental Shelf shall be maintained for 6 years after the records are generated unless the Secretary notifies the record holder that he has initiated an audit or investigation involving such records and that such records must be

maintained for a longer period. In any case when an audit or investigation is underway, records shall be maintained until the Secretary releases the record holder of the obligation to maintain such records.

These provisions of FOGRMA apply to records generated with respect to NPSL's. Section 3(5) of FOGRMA, 30 U.S.C. 1702, defines the term "lease" to include "any * * * profit share arrangement * * * issued or approved by the United States under a mineral leasing law that authorizes exploration for, extraction of, or removal of oil and gas."

The MMS regulations at 30 CFR 212.50, "Required recordkeeping and reports," issued after FOGRMA's enactment, state:

All records pertaining to offshore and onshore Federal and Indian oil and gas leases shall be maintained by a lessee, operator, revenue payor, or other person for 6 years after the records are generated unless the recordholder is notified, in writing, that records must be maintained for a longer period. When an audit or investigation is underway, records shall be maintained until the recordholder is released by written notice of the obligation to maintain records.

Paragraphs (a) and (b) of MMS regulations at 30 CFR 212.51 "Records and files maintenance" state:

(a) Each lessee, operator, revenue payor, or other person shall make and retain accurate and complete records necessary to demonstrate that payments of rentals, royalties, net profit shares, and other payments related to offshore and onshore Federal and Indian oil and gas leases are in compliance with lease terms, regulations, and orders. Records covered by this section includes those specified by lease terms, notices and orders, and by the various parts of this chapter. Records also include computer programs, automated files, and supporting systems documentation used to produce automated reports or magnetic tape submitted to the Minerals Management Service (MMS) for use in its Auditing and Financial System (AFS) and Production Accounting and Auditing System (PAAS).

(b) Lessees, operators, revenue payors, or other persons required to keep records under this section shall maintain and preserve them for 6 years from the day on which the relevant transaction recorded occurred unless the Secretary notifies the record holder of an audit or investigation involving the records and that they must be maintained for a longer period. When an audit or investigation is underway, records shall be maintained until the recordholder is released in writing from the obligation to maintain the records. Lessees, operators, revenue payors, or other persons shall maintain the records generated during the period for which they have paying or operating responsibility on the lease for a period of 6 years.

II. Proposed Rule

The NPSL accounting procedures were developed by DOE prior to the passage of FOGRMA and the implementation of regulations concerning related recordkeeping requirements. Therefore, MMS is proposing to amend its regulations at 30 CFR 220.030 to conform the record maintenance requirements with FOGRMA's provisions. Accordingly, the proper period of time for maintaining records on NPSL's would be 6 years and 30 CFR 220.030 is proposed to be amended correspondingly. Further, the wording of 30 CFR 220.030 is proposed to be modified to conform with the recordkeeping language of FOGRMA and 30 CFR 212.50 and 212.51.

Likewise, the existing language at 30 CFR 220.033 (Audits) conflicts with the recordkeeping requirements of FOGRMA and the corresponding regulations at 30 CFR 212.50 and 212.51. Many other modifications would also be needed to make the language of 30 CFR 220.033 consistent with general Department and MMS audit policy and procedure. Rather than make such detailed changes at this time, MMS is proposing to delete 30 CFR 220.033 in its entirety because 30 CFR 217.50 already is applicable to all oil and gas audits, including audits of NPSL's. Further, 30 CFR part 217, Audits and Inspections, currently is being rewritten in its entirety, and the audit requirements for NPSL's will be incorporated therein.

The policy of the Department is, whenever practicable, to afford the public an opportunity to participate in the rulemaking process. Accordingly, interested persons may submit written comments, suggestions, or objections regarding the proposed amendment to the location identified in the **ADDRESSES** section of the preamble. Comments must be received before the day specified in the **DATES** section of this preamble.

III. Procedural Matters

Executive Order 12291 and the Regulatory Flexibility Act

The rule is necessary to make the regulations comply with the provisions of FOGRMA. Therefore, the Department has determined that this rulemaking is not a major rule under Executive Order 12291 and certifies that this document will not have a significant economic effect on a substantial number of small entities under the Regulatory Flexibility Act (5 U.S.C. 601 *et seq.).*

Executive Order 12630

Because the rule has no cost impact, the Department certifies that the rule does not represent a governmental action capable of interference with constitutionally protected property rights. Thus, a Takings Implication Assessment need not be prepared pursuant to Executive Order 12630, "Government Action and Interference with Constitutionally Protected Property Rights."

Paperwork Reduction Act of 1980

The collections of information contained in this rule have been approved by the Office of Management and Budget under 44 U.S.C. 3501 et seq. and assigned clearance number 1010–0073.

The public reporting burden for this collection of information is estimated to be about 16 hours for each annual and monthly lease report, including the time for reviewing instructions, searching existing data sources, gathering and maintaining the data needed, and completing and reviewing the collection of information. Send comments regarding the burden estimate or any other aspect of this collection of information, including suggestions for reducing the burden, to the Information Collection Clearance Officer, Mail Stop 2300, Minerals Management Service, 381 Eldon Street, Herndon, VA 22070; the Office of Information and Regulatory Affairs, Office of Management and Budget, Paperwork Reduction Project 1010–0073, WAshington, DC 20503.

National Environmental Policy Act of 1969

It is hereby determined that this rulemaking does not constitute a major Federal action significantly affecting the quality of the human environment and a detailed statement pursuant to section 102(2)(C) of the National Environmental Policy Act of 1969 (42 U.S.C. 4332(2)(C)) is not required.

List of Subjects in 30 CFR Part 220

Accounting, Coal, Continental shelf, Geothermal energy, Government contracts, Minerals royalties, Natural gas, Petroleum, Public lands-mineral resources, Reporting and recordkeeping requirments.

Dated: April 24, 1990.

James M. Hughes,

Acting Assistant Secretary—Land and Minerals Management.

For the reasons set out in preamble, 30 CFR part 220 is proposed to be amended as follows:

PART 220—ACCOUNTING PROCEDURES FOR DETERMINING NET PROFIT SHARE PAYMENT FOR OUTER CONTINENTAL SHELF OIL AND GAS LEASES

1. The authority citation for part 220 continues to read as follows:

Authority: Sec. 205, Pub. L. 95–372, 92 Stat. 643 (43 U.S.C. 1337).

2. Paragraph (b) of § 220.030 is revised to read as follows:

§ 220.030 Maintenance of records.

* * * * *

(b) All records pertaining to NPSL capital accounts shall be maintained by a lessee for 6 years after the records are generated unless the Secretary of the Interior (Secretary) or designee notifies the record holder that MMS has initiated an audit or investigation involving such records and that such records must be maintained for a longer period. In any case, when an audit or investigation is underway, records shall be maintained until the Director releases the record holder of the obligation to maintain such records.

§ 220.033 [Removed; new § 220.033 redesignated from § 220.034]

3. The existing § 220.033 is removed.

§ 220.034 [Redesignated as § 220.033]

4. Section 220.034 is redesignated as a new § 220.033.

5. Paragraph (a) of the new § 220.033 (redesignated from § 230.034) is revised to read as follows:

§ 220.033 Redetermination and appeals.

(a) If, as a result of an inspection of records or an audit, the Director or designee determines that there is an error in the NPSL capital account or an error in calculating the net profit share payment, whether in favor of the Government or the lessee, the Director or designee shall redetermine the net profit share base and recalculate the net profit share payment due the United States and notify the lessee of the recalculation.

* * * * *

[FR Doc. 90–13203 Filed 6–6–90; 8:45 am]

BILLING CODE 4310-MR-M

DEPARTMENT OF TRANSPORTATION

Coast Guard

33 CFR Part 165

[CGD1 90–018]

Safety Zone: East Passage, Lower Narragansett Bay

AGENCY: Coast Guard, DOT

ACTION: Notice of proposed rule making.

SUMMARY: The Coast Guard is considering a proposal to establish two temporary safety zones on Saturday September 15, 1990 in the East Passage of lower Narragansett Bay. These temporary Safety Zones will only be in effect while an around-the-world single-handed yacht race, the BOC Challenge, is commencing. The BOC Challenge is a 27,000 mile single-handed around-the-world yacht race. Entry into these two safety zones is prohibited unless authorized by the Captain of the Port, Providence, Rhode Island.

DATES: Comments must be received on or before July 23, 1990.

ADDRESSES: Comments should be mailed to Captain of the Port U.S. Coast Guard Marine Safety Office, John O. Pastore Fed. Bldg., Providence, RI 02903–1790. The comments and other materials referenced in this notice will be available for inspection and copying at the above address. Normal office hours are between 8:00 a.m. and 4:00 p.m. Monday through Friday, except holidays. Comments may also be hand delivered to this address.

FOR FURTHER INFORMATION CONTACT: LT. M.P. O'Malley, USCG, C/0 Captain Of The Port, U.S. Coast Guard Marine Safety Office, John O. Pastore Fed. Bldg., Providence, R.I. 02903–1790, telephone (401) 528–5335.

SUPPLEMENTARY INFORMATION: Interested persons are invited to participate in this rulemaking by submitting written views, data or arguments. Persons submitting comments should include their names and addresses, identify this notice by (CGD1 90–018) and the specific section of the proposal to which their comments apply, and give reasons for each comment.

The regulations may be changed in light of the comments received. All comments received before the expiration of the comment period will be considered before final action is taken on this proposal. No public hearing is planned, but one may be held if written requests for a hearing are received and it is determined that the opportunity to make oral presentations will aid the rulemaking process.

Drafting Information

The drafters of this regulation are LIEUTENANT M.P. O'MALLEY, project officer for the Captain of the Port, and LIEUTENANT R.E. KORROCH, project attorney, for the First Coast Guard District Legal Office.

Discussion of Proposed Regulations

On September 15, 1990 the Captain of the Port Providence, RI is considering establishing a temporary safety zone in the East Passage of lower Narragansett Bay in the vicinity west of Fort Adams, Newport RI, to Bull Pt., Jamestown RI, from 10 a.m. to 1:30 p.m. An additional temporary moving safety zone is being considered for the vicinity around participating vessels south of Castle Hill, Newport, R.I. to Brenton Reef Tower from 12 p.m. to 2 p.m. These safety zones will be in effect only while the vessels involved in the BOC Challenge are starting the around-the-world race. These safety zones are intended to protect the public and the participants from hazards associated with the start of the race.

Entry into these zones will be prohibited unless authorized by the Captain of the Port, Providence, Rhode Island. This regulation is issued pursuant to 33 U.S.C. 1225 and 1231 as set out in the authority citation for all of part 165.

Economic Assessment and Certification

These regulations are considered to be non-major under Executive Order 12291 on Federal Regulation and nonsignificant under Department of Transportation regulatory policies and procedures (44 FR 11034; February 26, 1979).

The economic impact has been found to be so minimal that a full regulatory evaluation is unnecessary. Since the impact of these regulations is expected to be minimal the Coast Guard certifies that they will not have a significant economic impact on a substantial number of small entities.

List of Subjects in 33 CFR Part 165

Harbors, Marine safety, Navigation (water), Security measures Vessels, Waterways.

Proposed Regulations

In consideration of the foregoing, part 165 of title 33, Code of Federal Regulations, is amended as follows:

PART 165—[AMENDED]

1. The authority citation for part 165 continues to read as follows:

Authority: 33 U.S.C. 1225 and 1231; 50 U.S.C 191; 49 CFR 1.46 and 33 CFR 1.05–1(g), 6.04–1, 6.04–6, and 160.5.

2. Section 165.T01–04 is added to read as follows:

§ 165.T01–04 Safety Zone: East Passage, Lower Narragansett Bay.

(a) *Location:* The following areas are established as temporary safety zones:

(1) For the BOC Challenge the waters of Narragansett Bay in the vicinity west of Fort Adams, Newport R.I. to Bull Point, Jamestown, R.I. bounded by a line connecting the following points:

	Latitude	Longitude
Buoy 4	41 28'52"N	71 20'08"W
	41 29'23"N	71 19'54"W
	41 29'25"N	71'20'59"W
Buoy 11	41 28'47"N	71 21"W

(b) *Effective date:* This regulation becomes effective at 10 a.m. on September 15, 1990. It terminates at 2 p.m. September 15, 1990 unless terminated sooner by the Captain of the Port.

(c) *Regulations:* The general regulations governing safety zones contained in § 165.23 apply.

Dated: May 31, 1990.

E.J. Williams, III,

Captain, U. S. Coast Guard, Captain of the Port of Providence, RI.

[FR Doc. 90-13147 Filed 06-06-90; 8:45 am]

BILLING CODE 4910-14-M

ENVIRONMENTAL PROTECTION AGENCY

40 CFR Part 228

[FRL 3785-3]

Ocean Dumping; Proposed Site Designation

AGENCY: U.S. Environmental Protection Agency (EPA).

ACTION: Proposed rule.

SUMMARY: EPA today proposes to designate an Ocean Dredged Material Disposal Site (ODMDS) in the Atlantic Ocean offshore Canaveral Harbor, Florida, as an EPA-approved ocean dumping site for the dumping of suitable dredged material. This action is necessary to provide an acceptable ocean dumping site for consideration as a disposal option for dredged material disposal projects in the greater Canaveral, Florida vicinity.

DATES: Comments must be received on or before July 9, 1990.

ADDRESSES: Send comments to:

Wesley B. Crum, Chief, Wetlands and Coastal Programs Section, Water Management Division, U.S. Environmental Protection Agency, Region IV, 345 Courtland Street, NE., Atlanta, Georgia 30365.

The file supporting this proposed designation is available for public inspection at the following locations:

EPA Public Information Reference Unit (PIRU), Room 2904 (rear), 401 M Street, SW., Washington, DC 20460.

EPA/Region IV, 345 Courtland Street, NE., Atlanta, Georgia 30365.

FOR FURTHER INFORMATION CONTACT: Jeffrey A. Kellam, 404/347-2126.

SUPPLEMENTARY INFORMATION:

Background

Section 102(c) of the Marine Protection, Research, and Sanctuaries Act (MPRSA) of 1972, as amended, 33 U.S.C. 1401 *et seq.* ("the Act"), gives the Administrator of EPA the authority to designate sites where ocean disposal may be permitted. On December 23, 1986, the Administrator delegated the authority to designate ocean disposal sites to the Regional Administrator of the Region in which the sites are located. This proposed designation of a site offhore Canaveral Harbor, Florida, which is within Region IV, is being made pursuant to that authority.

The EPA Ocean Dumping Regulations promulgated under the Act (40 CFR chapter I, subchapter H, § 228.4) state that ocean disposal sites will be designated by promulgation in this part 228. A list of "Approved Interim and Final Ocean Dumping Sites" was published on January 11, 1977 (42 FR 2461 (January 11, 1977). The list established the existing Canaveral Harbor site as an interim site.

EIS Development

Section 102(2)(C) of the National Environmental Policy Act (NEPA) of 1969, as amended, 42 U.S.C. 4321 *et seq.*, requries that Federal agencies prepare an EIS on proposals for legislation and other major federal actions significantly affecting the quality of the human environment.

The object of NRPA is to build careful consideration of all environmental aspects of proposed actions into the agency decison-making process. While NEPA does not apply to EPA activities of this type, EPA has voluntarily committee to prepare EISs in connection with ocean dumping site designations such as this (see 39 FR 16186 (May 7, 1974)). EPA in cooperation with the Jacksonville District of the U.S. Army Corps of Engineers (COE), has prepared a Draft Environmental Impact Statement (DEIS) entitled "Draft Environmental Impact Statement for Designation of Canaveral Harbor, Florida Ocean Dredged Material Disposal Site". This Proposed Rule includes excerpts from the DEIS

The action discussed in the EIS is the permanent designation for continuing use and expansion of the existing interim ocean dredged material disposal site near Canaveral Harbor, Flordia. The purpose of the action is to provide an environmentally acceptable location for ocean disposal. The need for ocean disposal is determined on a case-by-case basis as part of the COE process of issuing permits for ocean disposal for federal and/or private actions.

For the Canaveral Harbor ODMDS, the COE and EPA would evaluate all Federal dredged material disposal projects pursuant to the EPA criteria given in the Ocean Dumping Regulations (40 CFR parts 220-229) and the COE regulations (33 CFR 209.120 and 209.145). The COE also issues MPRSA permits to private applicants for the transport of dredged material intended for disposal after compliance with these regulations is determined. EPA has the right to disapprove any ocean disposal project if, in its judgment, all provisions of MPRSA and the associated implementing regulations have not been met. State permitting would not be needed for the Canaveral Harbor ODMDS since the disposal site is located outside of State of Florida waters.

On August 14, 1987, the Notice of Availability of the DEIS for public review and comment was published in the **Federal Register** (ER FRL-3247-9 (August 14, 1987)). The public comment period on the draft EIS closed on September 28, 1987.

The Final EIS (FEIS) will be published aftere this Proposed Rule appears in the **Federal Register**. The FEIS is projected for July 1990 publication. The Final Rule to designate the Canaveral Harbor ODMDS is scheduled for publication after the end of the 30-day comment period for the FEIS.

Public comments on the DEIS will be addressed in the FEIS. Any comments on the Proposed Rule and the FEIS will be addressed in the Final Rule, or reference will be made on the FEIS responses.

The EIS discusses the need for this site designation and examines ocean disposal site alternatives to the proposed action. The need for ocean disposal is determined on a case-by-case basis as a part of the process of permitting for ocean disposal. The EIS presents the information needed to evaluate the suitability of ocean disposal areas for final designation use and is based on one of a series of disposal site environmental studies. The environmental studies and final designation are being conducted in accordance with the requirements of the MPRSA, the Ocean Dumping Regulations, and other applicable federal environmental legislation.

EPA has evaluated the proposed site designation for consistency with the State of Florida (the State) approved coastal management program. EPA has

determined that the designation of the proposed site is consistent to the maximum extent practicable with the State coastal management program, and has submitted this determination to the State for review in accordance with EPA policy. In addition, as part of the NEPA process, EPA has consulted with the State regarding the effects of the dumping at the proposed site on the State coastal zone. EPA has taken the State's comments into account in preparing the FEIS for the site, in determining whether the proposed site should be designated, and in determining whether restrictions or limitations should be placed on the use of the site, if it is designated.

Concerns raised by the state of Florida on CZM consistency, regarding use of suitable material for beach nourishment, were addressed in the FEIS. EPA concurs with the state of Florida regarding the use of suitable material for such nourishment, in circumstances where this use is practical.

Pursuant to section 7 of the Endangered Species Act, the National Marine Fisheries Service (NMFS) and the U.S. Fish and Wildlife Service (FWS) were asked by EPA to concur with EPA's conclusion that this site designation will not affect the endangered species under their jurisdictions. In a letter dated October 8, 1987, NMFS concurred with EPA's determination that designation of this disposal site will not affect the endangered species under their jurisdiction. This concurrence was confirmed in an additional letter dated March 12, 1990. The U.S. Fish and Wildlife Service, in a letter dated August 27, 1987, has also concurred that species under their jurisdiction will not be affected by the designation. EPA accepted comments on the DEIS during the 45-day NEPA review period. These comments are addressed in the FEIS. Similarly, EPA will accept public comments on the Proposed Rule during its 30-day review period and will address them in the Final Rule, and or refer to the FEIS for similar comments.

Proposed Site Designation

The proposed site is located east of Canaveral, Florida, approximately 3.2 nautical miles (nmi) offshore and occupies an area of about 4 square nautical miles (nmi ^{2}), approximately 2 nmi by 2 nmi. Water depths within the area range from 38 to 53 feet. The coordinates (based on North American Datum 1927) of the Canaveral Harbor site proposed for final designation are as follows:

28°20'15" N., 80°31'11" W;
28°18'51" N., 80°29'15" W;
28°17'31" N., 80°30'53" W; and
28°18'36" N., 80°32'45" W;

Center coordinates are 28°18'44" N and 80°31'00" W.

Regulatory Requirements

Pursuant to the Ocean Dumping Regulations, 40 CFR part 228, five general criteria are used in the selection and approval for continuing use of ocean disposal sites. Sites are selected so as to minimize interference with other marine activities, to prevent any temporary perturbations associated with the disposal from causing impacts outside the disposal site, and to permit effective monitoring to detect any adverse impacts at an early stage. Where feasible, locations off the Continental Shelf and other sites that have been historically used are to be chosen. If, at any time, disposal operations at a site cause unacceptable adverse impacts, further use of the site will be restricted or terminated. The proposed site conforms to the five general criteria, except for the preference for sites located off the Continental Shelf. EPA has determined, based on the information presented in the EIS, that no environmental benefit would be obtained by selecting a site off the Continental Shelf instead of that proposed in this action.

The general criteria are given in § 228.5 of the EPA Ocean Dumping Regulations, and § 228.6 lists the 11 specific criteria used in evaluating a proposed disposal site to assure that the general criteria are met. Application of these 11 criteria constitutes an environmental assessment of the impact of disposal at the site. The characteristics of the proposed site are reviewed below in terms of these 11 criteria.

1. Geographical position, depth of water, bottom topography, and distance from coast (40 CFR 228.6(a)(1))

The coordinates of the site are given above. The proposed site is located about 3.2 nmi offshore of Canaveral Harbor, Florida. The site is approximately 2 nmi by 2 nmi. The bottom topography is featureless with a gentle slope downward to the southeast. Water depth in the area ranges from 38 to 53 feet.

The configuration of the candidate site, as proposed in the DEIS, only partially included the existing interim site. The site has been re-configured in the FEIS to completely encompass the interim site, consistent with 40 CFR 228.5(e) of the general criteria of the Ocean Dumping Regulations.

2. Location in relation to breeding, spawning, nursery, feeding, or passage areas of living resources in adult or juvenile phases (40 CFR 228.6(a)(2))

Many of the area's species spend their adult lives in the offshore region, but are estuary-dependent because their juvenile stages use a low salinity estuarine nursery region. Specific migration routes are not known in the Canaveral area. But, the candidate site is not near the mouth of an estuary and thus should not encumber migratory passage. The site is not known to be located in any major breeding or spawning area, except for sea turtles which uses the entire beach area of eastern Florida as nesting habitat. Due to the motility of finfish, it is unlikely the disposal activities will have any significant impact on any of the species found in the area.

3. Location in relation to beaches and other amenity areas (40 CFR 228.6(a)(3))

The candidate site is located at least 3.2 nautical miles from the coast. Shore-related amenities include Canaveral National Seashore, Merritt Island National Wildlife Refuge, Banana River Aquatic Preserve, and the Kennedy Space Center. Currents in the vicinity trend alongshore in a general north-south orientation. It is therefore unlikely that detectable quantities of dredged material will be transported onto beaches. Considering the distance that the proposed disposal site is offshore beach areas, dredged material disposal at the site is not expected to have an effect on the recreational uses of these beaches.

4. Types and quantities of wastes proposed to be disposed of, and proposed methods of release, including methods of packing the waste, if any (40 CFR 228.6(a)(4))

It is anticipated that the candidate site will be used primarily for disposal of maintenance material from the Port Canaveral Channel and Turning Basins. Estimated annual volumes are expected to average 0.8 million cubic yards. Disposed material is expected to be composed primarily of fine grain sediments. Future disposal at the site will presumably be similiar to that of past disposal. However, each disposal plan must be evaluated on a case-by-case basis to ensure that ocean disposal is the best alternative and that the material meets the Ocean Dumping Criteria in 40 CFR part 227.

5. Feasibility of surveillance and monitoring (40 CFR 228.6(a)(5))

Due to the proximity of the site to shore, surveillance and monitoring will not be difficult. Survey vessels, dredges or aircraft overflights are feasible surveillance methods. Environmental studies relative to the EIS have been conducted at the site to establish baseline conditions. A site-specific management and monitoring plan was developed for the Canaveral Harbor ODMDS. This plan establishes a sequence of monitoring surveys to be undertaken to determine any impacts resulting from disposal activities. These surveys may include bathymetry, sediment tracking, benthic faunal analyses, bottom video photography and side scan sonar surveys.

6. Dispersal, horizontal transport and vertical mixing characteristics of the area including prevailing current direction and velocity, if any (40 CFR 228.6(a)(6))

Currents in the area are mainly wind driven. Net current flow is alongshore with the direction of movement related to season. Measurement of current direction trends at the candidate site showed approximately 45% of the currents moving north-northeast and 26% trending south-southwest. Current speeds normally range around 0.1 to 0.4 knot. No conclusive statement can be made regarding sediment transport, however, the following general assumption can be presumed to be a reasonable scenario. The majority of the coarse dredged material sinks rapidly to the bottom during disposal via entrainment and considering the relatively shallow depths of the site. However, transport of fine grain dredged material in the water column will occur in the form of a turbidity plume. Fine material in such plumes is expected to disperse and dilute rather rapidly.

7. Existence and effects of current and previous discharges and dumping in the area (including cumulative effects) (40 CFR (a)(7))

Site environmental studies cited in the EIS have detected no significant adverse effects from previous disposal operations in terms of water quality, finfish and shellfish species and abundance, and benthic community diversities and densities.

Short-term effects attributed to site use include: water quality changes, smothering of benthic species, and possible mounding of dredged material. Water quality parameters would likely rather rapidly return to ambient levels following disposal operations through dispersion/dilution. Studies have shown no significant adverse water quality effects.

8. Interference with shipping, fishing, recreation, mineral extraction, desalination, fish and shellfish culture, areas of special scientific importance and other legitimate uses of the ocean (40 CFR 228.6(a)(8))

Shipping and recreational and commercial fishing, while not heavy, do occur in the vicinity of the proposed site. Past intermittent use of the site for disposal operations is not known to have interfered with the shipping activities in and out of Canaveral Harbor and therefore has not substantively contributed to congestion within the shipping channels. Other than periodic use by hopper dredges or towed barges on trips to and from the disposal area, the site and its use should not interfere with shipping or commercial fisheries activities.

Effects on commercial or recreational fishing due to past use of the site have presumably been limited since the proposed site represents a small portion of the total fishing area in the Canaveral vicinity.

Mineral extraction, desalination, fish or shellfish culture and other scientific use of the ocean are not known to occur in the vicinity of the site. Potential future mineral exploration or extraction should not be hindered by activities associated with the candidate site.

9. The existing water quality and ecology of the site as determined by available data or by trend assessment or baseline surveys (40 CFR 228.6(a)(9))

Investigations of previous disposal effects indicated no significant adverse effects on water quality parameters such as dissolved nutrients, trace metals, dissolved oxygen, and pH.

Water quality in the region is mostly under the influence of the open ocean and salinities seldom drop much below 34 ppt. With the exception of suspended solids (ie turbidity) values for water quality obtained from samples taken during baseline surveys were well within the limits of applicable water quality standards.

The ecology of the site is typical of coastal habitat in the vicinity. The bottom sediments at the proposed site are predominantly fine-grained sands with varying amounts of clay, silt and medium to coarse sand. Commercially important species supported by this habitat include shrimp, crab, seatrout, silver perch, croaker, and drum.

No critical habitat or unique ecological communities have been identified at the candidate site. Buffer zone protection has been applied to any existing fish havens, artificial reef communities, turtle nesting areas, and onshore amenities in the general region of the site.

10. Potentiality for the development or recruitment of nuisance species in the disposal site (40 CFR 228.6(a)(10))

It is unlikely that use of the proposed site will result in the development or recruitment of any nuisance species. Past disposal operations have apparently not led to development or recruitment of nuisance species.

11. Existence at or in close proximity to the site of any significant natural or cultural features of historical importance (40 CFR 228.6(a)(11))

No historical features have been identified within the proposed site. The candidate site is at least four nautical miles from any identified wrecks-at-sea which may or may not be of historical importance.

Site Management

Site management of the Canaveral Harbor ODMDS is the responsibility of EPA as well as the COE. The COE issues permits to private applicants for ocean disposal; however, EPA/Region IV assumes overall responsibility for site management.

A Site Management and Monitoring Plan was developed as a part of the process of completing the EIS This plan provides the approach for both site management and for the monitoring of effects of disposal activities.

Proposed Action

The designation of the Canaveral Harbor site as an EPA-approved ODMDS is being published as Proposed Rulemaking. Overall management of this site is the responsibility of the Regional Administrator of EPA/Region IV.

It should be emphasized that, if an ODMDS is designated, such a site designation does not constitute EPA's approval of actual disposal of material at sea. Before ocean disposal of dredged material at the site may commence. the COE must evaluate a permit application according to EPA's Ocean Dumping Criteria, or complete a public review process for their proposed actions. EPA has the right to disapprove the actual dumping if it determines that environmental concerns under the Act have not been met.

The Canaveral Harbor ODMDS is not restricted to disposal use by federal projects; private applicants may also dispose suitable dredged material at the

ODMDS once relevant regulations have been satisfied. This site is restricted, however, to suitable dredged material from the greater Canaveral, Florida vicinity.

Regulatory Assessments

Under the Regulatory Flexibility Act, EPA is required to perform a Regulatory Flexibility Analysis for all rules that may have a significant impact on a substantial number of small entities. EPA has determined that this action will not have a significant impact on small entities since the designation will only have the effect of providing a disposal option for dredged material. Consequently, this Rule does not necessitate preparation of a Regulatory Flexibility Analysis.

Under Executive Order 12291, EPA must judge whether a regulation is "major" and therefore subject to the requirement of a Regulatory Impact Analysis. This action will not result in an annual effect on the economy of $100 million or more or cause any of the other effects which would result in its being classified by the Executive Order as a "major" rule. Consequently, this Proposed Rule does not necessitate preparation of a Regulatory Impact Analysis.

This Proposed Rule does not contain any information collection requirements subject to Office Management and Budget review under the Paperwork Reduction Act of 1980, 44 U.S.C. 3501 *et seq.*

List of Subjects in 40 CFR Part 228

Water pollution control.

Dated: May 29, 1990.

Approved by:

Joseph R. Franzmathes,

Acting Regional Administrator.

In consideration of the foregoing, subchapter H of chapter I of title 40 is proposed to be amended as set forth below.

PART 228—[AMENDED]

1. The authority citation for part 228 continues to read as follows:

Authority: 33 U.S.C. sections 1412 and 1418.

2. Part 228 is proposed to be amended by removing from § 228.12(a)(3) the entry for "Canaveral Harbor" and adding to § 228.12(b)(86), one ODMDS for Region IV as follows:

§ 228.12 Delegation of management authority for interim ocean dumping sites.

* * * * *

(b) * * *

( ) Canaveral Harbor, Canaveral, Florida; Ocean Dredged Material Disposal Site _____ Region IV.

Location:
28°20'15" N 80°31'11" W;
28°18'51" N 80°29'15" W;
28°17'13" N 80°30'53" W; and
28°18'36" N 80°32'45" W.

Center coordinates are 28°18'44" N and 80°31'00" W (NAD 27).

Size: 4 square nautical miles.

Depth: Range 38 to 53 feet

Primary use: Dredged material.

Period of use: Continuing use.

Restriction: Disposal shall be limited to suitable dredged material from the greater Canaveral, Florida vicinity.

[FR Doc. 90-13248 Filed 6-6-90; 8:45 am]

BILLING CODE 6560-50-M

FEDERAL COMMUNICATIONS COMMISSION

47 CFR Parts 21, 43, 74, 78, and 94

[Gen. Docket Nos. 90-54 and 80-113; DA 90-797]

Multipoint Distribution Service, Multichannel Multipoint Distribution Service, Instructional Television Fixed Service, Private Operational-Fixed Microwave Service, and Cable Television Relay Service; Use of the Frequencies in the 2.1 and 2.5 GHz Bands

AGENCY: Federal Communications Commission.

ACTION: Proposed rule; extension of reply comment period.

SUMMARY: The Commission, at the request of the Wireless Cable Association, Inc., extends the period for filing reply comments in this proceeding, regarding the use of certain TV and radio frequencies in the 2.1 and 2.5 GHz bands, from June 6, 1990 to June 20, 1990. A previous Order extending the comment and reply periods in this proceeding may be found at 55 FR 18454 (May 2, 1990) and the originating Notice of Proposed Rule Making and Notice of Inquiry is at 55 FR 7344 (March 1, 1990). The current action is taken to provide the Commission with a comprehensive, accurate, and extensive record on which to base a final decision.

DATES: Reply comments must be submitted on or before June 20, 1990.

ADDRESSES: Federal Communications Commission, Washington, DC 20554.

FOR FURTHER INFORMATION CONTACT: Bruce Romano, Mass Media Bureau, (202) 632-5414.

SUPPLEMENTARY INFORMATION:

Order Extending Time for Filing Reply Comments

Adopted: June 5, 1990.

Released: June 5, 1990.

By the Chief, Mass Media Bureau.

1. The Commission grants the request of the Wireless Cable Association, Inc. (WCA) for an extension of the reply comment deadline in the above-captioned proceeding to June 20, 1990. The Commission adopted a Notice of Proposed Rule Making and Notice of Inquiry (*Notice*)[1] in this proceeding on February 8, 1990, establishing a comment deadline of April 23, 1990, and a reply comment deadline of May 23, 1990. These deadlines were extended in a later decision (5 FCC Rcd 2730, 1990) to May 7, 1990, for comments and June 6, 1990, for reply comments.

2. WCA seeks a further extension of the reply comment period because of the complexity of the issues involved in the proceeding, and because of the number and variety of interests commenting in response to the *Notice*. The Commission grants the request in order to establish the most comprehensive record possible on which to base a decision. A further extension of the reply comment date is not contemplated.

3. Accordingly, *it is ordered* that the date for filing reply comments in the above-captioned proceeding *is extended* to and including June 20, 1990.

4. This action is taken pursuant to authority found in sections 4(i), 4(j), 303(r) of the Communications Act of 1934, as amended, and §§ 0.61 and 0.283 of the Commission's Rules.

5. For further information concerning this proceeding, contact Bruce Romano, Policy and Rules Division, Mass Media Bureau, (202) 632-5414.

Federal Communications Commission.

Roy J. Stewart,

Chief, Mass Media Bureau.

[FR Doc. 90-13336 Filed 6-6-90; 8:45 am]

BILLING CODE 6712-01-M

---

[1] See *Notice of Proposed Rule Making and Notice of Inquiry* in Gen. Docket No. 90-54 and Gen. Docket No. 80-113, FCC 90-60, 5 FCC Rcd 971 (1990).

Notices

Federal Register
Vol. 55, No. 110
Thursday, June 7, 1990

This section of the FEDERAL REGISTER contains documents other than rules or proposed rules that are applicable to the public. Notices of hearings and investigations, committee meetings, agency decisions and rulings, delegations of authority, filing of petitions and applications and agency statements of organization and functions are examples of documents appearing in this section.

ADVISORY COUNCIL ON HISTORIC PRESERVATION

Meetings

AGENCY: Advisory Council on Historic Preservation.

ACTION: Notice of meeting.

SUMMARY: Notice is hereby given that the Advisory Council on Historic Preservation will meet on Tuesday, June 19, 1990. The meeting will be held in the Leeward Room at the Seattle Hilton, Sixth and University, Seattle, Washington, beginning at 8:30 a.m.

The Council was established by the National Historic Preservation Act of 1966 (16 U.S.C. 470) to advise the President and the Congress on matters relating to historic preservation and to comment upon Federal, federally assisted, and federally licensed undertakings having an effect upon properties listed in or eligible for inclusion in the National Register of Historic Places. The Council's members are the Architect of the Capitol; the Secretaries of the Interior, Agriculture, Housing and Urban Development, Treasury, and Transportation; the Director, Office of Administration; the Chairman of the National Trust for Historic Preservation; the President of the National Conference of State Historic Preservation Officers; a Governor; a Mayor; and eight non-Federal members appointed by the President.

The agenda for the meeting includes the following:

I. Chairman's Welcome/Opening
II. Council Business
III. Executive Director's Report
IV. Section 106 Cases
V. New Business
VI. Adjourn

Note: The meetings of the Council are open to the public. If you need special accommodations due to a disability, please contact the Advisory Council on Historic Preservation, 1100 Pennsylvania Avenue NW., room 809, Washington, DC, 202-786-0503, at least seven (7) days prior to the meeting.

FOR FURTHER INFORMATION CONTACT: Additional information concerning the meeting is available from the Executive Director, Advisory Council on Historic Preservation, 1100 Pennsylvania Avenue NW., #809, Washington, DC 20004.

Dated: June 4, 1990.

[FR Doc. 90-13206 Filed 6-6-90; 8:45 am]

BILLING CODE 4310-10-M

DEPARTMENT OF AGRICULTURE

Forms Under Review by Office of Management and Budget

June 1, 1990.

The Department of Agriculture has submitted to OMB for review the following proposals for the collection of information under the provisions of the Paperwork Reduction Act (44 U.S.C. chapter 35) since the last list was published. This list is grouped into new proposals, revisions, extensions, or reinstatements. Each entry contains the following information:

(1) Agency proposing the information collection; (2) Title of the information collection; (3) Form number(s), if applicable; (4) How often the information is requested; (5) Who will be required or asked to report; (6) An estimate of the number of responses; (7) An estimate of the total number of hours needed to provide the information; (8) An indication of whether section 3504(h) of Pub. L. 96-511 applies; (9) Name and telephone number of the agency contact person.

Questions about the items in the listing should be directed to the agency person named at the end of each entry. Copies of the proposed forms and supporting documents may be obtained from: Department Clearance Officer, USDA, OIRM, room 404-W Admin. Bldg., Washington, DC 20250, (202) 447-2118.

New Collection

- *Animal and Plant Health Inspection Service*

Poultry Affected by Salmonella Enteritidis, VS 20-1, SE 20-2 and 20-3, APHIS 8004.
On occasion, State or local governments; Farms; Federal agencies or employees; 612,600 responses; 48,755 hours; not applicable under 3504(h).
Ron Day (301) 436-7737.

- *Cooperative State Research Service*

Higher Education Challenge Grants Program, CSRS-711.
Annually.
Non-profit institutions; 600 responses; 6,600 hours; not applicable under 3504(h).
Louise Ebaugh (202) 447-7854.

Donald E. Hulcher,
Acting Departmental Clearance Officer.

[FR Doc. 90-13157 Filed 6-6-90; 8:45 am]

BILLING CODE 3410-01-M

Forest Service

Interim Standards and Guidelines for the Protection and Management of RCW Habitat Within ¾ Mile of Colony Sites

AGENCY: Forest Service, USDA.

ACTION: Notice of a decision notice and finding of no significant impact.

SUMMARY: On May 9, 1990, the Southern Regional Forester signed a decision notice amending affected National Forest land and resource management plans with interim standards and guidelines for the protection and management of the red-cockaded woodpecker (RCW). A modified alternative 3 was selected as the interim standards and guidelines from 5 alternatives analyzed in the January 1990 environmental assessment (EA). This alternative provides additional protection and management of RCW habitat within ¾ mile of RCW colony sites on National Forest System lands to the existing Forest plan standards and guidelines for RCW. The January 1990 EA was distributed for public and other public agency review and comment. Comments received were considered by the Regional Forester in making this decision. A biological evaluation was prepared for all alternatives and it was determined that alternative 3 is not likely to adversely affect any threatened or endangered species including RCW. The USDI Fish and Wildlife Service concurred with this determination. The decision will be implemented on May 25, 1990, and is appealable.

Pursuant to section 102(2)(2) of the National Environmental Policy Act of 1969 and the Council on Environmental

Quality Guidelines (40 CFR 1508.27), the Forest Service gives notice, through the finding of no significant impact, that actions allowed under alternative 3 (as modified) are not a major federal action and will not significantly affect, either individually or cumulatively, the quality of human environment. Therefore, an environmental impact statement is not being prepared.

DATES: Implementation of the Decision will begin on May 25, 1990.

ADDRESSES: The decision notice, finding of no significant impact, and environmental assessment may be reviewed at the Southern Regional Office for the Forest Service at 1720 Peachtree Road NW., Atlanta, GA 30367. Copies of these documents are available upon request from this office.

FOR FURTHER INFORMATION CONTACT: David P. Smith, RCW EIS Team Leader, 1720 Peachtree Road NW., Atlanta, GA, 30367. Phone no. (404) 347-4338.

Dated: June 1, 1990.

Marvin C. Meier,

Deputy Regional Forester.

[FR Doc. 90-13216 Filed 6-6-90; 8:45 am]

BILLING CODE 3410-11-M

Sugar Bowl Ski Resort Expansion Project, Tahoe National Forest, Placer and Nevada Counties, CA

AGENCY: Forest Service, USDA.

ACTION: Revised notice of intent to prepare an environmental impact statement.

SUMMARY: The Department of Agriculture, Forest Service, Tahoe National Forest, is preparing an environmental impact statement (EIS) for a master development plan proposal to expand the existing Sugar Bowl Ski Resort. The Notice of Intent to prepare an Environmental Impact Statement was published in the **Federal Register** on May 3, 1989 (54 FR 18917). A Revised Notice of Intent was published on January 5, 1990 (54 FR 452). The Revised Notice announced that a draft environmental impact statement (DEIS) would be available for review in April 1990. The DEIS is now expected to be available in July 1990.

Pursuant to Article 14 of the California Environmental Quality Act, Placer County plans to use the final EIS prepared by the Forest Service as an Environmental Impact Report (EIR) equivalent for that portion of the proposal that is within their jurisdiction.

FOR FURTHER INFORMATION CONTACT: Questions about the proposed action and environmental impact statement should be directed to Rick Maddalena or Bob Moore, Truckee Ranger District, P.O. Box 399, Truckee, CA 95734, phone (916) 587-3558.

Dated: May 30, 1990.

William P. Knispek,

Acting Forest Supervisor.

[FR Doc. 90-13194 Filed 6-6-90; 8:45 am]

BILLING CODE 3410-11-M

Revision of Rio Grande National Forest Land and Resource Management Plan (Forest Plan); Rio Grande National Forest; Alamosa, Archuleta, Conejos, Mineral, Hinsdale, Rio Grande, and Saguache Counties, Colorado

AGENCY: Forest Service, USDA.

ACTION: Notice; intent to prepare an environmental impact statement.

SUMMARY: The Forest Service will prepare an environmental impact statement on the revision of the Rio Grande National Forest Land and Resource Management Plan (Forest Plan).

DATES: Comments concerning the scope of the analysis should be in writing and received by December 31, 1990.

ADDRESSES: Send written comments to Forest Supervisor, Rio Grande National Forest, 1803 W. Highway 160, Monte Vista, Colorado 81144.

FOR FURTHER INFORMATION CONTACT: Planning Staff Officer, (719) 852-5941.

SUPPLEMENTARY INFORMATION: A forest plan shall ordinarily be revised on a 10-year cycle or at least every 15 years. A plan may also be revised whenever the Forest Supervisor determines that conditions or demands in the area covered by the plan have changed significantly. The current Rio Grande National Forest Land and Resource Management Plan was approved on January 4, 1985.

A revision of the Plan has been determined to be appropriate in light of the Order and Memorandum Opinion of Law and related Judgment entered by the Court in *Citizens for Environmental Quality* v. *United States*, Civ. No. 87-F-1714, D. Colo., on August 24, 1989, and amended September 28, 1989. Pending issuance of the revised Plan, which will be prepared in accordance with the Court's Order and all other applicable laws and regulations, the Rio Grande National Forest will comply with the terms of the injunction issued by the Court on August 24, 1989 as amended. Any additional items to be addressed during the Plan revision will be identified as part of the analysis of the management situation.

A range of reasonable alternatives will be developed to address the significant issues identified. Included will be an alternative which is based on a profitable timber production program. Also, a "no action" alternative will be analyzed.

The next two years will be spent doing intensive scoping, involving the public, to identify issues which need to be addressed in the plan revision. A variety of scoping techniques will be employed by the Forest Service. These will include mailings to known interested individuals, newspaper articles, public meetings and open houses.

Revision of the Forest Plan is expected to take four years; the draft environmental impact statement and proposed Forest Plan revision should be available for public review in May, 1993. The final environmental impact statement, Record of Decision, and revised Forest Plan are scheduled to be completed by May, 1994.

The comment period on the draft environmental impact statement will be a minimum of 90 days from the date the Environmental Protection Agency publishes the notice of availability in the **Federal Register**. It is very important that those interested in this Plan revision participate at that time. To be most helpful, comments on the draft environmental impact statement should be as specific as possible and may address the adequacy of the statement or the merits of the alternatives discussed (see The Council on Environmental Quality Regulations for implementing the procedural provisions of the National Environmental Policy Act at 40 CFR 1503.3).

Several court rulings related to public participation in the environmental review process are pertinent to those interested in participating in the revision of the Rio Grande National Forest Land and Resource Management Plan. First, reviewers of draft environmental impact statements must structure their participation in the environmental review of the proposal so that it is meaningful and alerts an agency to the reviewer's position and contentions. *Vermont Yankee Nuclear Power Corp.* v. *NRDC*, 435 U.S. 519, 553 (1978). Environmental objections that could have been raised at the draft stage may be waived if not raised until after completion of the final environmental impact statement. *City of Angoon* v. *Hodel*, (9th Circuit, 1986) and *Wisconsin Heritages, Inc.* v. *Harris*, 490 F.Supp. 1334, 1338 (E.D. Wis. 1980). The reason for this is to ensure that substantive comments and objections are made

available to the Forest Service at a time when it can meaningfully consider them and respond to them in the final environmental impact statement.

The official responsible for approving the revised Forest Plan is the Regional Forester, Rocky Mountain Region, USDA Forest Service, 11177 West 8th Avenue, P.O. Box 25127, Lakewood, Colorado 80225. The Forest Supervisor, Rio Grande National Forest, is delegated responsibility for preparing the revision.

Dated: May 12, 1990.

James B. Webb,

Forest Supervisor.

[FR Doc. 90-13201 Filed 6-6-90; 8:45 am]

BILLING CODE 3410-11-M

CIVIL RIGHTS COMMISSION

Amendment of Public Meeting Location; Florida Advisory Committee

Notice is hereby given, pursuant to the Rules and Regulations of the U.S. Commission on Civil Rights, that a forum of the Florida Advisory Committee to the Commission will convene at 1 p.m. and adjourn at 6 p.m. on July 10, 1990, at the Holiday Inn (Downtown) 111 W. Fortune St., Tampa, Florida 33602. The purpose of the forum is to receive information from public officials and business, civic and civil rights leaders on the status of police-community relations in Tampa.

Persons desiring additional information, should contact Chairperson Michael Moorhead (904/392-2211) or Bobby D. Doctor, Commission Staff at (202/523-5264); TDD (202) 376-8117. Hearing impaired persons who will attend the meeting and require the services of a sign language interpreter should contact the Eastern Regional Division at least five (5) working days before the scheduled date of the meeting.

The meeting will be conducted pursuant to the provisions of the rules and regulations of the Commission.

Dated at Washington, DC, May 29, 1990.

Wilfredo Gonzales,

Staff Director.

[FR Doc. 90-13204 Filed 6-6-90; 8:45 am]

BILLING CODE 6335-01-M

DEPARTMENT OF COMMERCE

International Trade Administration

Export Trade Certificate of Review

AGENCY: International Trade Administration; Commerce.

ACTION: Notice of application.

SUMMARY: The Office of Export Trading Company Affairs, International Trade Administration, Department of Commerce, has received an application for an Export Trade Certificate of Review. This notice summarizes the conduct for which certification is sought and requests comments relevant to whether the Certificate should be issued.

FOR FURTHER INFORMATION CONTACT: Douglas J. Aller, Director, Office of Export Trading Company Affairs, International Trade Administration, 202/377-5131. This is not a toll-free number.

SUPPLEMENTARY INFORMATION: Title III of the Export Trading Company Act of 1982 (15 U.S.C. 4001-21) authorizes the Secretary of Commerce to issue Export Trade Certificates of Review. A Certificate of Review protects the holder and the members identified in the Certificate from state and federal government antitrust actions and from private, treble damage antitrust actions for the export conduct specified in the Certificate and carried out in compliance with its terms and conditions. Section 302(b)(1) of the Act and 15 CFR 325.6(a) require the Secretary to publish a notice in the **Federal Register** identifying the applicant and summarizing its proposed export conduct.

Request for Public Comments

Interested parties may submit written comments relevant to the determination whether a Certificate should be issued. An original and five (5 copies should be submitted no later than 20 days after the date of this notice to: Office of Export Trading Company Affairs, International Trade Administration, Department of Commerce, room 1800H, Washington, DC 20230. Information submitted by any person is exempt from disclosure under the Freedom of Information Act (5 U.S.C. 552). Comments should refer to this application as "Export Trade Certificate of Review, application number 90-00007." A summary of the application follows.

Summary of the Application

Applicant: United States Surimi Commission ("USSC"), 4200 First Interstate Center, Seattle, Washington 98104-4082. *Contact:* J. Carl Mundt, Legal Counsel. *Telephone:* 206/624-5950.

Application No.: 90-00007.

Date Deemed Submitted: May 24, 1990.

Members (in addition to the applicant): Aleutian Speedwell, Inc., Seattle, WA (doing business as Morningstar Fisheries) (controlling entity: Mr. David Stanchfield, Seattle, WA); American Seafoods Company, Seattle, WA (controlling entity: Mr. Kjell Rokke, Seattle, WA); Arctic Alaska Fisheries Corporation, Seattle WA (controlling entity: none); Arctic Storm, Inc., Seattle, WA (controlling entities: Oyang Fisheries Co., Ltd., Seoul, Korea (50%) and Arctic Storm Partnership, Seattle, WA (50%)); Birting Fisheries, Inc., Edmonds, WA (controlling entity: Birting Seafood, Ltd. A/S, Langevaag, Norway); Glacier Fish Company Limited Partnership, Seattle, WA (controlling entity: none); Golden Age Fisheries, Seattle, WA (controlling entities: BTI, Inc., Seattle, WA (50%) and Simonson Investments, Inc., Seattle, WA (50%)); Oceantrawl Inc., Seattle, WA (controlling entity: Surimi Holdings, Inc., Seattle, WA); and ProFish International, Inc., Seattle, WA (controlling entity: none).

Export Trade

1. Products

Surimi. Surimi is a processed and/or blended seafood product that consists of minced fish meat which has been washed to remove fat and undesirable matter (such as blood, pigment and odorous substances) and then mixed with cryoprotectants such as sugar and/or sorbitol, to ensure good frozen shelf life. Surimi may be blended with additional ingredients and additives such as natural shellfish meat, shellfish flavoring, salt and water, and heat processed into fibrous, flaked, chunked or composite-molded consumer products which may or may not resemble specific types of seafood and may or may not be frozen and/or breaded. (See 50 FR 30523, July 26, 1985.)

2. Export Trade Facilitation Services (as they relate to the export of Products)

Consulting; international market research; advertising; marketing; insurance; product research and design; legal assistance; transportation; trade documentation and freight forwarding; communication and processing of foreign orders; warehousing; foreign exchange; financing; and taking title to goods.

Export Markets

The Export Markets include all parts of the world except the United States (the fifty states of the United States, the District of Columbia, the Commonwealth of Puerto Rico, the Virgin Islands, American Samoa, Guam, the Commonwealth of the Northern Mariana Islands, and the Trust Territory of the Pacific Islands).

Export Trade Activities and Methods of Operation

USSC and its Members seek certification for the following activities:

1. Each USSC Member independently will dedicate the quantity of Product that it intends to make available for sale in the Export Markets, and determine in its sole discretion whether any part of such quantity will be sold independently by the Member, be sold in cooperation with some or all of the other Members, or be made available to USSC for sale in the Export Markets. USSC may not require any Member to export any minimum quantity of Product.

2. USSC and/or its Members may enter into agreements to act in certain countries or markets as the Members' exclusive or non-exclusive Export Intermediary(ies) for the quantity of Product dedicated by each Member for sale by USSC or any Member(s) in that country or market. In any such agreement (i) USSC or the Member(s) acting as the exclusive Export Intermediary may agree not to represent any other Supplier of Product with respect to the Export Markets, and (ii) Members may agree that they will export the quantity of Product dedicated for sale in these Export Markets only through USSC or the Member(s) acting as exclusive Export Intermediary and that they will not export independently, either directly or through any other Export Intermediary.

3. USSC and/or one or more of its Members may engage in joint bidding or selling arrangements for the Export Markets and allocate sales resulting from such arrangements among the Members.

4. The Members may refuse to deal with Export Intermediaries other than USSC and its Members.

5. USSC may, for itself and on behalf of its Members, by agreement with its Members, agreement with Export Intermediaries, or on the basis of its own determination:

a. Establish the prices at which Product will be sold in the Export Markets;

b. Establish standard terms of sale of Product;

c. Establish standard quality grades for Product;

d. Establish target prices for sales of Product by its Members in the Export Markets, with each Member remaining free to deviate from such target prices in its sole discretion;

e. Subject to the limitations set forth in paragraph 1 above, establish the quantity of Product to be sold in the Export Markets;

f. Allocate among the Members the Export Markets or customers in the Export Markets;

g. Refuse to quote prices for, or to market or sell, Product in the Export Markets; and

h. Engage in joint promotional activities aimed at developing existing or new Export Markets, such as advertising and trade shows.

6. USSC may, for itself and on behalf of its Members, contact non-Member Suppliers of Product to elicit information relating to price, volume delivery schedules, terms of sale, and other matters relating to such Suppliers' sales or prospective sales in the Export Markets.

7. Subject to the limitations set forth in paragraph 1 above, USSC and its Members may agree on the quantities of Product and the prices at which USSC and its Members may sell Product in and for the Export Markets, and may also agree on territorial and customer allocations in the Export Markets among the Members.

8. USSC and its Members may enter into exclusive and non-exclusive agreements appointing third parties as Export Intermediaries for the sale of Product in the Export Markets. Such agreements may contain the price, quantity, territorial and customer restrictions for the Export Markets contained in paragraph 5, above.

9. USSC and its Members may solicit individual non-Member Suppliers of Product either to sell such Product to USSC for sale in the Export Markets or otherwise to combine the non-member Product with those of some or all of the Members for sale in the Export Markets.

10. With respect to the export of Product to the Export Markets only, USSC may compile for, collect from, and disseminate to its Members, and the Members may discuss among themselves, either in meetings conducted by USSC or independently via telephone and other modes of communication as they decide appropriate, information about the following subjects:

a. Sales and marketing efforts, and activities and opportunities for sales of Product, including but not limited to selling strategies and pricing, projected demand for Product, standard or customary terms of sale in the Export Markets, prices and availability of Product from competitors, and specifications for Product by customers in the Export Markets;

b. Price, quality, quantity, source, and delivery dates of Product available from the Members for export including but not limited to export inventory levels and geographic availability;

c. Terms and conditions of contracts for sales to be considered and/or bid on by USSC and its Members;

d. Joint bidding or selling arrangements and allocation of sales resulting from such arrangements among the Members, including each Member's share of the previous calendar year's total foreign sales (in tons);

e. Expenses specific to exporting to and within the Export Markets, including without limitation, transportation, trans- or intermodal shipments, insurance, inland freight to port, port storage, commissions, export sales, documentation, financing, customs duties, and taxes;

f. U.S. and foreign legislation, regulations and policies affecting export sales; and

g. USSC's and/or its Members' export operations, including without limitation, sales and distribution networks established by USSC or its Members in the Export Markets, and prior export sales by Members (including export price information).

11. USSC and its Members may prescribe conditions for withdrawal of Members from and admission of Members to USSC. Each Member shall have the right to withdraw at any time without further liability to pay dues or assessments except to pay to the corporation any remaining amounts due under a written subscription signed by the Member agreeing to make such contribution.

12. USSC may, for itself or on behalf of its Members, establish and implement a quality assurance program for Product, including without limitation establishing, staffing and operating a laboratory to conduct quality testing, promulgating quality standards or grades, inspecting Product samples, and publishing guidelines for and reports of the results of laboratory testing.

13. USSC may conduct meetings of its Members to engage in the activities described in paragraphs one through twelve, above.

Definitions

1. *Supplier* means a person who produces, provides or sells Products or Export Trade Facilitation Services.

2. An *Export Intermediary* means a person who acts as a distributor, representative, sales or marketing agent, or broker, or who performs similar functions, including providing or arranging for the provision of Export Trade Facilitation Services.

Dated: June 1, 1990.

Douglas J. Aller,

Director, Office of Export Trading, Company Affairs.

[FR Doc. 90-13144 Filed 6-6-90; 8:45 am]

BILLING CODE 3510-DR-M

United States-Canada Free-Trade Agreement, Article 1904 Binational Panel Reviews: Correction to Notice of Completion of Panel Review

AGENCY: United States-Canada Free-Trade Agreement, Binational Secretariat, United States Section, International Trade Administration, Department of Commerce.

ACTION: Correction.

SUMMARY: This action corrects an error in the Notice of Completion of Panel Review of final determination made by the International Trade Administration, Import Administration, in an administrative review respecting Replacement Parts for Self-Propelled Bituminous Paving Equipment from Canada, published in the **Federal Register** on April 19, 1990 (55 FR 14848).

In FR Doc. 90-9118, on page 14848, second column, line 20, insert additional file number reference "/05" after the numeral "1904-03" such that the file reference reads "Secretariat File No. USA-89-1904-03/05".

Dated: May 30, 1990.

James R. Holbein,

United States Secretary, FTA Binational Secretariat.

[FR Doc. 90-13209 Filed 6-6-90; 8:45 am]

BILLING CODE 3510-GT-M

Minority Business Development Agency

Minority Enterprise Development Advisory Council; Meeting

The Department of Commerce announces the following meeting:

Name: Minority Enterprise Development Advisory Council.

Date and Time: June 11, 1990—9 a.m. to 4 p.m.; June 12, 1990—9 a.m. to 4 p.m.

Place: TRW Systems, One Federal Systems Park Drive, Fairfax, Virginia 22033.

Contact Person: Guale D. Owens, Confidential Assistant, Minority Business Development Agency, Department of Commerce, 14th & Constitution Avenue, NW., Washington, DC 20230, (202) 377-5061.

Minutes: May be obtained from contact person listed above.

Purpose of Meeting: Administrative Meeting. Open meeting—limited seating—anyone wishing to attend please call prior to meeting.

Kenneth E. Bolton,

Director.

[FR Doc. 90-13124 Filed 6-6-90; 8:45 am]

BILLING CODE 3510-21-M

National Oceanic and Atmospheric Administration

Public Review of the National Academy of Sciences Report on the Decline of Sea Turtles—Causes and Prevention

AGENCY: National Marine Fisheries Service (NMFS), NOAA, Commerce.

ACTION: Notice of availability of findings, request for public review and comment, and intent to prepare recommendations.

SUMMARY: NOAA announces the availability of findings of a Congressionally mandated report of the causes for the decline of sea turtles, conducted by the National Academy of Sciences (NAS). The agency intends to prepare recommendations to be submitted to Congress for the protection of sea turtles based on its review of this report and other information. NMFS requests written views and information pertaining to the findings of the NAS report for consideration prior to preparing its recommendations to Congress.

The 1988 Amendments to the Endangered Species Act of 1973 (ESA) directed the agency to contract with NAS to review information pertaining to the ecology and protection of the five species of sea turtles found in the southeastern United States: Kemp's ridley, loggerhead, green turtle, hawksbill, and leatherback. Congress further directed the agency to submit the NAS report along with recommendations in connection therewith to Congress upon review of the report and other information detailed in section 1008 of the 1988 ESA Amendments (Public Law 100-478).

The NAS report presents scientific and technical information on the population biology, ecology, and reproductive behavior of the five species of sea turtles. It evaluates their population declines, causes of mortality, the effectiveness of past and current mitigation efforts, and recommends conservation measures to protect or increase turtle populations.

The report identifies the incidental capture of sea turtles in shrimp trawls as the largest human-caused source of mortality. Shrimp trawling accounts for more deaths than all other human activities combined. At least 11,000 turtles, and possibly three to four times that many, die as a result of shrimp fishing each year if no protective measures, such as the required use of turtle excluder devices (TEDs), are in place. The report concludes that TEDs should be required for all shrimp trawls at most places and most times of the year from Cape Hatteras, NC., to the Texas-Mexico border to protect sea turtles.

NMFS plans to evaluate the National Academy of Sciences report and the comments received on the report's findings. In addition, the agency will review and evaluate all other relevant information. Based on consultations with interested and affected parties, the agency may propose changes to its current sea turtle protection program.

DATES: Written comments on the findings of the NAS report are requested until August 6, 1990.

ADDRESSES: Send written comments and information to: National Sea Turtle Coordinator, Dr. Nancy Foster, Director, Office of Protected Resources, NOAA, NMFS, 1335 East-West Highway, Silver Spring, MD 20910.

FOR FURTHER INFORMATION OR TO OBTAIN A COPY OF THE NATIONAL ACADEMY OF SCIENCES SEA TURTLE REPORT FOR REVIEW, CONTACT: Phil Williams (301-427-2322) or Charles A. Oravetz (813-893-3366).

SUPPLEMENTARY INFORMATION:

Congressionally Mandated Independent Study of Sea Turtles

Concerns about the continuing declines of sea turtle populations and the potential impact of protective regulations on commercial shrimp trawlers (**Federal Register**, Vol. 52, No. 124, pp. 24247-24262, June 29, 1987) prompted the Congress to add a provision to the Endangered Species Act Amendments of 1988 mandating an independent review by the National Academy of Sciences (NAS) of scientific and technical information pertaining to conservation of sea turtles. The Congress further mandated review of the causes and significance of turtle mortality, including that caused by commercial trawling.

Section 1008 of the Endangered Species Act Amendments of 1988 (Pub. L. 100-478) specified that the agency contract for an independent review of scientific information pertaining to the conservation of each of the relevant species of sea turtles. This study was to be conducted by the National Academy of Sciences with individuals not employed by Federal or State

governments other than employees of State universities and having scientific expertise and special knowledge of sea turtles and activities that may adversely affect sea turtles.

Purposes of Study

Section 1008 of Public Law (Pub. L.) 100–478 specified the following purposes for the study:

(1) To further long-term conservation of each of the relevant species of sea turtles which occur in the waters of the United States.

(2) To further knowledge of activities performed in the waters and on the shores of the United States, Mexico and other nations which adversely affect each of the relevant species of sea turtles.

(3) To determine the relative impact which each of the activities found to be having an adverse effect on each of the relevant species of turtles has upon the status of each such species.

(4) To assist in identifying appropriate conservation and recovery measures to address each of the activities which affect adversely each of the relevant species of sea turtles.

(5) To assist in identifying appropriate reproductive measures which will aid in the conservation of each of the relevant species of sea turtles.

(6) In particular, to assist in determining whether more or less stringent measures to reduce the drowning of sea turtles in shrimp nets are necessary and advisable to provide for the conservation of each of the relevant species of sea turtles and whether such measures should be applicable to inshore and offshore areas as well as to various geographical locations.

(7) To furnish information and other forms of assistance to the Secretary for his use in reviewing the status of each of the relevant species of sea turtles and in carrying out other responsibilities contained under the Act and law.

Issues for Study

Section 1008 of Public Law 100–478 also specified that, while the terms and outlines of the review should be determined by a panel to be appointed by the President of the National Academy of Sciences, the review should, at a minimum, include the following issues for study:

(1) Estimates of the status, size, age structure and, where possible, sex structure of each of the relevant species of sea turtles.

(2) The distribution and concentration, in terms of United States geographic zones, of each of the relevant species of sea turtles.

(3) The distribution and concentration of each of the relevant species of sea turtles, in the waters of the United States, Mexico and other nations during the developmental, migratory and reproductive phases of their lives.

(4) Identification of all causes of mortality, in the waters and on the shores of the United States, Mexico and other nations for each of the relevant species of sea turtles.

(5) Estimates of the magnitude and significance of each of the identified causes of turtle mortality.

(6) Estimates of the magnitude and significance of present or needed head-start or other programs designed to increase the production and population size of each of the relevant species of sea turtles.

(7) Description of the measures to be taken by Mexico and other nations to conserve each of the relevant species of sea turtles in their waters and on their shores, along with a description of the efforts to enforce these measures and an assessment of the success of these measures.

(8) The identification of nesting and/or reproductive locations for each of the relevant species of sea turtles in the waters and on the shores of the United States, Mexico and other nations and measures that should be undertaken at each location as well as a description of worldwide efforts to protect such species of turtles.

Submission of Recommendations to Congress by the Secretary of Commerce

Section 1008 of Public Law 100–478 directed that the agency submit the NAS report together with recommendations in connection therewith, to the Committee on Environment and Public Works of the United States Senate and the Committee on Merchant Marine and Fisheries of the U.S. House of Representatives. Further, after receipt of the report, the agency is to review the status of each of the five species of sea turtles. Finally, after receipt of the report, the agency is to consider, along with the requirements of existing law, the following before making recommendations to Congress:

(1) Reports from the panel conducting the independent review.

(2) Written views and information of interested parties.

(3) The review of the status of each of the relevant species of sea turtles.

(4) The relationship of any more or less stringent measures to reduce the drowning of each of the relevant species of sea turtles in shrimp nets to the overall conservation plan for each such species.

(5) Whether increased reproductive or other efforts in behalf of each of the relevant species of sea turtles would make no longer necessary and advisable, present or proposed conservation regulations regarding shrimping nets.

(6) Whether certain geographical areas such as, but not limited to, inshore areas and offshore areas, should have more stringent, less stringent or different measures imposed upon them in order to reduce the drowning of each of the relevant species of sea turtles in shrimp nets.

(7) Other reliable information regarding the relationship between each of the relevant species of sea turtles and shrimp fishing and other activities in the waters of the United States, Mexico and other nations of the world.

(8) The need for improved cooperation among departments, agencies and entities of Federal and State government, the need for improved cooperation with other nations and the need for treaties or international agreements on a bilateral or multilateral basis.

Review of the National Academy of Sciences Report and Other Relevant Information

NOAA scientists and resource managers will carefully evaluate the National Academy of Sciences report and the comments received on its findings. As part of this evaluation, NMFS will supplement the findings with more current information, if available. The agency will review and address the report's findings in light of all known information and the requirements of the ESA to develop comprehensive recommendations for sea turtle protection in the Atlantic and southeastern United States for submission to Congress. Based on consultations with interested and affected parties, the agency may propose changes to its current sea turtle protection program.

EXECUTIVE SUMMARY OF THE NATIONAL ACADEMY OF SCIENCES STUDY: DECLINE OF THE SEA TURTLE: CAUSES AND PREVENTION

Introduction

Five species of sea turtles regularly spend part of their lives in U.S. coastal waters of the Atlantic Ocean and the Gulf of Mexico: Kemp's ridley, loggerhead, green turtle, hawksbill, and leatherback. They are ancient reptiles, having appeared on the earth millions of years before humans. Sea turtles were widely used by humans in earlier times for food, ornaments, and leather, and

they still are used in these ways by many societies. They are now endangered or threatened and are protected under the Endangered Species Act. Kemp's ridley, leatherbacks, and hawksbills are listed as endangered throughout their ranges; green turtles are endangered in Florida, and threatened in all other locations; loggerheads are listed as threatened throughout their range. For some major populations and species of sea turtles to persist, substantial progress in conservation will have to be made.

Concerns about the continuing declines of sea turtle populations and the potential impact of new gear regulations on commercial shrimp trawlers prompted the Congress to add a provision to the Endangered Species Act Amendments of 1988 mandating an independent review by the National Academy of Sciences of scientific and technical information pertaining to conservation of sea turtles. The Congress further mandated review of the causes and significance of turtle mortality, including that caused by commercial trawling. Accordingly, a study committee was convened by the National Research Council's Board of Environmental Studies and Toxicology in collaboration with its Board of Biology. The committee included experts in international and domestic sea turtle biology and ecology, coastal zone development and management, commercial fisheries and gear technology, marine resources, and conservation biology. During the course of the committee's one-year study, it heard from representatives of the shrimping industry, conservation organizations, the U.S. Fish and Wildlife Service, the National Marine Fisheries Service, and Sea Grant programs. The committee observed shrimp trawling exercises with and without turtle excluder devices on a converted shrimp trawler in Georgia coastal waters. It reviewed pertinent published literature and analyzed original data sets on aerial and beach turtle surveys, shrimp trawling efforts, other commercial fisheries, turtle strandings, and other materials from a variety of organizations and knowledgeable individuals.

The National Academy of Sciences report presents scientific and technical information on the population biology, ecology, and reproductive behavior of five endangered or threatened species of sea turtles. It evaluates population declines, causes of turtle mortality, and the effectiveness of past and current mitigation efforts, and recommends conservation measures to protect or increase turtle populations.

LIFE HISTORIES OF SEA TURTLES

The five species of sea turtles considered in the report have similar life histories. Females of all five species lay clutches of about 100 eggs and bury them in nests on coastal beaches. Mature male and female sea turtles aggregate off the nesting beaches during the spring to mate, and females might return to the beach to deposit one to ten clutches in season. Individual Kemp's ridleys probably nest each year after reaching maturity; females of the other species routinely nest every 2–4 years.

After an incubation period of about 2 months, hatchlings of all the species dig their way to the surface of the sand and scramble over the beach in their short trip to the ocean. Once in the water, they swim offshore and spend their early life near the surface in the offshore waters of the Atlantic or Gulf of Mexico. After a few years, most species enter the coastal zone or move into the bays, river mouths, and estuaries, where they spend their juvenile life, eating and growing until they reach maturity some 10–50 years later. Mature sea turtles usually weigh 35–500 kilograms.

Food habits differ among species. Kemp's ridleys prefer crabs, loggerheads eat a wide range of bottom-dwelling invertebrates, green turtles eat bottom-dwelling plants, leatherbacks prey on jellyfish in mid-water, and hawksbills specialize on bottom-dwelling sponges.

Sea Turtle Distribution and Abundance

Judged from strandings of carcasses on beaches from the Mexican border to Maine, the most abundant sea turtles in U.S. coastal waters are loggerheads, followed by Kemp's ridleys, green turtles, leatherbacks, and hawksbills. According to aerial surveys, large loggerheads are most abundant off the coasts, and leatherbacks are about one-hundredth as abundant as loggerheads in the Atlantic. In general, other adult turtles and smaller juveniles are difficult to see and identify from the air.

One of the two largest loggerhead rookeries in the world is concentrated along the Atlantic beaches of central and southern Florida, but loggerheads nest from southern Virginia to eastern Louisiana. Aerial surveys have identified large concentrations of loggerheads off their primary nesting beaches in Florida during the spring and summer; sighting off the nesting beaches are much less frequent during the autumn and winter.

Regular nesting of green turtles and leatherbacks also occurs on the Atlantic beaches of central and southern Florida. Kemp's ridleys and hawksbills do not make important use of U.S. coastal beaches, except for hawksbills in the U.S. Caribbean islands.

On the basis of aerial sightings and incidental catches in shrimp trawls, juvenile and adult sea turtles off the south Atlantic and gulf coasts are more abundant in waters less than 50 meters deep, than in deeper waters. Data on depth distribution are scarce, but turtle density during shrimping seasons is apparently about 10 times greater in shallow than in deeper waters.

Sea Turtle Population Trends

Changes in sea turtle populations are most reliably indicated by changes in the numbers of nests and nesting females on the nesting beaches. Females return to the same beaches repeatedly and are relatively easily counted there. For trend analysis, the incidence of carcass strandings on the beaches and the number of adults sighted at sea from airplanes are much less satisfactory, because of uncontrolled variables and uncertainties.

The results of population-trend studies are clear in several important cases. Kemp's ridley nesting populations have declined to about 1% of their abundance in 1947 at their only important nesting beach, Rancho Nuevo, on the Mexican coast of the Gulf of Mexico. Since 1987, the number of Kemp's ridley nests has been declining at about 14 per year; the total number of nesting females currently might be as low as 350 (although clearly there are additional turtles in the population: juveniles and males). Loggerhead populations nesting in South Carolina and Georgia are declining, but populations on parts of Florida's Melbourne Beach and Hutchinson Island apparently are not declining, and the Hutchinson Island population might even be increasing. Green turtles nesting on Hutchinson Island are increasing. Data are insufficient to determine whether other populations in U.S. waters are increasing or decreasing. Data available on hawksbills or leatherbacks do not show clear cut trends in U.S. waters.

Natural Mortality of Sea Turtles and Reproductive Value of Life Stages

Mature female sea turtles may lay clutches of eggs during their lifetimes with about 100 eggs per clutch, but only about 85% of the undisturbed eggs produce hatchlings, and most of the hatchlings probably die in their first year. The greatest source of natural mortality of these eggs and hatchlings is predation, primarily by carnivorous mammals, birds, and crabs in and on the beaches and by birds and predatory

fishes in the ocean. Shoreline erosion of dunes and inundation (drowning) of nests are important sources of natural mortality. Various causes of sea turtle mortality associated with human activities (artificial lighting, coastal development, etc.) are usually an important component of total mortality. As juvenile turtles in the shallow coastal zone reach a larger size (58–79 centimeters long), natural mortality rates are expected to decline. A female loggerhead probably reaches maturity at about 20–25 years, remains reproductively active for another 30 years or so, and produces a very large number of eggs during her lifetime.

The consideration of age-specific natural mortality and reproduction leads to the important concept of reproductive value of each of a turtle's life stages. Reproductive value is a measure of how much an individual at a particular stage of life contributes to the future growth or maintenance of the population. An analysis of reproductive value provides valuable insight for decision makers responsible for the conservation of sea turtles, because it indicates which individuals contribute most to future populations and also where protection is likely to the most effective. One life-stage analysis of reproductive value for eggs and hatchlings, small juveniles, subadults and nesting adults used loggerheads at Little Cumberland Island, Georgia, as the example. It was concluded that the key to improving the outlook for Georgia and Carolina nesting loggerhead populations lies in reducing the mortality in the older stages, particularly the large juveniles 58–79 centimeters long. Because the reproductive value of the earliest stage was so very low compared with the older stages, protecting 100% of the eggs and hatchlings was not sufficient to reverse the decline in numbers of nesting females of this model population. It was also noted that the 58–79 centimeter group of large juveniles is the size class that dominates in the distribution of stranded carcasses on beaches from northern Florida to North Carolina.

The committee concluded that conservation measures directed at large juveniles and adults are especially critical to the success of sea turtle conservation.

Sea Turtle Mortality Associated With Human Activities

All life stages of sea turtles are susceptible to humaninduced mortality. Direct human manipulations—such as beach armoring, beach nourishment, beach lighting, and beach cleaning—can reduce the survival of eggs and hatchlings in and on the beaches. The presence of humans on the beach, on foot or in vehicles, can adversely affect nesting, buried eggs, and emerging hatchlings. Other factors, such as beach erosion and accretion, or the introduction of exotic plants and predators, are indirect effects of humans that can be responsible for many turtle deaths.

However, the committee's analyses led it to conclude that for juveniles, subadults, and breeders in the coastal waters, the most important human-associated source of mortality is incidental capture in shrimp trawls, which accounts for more deaths than all other human activities combined. The committee estimated that mortality from shrimping lies between 5,000–50,000 loggerheads and 500–5,000 Kemp's ridley each year. Collectively, other trawl fisheries; fisheries that use passive gear, such as traps, gill nets, and long lines; and entanglement in lost or discarded fishing gear and debris are responsible for an additional 500–5,000 loggerhead deaths and 50–500 Kemp's ridley deaths a year. Although those numbers are an order of magnitude lower than the losses due to the shrimp fisheries, they are important. Next in importance are the deaths due to dredging, collisions with boats, and oil-rig removal: an estimated 50–500 loggerheads each and 550 Kemp's ridley each. Deaths from intentional harvest of turtles in U.S. coastal waters and entrainment by electric power plants are judged each to be fewer than 50 per year. Death resulting from ingestion of plastics and debris and from accumulation of toxic substances, especially from ingested petroleum residues, could be important, but the committee was unable to quantify them.

The estimates of human-associated sea turtle deaths are most certain for shrimp fishing and power-plant entrainment; they are less certain for other fisheries, collisions, oil-rig removal, intentional harvest, and ingestion of plastics and debris. In some cases, although direct estimation is impossible, worst-case estimates provide an upper limit on the potential mortality associated with oil-rig removal and collisions with boats. In some cases, conservation measures are in place or are being implemented, and these will lower the above estimates.

The Shrimp Fishery

The U.S. shrimp fishery is a complex of fisheries from Cape Hatteras, North Carolina, to the Mexican border in the Gulf. Those fisheries harvest various species of shrimp at various stages in their life cycles, using a variety of vessels that range from ocean-going trawlers to small vessels operating in nearshore or inside waters. About one-third of the shrimping effort occurs in bays, rivers, and estuaries; two-thirds occurs outside the coastline. Ninety-two percent of the total effort is in the Gulf; most of that is in waters shallower than 27 meters.

The fishing areas off the coastal beaches of Texas and Louisiana account for 55% of the total U.S. effort and 83% of the effort off the coastal beaches. In the Atlantic, 92% is within 5 km of shore. An important nesting area for turtles, where almost no shrimping effort occurs, is the central to southern portion of the Atlantic coast of Florida. Atlantic shrimping effort is concentrated off South Carolina, Georgia, and northern Florida.

Several lines of strong evidence make it clear that sea turtle mortality due to incidental capture in shrimp trawls is large:

- The proportion of dead and comatose turtles in shrimp trawls increase with tow time of the trawl—from very few at 40 minutes to about 70% after 90 minutes.
- The number of stranded carcasses on the beaches increases stepwise by factors of 2.7 to 6 when shrimp fisheries open in South Carolina and Texas, and decreases stepwise when a shrimp fishery closes in Texas. The data suggest that 70–80% of the turtles stranded at those times and places were caught and killed in shrimp trawls.
- Loggerhead nesting populations are declining in Georgia and South Carolina, where shrimp fishing is intense, but are not declining and might even be increasing farther south in central and southern Florida, where shrimp fishing is rare or absent. The committee is aware that these interactions are complex.
- A much-cited estimate of shrimping-related mortality, 11,000 loggerheads and Kemp's ridleys per year in U.S. coastal waters of the Atlantic and gulf, was judged by this committee to be an underestimate, possibly by as much as a factor of 4. This maximal value of 44,000 falls within the order of magnitude estimates by the committee that the number of loggerheads and Kemp's ridley killed annually lies between 5,500 and 55,000. The estimate of 11,000 turtles killed annually was based on analysis that did not account for mortality in bays, rivers, and estuaries, even though many turtles and one-third of the shrimping effort occurs there. The estimate was also based on the assumption that all comatose turtles brought up in shrimp nets would survive. Recent observations have

suggested that many (perhaps most) comatose turtles will die and should be included in the mortality estimates until effective rehabilitation methods are available and used.

• In North Carolina, turtle stranding rates increase in the summer south of Cape Hatteras while the shrimp fishery is active there and in the fall and winter north of Cape Hatteras while the flounder trawl fishery is active there. That observation suggests that the flounder fishery might be another source of mortality north of the cape in the fall and winter.

Other Fisheries

Mortality associated with other fisheries and with lost or discarded gear is much more difficult to estimate than that associated with shrimp trawling, and there is a need to improve the estimates. A few cases stand out, such as the possible turtle losses from the winter flounder trawl fishery north of Cape Hatteras (about 50–200 turtles per year); the historical Atlantic sturgeon fishery, now closed, off the Carolinas (about 200 to 800 turtles per year); and the Chesapeake Bay passive-gear fisheries (about 25 turtles per year). Considering the large numbers of fisheries from Maine to Texas that have not been evaluated and the problems of estimating the numbers of turtles entangled in the 135,000 metric tons of plastic nets, lines, and buoys lost or discarded annually, it seems likely that more than 500 loggerheads and 50 Kemp's ridleys are killed by non-shrimp fisheries.

Dredging

Estimates of the mortality of sea turtles taken in dredging operations range from 0.001 to 0.1 turtles per hour. If it takes 1,000 hours of dredging to maintain each navigation channel each year, one to 100 turtles could be killed per active channel in areas frequented by turtles. The 0.1 turtles per hour might be an unrealistically high estimate, and some conservation measures are in place, so the number of turtles killed per channel is probably much less than 100 per year.

Boat Collisions

Boat collisions with turtles are evident from damage to turtles that strand on coastal beaches. Many of them could have been dead before they were hit, but not all turtles hit and killed by boats drift ashore. The committee estimates that a maximum of 400 turtles per year are killed by collisions off the coasts, but the estimate is very uncertain and unknown for inside waters.

Oil Platforms

About 100 oil platforms in the western gulf are scheduled for removal each year for the next 10 years. The probability of there being at least one turtle within the damage zone (i.e., within 1,000 m of an explosion to remove a rig) is estimated to be 0.5. That yields a minimal estimate of 50 turtle deaths per year. This estimate might be low, because it is based only on aerial sightings of turtles, or high, because rigs will be surveyed and attempts made to move turtles out of the region before rig removal.

Plastics and Debris

About 24,000 metric tons of plastic packaging is dumped into the ocean each year. The occurrence of plastic debris in the digestive tracts of sea turtles is common; for example, half the turtles that stranded on Texas beaches in 1986–1988 and one-third of the leatherbacks and one-fourth of the green turtles from the New York Bight area necropsied in 1979–1988 had plastic debris in their digestive tracts. The food preferences of the leatherback (jellyfish) and green turtle (bottom plants), in particular, could make them especially susceptible to ingestion of plastic bags. Ingestion of plastics could interfere with food passage, respiration, and buoyancy and could reduce the fitness of a turtle or kill it. Floating plastics and other debris, such as petroleum residues drifting on the sea surface, accumulate in sargassum drift lines commonly inhabited by hatchling sea turtles during their pelagic stage; these materials could be toxic.

The committee was unable to make quantitative estimates of mortality from these sources, but the impact of ingesting plastics or debris could be severe.

Sea Turtle Conservation

The committee considered conservation measures applicable to the two habitats of sea turtles most vulnerable to human-associated mortality; the beaches (eggs, hatchlings, and nesting females) and the coastal zone (juveniles, subadults, and breeders). The first set of conservation measures pertains to activities in the coastal zone off the coastal beaches and in the bays, rivers, and estuaries.

Eggs, Hatchlings, and Nesting Females

Nesting Habitat

Critical nesting habitat can be protected through various types of public and private ownership and regulation of beach activities. Increased protection can prevent damage from beach armoring, beach nourishment, and human use, including vehicular traffic. Relocation of nests can also help, but must be done by qualified and approved groups. The disorientation caused by artificial lighting might be reduced with the use of low-pressure sodium lights. Some municipalities in Florida have passed lighting ordinances. Protection of eggs from predators and predator control on some beaches are important conservation measures. Kemp's ridley eggs at Rancho Nuevo still must be removed from the nests and protected from the human and coyote predation to ensure their survival; almost all eggs are transferred to an enclosed hatchery and thus protected from predators.

Headstarting

Headstarting is an attempt to reduce the mortality of hatchlings by rearing them in captivity to a size at which their mortality rate in the wild should be lower. It is an active experiment with Kemp's ridley, but headstarting has not yet proved to be effective. Benefits are uncertain, because some headstarted turtles appear to behave abnormally in the wild, many are soon caught in various fisheries, and none has yet been recorded as reaching maturity or nesting. Headstarting methods have improved greatly, and proponents argue that the experiment has not yet received a fair test. The program has research and public-awareness benefits. Regardless, headstarting cannot be effective without concurrent reduction in the mortality of juveniles in the coastal zone.

Captive Breeding

Loggerhead, green turtles, and Kemp's ridleys have been raised in captivity from eggs to adults. The same species lay fertile eggs in captivity. However, despite success in captive breeding programs, the committee does not consider captive breeding to be a preferred management tool. If a species became extinct except for captive animals, it would probably not be feasible to re-establish the wild population from captive animals, because captive animals in an aquarium or zoo would retain only a portion of the genetic materials of their species.

Artificial Imprinting

Some limited evidence suggests that hatchlings might imprint on their natal beaches. The extent to which artificial imprinting might promote new nesting sites or restore old ones remains uncertain.

Juveniles, Subadults, and Breeders

Conservation measures applicable to juveniles, subadults, and breeders involve the reduction of intentional harvest, reduction of unintentional capture and deaths in fishing gear, and modification of dredging operations, oil-rig removal, and various other sources of human-associated mortality.

Prohibition of Intentional Harvest

Intentional harvest of sea turtles in U.S. waters is prohibited by the Endangered Species Act. The increase in numbers of green turtles nesting at one site in southern Florida might be early evidence that prohibition has been effective. Similar protection has been implemented in Mexico, but enforcement is imperfect. Intentional harvest of sea turtles and their eggs continues to occur throughout the Caribbean region, including Puerto Rico.

Reduction of Unintentional Bycatch

Sea turtle deaths caused by unintentional capture in shellfish and finfish fisheries can be reduced by limiting fishing effort at some times and places, closing a fishery, modifying fishing gear to exclude turtles or, for trawl fisheries, reducing the tow times. New technology, such as the use of turtle excluder devices (TEDs) in bottom trawls and smaller mesh size in pound-net leaders, can reduce turtle deaths.

Fishery closures can be effective, as demonstrated in the case of the sturgeon fishery off the Carolinas and as evidenced by the maintenance of sea turtle nesting rookeries in the south Atlantic coast of Florida, where there is very little shrimp fishing. There might be some areas and seasons in which turtles are so common that a fishery should be closed and other areas and seasons in which turtles are so uncommon that fishing could occur without the need for devices or procedures to reduce turtle mortality. One area to consider for less stringent measures to prevent turtle deaths is the deeper waters of the Gulf of Mexico. Distribution data should be examined in detail to locate possible sites on fine spatial and temporal scales, for example by month, fishing zone, and depth.

Turtle excluder devices are designed for installation in shrimp-trawling gear to release turtles from the net without releasing shrimp. By November 1989, six TED designs had been shown to exclude 97% of the sea turtles that would have been caught in nets without TEDs. They have been certified by the National Marine Fisheries Service to exclude turtles. Some, such as the Georgia jumper, have stiff frames; others, such as the Morrison soft TED, are made only of soft webbing. The various designs differ in their ability to retain shrimp. Under good conditions, some designs have not been shown to reduce shrimp catch, whereas others have. A TED's performance also is affected by the roughness of the bottom and the amount of debris or vegetation on the bottom. Debris can collect on a TED and degrade the efficiency of the TED in excluding turtles and the efficiency of the net in capturing shrimp. Reduction of tow time might be a preferable alternative to the use of TEDs in some locations if there is too much debris. In some situations, a TED can improve the efficiency of trawling by excluding cannonball jellyfish, which otherwise would clog the net, or by reducing the bycatch of finfish, sometimes by 60–80%.

Fishing effectively with TEDs requires some skill in adapting to local situations, but overall it is an effective way to protect the juveniles and adults that are important to the maintenance and recovery of sea turtle populations. TED technology transfer is crucial, because TEDs are effective in excluding turtles from shrimp trawls. The National Marine Fisheries Service has relied heavily on the Sea Grant program to help in the transfer of TED technology to shrimp fleets. Many activities have been undertaken, such as workshops, hearings, dockside and on-board demonstrations, presentations at industry meetings, and distribution of a large variety of written information. But the responses of commercial shrimpers to these initiatives have been poor in many areas.

Making tow times shorter than those which kill turtles might work in some situations in which short tow times are feasible. If tow times are limited to 40 minutes in the summer and 60 minutes in the winter, few, if any, captured turtles die or become comatose. Comatose turtles should be counted as dead, until effective rehabilitation techniques for comatose turtles can be developed and demonstrated. Limiting tow times is probably more feasible with small boats in shallow waters. Even so, the problem of multiple successive recaptures must be solved.

Dredging

With respect to dredging, conservation measures might have included relocation, but in trials, some turtles have returned to the dredging area after an unacceptably short time. Several actions have been initiated: putting observers on dredges, comparing different dredge designs, redesigning deflectors, and studying the behavior and distribution of sea turtles in key navigation channels. Studies of the latter type in the Port Canaveral Entrance Channel have led to restricting dredging to the fall, when turtles are least abundant there.

Collisions With Boats

Collisions of boats with turtles are difficult to count, and conservation measures are inherently difficult to implement. Better evaluation of the extent of the problem could lead to production and distribution of educational material and some boating rules in inside waters with high concentrations of turtles.

Oil-Rig Removal

The impact of oil-rig removal on sea turtles is poorly documented. Conservation measures should include surveys and removal of sea turtles before oil-rig demolition and further evaluation of the extent of the problem.

Power Plants

A few sea turtles are still being entrained at the intake pipes of some power plants. Use of tended barrier nets to remove sea turtles could reduce this small source of mortality.

Plastics and Debris

The best conservation measures to reduce ingestion of plastics and debris are measures that reduce ocean dumping of such materials from ships and land sources. The International Convention for the Prevention of Pollution from Ships (known as MARPOL) makes it illegal to dispose of any plastics at sea. It also sets down guidelines to prohibit dumping of garbage (of the galley type) in nearshore waters. The consequences for sea turtles of ingesting plastics and debris are poorly understood, and the subject needs further study.

Education

Public education is important for calling attention to sea turtle conservation and implementing the conservation measure. Good beach management stems from an informed and educated public. Many published materials are already available, and others will be needed, especially on the effects of fisheries on the sea turtle life stages with the highest reproductive value and on the effects of ingesting plastics and other debris.

Research

Research projects on sea turtles have been many and varied, and they span such broad categories as distribution, population trends, food habits, growth

and physiology, and major threats to survival. The committee recognizes the need to improve the data bases for each of those categories, to establish long-term surveys of sea turtle populations at sea and on land, and to initiate experimental programs to increase population sizes.

Conclusions and Recommendations

Conclusions

1. Combined annual counts of nests and nesting females indicate that nesting sea turtles continue to experience population declines in most of the United States. Declines of Kemp's ridley on the nesting beaches in Mexico and of loggerheads on South Carolina and Georgia nesting beaches are especially clear.

2. Natural mortality factors—such as predation, parasitism, diseases and environmental changes—are largely unquantified, so their respective impacts on sea turtle populations remain unclear.

3. Sea turtles can be killed by several human activities, including the effects of beach manipulation on eggs and hatchlings and several phenomena that affect juveniles and adults at sea: collisions with boats, entrapment in fishing nets and other gear, dredging, oil-rig removal, power plant entrainment, ingestion of plastics and toxic substances, and incidental capture on shrimp trawls.

4. The incidental capture of sea turtles in shrimp trawls was identified by this committee as the major cause of mortality associated with human activities; it kills more sea turtles than all other human activities combined.

5. Shrimping can be compatible with the conservation of sea turtles if adequate controls are placed on trawling activities, especially the mandatory use of turtle excluder devices (TEDs) at most places at most times of the year.

6. The increased use of conservation measures on a worldwide basis would help to conserve sea turtles.

Recommendations

1. Trawl-related mortality must be reduced to conserve sea turtle populations, especially loggerheads and Kemp's ridleys. The best method currently available (short of preventing trawling) is the use of TEDs. Therefore, although the waters off northern Florida, Georgia, South Carolina, Louisiana, Mississippi, Alabama, and Texas are most critical, the committee recommends the use of TEDs in bottom trawls at most places and most times of the year from Cape Hatteras to the Texas-Mexico border. At the few places and times where TEDs might be ineffective (e.g., where there is a great deal of debris), alternative conservation measures for shrimp trawling might include a tow-time regulation under specific controls, and area and time closures. Available data suggest that limiting tow times to 40 minutes in summer and 60 minutes in winter would yield sea turtle survival rates that approximate those required for approval of a new TED design. Restrictions could be relaxed where turtles are and historically have been rare.

2. Conservation and recovery measures for all sea turtle species that occur in U.S. territorial waters should include protection of nesting habitats, eggs, and animals of all sizes. Of special concern are the nesting beaches of Kemp's ridleys in Mexico and of loggerheads between Melbourne Beach and Hutchinson Island in Florida. Undeveloped beach property between Melbourne Beach and Wabasso Beach, Florida, in the Archie Carr National Wildlife Refuge proposed by the U.S. Fish and Wildlife Service, should be protected. Lands are available for purchase, and action should be taken now.

3. Incidental deaths associated with other human activities—such as other fisheries and abandoned fishing gear, dredging, and oil-rig removal—should also be addressed and reduced.

4. Headstarting should be maintained as a research tool, but it cannot substitute for other essential conservation measures.

5. Research on sea turtles should include improvement of the data base on survivorship, fecundity, mortality at all stages; distribution and movements; effects of ingesting plastics and petroleum particles; parasitism, and disease, and other pathological conditions; and physiology of sea turtles, especially their resistance to prolonged submergence and their recovery from comatose condition. Carefully designed and implemented long-term surveys of sea turtle populations, both on land and in the sea, will be crucial to their survival. The cumulative effects of human activities on nesting beaches should be quantified relative to the total available nesting areas, because the loss of nesting beaches through development or alteration could extirpate local populations.

6. Efforts to improve TED technology and explore other methods to conserve sea turtles should be continued, including research on the effectiveness of regulations.

Subsequent Actions

The agency plans to carefully evaluate the National Academy of Sciences report, the public comments received on the report's findings, and all other relevant information before preparing recommendations for submission to Congress. Based on consultations with interested and affected parties, the agency may propose changes to its current sea turtle protection program.

Dated: June 1, 1990.

James E. Douglas, Jr.,

Deputy Assistant Administrator for Fisheries.

[FR Doc. 90-13154 Filed 6-6-90; 8:45 am]

BILLING CODE 3510-22-M

[Docket No. 900523-0123]

Summer Flounder Fishery

AGENCY: National Marine Fisheries Service (NMFS), NOAA, Commerce.

ACTION: Notice of control date for entry into the fishery for summer flounder, scup, and black sea bass.

SUMMARY: This notice announces that anyone entering the summer flounder, scup, and black sea bass fishery after January 26, 1990, (control date) will not be assured of future access to the summer flounder, scup, and black sea bass resources if a management regime is developed and implemented that limits the number of participants in the fishery. This announcement is necessary for public awareness of a potential eligibility criterion for access to the summer flounder, scup, and black sea bass resources. This announcement does not prevent any other date for eligibility in the fishery or another method of controlling fishing effort from being proposed and implemented. The intended effect of this announcement is to discourage new entry into the fishery based on speculation while discussions continue on whether and how access to the summer flounder, scup, and black sea bass resources should be controlled.

FOR FURTHER INFORMATION CONTACT: John C. Bryson (Executive Director, Mid-Atlantic Fishery Management Council), 302-674-2331; or Kathi Rodrigues (Resources Policy Analyst, Northeast Region, NMFS), 508-281-9324.

SUPPLEMENTARY INFORMATION: The Fishery Management Plan for the Summer Flounder Fishery (FMP) was developed by the Mid-Atlantic Fishery Management Council (Council) and implemented through regulations published on November 3, 1988 (53 FR 39475). The FMP established a minimum size for summer flounder and a

mechanism for increasing the minimum size if trends in fishing mortality so indicate, requires that permitted vessels comply with the stricter of FMP or state minimum size limits, prohibits retention of summer flounder by foreign fishermen, and requires annually renewable vessel permits. Despite these measures, the best available scientific evidence indicates that the summer flounder resource is currently overfished.

The Council's efforts to develop more effective measures for summer flounder have been frustrated by the mixed-species nature of the fishery. Both scup and black sea bass, which are overexploited and fully exploited, respectively, are harvested in conjunction with summer flounder. Consequently, the Council has undertaken development of Amendment 1 to the FMP, which is expected to, among other measures, add scup and black sea bass to the management unit.

On January 25, 1990, the Council's Demersal Species Committee (Committee) discussed problems in the fishery with its industry advisors and interested members of the public. In a subsequent meeting on January 26, 1990, the Committee, with several members of the public in attendance, considered and discussed issues raised during the advisory meeting of the previous day. During this meeting, the Committee voted to recommend to the Council January 26, 1990, as a control date for entry of vessels into the fishery for the species assemblage currently considered for Amendment 1. At its regular meeting on February 28—March 1, 1990, the full Council passed a motion to establish January 26, 1990, as a control date.

Status of the Resources

Summer Flounder

The current rate of fishing mortality of summer flounder is estimated to be double the rate that would produce the maximum yield per recruit. Thus, gains in long-term yield from the summer flounder fishery and increases in stock size could be realized by significantly reducing fishing mortality from current levels. At present, as a direct result of high rates of fishing mortality, both commercial and recreational catches of summer flounder are comprised primarily of age 0–2 fish. Individuals of this species have been known to live up to 20 years, yet older, larger fish are now infrequent in the landings. This indicates a severely compressed age composition, which poses substantial risks to recruitment as older, more fecund spawning adults are too rapidly removed from the population.

Scup

Commercial scup landings have declined substantially since the peak landings recorded in 1981; landings in 1988 decreased to 27 percent below the average annual landings for the period 1979–1988, and were the lowest for any year during that 10-year period. In addition, catch per unit effort (CPUE) values for scup caught by otter trawlers in southern New England decreased by almost 40 percent. Since 1982, dramatic declines in scup landings and CPUE have also been measures for the North Carolina winter trawl fishery.

Abundance indices from NMFS trawl surveys, and surveys conducted by the States of Massachusetts, Rhode Island, and Connecticut indicate that recent adult biomass levels are low. Current estimates of fishing mortality also indicate that exploitation of scup is excessive.

Black Sea Bass

Recent information on the population dynamics of black sea bass in the Mid-Atlantic Bight is lacking. However, studies conducted in the mid-1970s concluded that black sea bass were being overharvested in the Mid-Atlantic area. These studies also indicate that, although black sea bass are fully recruited to the trap and trawl fisheries by ages 2 and 3, respectively, the optimum age for harvest based on yield per recruit analysis is 6 years. Consequently, black sea bass appear to be fully exploited at present.

Status of the Fishery

The Mid-Atlantic mixed species trawl fishery, which relies principally on summer flounder, scup, and black sea bass, also harvests significant quantities of species important to the southern New England trawl fishery. These two fisheries tend to overlap in the Southern New England/Mid-Atlantic Bight area due to stock migrations.

Generally, fishing activity follows the species' migrations. Although the majority of landings are taken by otter trawls, summer flounder, scup, and black sea bass are landed by many other types of fishing gear: Midwater trawls, pots and traps, gillnets, pound nets and hand lines. At any particular time, fishermen may target a single species with certain gear, but significant bycatch of other species usually occurs in conjunction with the targeted species, depending on the fishing technique.

The occurrence of summer flounder, scup, and black sea bass, and other species, in commercial catches of the Mid-Atlantic and Southern New England regions complicates the identification of appropriate and effective management strategies. Close coordination of regulatory measures is therefore necessary to manage this species assemblage. Controlling effort or entry into the fishery is an option the Council intends to consider.

Nearly all the major groundfish fisheries in New England (haddock, yellowtail flounder, redfish, cod, etc.) operate on stocks that are severely depleted. Declines have also been noted in South Atlantic and Gulf of Mexico fishery resources. Consequently, it is probable that increasing effort will be directed towards the Southern New England/Mid-Atlantic species of summer flounder, scup, and black sea bass, exacerbating current problems of high exploitation. These stocks also support important recreational fisheries that account for a significant proportion of total landings. In addition, as summer flounder resources continue to decline, more effort will be directed towards the somewhat more abundant black sea bass. Because of the potential for an increased number of entrants into the fishery, increases in effort by present participants, as well as technological advances that have increased the efficiency of gear, there is a need to examine reductions in effort.

Intent and Possible Future Action

The Council will address these problems in Amendment 1 to the FMP. The Council's intent in making this announcement is to discourage speculative entry into the summer flounder, scup, or black sea bass fishery while potential management regimes to control access into the fishery are discussed and possibly developed by the Council. The control date will help to distinguish *bona fide*, established fishermen from speculative entrants to the fishery. Although fishermen are hereby notified that entering the fishery after the control date will not assure them of future access to the summer flounder, scup, or black sea bass fishery on the grounds of previous participation, other qualifying criteria also may be applied for entry.

This announcement hereby establishes January 26, 1990, for potential use in determining historical or traditional participation in the summer flounder, scup, or black sea bass fishery. The action does not commit the Council to develop any particular management regime or any specific criteria for determining entry to the summer flounder, scup, or black sea bass fishery. Fishermen are not guaranteed future participation in the summer flounder, scup, or black sea bass fishery,

regardless of their date of entry or intensity of participation in the fishery before or after the control date.

The Council may choose a different control date, or it may choose a management regime that does not make use of such a date. The Council may choose to give variably weighted consideration to fishermen in the fishery before and after the control date. The Council may choose also to take no further action to control entry or access to the fishery. Any action by the Council will be taken pursuant to the requirements for FMP development established under the Magnuson Fishery Conservation and Management Act.

Authority: 16 U.S.C. 1801 *et seq.*

Dated: June 1, 1990.

William W. Fox, Jr.,

Assistant Administrator for Fisheries, National Marine Fisheries Service.

[FR Doc. 90-13240 Filed 6-6-90; 8:45 am]

BILLING CODE 3510-22-M

Pacific Fishery Management Council; Public Meetings

AGENCY: National Marine Fisheries Service, NOAA, Commerce.

The Pacific Fishery Management Council's Groundfish Limited Entry Amendment Drafting and Oversight Committees will hold a public meeting on June 19-20, 1990, at the Pacific Council's chamber, room 440, Metro Building, 2000 SW First Avenue, Portland, OR. The Committees will begin the meeting on June 19 at 8 a.m., and will adjourn on June 20 by 3 p.m.

The Committees will discuss their recommendation on permit qualification requirements for vessels participating in the underutilized species fisheries, review the draft limited entry amendment to the groundfish fishery management plan, and review their July 1990 report to the Council on a buy-back program, vessels under construction, and a definition of longline gear. The meeting is open to the public.

For more information contact Lawrence D. Six, Executive Director, Pacific Fishery Management Council, 2000 SW First Avenue, Portland, OR 97201; *telephone* (503) 326-6352.

Dated: June 4, 1990.

David S. Crestin,

Deputy Director, Office of Fisheries Conservation and Management, National Marine Fisheries Service.

[FR Doc. 90-13241 Filed 6-6-90; 8:45 am]

BILLING CODE 3510-22-M

Pacific Fishery Management Council; Public Meeting

AGENCY: National Marine Fisheries Service, NOAA, Commerce.

The Pacific Fishery Management Council's Anchovy Advisory Subpanel and Plan Development Team will hold a public meeting on June 22, 1990, starting at 1:30 p.m., at the National Marine Fisheries Service, Southwest Regional Office, 300 South Ferry Street, Terminal Island, CA. The agenda includes a review of last season's fishery, the 1990 spawning biomass estimate, and the proposed quotas for the 1990-1991 fishery.

For more information contact Lawrence D. Six, Executive Director, Pacific Fishery Management Council, 2000 SW First Avenue, Portland, OR 97201; *telephone* (503) 326-6352.

Dated: June 4, 1990.

David S. Crestin,

Deputy Director, Office of Fisheries Conservation and Management, National Marine Fisheries Service.

[FR Doc. 90-13242 Filed 6-6-90; 8:45 am]

BILLING CODE 3510-22-M

Pacific Fishery Management Council; Public Meeting

AGENCY: National Marine Fisheries Service, NOAA, Commerce.

The Pacific Fishery Management Council's Groundfish Management Team (GMT) will hold a public meeting on June 12, 1990, at the Mark O. Hatfield Marine Science Center, Marine Science Drive, room NAL 136, Newport, OR. The GMT will begin its meeting at 1 p.m., on June 12 and will adjourn at 4:30 p.m., on June 14.

The GMT will review the progress of the 1990 groundfish fisheries and make preliminary projections of the annual harvest for major species. The GMT also will review West Coast groundfish fishery plan amendments regarding limited entry and discuss proposed standards to prevent overfishing. The GMT will report on yellowtail rockfish stock assessment, discuss revision of the sport bag limit for lingcod in California and the season opening date for the nontrawl (primarily longline and trap) fishery for sablefish in 1991.

The GMT will prepare its recommendations to the Pacific Council on west coast groundfish fisheries management for the July 11-12, 1990, Council Meeting in Portland.

For more information contact Lawrence D. Six, Executive Director, Pacific Fishery Management Council, 2000 SW. First Avenue, Portland, OR 97201; telephone: (503) 326-6352.

Dated: June 1, 1990.

David S. Crestin,

Deputy Director, Office of Fisheries Conservation and Management, National Marine Fisheries Service.

[FR Doc. 90-13158 Filed 6-6-90; 8:45 am]

BILLING CODE 3510-22-M

Endangered Species; Application for Permit; Dr. Michael K. Saiki, U.S. Fish and Wildlife Service

Notice is hereby given that the Applicant has applied in due form for a Permit to take endangered species as authorized by the Endangered Species Act of 1973 (16 U.S.C. 1531-1543) and the National Marine Fisheries Service regulations governing endangered fish and wildlife permits (50 CFR Part 217-222).

1. *Applicant*:
Dr. Michael K. Saiki, U.S. Fish and Wildlife Service, National Fisheries Contaminant Research Center, Field Research Station—Dixon, 6924 Tremont Road, Dixon, California 95620.

2. *Type of Permit*: Scientific Research.

3. *Name and Number of Species:* Winter-run chinook salmon (*Oncorhynchus tshawytscha*), 2,000 juveniles.

4. *Type of Take*: The applicant proposes to take up to 2,000 juvenile winter-run chinook salmon during the course of research on contaminant threats to juvenile chinook by acidmine wastes from the Spring Creek drainage in the Upper Sacramento River. The investigation includes a study of heavy metals and other trace elements that have accumulated in the salmon. In order to conduct the study, the investigators plan to collect about 2,000 juvenile salmon primarily from the fall and late-fall runs. However, the collection schedule is such that juvenile winter-run salmon could also occur at sampling sites.

5. *Location and Duration of Activity*: Sacramento River, California at 4 locations in Shasta and Tehama counties from June 1, 1990 to May 31, 1991.

Written data or views, or requests for a public hearing on this application should be submitted to the Assistant Administrator for Fisheries, National Marine Fisheries Service, U.S. Department of Commerce, 1335 East West Highway, room 7324, Silver Spring, Maryland 20910, within 30 days of the publication of this notice. Those individuals requesting a hearing should set forth the specific reasons why a

hearing on this particular application would be appropriate. The holding of such hearing is at the discretion of the Assistant Administrator for Fisheries. All statements and opinions contained in this application are summaries of those of the Applicant and do not necessarily reflect the views of the National Marine Fisheries Service.

Documents submitted in connection with the above application are available for review by interested persons in the following offices:

Office of Protected Resources, National Marine Fisheries Service, 1335 East West Highway, Silver Spring, Maryland 20910;

Director, Southwest Region, National Marine Fisheries Service, 300 South Ferry Street, Terminal Island, California 90731-7514.

Dated: June 1, 1990.

Nancy Foster,

Director, Office of Protected Resources, National Marine Fisheries Service.

[FR Doc. 90-13161 Filed 6-6-90; 8:45 am]

BILLING CODE 3510-22-M

Marine Mammals: Issuance of Permit; Southwest Fisheries Science Center, NMFS (P77#40)

On March 22, 1990, notice was published in the **Federal Register** (55 FR 10644) that an application had been filed by the Southwest Fisheries Science Center, National Marine Fisheries Service, for a scientific research/propagation & enhancement permit to take Hawaiian monk seals (*Monachus schauinslandi*).

Notice is hereby given that on May 31, 1990, as authorized by the provisions of the Marine Mammal Protection Act of 1972 (16 U.S.C. 1361-1407) and the Endangered Species Act of 1973 (16 U.S.C. 1531-1543), the National Marine Fisheries Service issued a Permit for the above taking subject to certain conditions set forth therein.

Issuance of this Permit is based on a finding that the proposed taking is consistent with the purposes and policy of the Marine Mammal Protection Act, and on a finding that such permit; (1) Was applied for in good faith; (2) will not operate to the disadvantage of the endangered species which is the subject of this permit; (3) and will be consistent with the purposes and policies set forth in section 2 of the Endangered Species Act of 1973.

This permit was issued in accordance with and is subject to part 216 and parts 220-222 of title 50 CFR, the National Marine Fisheries Service regulations governing marine mammal and endangered species permits. The Service has determined that this research satisfies the issuance criteria for scientific research permits. The taking is required to further a bona fide scientific purpose and does not involve unnecessary duplication of research. No lethal taking is authorized.

The Permit is available for review by appointment in the following offices:

Office of Protected Resources and Habitat Programs, National Marine Fisheries Service, 1335 East West Highway, Room 7324, Silver Spring, Maryland 20910 (301/427-2289);

Director, Southwest Region, National Marine Fisheries Service, 300 South Ferry Street, Terminal Island, California 90731-7451 (213/514-6196); and

Coordinator, Pacific Area Office, Southwest Region, National Marine Fisheries Service, NOAA, 2570 Dole Street, Room 106, Honolulu, Hawaii 96822-2396 (808/955-8831).

Dated: May 31, 1990.

Nancy Foster,

Director, Office of Protected Resources and Habitat Programs, National Marine Fisheries Service.

[FR Doc. 90-13162 Filed 6-6-90; 8:45 am]

BILLING CODE 3510-22-M

Marine Mammals; Application for Modification; Ms. Nancy Black (P36A)

Notice is hereby given that Ms. Nancy Black, Moss Landing Marine Laboratories, P.O. Box 450, Moss Landing, California 95039, requested a modification of Permit No. 630 issued on April 13, 1988 (53 FR 12803), under the authority of the Marine Mammal Protection Act of 1972 (16 U.S.C. 1361-1407) and the Regulations Governing the Taking and Importing of Marine Mammals (50 CFR, part 216).

Permit No. 603 authorized the Holder to inadvertently harass an unspecified number of Pacific white-sided dolphins during aerial and boat surveys for photo-identification studies. The Permit also authorized the Holder to capture, tag and release up to four Pacific white-sided dolphins. The Holder has tagged three animals.

The Holder requests modification of Permit No. 603 to allow three additional animals to be tagged for a total of seven (7) to be tagged under this Permit. She proposes tagging two animals at a time, one pair in September and one pair in October. The Holder believes that tagging two animals on the same day within the same school will improve the odds of tracking at least one of the animals in case of tag failure or offshore movement.

Also, animals can be tracked simultaneously and data can be compared for two dolphins from the same school; looking for patterns in surface-dive parameters and behaviors during the fall season.

Concurrent with the publication of this notice in the **Federal Register**, the Secretary of Commerce is forwarding copies of this application to the Marine Mammal Commission and the Committee of Scientific Advisors.

Written data or views, or requests for a public hearing on this modification request should be submitted to the Assistant Administrator for Fisheries, National Marine Fisheries Service, U.S. Department of Commerce, 1335 East West Hwy., Room 7324, Silver Spring, Maryland 20910, within 30 days of the publication of this notice. Those individuals requesting a hearing should set forth the specific reasons why a hearing on this particular application would be appropriate. The holding of such hearing is at the discretion of the Assistant Administrator for Fisheries. All statements and opinions contained in this modification request are summaries of those of the Applicant and do not necessarily reflect the views of the National Marine Fisheries Service.

Documents submitted in connection with the above modification request are available for review by interested persons in the following offices:

By appointment: Office of Protected Resources, National Marine Fisheries Service, 1335 East West Hwy., suite 7324, Silver Spring, Maryland 20910 (tel: 301/427-2289); and

Director, Southwest Region, National Marine Fisheries Service, 300 South Ferry Street, Terminal Island, California 90731.

Dated: May 31, 1990.

Nancy Foster,

Director, Office of Protected Resources.

[FR Doc. 90-13160 Filed 6-6-90; 8:45 am]

BILLING CODE 3510-22-M

Marine Mammals; Application for Modification of Permit; West Coast Whale Research Foundation (P349A)

Notice is hereby given that Mr. Dan McSweeney, West Coast Whale Research Foundation requested a modification of Permit No. 698 issued on February 16, 1990 (55 FR 6815), under the authority of the Marine Mammal Protection Act of 1972 (16 U.S.C. 1361-1407) the Regulations Governing the Taking and Importing of Marine Mammals (50 CFR part 216), the Endangered Species Act (16 U.S.C. 1361-

1543), and the regulations governing endangered species permits.

Permit No. 698 authorizes the inadvertent harassment of up to 600 humpback whales (*Megaptera novaeangliae*) in Hawaii and up to 400 in Alaska during the course of scientific studies. The application to modify Permit No. 698 requests authority to conduct opportunistic photo-ID studies of up to 300 pilot whales (*Globicephala melaena*), 50 sperm whales (*Physeter catodon*), 200 false killer whales (*Pseudorca crassidens*), 100 pygmy killer whales (*Kogia breviceps*), 80 killer whales (*Orcinus orca*), 50 Blainsville beaked whales (*Mesoplodon europaeus*), 50 Cuvier's beaked whales (*Ziphius cavirostris*), 300 melon-headed whales (*Peponocephala electra*), 200 spotted dolphins (*Stenella attenuata*), 200 spinner dolphins (*Stenella longirostris*), 50 rough toothed (*Steno bredanensis*), and 100 bottlenose dolphins (*Tursiops sp.*) The benign research techniques used, or the areas of study, will not change from those described in the original permit.

Concurrent with the publication of this notice in the **Federal Register**, the Secretary of Commerce is forwarding copies of this application to the Marine Mammal Commission and the Committee of Scientific Advisors.

Written data or views, or requests for a public hearing on this modification request should be submitted to the Assistant Administrator for Fisheries, National Marine Fisheries Service, U.S. Department of Commerce, 1335 East West Hwy., room 7324, Silver Spring, Maryland 20910, within 30 days of the publication of this notice. Those individuals requesting a hearing should set forth the specific reasons why a hearing on this particular application would be appropriate. The holding of such hearing is at the discretion of the Assistant Administrator for Fisheries. All statements and opinions contained in this modification request are summaries of those of the Applicant and do not necessarily reflect the views of the National Marine Fisheries Service.

Documents submitted in connection with the above modificatiom request are available for review by interested persons in the following offices:

By appointment: Office of Protected Resources, National Marine Fisheries Service, 1335 East West Hwy., suite 7324, Silver Spring, MD 20910;

Director, Southwest Region, National Marine Fisheries Service, 300 South Ferry Street, Terminal Island, CA 90731;

Pacific Area Coordinator, Southwest Region, National Marine Fisheries Service, 2570 Dole Street, room 106, Honolulu, HI 96822-2396; and

Director, Alaska Region, National Marine Fisheries Service, 709 West 9th Street, Juneau, AK 99802.

Dated: May 31, 1990.

Nancy Foster,

Director, Office of Protected Resources.

[FR Doc. 90-13159 Filed 6-6-90; 8:45 am]

BILLING CODE 3510-22-M

DEPARTMENT OF DEFENSE

Department of the Navy

CNO Executive Panel; Closed Meeting

Pursuant to the provisions of the Federal Advisory Committee Act (5 U.S.C. App. 2), notice is hereby given that the Chief of Naval Operations (CNO) Executive Panel Energy Task Force will meet 19-20 July 1990 from 9 a.m. to 5 p.m., at 4401 Ford Avenue, Alexandria, Virginia. This session will be closed to the public.

The purpose of this meeting is to assess the Navy's potential role in strategic defense architecture, and related intelligence. The entire agenda for the meeting will consist of discussions of key issues regarding strategic defense systems in support of U.S. national security. These matters constitute classified information that is specifically authorized by Executive Order to be kept secret in the interest of national defense and are, in fact, properly classified pursuant to such Executive Order. Accordingly, the Secretary of the Navy has determined in writing that the public interest requires that all sessions of the meeting be closed to the public because they will be concerned with matters listed in section 552b(c)(1) of title 5, United States Code.

For further information concerning this meeting, contact:

Lelia V. Carnevale, Secretary to the CNO Executive Panel Advisory Committee, 4401 Ford Avenue, room 601, Alexandria, Virginia 22302-0268, Phone (703) 756-1205.

Dated: May 30, 1990.

Sandra M. Kay,

Department of the Navy, Alternate Federal Register, Liaison Officer.

[FR Doc. 90-13119 Filed 6-6-90; 8:45 am]

BILLING CODE 3810-AE-M

Naval Research Advisory Committee; Closed Meeting

Pursuant to the provisions of the Federal Advisory Committee Act (5 U.S.C. App. 2), notice is hereby given that the Naval Research Advisory Committee Panel on Suppression of Enemy Fighter Defenses Over Land in the Year 2000 and Beyond will meet on June 25-26, 1990, at the Center for Naval Analyses, 4401 Ford Avenue, Alexandria, Virginia. The meeting will commence at 8 a.m. and terminate at 5 p.m. on June 25; and commence at 8 a.m. and terminate at 4 p.m. on June 26, 1990. All sessions of the meeting will be closed to the public.

The purpose of the meeting is to provide briefings for the panel members related to the ability of U.S. naval forces to suppress enemy fighter defenses over land in support of strike operations, or ground operations in the year 2000 and beyond. The agenda will include briefings and discussions on technology updates, industry perspectives, tactics and deficiencies. These briefings and discussions will contain classified information that is specifically authorized under criteria established by Executive Order to be kept secret in the interest of national defense and is in fact properly classified pursuant to such Executive Order. The classified and non-classified matters to be discussed are so inextricably intertwined as to preclude opening any portion of the meeting. Accordingly, the Secretary of the Navy has determined in writing that the public interest requires that all sessions of the meeting be closed to the public because they will be concerned with matters listed in section 552b(c)(1) of title 5, United States Code.

For further information concerning this meeting contact:

Commander John Hrenko, U.S. Navy, Office of Naval Research, 800 North Quincy Street, Arlington, VA 22217-5000, Telephone Number: (202) 696-4488.

Dated: June 1, 1990.

Sandra M. Kay,

Alternate Federal Register, Liaison Officer.

[FR Doc. 90-13120 Filed 6-6-90; 8:45 am]

BILLING CODE 3810-AE-M

Naval Research Advisory Committee; Closed Meeting

Pursuant to the provisions of the Federal Advisory Committee Act (5 U.S.C. App. 2), notice is hereby given that the Naval Research Advisory Committee Panel on Determining the Impact of Advancing Technology on Exercise Reconstruction and Data Collection will meet on June 20-21, 1990. The meeting will be held at the Fleet Combat Training Center, Atlantic, Dam Neck, Virginia Beach, Virginia; Commander, Tactical Wings, Atlantic,

Naval Air Station Oceana, Virginia Beach, Virginia; the ASW Training Group, Atlantic, Norfolk, Virginia; Commander-in-Chief, U.S. Atlantic Fleet, Norfolk, Virginia; and the Center for Naval Analyses Detachment, Naval Base, Norfolk, Virginia. The meeting will commence at 8 a.m. and terminate at 4:30 p.m. on June 20 and 21, 1990. All sessions of the meeting will be closed to the public.

The purpose of the meeting is to provide briefings for the panel members related to the impact of advancing technology on exercise reconstruction and data collection. The agenda will include briefings and discussions addressing the threat, training, and Fleet requirements for data collection and analysis and exercise reconstruction techniques and procedures. These briefings and discussions will contain classified information that is specifically authorized under criteria established by Executive order to be kept secret in the interest of national defense and is in fact properly classified pursuant to such Executive order. The classified and non-classified matters to be discussed are so inextricably intertwined as to preclude opening any portion of the meeting. Accordingly, the Secretary of the Navy has determined in writing that the public interest requires that all sessions of the meeting be closed to the public because they will be concerned with matters listed in section 552b(c)(1) of title 5, United States Code.

For further information concerning this meeting contact:

Commander John Hrenko, U. S. Navy, Office of Naval Research, 800 North Quincy Street, Arlington, VA 22217-5000, Telephone Number: (202) 696-4488.

Dated: May 30, 1990.

Sandra M. Kay,

Alternate Federal Register, Liaison Officer.

[FR Doc. 90-13121 Filed 6-6-90; 8:45 am]

BILLING CODE 3810-AE-M

Naval Research Advisory Committee; Closed Meeting

Pursuant to the provisions of the Federal Advisory Committee Act (5 U.S.C. App.), notice is hereby given that the Naval Research Advisory Committee will meet on July 16-20, and July 23-27, 1990 at the Naval Ocean Systems Center, San Diego, California. All sessions of the meeting will commence at 8:30 a.m. and terminate at 5 p.m. on all days. All sessions of the meeting will be closed to the public.

The purpose of the meeting is to discuss basic and advanced research. The agenda for the meeting will include briefings and discussions related to Suppression of Enemy Fighter Defenses Over Land in the Year 2000 and Beyond, Determining the Impact of Advancing Technology on Exercise Reconstruction and Data Collection, and Aviator Physical Stress. These briefings and discussions will contain classified information that is specifically authorized under criteria established by Executive Order to be kept secret in the interest of national defense and is in fact properly classified pursuant to such Executive Order. The classified and non-classified matters to be discussed are so inextricably intertwined as to preclude opening any portion of the meeting. Accordingly, the Secretary of the Navy has determined in writing that the public interest requires that all sessions of the meeting be closed to the public because they will be concerned with matters listed in section 552b(c)(1) of title 5, United States Code.

For further information concerning this meeting contact: Commander John Hrenko, U. S. Navy, Office of Naval Research, 800 North Quincy Street, Arlington, VA 22217-5000, Telephone Number: (202) 696-4870.

Dated: June 1, 1990.

Sandra M. Kay,

Department of the Navy, Alternate Federal Register, Liaison Officer.

[FR Doc. 90-13122 Filed 6-6-90; 8:45 am]

BILLING CODE 3810-AE-M

DEPARTMENT OF ENERGY

Federal Energy Regulatory Commission

[Docket Nos. ER90-372-000, et al.]

Alabama Power Company, et al.; Electric Rate, Small Power Production, and Interlocking

Take notice that the following filings have been made with the Commission:

1. Alabama Power Co.

[Docket Nos. ER90-372-000]

May 29, 1990.

Take notice that Alabama Power Company on May 16, 1990, tendered for filing a Transmission Service Delivery Point Agreement for a delivery point covered by the Agreement between Alabama Power Company and Alabama Electric Cooperative, Inc., (AEC) for Transmission Service to Distribution Cooperative Members of AEC which was dated August 28, 1989 (Agreement). This Agreement has been designated Rate schedule FERC No. 147 by the FERC. The purpose of this agreement is to include a new delivery point under the Agreement.

Copies of the filing were served upon Alabama Electric Cooperative, Inc.

Comment date: June 13, 1990, in accordance with Standard Paragraph E at the end of this notice.

2. Arizona Public Service Co.

[Docket Nos. ER89-265-003 and EL89-26-000]

May 29, 1990.

Take notice that on May 10, 1990, Arizona Public Service Company (APS) tendered for filing a Compliance Refund Report which reflects the Rate Settlement Agreement between Arizona Public Service Company and Citizens Utilities Company (Citizens) as authorized by the Commission's letter of approval dated April 12, 1990. There were no refund amounts owing to Citizens under the terms of the Rate Settlement Agreement.

Copies of this filing have been served on Citizens and the Arizona Corporation Commission.

Comment date: June 13, 1990, in accordance with Standard Paragraph E at the end of this notice.

3. Union Electric Co.

[Docket No. ER84-560-028]

May 29, 1990.

Take notice that on May 1, 1990, Union Electric Company (Union) tendered for filing pursuant to the Commission's letter dated December 14, 1989, its report on any refunds of amounts collected in excess of the amended settlement rates between Union and the City of Hannibal. Union states that no refunds are necessary, and provides an explanation of this conclusion.

Comment date; June 13, 1990, in accordance with Standard Paragraph E end of this notice.

4. Union Electric Co.

[Docket No. ER84-560-029]

May 29, 1990.

Take notice that on May 1, 1990, Union Electric Company (Union) tendered for filing pursuant to the Commission's letter dated December 14, 1989, its report on any refunds of amounts collected in excess of the amended settlement rates between Union and the City of Kirkwood. Union states that no refunds are necessary, and provides an explanation of this conclusion.

Comment date: June 13, 1990, in accordance with Standard Paragraph E at the end of this notice.

5. South Carolina Public Service Authority

[Docket No. ES90-32-000]

May 29, 1990.

Take notice that on May 23, 1990, the South Carolina Public Service Authority ("Authority") file an application with the Federal Energy Regulatory Commission ("Commission"), pursuant to section 204 of the Federal Power Act, seeking authority to issue not more than $150 million in Tax-exempt commercial paper. The Authority asks, in the alternative, an order dismissing the application for lack of jurisdiction.

Comment date: June 21, 1990, in accordance with Standard Paragraph E at the end of this notice.

6. Kansas Power and Light Co.

[Docket No. ER90-382-000]

May 31, 1990.

Take notice that on May 21, 1990, the Kansas Power & Light Company (KPL) tendered for filing a newly executed renewal contract with the City of Morrill, Morrill, Kansas for wholesale electric service to the community. KPL states that this contract provides essentially for a ten year extension of the original terms of the presently approved contract. The proposed effective date is August 1, 1990. In addition, KPL states that copies of the contract have been mailed to the City of Morrill and the Kansas Corporation Commission.

Comment date: June 14, 1990, in accordance with Standard Paragraph E at the end of this notice.

7. Wisconsin Public Service Corp.

[Docket No. ER90-385-000]

May 31, 1990.

Take notice that on May 22, 1990, Wisconsin Public Service Corporation ("the Company") tendered for filing a new service agreement for all requirements service to the City of Marshfield, Wisconsin ("the City"). The new agreement transfers the City from partial requirements service to all requirements service. The Company, with the support of the City, has requested an effective date of May 1, 1990.

The Company states that copies of the executed servcice agreement were sent to the City and the Public Service Commission of Wisconsin.

Comment date: June 15, 1990, in accordance with Standard Paragraph E at the end of this notice.

8. Northern States Power Co.

[Docket No. ER88-72-001]

May 31, 1990.

Take notice that on May 21, 1990, Northern States Power Company tendered for filing its compliance refund report pursuant to the Commission's order issued March 20, 1990.

Comment date: June 15, 1990, in accordance with Standard Paragraph E at the end of this notice.

9. Metropolitan Edison Co.

[Docket No. ER90-388-000]

May 31, 1990.

Take notice that on May 24, 1990, Metropolitan Edison Company (Met-Ed) filed a change in its wholesale rates to increase those rates by $1,250,000 on an annual basis. Met-Ed requests an effective date of July 23, 1990.

Comment date: June 15, 1990, in accordance with Standard Paragraph E at the end of this notice.

10. Public Service Co. of New Mexico

[Docket Nos. ER78-338-005 and ER79-478-006]

May 31, 1990.

Take notice that on May 7, 1990, Public Service Company of New Mexico (PNM) tendered for filing its refund report in compliance with 18 CFR 35.19a, setting forth a refund made by PNM to the City of Gallup, New Mexico (City), as required by the Federal Energy Regulatory Commission's Order on Remand dated February 29, 1988 in FERC Dockets ER78-338, ER79-478 and ER80-313.

Comment date: June 14, 1990, in accordance with Standard Paragraph E at the end of this notice.

11. Newark Bay Cogeneration Partnership, L.P.

[Docket No. QF86-1014-002]

May 31, 1990.

On May 21, 1990, Newark Bay Cogeneration Partnership, L.P. (Applicant) c/o Community Energy Alternatives Incorporated, 1200 East Ridgewood Avenue, Ridgewood, New Jersey 07450, submitted for filing an application for recertification of a facility as a qualifying cogeneration facility pursuant to § 292.207 of the Commission's regulations. No determination has been made that the submittal constitutes a complete filing.

The topping-cycle cogeneration facility will be located in the City of Newark, Essex County, New Jersey. The facility will consist of two combustion turbine generating units, a heat recovery boiler and a steam turbine generator. Steam produced from the facility will be used for process applications. The primary energy source will be natural gas. Installation of the facility is expected to begin in December, 1990.

The certification of the facility was originally issued on December 9, 1986 to ENPEX Corporation (37 FERC ¶ 62,192 (1986)). The instant recertification is requested due to an increase of the net electric power production capacity from 80 MW to 132.4 MW, and an ownership change.

Comment date: July 9, 1990, in accordance with Standard Paragraph E at the end of this notice.

12. Coalinga Cogeneration Co.

[Docket No. QF87-107-001]

May 31, 1990.

On May 21, 1990, Coalinga Cogeneration Company (Applicant), of P.O. Box 91078, Bakersfield, California 93380, submitted for filing an application for recertification of a facility as a qualifying cogeneration facility pursuant to § 292.207 of the Commission's regulations. No determination has been made that the submittal constitutes a complete filing.

The topping-cycle cogeneration facility will be located in Fresno County, California. The facility will consist of a combustion turbine generating unit and a heat recovery boiler. Steam produced from the facility will be used for enhanced oil recovery. The primary energy source will be natural gas. The facility is planned to startup on September, 1991.

The certification of the facility was originally issued on April 9, 1987 to Texaco Producing Inc. (39 FERC ¶ 62,032 (1987)). The instant recertification is requested due to an increase of the net electric power production capacity from 24.4 MW to 37.09 MW, and an ownership change.

Comment date: July 19, 1990, in accordance with Standard Paragraph E at the end of this notice.

13. Public Service Company of Indiana, Inc.

[Docket No. ER90-383-000]

May 31, 1990.

Take notice that on May 21, 1990, Public Service Company of Indiana (PSI) tendered for filing a Notice of Succession concerning the name change from Public Service Company of Indiana, Inc. to PSI Energy, Inc.

PSI states that this change became effective April 20, 1990.

Comment date: June 15, 1990, in accordance with Standard Paragraph E at the end of this notice.

14. Public Service Company of New Mexico

[Docket No. ER90-384-000]

May 31, 1990.

Take notice that on May 21, 1990, Public Service Company of New Mexico (PNM) tendered for filing an Interim Transmission Capability Agreement and Agreement to Arbitrate Between El Paso Electric Company (EPE) and PNM (Interim Agreement). The Interim Agreement provides that during an interim period from April 6, 1990 through December 31, 1990, PNM will provide EPE with 30 MW of additional transmission service, above the amount EPE is currently purchasing from PNM. EPE has agreed to book these 30 MW as a contingent liability at a rate of $3.00/kW-month plus interest. The validity of this contingent liability will be determined as part of the final decision of the arbitrators under the Interim Agreement.

PNM requests waiver of the Commission's notice requirements to permit the Interim Agreement to become effective as of April 6, 1990.

Copies of the filing have been served upon EPE and the New Mexico Public Service Commission.

Comment date: June 15, 1990, in accordance with Standard Paragraph E at the end of this notice.

15. Missouri Basin Municipal Power Agency v. Midwest Energy Company and Iowa Resources, Inc.

[Docket No. EL90-31-000]

May 31, 1990.

Take notice that on May 22, 1990, Missouri Basin Municipal Power Agency (Missouri Basin) pursuant to the Commission's Rules of Practice and Procedure, 18 CFR 385.206 tendered for filing a complaint against Midwest Energy (Midwest Energy) and Iowa Resources, (Iowa Resources).

In its complaint Missouri Basin states that Midwest Energy and Iowa Resources plan to merge their electric utility operations without prior authorization of the Federal Energy Regulatory Commission. In addition, Missouri Basin states that this complaint is not to prevent the proposed merger, but merely a request that the Commission obtain a full explanation from Midwest Basin and Iowa Resources of this major utility merger transaction to assure compliance with section 203(a) of the FPA.

Comment date: July 2, 1990, in accordance with Standard Paragraph E at the end of this notice.

Standard Paragraph

E. Any person desiring to be heard or to protest said filing should file a motion to intervene or protest with the Federal Energy Regulatory Commission, 825 North Capitol Street, NE., Washington, DC 20426, in accordance with rules 211 and 214 of the Commission's Rules of Practice and Procedure (18 CFR 385.211 and 384.214). All such motions or protests should be filed on or before the comment date. Protests will be considered by the Commission in determining the appropriate action to be taken, but will not serve to make protestants parties to the proceeding. Any person wishing to become a party must file a motion to intervene. Copies of this filing are on file with the Commission and are available for public inspection.

Lois D. Cashell,

Secretary.

[FR Doc. 90-13126 Filed 6-6-90; 8:45 am]

BILLING CODE 6717-01-M

[Docket Nos. CP89-634-000, CP89-634-001, and CP89-615-000; and Docket Nos. CP89-629-000 and CP89-629-001]

Iroquois/Tennessee Phase I Pipeline Project Notice of Availability of Final Environmental Impact Statement; Iroquois Gas Transmission System and Tennessee Gas Pipeline Co.

June 1, 1990.

Notice is hereby given that the staff of the Federal Energy Regulatory Commission (FERC) has made available a final environmental impact statement (FEIS) on the natural gas pipeline facilities proposed in the above-referenced dockets and related nonjurisdictional facilities.

The FEIS was prepared to satisfy the requirements of the National Environmental Policy Act. The staff concludes that approval of the proposed project, with appropriate mitigating measures, including receipt of necessary permits and approvals, would have limited adverse environmental impact. The FEIS evaluates alternatives to the proposals.

Overall, the Iroquois Gas Transmission System (Iroquois) proposes to construct pipeline facilities capable of transporting up to 575,900 thousand cubic feet per day (Mcfd) of natural gas received from TransCanada PipeLines Limited. For reasons discussed in the FEIS, the FEIS analyzes a system to deliver only 422,900 Mcfd. The gas would be delivered to local distribution companies (LDCs), cogeneration, and electric generation customers in New York, New Jersey, and the southern New England area. Iroquois would also deliver gas to Tennessee Gas Pipeline Company (Tennessee) near Wright, New York and Stratford, Connecticut for redelivery to certain LDCs, cogeneration, and power generation customers in Connecticut, Massachusetts, New Hampshire, and Rhode Island. Iroquois would deliver additional natural gas at South Commack, New York, for exchange and redelivery by Texas Eastern Transmission Corporation to three LDCs in New Jersey.

The Phase I pipeline facilities covered in the FEIS include 369.4 miles of 24- and 30-inch-diameter pipeline and appurtenant facilities proposed by Iroquois and 46.6 miles of mainline looping, 13.8 miles of lateral loops and replacement, 2.3 miles of new pipeline extensions, 8,550 horsepower of compression, and appurtenant facilities proposed by Tennessee. Iroquois would transport 422,900 Mcfd of natural gas from the United States-Canada border near Waddington, New York for delivery in New York and Connecticut.

The FEIS will be used in the regulatory decision-making process at the FERC and may be presented as evidentiary material in formal hearings at the FERC. While the period for filing interventions in this case has expired, motions to intervene out-of-time can be filed with the FERC in accordance with the Commission's Rules of Practice and Procedure, 18 CFR 385.214(d). Further, anyone desiring to file a protest with the FERC should do so in accordance with 18 CFR 385.211.

The FEIS will be placed in the public files of the FERC, and is available for public inspection in the FERC's Public Reference and File Management Branch, Room 3308, 941 North Capitol Street, NE., Washington, DC 20426. Copies have been mailed to Federal, state, and local government agencies, interested individuals, public interest groups, newspapers, libraries, and parties of the proceeding.

A limited number of copies of the FEIS is available from the FERC's Public Reference and File Management Branch, telephone (202) 208-1371, or from Mr. Mark Jensen, Project Manager, Environmental Policy and Project Analysis Branch, Office of Pipeline and Producer Regulation, room 7312, 825 North Capitol Street, NE., Washington, DC 20426, telephone (202) 208-1121 or FTS 268-1121. When these copies are depleted, the FEIS will be available from the National Technical Information Service (NTIS), Springfield, Virginia. Call the NTIS at (703) 487-4780 to obtain the FEIS identification number and

information on how to order additional copies.

Lois D. Cashell,

Secretary.

[FR Doc. 90-13127 Filed 6-6-90; 8:45 am]

BILLING CODE 6717-01-M

[Project No. 4114-027]

Long Lake Energy Corp.; Availability of Environmental Assessment

May 31, 1990.

In accordance with the National Environmental Policy Act of 1969 and the Federal Energy Regulatory Commission's (Commission's) regulations, 18 CFR part 380 (Order No. 486, 52 FR 47897), the Office of Hydropower Licensing has reviewed the application for amendment of the major license for the Lower Saranac Project, issued June 26, 1987, and has prepared an Environmental Assessment (EA) for the proposed project. In the EA, the Commission's staff has analyzed the potential environmental impacts of the proposed project and has concluded that approval of the proposed project, with appropriate mitigative measures, would not constitute a major federal action significantly affecting the quality of the human environment.

Copies of the EA are available for review in the Public Reference Branch, Room 1000, of the Commission's offices at 825 North Capitol Street, NE., Washington, DC 20426.

Lois D. Cashell,

Secretary.

[FR Doc. 90-13128 Filed 6-6-90; 8:45 am]

BILLING CODE 6717-01-M

[Project No. 4684-012 New York]

Stillwater Hydro Partners, L.P.; Availability of Environmental Assessment

May 31, 1990.

In accordance with the National Environmental Policy Act of 1969 and the Federal Energy Regulatory Commission's regulations, 18 CFR part 380 (Order No. 486, 52 FR 47910), the Office of Hydropower Licensing (OHL) has reviewed the application for amendment of license for the Stillwater Hydroelectric Project to construct a 3.0-megawatt facility on the west bank of the Hudson River. The project is located at the existing Stillwater and Lock No. C-4 Dams in Saratoga and Rensselaer Counties, New York. The staff of OHL's Division of Project Compliance and Administration has prepared an Environmental Assessment (EA) for the proposed action. In the EA, staff concludes that approval of the amendment of license would not constitute a major federal action significantly affecting the quality of the human environment.

Copies of the EA are available for review in the Reference and Information Center, Room 3308, of the Commission's offices at 941 North Capitol Street, NE., Washington, DC 20426.

Lois D. Cashell,

Secretary.

[FR Doc. 90-13129 Filed 6-6-90; 8:45 am]

BILLING CODE 6717-01-M

[Docket Nos. CP90-1355-000, et al.]

Northwest Pipeline Corp. et al.; Natural Gas Certificate Filings

Take notice that the following filings have been made with the Commission:

1. Northwest Pipeline Corp.

[Docket No. CP90-1355-000]

May 29, 1990.

Take notice that on May 14, 1990, Northwest Pipeline Corporation (Northwest), 295 Chipeta Way, Salt Lake City, Utah 84108, filed in Docket No. CP90-1355-000, a request pursuant to § 157.205 of the Commission's Regulations under the Natural Gas Act (18 CFR 157.205) for authorization to add new delivery points and reallocate firm service among certain delivery points and increase certain delivery pressures under its sales Rate Schedule ODL-1 and storage service Rate Schedule SGS-1 with the Washington Water Power Company (Water Power) under Northwest's blanket certificate issued in Docket No. CP82-433-000 pursuant to section 7 of the Natural Gas Act, all as more fully set forth in the request which is on file with the Commission and open to public inspection.

Specifically, Northwest proposes to (1) add a new delivery point near Sandpoint, Idaho (the Schweitzer delivery point) for delivery of sales gas to Water Power; (2) reallocate portions of Northwest's maximum daily delivery obligation (MDDO) for sales gas to Water Power from the existing Bunker Hill, Idaho delivery point to the existing Kellogg, Idaho delivery point and from the existing Sandpoint, Idaho delivery point to the proposed Schweitzer delivery point; (3) add the existing Athol, Idaho and Keystone, Washington sales delivery points as storage service delivery points to Water Power; (4) reallocate portions of Northwest's maximum daily quantity (MDQ) storage deliveries to Water Power from the Bunker Hill delivery point to the existing Kellogg, Keystone, and Spokane Mead delivery points and from the existing Mica, Idaho delivery point to the existing Athol delivery point; and (5) increase the minimum delivery pressure for deliveries of sales and storage gas to Water Power at the existing Spokane and Spokane Mead delivery points in Spokane County, Washington.

The proposed reallocations are as shown below:

SALES SERVICE (ODL-1)

	Delivery point	MDDO existing therms)
Sandpoint (PGT)	33,670	16,835
Schweitzer (PGT)		16,835
Bunker Hill	500	0
Kellogg	40,760	41,260

STORAGE SERVICE (SGS-1)

Delivery point	MDQ existing (therms)	MDQ proposed (therms)
Athol (PGT)		500
Mica (PGT)	40,000	39,500
Bunker Hill	24,000	0
Kellogg	28,000	29,000
Keystone		1,000
Spokane Mead	486,000	508,000

Northwest also proposes to change the minimum delivery pressures at the Spokane Mead delivery point from 150 psig to 350 psig and at the Spokane delivery point from 200 psig to 350 psig under both its ODL-1 and SGS-1 Service Agreements with Water Power.

Northwest states that it does not propose to abandon the Bunker Hill delivery point, but will retain it for possible interruptible service.

Northwest further states that deliveries identified by (PGT) in the above tables are made by Pacific Gas Transmission Company (PGT) for Northwest from firm transportation service provided by PGT. Northwest asserts that on May 2, 1990, PGT filed in Docket No. CP90-1305-000 its request pursuant to Section 157.205 of the Commission's Regulations for authorization to construct the new Schweitzer Meter Station for delivery of gas to Northwest and to reassign a portion of the volumes presently authorized for delivery to Northwest at the existing Sandpoint and Mica delivery points to the new Schweitzer and the existing Athol delivery points.

Northwest avers that the total volumes authorized to be delivered to Water Power would not change as a result of the herein proposed delivery point changes; that Northwest's tariff does not prohibit the proposed addition

of delivery points and reallocation of MDDO between delivery points; and that Northwest has sufficient capacity to implement the proposed delivery point changes without detriment or disadvantage to any of Northwest's other customers.

Comment date: July 13, 1990, in accordance with Standard Paragraph G at the end of this notice.

2. Tennessee Gas Pipeline Co.

[Docket Nos. CP90-1408-000[1] CP90-1409-000]

May 29, 1990.

Take notice that on May 24, 1990, Tennessee Gas Pipeline Company (Tennessee), P.O. Box 2511, Houston Texas 77252 filed in the above referenced dockets, prior notice requests pursuant to §§ 157.205 and 284.223 of the Commission's Regulations under the Natural Gas Act for authorization to transport natural gas on behalf of various shippers under blanket certificates issued pursuant to section 7 of the Natural Gas Act, all as more fully set forth in the prior notice requests which are on file with the Commission and open to public inspection and in the attached appendix.

Information applicable to each transaction including the identity of the shipper, the type of transportation service, the appropriate transportation rate schedule, the peak day, average day, and annual volumes, and the docket numbers and initiation dates of the 120-day transactions under § 284.223 of the Commission's Regulations has been provided by Tennessee and is included in the attached appendix.

Tennessee also states that it would provide the service for each shipper under an executed transportation agreement, and that Tennessee would charge rates and abide by the terms and conditions of the referenced transportation rate schedules.

Comment date: July 13, 1990, in accordance with Standard Paragraph G at the end of this notice.

[1] These prior notice requests are not consolidated.

Docket No.	Shipper name	Peak day[1] avg. annual	Points of		Start-up date rate schedule	Related[3] dockets
			Receipt	Delivery		
CP90-1408-000	Nortech Energy Corporation	25,000 25,000 9,125,000	([2])	([2])	4/5/90 IT	ST90-3066-000
CP90-1409-000	Meridan Oil, Inc	200,000 200,000 73,000,000	Off LA, LA, TX, AL.	AL, MS, TN	4/3/90 IT	ST90-2626-000

[1] Quantities are shown in dekatherms unless otherwise indicated.
[2] Various existing points along Tennessee System.
[3] The CP docket corresponds to applicant's blanket transportation certificate. If an ST docket is shown, 120-day transportation service was reported in it.

3. Arkla Energy Resources a division of Arkla, Inc.

[Docket No. CP90-1404-000]

May 29, 1990.

Take notice that on May 22, 1990, Arkla Energy Resources, a division of Arkla Inc. (Arkla), 525 Milam Street, Shreveport, Louisiana 71151, filed in Docket No. CP90-1404-000 an application pursuant to § 157.205 of the Commission's Regulations under the Natural Gas Act (18 CFR 157.205) for authorization to transport natural gas on behalf of EnTrade Corporation (Entrade), under Arkla's blanket certificate issued in Docket No. CP88-820-000 pursuant to section 7 of the Natural Gas Act, all as more fully set forth in the request which is on file with the Commission and open to public inspection.

Arkla proposes to transport, on an interruptible basis, up to 50,000 MMBtu per day for Entrade. Arkla states that construction of facilities would not be required to provide the proposed service.

Arkla further states that the maximum day, average day, and annual transportation volumes would be approximately 50,000 MMBtu, 50,000 MMBtu and 18,250,000 MMBtu respectively.

Arkla advises that service under § 284.223(a) commenced April 1, 1990, as reported in Docket No. ST90-3095.

Comment date: July 13, 1990, in accordance with Standard Paragraph G at the end of this notice.

4. Texas Gas Transmission Corp.

[Docket No. CP90-1346-000]

May 30, 1990.

Take notice that on May 11, 1990, Texas Gas Transmission Corporation (Texas Gas), P.O. Box 1160, Owensboro, Kentucky 42302, filed in Docket No. CP90-1346-000 an application pursuant to section 7(c) of the Natural Gas Act for a certificate of public convenience and necessity authorizing the construction and operation of approximately 2.65 miles of 36-inch pipeline, looping Texas Gas' existing No. 1 and No. 2 26-inch mainline pipelines and No. 1 30-inch mainline pipeline located in Webster and Hopkins County, Kentucky, all as more fully set forth in the application which is on file with the Commission and open to public inspection.

Texas Gas states that during an extremely cold period in December of 1989, it experienced difficulty meeting the peak day delivery obligations on the north end of its mainline system. Texas Gas states that, under these temperature conditions, it was unable to sustain operating design efficiency in the Slaughters, Kentucky, to Hardinsburg, Kentucky, segment of its mainline system, which resulted in reduced pressure to the Hardinsburg Compressor Station and consequently reduced pressure in its mainline north of Hardinsburg. Texas Gas avers that the addition of the proposed pipeline loop would be the most acceptable method of recovering this lost efficiency. Texas Gas asserts that the addition of this pipeline loop will not increase Texas Gas' peak day capacity beyond presently certificated levels.

Texas Gas estimates the cost of the proposed facilities would be $3,240,000. Texas Gas proposes to finance the project from funds on hand.

Comment date: June 20, 1990, in accordance with Standard Paragraph F at the end of this notice.

5. Sea Robin Pipeline Co.

[Docket No. CP90-1403-000]

May 30, 1990.

Take notice that on May 22, 1990, Sea Robin Pipeline Company (Sea Robin), 600 Travis Street, P.O. Box 1478, Houston, Texas 77251-1478, filed on Docket No. CP90-1403-000 an application pursuant to section 7(b) of

the Natural Gas Act for permission and approval to partially abandon service to ten firm transporation customers, all as more fully set forth in the applications on file with the Commission and open to public inspection.

Sea Robin states that it proposes to reduce the contract demand quantity for 10 of its firm transportation customers by an amount specified by Sea Robin's Stipulation and Agreement in Docket No. RP86-94 *et al.*, filed with the Commission on January 5, 1990. It is stated that this reduction is in accordance with Article V, Paragraph D of the Settlement in which Sea Robin's firm transportation customers are allowed the option of reducing their contract demands on existing firm Rate Schedule-X transportation contracts to minimum levels specified in the Settlement. The following schedule summarizes the proposed reductions.

Firm transporter	Rate schedule	Docket No.	Existing MDQ per contract	Settlement MDQ	Proposed MDQ reduction
Tennessee	X-4	CP72-118-004	15,000	10,050	4,950
North. Nat	X-15	CP76-428	20,300	13,601	6,699
North. Nat	X-27	CP80-165	10,700	7,169	3,531
CNG	X-24	CP78-298	15,290	12,000	3,290
Columbia	X-33	CP85-432	500	335	165
Mid La	X-14	CP76-428	10,000	6,700	3,300
Transco	X-28	CP79-433	7,000	4,690	2,310
United	X-17	CP77-410-005	40,000	26,800	13,200
United	X-16	CP76-428-002	56,200	37,622	18,578
Natural	X-21	CP76-606	13,500	7,327	6,173
Natural	X-22	CP77-618	90,000	44,271	45,729
Natural	X-23	CP78-7	7,000	3,799	3,201
Southern	X-6	CP73-162	31,400	21,038	10,362

Comment date: June 20, 1990, in accordance with Standard Paragraph F at the end of this notice.

6. ANR Pipeline Co.

[Docket No. CP90-1411-000, CP90-1412-000, CP90-1413-000, CP90-1414-000, CP90-1415-000]

May 30, 1990.

Take notice that on May 24, 1990, ANR Pipeline Company (ANR), 500 Rennaissance Center, Detroit, Michigan 48243, filed in the respective dockets prior notice requests pursuant to §§ 157.205 and 284.223 of the Commission's Regulations under the Natural Gas Act for authorization to transport natural gas on behalf of various shippers under ANR's blanket certificate issued in Docket No. CP88-532-000 pursuant to section 7 of the Natural Gas Act, all as more fully set forth in the prior notice requests which are on file with the Commission and open to public inspection.[2]

Information applicable to each transaction, including the identity of the shipper, the peak day, average day and annual volumes, and the initiation service dates and related docket numbers of the 120-day transactions under § 284.223 of the Commission's Regulations, has been provided by ANR and is summarized in the attached appendix.

ANR states that each of the proposed services would be provided under an executed transportation agreement, and that ANR would charge the rates and abide by the terms and conditions of the appropriate transportation rate schedule. It is explained that the gas would be received by ANR at designated points on its system and would be delivered for the shippers' accounts at designated points of interconnection.

Comment date: July 16, 1990, in accordance with Standard Paragraph G at the end of this notice.

[2] These prior notice requests are not consolidated.

Docket No.	Shipper name	Peak day [3] avg. annual	Type of service	Start-up date	Related [3] dockets
CP90-1411-000	Hall-Houston Oil Co.	8,000 8,000 2,920,000	Interruptible	4/1/90	ST90-2658
CP90-1412-000	Texpar Energy, Inc.	50,000 50,000 18,250,000	Interruptible	4/1/90	ST90-2651
CP90-1413-000	Beloit Box Board Co.	280 280 102,200	Firm	4/1/90	ST90-2654
CP90-1414-000	Kimberly-Clark Corp.	4,030 4,030 1,470,950	Firm	4/1/90	ST90-2655
CP90-1415-000	James River Corp.	280 102,200 1,800 1,800 657,000	Firm	4/1/90	ST90-2656

[2] Quantities are shown in dt equivalent.
[3] ANR reported its 120-day transportation service in the referenced ST dockets.

7. North Canadian Marketing Corp.

[Docket No. CI90-101-000]

May 31, 1990.

Take notice that on May 10, 1990, North Canadian Marketing Corp. (NCMC) of 700, 112—4th Avenue, SW., SunLife Plaza 3, Calgary, Alberta, Canada T2P 4B2, filed an application pursuant to section 7 of the Natural Gas Act and the Federal Energy Regulatory Commission's (Commission) regulations thereunder for an unlimited-term blanket certificate with pregranted abandonment to authorize sales for resale of natural gas subject to the Commission's NGA jurisdiction including natural gas produced in Canada, all as more fully set forth in the application which is on file with the Commission and open for public inspection.

Comment date: June 19, 1990, in accordance with Standard Paragraph J at the end of this notice.

8. Chevron U.S.A. Inc.

[Docket No. CI89-302-002]

May 31, 1990.

Take notice that on May 11, 1990, Chevron U.S.A. Inc. (Chevron) of P.O. Box 3725, Houston, Texas 77253-3725, filed an application pursuant to sections 4 and 7 of the Natural Gas Act and the Fedeal Energy Regulatory Commission's (Commission) regulations thereunder to amend its lmited-term blanket certificate with pregranted abandonment previously issued by the Commission in Docket No. CI89-302-001 to include authorization to make sales for resale of imported natural gas and gas obtained through interstate pipeline discount interruptible sales service programs, all as more fully set forth in the application whch is on file with the Commission and open for public inspection.

Comment date: June 19, 1990, in accordance with Standard Paragraph J at the end of this notice.

9. Chevron Natural Gas Services, Inc.

[Docket No. CI87-736-002]

May 31, 1990.

Take notice that on May 11, 1990, Chevron Natural Gas Services, Inc. (CNGSI) of P.O. Box 3725, Houston, Texas 77253-3725, filed an application pursuant to sections 4 and 7 of the Natural Gas Act and the Federal Energy Regulatory Commission's (Commission) regulations thereunder to amend its unlimited-term blanket certificate with pregranted abandonment previously issued by the Commission in Docket No. CI87-736-001 to include authorization to make sales for resale of imported natural gas and gas obtained through interstate pipeline discount interruptible sales service programs, all as more fully set forth in the application which is on file with the Commission and open for public inspection.

Comment date: June 19, 1990, in accordance with Standard Paragraph J at the end of this notice.

10. PSI, Inc.

[Docket No. CI87-498-002]

May 31, 1990.

Take notice that on May 22, 1990, PSI, Inc. (PSI) of 1044 North 115th Street, Omaha, Nebraska 68154, filed an application pursuant to sections 4 and 7 of the Natural Gas Act and the Federal Energy Regulatory Commission's (Commission) regulations thereunder to amend its unlimited-term blanket certificate with pregranted abandonment previously issued by the Commission in Docket No. CI87-498-001 to include authorization to make sales for resale of imported gas, liquified natural gas and natural gas sold under any existing or subsequently approved pipeline blanket certifciate authorizing interruptible sales of surplus system supply, all as more fully set forth in the application which is on file with the Commission and open for public inspection.

Comment date: June 19, 1990, in accordance with Standard Paragraph J at the end of the notice.

11. Energy Marketing Exchange, Inc.

[Docket No. CI86-425-002]

May 31, 1990.

Take notice that on May 17, 1990, Energy Marketing Exchange, Inc. (EME) of 379 Thornall Street, Edison, New Jersey 08837, filed an application pursuant to sections 4 and 7 of the Natural Gas Act and the Federal Energy Regulatory Commission's (Commission) regulations thereunder to amend its unlimited-term blanket certificate with pregranted abandonment previously issued by the Commission in Docket No. CI86-425-001 to include authorization to make sales for resale of imported gas, liquified natural gas and natural gas sold under any existing or subsequently approved pipeline blanket certificate authorizing interruptible sales of surplus system supply, all as more fully set forth in the application which is on file with the Commission and open for public inspection.

Comment date: June 19, 1990, in accordance with Standard Paragraph J at the end of this notice.

12. Suncor, Inc.

[Docket No. CI90-102-000]

May 31, 1990.

Take notice that on May 11, 1990, Suncor, Inc. (Suncor) of 500, 4th Avenue, SW., 21st Floor, Calgary, Alberta, Canada T2P 2V5, filed an application pursuant to section 7 of the Natural Gas Act and the Federal Energy Regulatory Commission's (Commission) regulations thereunder for an unlimited-term blanket certificate with pregranted abandonment to authorize sales for resale of natural gas subject to the Commission's NGA jurisdiction, including Canadian-produced natural gas, all as more fully set forth in the application which is on file with the Commission and open for public inspection.

Comment date: June 19, 1990, in accordance with Standard Paragraph J at the end of this notice.

13. Great Lakes Gas Transmission Company

[Docket No. CP90-1389-000]

May 31, 1990.

Take notice that on May 17, 1990, Great Lakes Gas Transmission Company (Great Lakes), 2100 Buhl Building, Detroit, Michigan 48226, filed in Docket No. CP90-1389-000 an application pursuant to section 7(c) of the Natural Gas Act, for a certificate of public convenience and necessity authorizing Great Lakes to provide gas transportation service, on a firm basis, for Rochester Gas and Electric Corporation (Rochester), a New York gas distribution company, and to construct and operate facilities necessary to provide such service, all as more fully set forth in the application which is on file with the Commission and open to public inspection.

In particular, Great Lakes states that Rochester has requested that Great Lakes transport up to 102,500 Mcf per day (Rochester volumes) from various points of interconnection between the facilities of Great Lakes and ANR Pipeline Company (ANR Pipeline), located at Capac, Farwell, and Muttonville, Michigan (respectively, the Capac, Farwell, and Muttonville Delivery Points) to a point of interconnection between the facilities of Great Lakes and TransCanada Pipelines Limited (TransCanada) located on the international boundary, near St. Clair, Michigan (St. Clair Delivery Point).

The Rochester volumes are being purchased by Rochester from various domestic suppliers, received by ANR Pipeline at various receipt points into its system, for transportation and delivery

to Great Lakes at the Capac, Farwell, and Muttonville Delivery Points. Upon transportation and delivery by Great Lakes of the Rochester volumes to the St. Clair Delivery Point, TransCanada will transport and deliver the volumes to a proposed point of interconnection between the facilities of TransCanada and Empire State Pipeline (Empire), on the international boundary, near Niagara Falls, New York. The volumes will be transported by Empire to proposed points of interconnection between the facilities of Rochester and Empire.

To implement the arrangements, Great Lakes and Rochester have entered into a Transportation Service Agreement (Agreement) dated January 30, 1990. The Agreement provides for a 15-year term for the firm service. To provide the service, Great Lakes proposes to construct and/or install (1) two loops, totalling 16.0 miles of 36-inch diameter pipe, and (2) certain miscellaneous facilities, such as valve assemblies. The estimated cost of the proposed transmission facilities is $19,250,000. The facilities proposed in this application will be financed with funds generated internally, together with borrowings from banks or commercial paper if required. It is contemplated that any short term borrowings would be retired with funds generated internally.

In the event that the facilities of Empire, TransCanada, and Rochester are constructed and in-service prior to the availability of all of the Great Lakes facilities, Great Lakes has agreed to provide an interim service of the subject volumes to Rochester until such time as the facilities required by Great Lakes are completed. The interim service arrangements contemplate the delivery of the subject volumes to the interim receipt points in a manner that would facilitate Great Lakes' ability to transport the volumes. The interim receipt points are the Capac, Farwell, and Muttonville Receipt Points, as well as an additional, interim receipt point, which is an existing point of interconnection between the facilities of Great Lakes and MichCon, located at Belle River Mills, Michigan. Rochester has advised Great Lakes that it has made arrangements for the interim deliveries of volumes at such receipt points with ANR Pipeline and MichCon.

The Agreement provides for a rate for the service, of a monthly Demand-1 charge of $1.231 per Mcf of contract quantity, a Demand-2 charge of $0.04117 per Mcf multiplied by one-twelfth of the annual contract quantity, and a commodity charge of $0.05719 per Mcf. These demand and commodity charges are applicable for volumes for which the receipt, transportation, and delivery, are all within Great Lakes' Eastern Zone.

Comment date: June 21, 1990, in accordance with Standard Paragraph F at the end of this notice.

14. Transcontinental Gas Pipe Line Corp.

[Docket No. CP90-1417-000]

May 31, 1990.

Take notice that on May 24, 1990, Transcontinental Gas Pipe Line Corporation (Transco) P.O. Box 1396, Houston, Texas 77251, filed in Docket No. CP90-1417-000 a request pursuant to § 157.205 of the Commission's Regulations under the Natural Gas Act (18 CFR 157.205) for authorization to transport natural gas on behalf of Centran Corporation (Centran), under the authorization issued in Docket No. CP88-328-000 pursuant to section 7 of the Natural Gas Act, all as more fully set forth in the request which is on file with the Commission and open to public inspection.

Transco would perform the proposed interruptible transportation service for Centran, pursuant to a service agreement dated February 14, 1990 (system contract #000.3890). The term of the transportation agreement is from February 14, 1990, and shall remain in force and effect through March 16, 1990, and thereafter until terminated by Transco or Centran upon at least 30 days written notice to the other. Transco proposes to transport on a peak day up to 90,000 dt; on an average day up to 5,000 dt; and on an annual basis up to 32,850,000 dt of natural gas for Centran. Transco states that it would receive the gas at existing receipt points in offshore Texas and would deliver the gas at various existing delivery points in Louisiana and Georgia. It is alleged the rate to be charged Centran for the proposed transportation shall be in accordance with Transco's IT rate schedule. Transco avers that construction of facilities would not be required to provide the proposed service.

It is explained that the proposed service is currently being performed pursuant to the 120-day self implementing provision of § 284.223(a)(1) of the Commission's regulations. Transco commenced such self-implementing service on April 5, 1990, as reported in Docket No. ST90-2926-000.

Comment date: July 16, 1990, in accordance with Standard Paragraph G at the end of this notice.

Transcontinental Gas Pipe Line Corporation

[Docket No. CP90-1429-000 [3]]

15. Tennessee Gas Pipeline Company

[Docket No. CP90-1438-000]

May 31, 1990.

Take notice that the above referenced companies (Applicants) filed in the above referenced dockets, prior notice requests pursuant to §§ 157.205 and 284.223 of the Commission's Regulations under the Natural Gas Act for authorization to transport natural gas on behalf of various shippers under their blanket certificates issued pursuant to section 7 of the Natural Gas Act, all as more fully set forth in the prior notice requests which are on file with the Commission and open to public inspection and in the attached appendix.

Information applicable to each transaction, including the identity of the shipper, the type of transportation service, the appropriate transportation rate schedule, the peak day, average day, and annual volumes, and the docket numbers and initiation dates of the 120-day transactions under § 284.223 of the Commission's Regulations, has been provided by the Applicants and is included in the attached appendix.

The Applicants also state that each would provide the service for each shipper under an executed transportation agreement, and that the Applicants would charge the rates and abide by the terms and conditions of the referenced transportation rate schedules.

Comment date: July 16, 1990, in accordance with Standard Paragraph G at the end of the notice.

[3] These prior notices requests are not consolidated.

Docket No. (date filed)	Applicant	Shipper name	Peak day[2] avg. annual	Points of—		Start-up date rate schedule	Related[3] Dockets
				Receipt	Delivery		
CP90-1429-000 (5-25-90)	Transcontinental Gas Pipe Line Corporation.	Union Pacific Fuels, Inc....	50,000 20,000 18,250,000	Offshore LA	LA	4-1-90 IT	ST90-2846-000
CP90-1438-000 (5-29-90)	Tennessee Gas Pipeline Company.....	Jaywell Energy Corporation.	50,000 50,000 18,250,000	AL, MS, LA, TX, Offshore LA,	AL, MS, NY, NJ, PA, MD, VA, NC, SC, GA	4-18-90 IT	ST90-3068-000

[2] Quantities are shown in dt unless otherwise indicated.
[3] The CP docket corresponds to applicant's blanket transportation certificate. If an ST docket is shown, 120-day transportation service was reported in it.

16. Trunkline Gas Co.

[Docket No. CP90-1418-000]

May 31, 1990.

Take notice that on May 24, 1990, Trunkline Gas Company (Trunkline) P.O. Box 1642, Houston, Texas 77251-1642, filed in Docket No. CP90-1418-000 a request pursuant to § 157.205 of the Commission's Regulations under the Natural Gas Act (18 CFR 157.205) for authorization to transport natural gas on behalf of Bethlehem Steel Corporation (Bethlehem), under the authorization issued in Docket No. CP88-586-000 pursuant to section 7 of the Natural Gas Act, all as more fully set forth in the request which is on file with the Commission and open to public inspection.

Trunkline would perform the proposed firm transportation service for Bethlehem, pursuant to a firm provisional transportation form of transportation agreement dated April 1, 1990 (contract no. T-PLT-2166). The term of the transportation agreement is from April 1, 1990, and shall remain effective for a term of 4 years from the initial date for service and therafter shall continue in effect until terminated by Trunkline or Bethlehem upon at least 6 months prior notice to the other. Trunkline proposes to transport on a peak day up to 12,921 dt; on an average day up to 12,921 dt; and on an annual basis up to 4,716,165 dt of natural gas for Bethlehem. Trunkline states that it would receive the gas at various firm points of receipt in Texas and various interruptible points of receipt in Illinois, Louisiana, Tennessee, Texas, and from offshore Louisiana and offshore Texas. Trunkline would then transport and redeliver the subject gas, less fuel and unaccounted for line loss, to Panhandle Eastern Pipe Line Company in Douglas County, Illinois. It is alleged the rate to be charged Bethlehem for the proposed transportation service shall be accordance with Trunkline's PT rate schedule. Trunkline avers that construction of facilities would not be required to provide the proposed service.

It is explained that the proposed service is currently being performed pursuant to the 120-day self-implementing provision of § 284.223(a)(1) of the Commission's regulations. Trunkline commenced such self-implementing service on April 1, 1990, as reported in Docket No. ST90-2938-000.

Comment date: July 16, 1990, in accordance with Standard Paragraph G at the end of this notice.

17. Southern Natural Gas Co.

[Docket No. CP90-1402-000]

May 31, 1990.

Take notice that on May 24, 1990, Southern Natural Gas Company (Southern) P.O. Box 2563, Birmingham, Alabama 35202-2563, filed in Docket No. CP90-1420-000 a request pursuant to § 157.205 of the Commission's Regulations under the Natural Gas Act (18 CFR 157.205) for authorization to transport natural gas on behalf of Enjet Natural Gas, Inc. (Enjet), under the authorization issued in Docket No. CP88-316-000 pursuant to Section 7 of the Natural Gas Act, all as more fully set forth in the request which is on file with the Commission and open to public inspection.

Southern would perform the proposed interruptible transportation service for Enjet, a marketer, pursuant to a service agreement dated March 7, 1990 under Southern's Rate Schedule IT (service agreement no. 854060). The term of the transportation agreement is from March 7, 1990, and shall remain in full force and effect for primary term of one month and shall continue and remain in force and effect for successive terms continue and remain in force and effect for successive terms of one month thereafter unless and until cancelled by either party giving five days written notice to the other party prior to the end of the primary term and any monthly extension thereof. Southern proposes to transport on a peak day up to 25,000 MMBtu; on an average day up to 2,133 MMBtu, and on an annual basis up to 775,000 MMbtu of natural gas for Enjet. Southern states that it would receive the gas at various receipt points in offshore Texas, offshore Louisiana, Texas, Louisiana, Mississippi, and Alabama for delivery to various points in Louisiana. It is alleged the rate to be charged Enjet for the proposed transportation shall be in accordance with Southern's IT rate schedule, including any penalty charges. Southern avers that concstruction of facilities would not be required to provide the proposed service.

It is explained that the proposed service is currently being performed pursuant to the 120-day self implementing provision of § 284.223 (a)(1) of the Commission's regulations. Southern commenced such self-implementing service on March 28, 1990,as reported in docket No. ST90-2722-000.

Comment date: July 16, 1990, in accordance with Standard Paragraph G at the end of this notice.

18. United Gas Pipe Line Co.

[Docket Nos. CP90-1425-000, CP90-1426-000, CP90-1427-000, CP90-1428-000]

May 31, 1990.

Take notice on May 25, 1990, that United Gas Pipe Line Company (United), P.O. Box 1478, Houston, Texas 77251, filed in the referenced dockets prior notice requests pursuant to §§ 157.205 and 284.223 of the Commission's Regulations under the Natural Gas Act for authorization to transport natural gas on behalf of various shippers under the blanket certificate issued in Docket No. CP88-6-000 pursuant to section 7 of the Natural Gas Act, all as more fully set forth in the prior notice requests which are on file with the Commission and open to public inspection.[4]

Information applicable to each transaction, including the identity of the shipper, the type of transportation service, the appropriate transportation rate schedule, the peak day, average day and annual volumes, and the initiation services dates and related docket

[4] These prior notice requests are not consolidated.

numbers of the 120-day transactions under § 284.223 of the Commission's Regulations, has been provided by United and is summarized in the attached appendix.

United states that each of the proposed services would be provided under an executed transportation agreement, and that United would charge the rates and abide by the terms and conditions of the referenced transportation rate schedules.

Comment date: July 16, 1990, in accordance with Standard Paragraph G at the end of this notice.

Docket number (date filed)	Applicant	Shipper	Peak day [2] average annual	Print of receipt	Points of delivery	Start up date (rate schedule)	Related [3] dockets
CP90-1425-000 (5-25-90)	United Gas Pipe Line Company.	Exxon Corp.	103,000 103,000 37,595,000	LA, TX, Offshore LA, MS, Offshore TX.	LA, TX, MS, KY	4-9-90, (ITS)	ST89-2974.
CP90-1426-000 (5-25-90)	United Gas Pipe Line Company.	Gulf South Pipeline Company.	309,000 309,000 112,785,000	TX, LA, MS, Offshore LA.	LA, AL, TX, Offshore TX, MS.	4-27-90, (ITS)	ST90-2973.
CP90-1427-000 (5-25-90)	United Gas Pipe Line Company.	Fina Oil Chemical Company.	20,600 20,600 7,519,000	TX	MS	4-3-90, (ITS)	ST90-2944.
CP90-1428-000 (5-25-90)	United Gas Pipe Line Company.	Laser Marketing Company.	618,000 618,000 225,570,000	System wide	System wide	4-27-90, (ITS)	ST90-2976.

[2] Quantities are shown in dth unless otherwise indicated.
[3] If an ST docket is shown, 120-day transportation was reported in it.

19. Transcontinental Gas Pipe Line Corporation

[Docket No. CP90-1416-000]

May 31, 1990.

Take notice that on May 24, 1990, Transcontinental Gas Pipe Line Corporation (TRANSCO) P.O. Box 1396, Houston, Texas 77251, filed in Docket No., CP90-1416-000 a request pursuant to § 157.205 of the Commission's Regulations under the Natural Gas Act (18 CFR 157.205) for authorization to transport natural gas on behalf of Superior Natural Gas Corp. (Superior), under the authorization issued in Docket No. CP88-328-000 pursuant to Section 7 of the Natural Gas Act, all as more fully set forth in the request which is on file with the Commission and open to public inspection.

Transco would perform the proposed interruptible transportation service for Superior, pursuant to a service agreement dated March 20, 1990 (system contract #000.3931). The term of the transportatioin agreement is from March 20, 1990, and shall remain in force and effect through April 19, 1990, and thereafter until terminated by Transco or Superior upon at least 30 days written notice to the other. Transco proposes to transport on a peak day up to 120,000 dt; on an average day up to 20,000 dt; and on an annual basis up to 43,800,000 dt of natural gas for Superior. Transco states that it would receive the gas at existing receipt points in offshore Louisiana and would deliver the gas at various existing delivery points in onshore Louisiana. It is alleged the rate to be charged Superior for the proposed transportation shall be accordance with Transco's IT rate schedule. Transcol avers that construction of facilities would not be required to provide the proposed service.

It is explained that the proposed service is currently being performed pursuant to the 120-day self implementing provision of § 284.223(a)(1) of the Commission's regulations. Transco commenced such self-implementing service on April 1, 1990, as reported in Docket No. ST90-2845-000.

Comment date: July 16, 1990, in accordance with Standard Paragraph G at the end of this notice.

20. Northern Natural Gas Co., Division of Enron Corp.

[Docket No. CP90-1422-000, Docket No. CP90-1423-000, Docket No. CP90-1424-000]

May 31, 1990.

Take notice that Northern Natural Gas Company, Division of Enron Corp., 1400 Smith Street, P.O. Box 1188, Houston, Texas 77251-1188, (Applicant), filed in the above-referenced dockets prior notice requests pursuant to §§ 157.205 and 284.223 of the Commission's Regulations under the Natural Gas Act for authorization to transport natural gas on behalf of various shippers under its blanket certificate issued in Docket No. CP86-435-000, pursuant to section 7 of the Natural Gas Act, all as more fully set forth in the requests that are on file with the Commission and open to public inspection.[5]

Information applicable to each transaction, including the identity of the shipper, the type of transportation service, the appropriate transportation rate schedule, the peak day, average, day and annual volumes, and the initiation service dates and related ST docket numbers of the 120-day transactions under § 284.223 of the Commission's Regulations, has been provided by Applicant and is summarized in the attached appendix.

Applicant states that each of the proposed services would be provided under an executed transportation agreement, and that Applicant would charge the rates and abide by the terms and conditions of the referenced transportation rate schedules.

Comment date: July 16, 1990, in accordance with Standard Paragraph G at the end of this notice.

[5] These prior notice requests are not consolidated.

Docket Number (date filed)	Shipper name (type)	Peak day average day annual MMBtu	Receipt [2] points	Delivery points	Contract date rate schedule service type	Related docket, start up date
CP90-1422-000 (5-25-90)	Helmerich & Payne, Inc. (producer).	5,000 3,750 1,825,000	KS	TX	4-26-90, FT-1, Firm.	ST90-3030-000, 5-1-90.

Docket Number (date filed)	Shipper name (type)	Peak day average day annual MMBtu	Receipt [2] points	Delivery points	Contract date rate schedule service type	Related docket, start up date
CP90-1423-000 (5-25-90)	VenGas Marketing Company (marketer).	10,000 7,500 3,650,000	OTX, TX	TX	5-1-90, FT-1, Firm	ST90-3027-000, 5-1-90.
CP90-1424-000 (5-25-90)	Conoco, Inc. (producer).	5,000 3,750 1,825,000	TX	TX	4-1-90, FT-1, Firm	ST90-3032-000, 5-1-90.

[2] Offshore Texas is shown as OTX.

21. Natural Gas Pipeline Co. of America

[Docket No. CP90-1410-000]

May 31, 1990.

Take notice that on May 24, 1990, Natural Gas Pipeline Company of America (Natural), 701 East 22nd Street, Lombard, Illinois, 60148 filed in Docket No. CP90-1410-000 a request pursuant to §§ 157.205 and 284.223 of the Commission's Regulations under the Natural Gas Act (18 CFR 157.205) and the Natural Gas Policy Act (18 CFR 284.223) for authorization to transport natural gas for Texarkoma Transportation Company (Texarkoma), a marketer of natural gas, under Natural's blanket certificate issued in Docket No. CP86-582-000 pursuant to section 7 of the Natural Gas Act, all as more fully set forth in the request which is on file with the commission and open to public inspection.

Natural proposes to transport on a firm basis up to 3,500 MMBtu of natural gas equivalent per day, plus any additional volumes accepted pursuant to the overrun provision of Natural's Rate Schedule FTS, on behalf of Texarkoma pursuant to a gas transportation agreement dated December 15, 1989, as amended on March 22, 1990, between Natural and Texarkoma. Natural would receive the gas at various existing points of receipt on its system in Texas and Oklahoma and redeliver equivalent volumes, less fuel and lost and unaccounted for volumes, at various existing delivery points in Illinois and Iowa.

Natural further states that the estimated average daily and annual quantities would be 3,500 MMBtu and 1,277,500 MMBtu, respectively. Service under § 284.223(a) commenced on April 1, 1990, as reported in Docket No. ST90-3161-000, it is stated.

Comment date: July 16, 1990, in accordance with Standard Paragraph G at the end of this notice.

Standard Paragraphs

F. Any person desiring to be heard or make any protest with reference to said filing should on or before the comment date file with the Federal Energy Regulatory Commission, 825 North Capitol Street, NE., Washington, DC 20426, a motion to intervene or a protest in accordance with the requirements of the Commission's Rules of Practice and Procedure (18 CFR 385.211 and 385.214) and the Regulations under the Natural Gas Act (18 CFR 157.10). All protests filed with the Commission will be considered by it in determining the appropriate action to be taken but will not serve to make the protestants parties to the proceeding. Any person wishing to become a party to a proceeding or to participate as a party in any hearing therein must file a motion to intervene in accordance with the Commission's Rules.

Take further notice that, pursuant to the authority contained in and subject to jurisdiction conferred upon the Federal Energy Regulatory Commission by sections 7 and 15 of the Natural Gas Act and the Commission's Rule of Practice and Procedure, a hearing will be held without further notice before the Commission or its designee on this filing if no motion to intervene is filed within the time required herein, if the Commission on its own review of the matter finds that a grant of the certificate is required by the public convenience and necessity. If a motion for leave to intervene is timely filed, or if the Commission on its own motion believes that a formal hearing is required, further notice of such hearing will be duly given.

Under the procedure herein provided for, unless otherwise advised, it will be unnecessary for the applicant to appear or be represented at the hearing.

G. Any person or the Commission's staff may, within 45 days after the issuance of the instant notice by the Commission, file pursuant to Rule 214 of the Commission's Procedural Rules (18 CFR 385.214) a motion to intervene or notice of intervention and pursuant to § 157.205 of the Regulations under the Natural Gas Act (18 CFR 157.205) a protest to the request. If no protest is filed within the time allowed therefore, the proposed activity shall be deemed to be authorized effective the day after the time allowed for filing a protest. If a protest is filed and not withdrawn within 30 days after the time allowed for filing a protest, the instant request shall be treated as an application for authorization pursuant to section 7 of the Natural Gas Act.

J. Any person desiring to be heard or make any protest with reference to said filings should on or before the comment date file with the Federal Energy Regulatory Commission, 825 North Capitol Street, NE., Washington, DC 20426 a motion to intervene or a protest in accordance with the requirements of the Commission's Rules of Practice and Procedure (18 CFR 385.211, .214). All protests filed with the Commission will be considered by it in determining the appropriate action to be taken but will not serve to make the protestants parties to the proceeding. Any person wishing to become a party in any proceeding herein must file a petition to intervene in accordance with the Commission's rules.

Under the procedure herein provided for, unless otherwise advised, it will be unnecessary for the applicant to appear or be represented at the hearing.

Lois D. Cashell,

Secretary.

[FR Doc. 90-13130 Filed 6-6-90; 8:45 am]

BILLING CODE 6717-01-M

[Docket No. TM90-10-21-000]

Columbia Gas Transmission Corp.; Proposed Changes in FERC Gas Tariff

May 31, 1990.

Take notice that Columbia Gas Transmission Corporation (Columbia) on May 25, 1990, tendered for filing the following proposed changes to its FERC Gas Tariff, First Revised Volume No. 1, to be effective June 1, 1990:

Second Revised Sheet Nos. 30A1 through 30A5
Second Revised Sheet Nos. 30B1 through 30B5
Second Revised Sheet Nos. 30C1 through 30C5
Second Revised Sheet Nos. 30D1 through 30D5
Second Revised Sheet Nos. 30E1 through 30E5
Second Revised Sheet Nos. 30F1 through 30F5
Second Revised Sheet Nos. 30G1 through 30G5

Columbia states that the foregoing tariff sheets modify and supplement Columbia's previous filings in Docket Nos. RP88-187, *et al.*, in which Columbia established procedures pursuant to Order No. 500 to recover from its customers the take-or-pay and contract reformation costs billed to Columbia by its pipeline suppliers. Specifically, Columbia proposes to supplement and modify its earlier filings in Docket Nos. RP88-187, *et al.*, to permit it to flow through revised take-or-pay and contract reformation costs from:

(1) Texas Eastern Transmission Corporation (Texas Eastern) pursuant to filings made on (i) February 28, 1990, which was accepted by Commission order issued on March 30, 1990 in Docket No. TM90-5-17; (ii) March 29, 1990, which was accepted by Commission order issued on April 27, 1990 in Docket No. RP90-96, and (iii) April 9, 1990, which was accepted by Commission order issued May 9, 1990, in Docket No. TM90-7-17;

(2) Texas Gas Transmission Corporation (Texas Gas) pursuant to a filing made on April 16, 1990, which was accepted by Commission order issued May 16, 1990, in Docket No. TM90-4-18;

(3) Tennessee Gas Pipeline Company (Tennessee) pursuant to a filing made on January 16, 1990, which was accepted by Commission order dated March 8, 1990 in Docket Nos. RP88-191 and RP90-48; and

(4) Transcontinental Gas Pipe Line Company (Transco) pursuant to a filing made on March 30, 1990, which was accepted by Commission order issued on April 27, 1990 in Docket No. RP90-99.

Columbia states that copies of the filing were served upon Columbia's jurisdictional customers, interested state commissions, and upon each person designated on the official service list compiled by the Commission's Secretary in Docket Nos. RP88-187, RP89-181, RP89-214, RP89-229, TM89-3-21, TM89-4-21, TM89-5-21, TM89-7-21, RP90-26, TM90-2-21, TM90-5-21, TM90-6-21, TM90-7-21, and TM90-8-21.

Any person desiring to protest said filing should file a protest with the Federal Energy Regulatory Commission, 825 North Capitol Street, NE., Washington, DC 20426, in accordance with Rules 214 and 211 of the Commission's Rules of Practice and Procedure (18 CFR 385.214, 385.211 (1989). All such protests should be filed on or before June 7, 1990. Protests will be considered by the Commission in determining the appropriate action to be taken, but will not serve to make protestants parties to the proceeding. Persons that are already parties to this proceeding need not file a motion to intervene in this matter. Copies of this filing are on file with the Commission and are available for public inspection.

Lois D. Cashell,

Secretary.

[FR Doc. 90-13131 Filed 6-6-90; 8:45 am]

BILLING CODE 6717-01-M

[Docket No. RP87-22-009]

High Island Offshore System; Filing of Pipeline Refund Report

May 31, 1990.

Take notice that High Island Offshore System submitted to the Commission for filing a proposed refund report.

Any person wishing to do so may submit comments in writing concerning the subject refund report. All such comments should be filed with or mailed to the Federal Energy Regulatory Commission, 825 North Capitol Street, NE., Washington, DC 20426, on or before June 21, 1990. Copies of the respective filings are on file with the Commission and available for public inspection.

Lois D. Cashell,

Secretary.

[FR Doc. 90-13132 Filed 6-6-90; 8:45 am]

BILLING CODE 6717-01-M

[Docket No. RP90-118-000]

Northwest Pipeline Corp.; Proposed Change in FERC Gas Tariff

May 31, 1990.

Take notice that on May 29, 1990, Northwest Pipeline Corporation ("Northwest") tendered for filing and acceptance the following tariff sheets:

First Revised Volume No. 1

Sixty-Sixth Revised Sheet No. 10
First Revised Sheet No. 10.1
Thirty-Eighth Revised Sheet No. 10-A
Sixth Revised Sheet No. 12

Original Volume No. 1-A

Twenty-Seventh Revised Sheet No. 201

Original Volume No. 2

Fifteenth Revised Sheet No. 2.3

Northwest states that the purpose of this filing is to update its Commodity SSP Charge and Fixed Monthly SSP Charge, effective July 1, 1990, to (1) reflect interest applicable to April, May and June 1990, (2) the amortization of principal and interest for the months of January, February and March 1990, and (3) to reflect the inclusion of additional SSP Costs that have occurred since Northwest's last quarterly filing. The proposed revised Commodity SSP Charge is 4.06 cents per MMBtu.

Northwest states that a copy of this filing has been sent to all parties of record in Docket No. RP89-137 and to all jurisdictional customers and affected state regulatory commissions.

Any person desiring to be heard or protest said filing should file a motion to intervene or protest with the Federal Energy Regulatory Commission, 825 North Capitol Street, NE., Washington, DC 20426, in accordance with §§ 385.214 and 385.211 of the Commission's Rules of Practice and Procedure. All such motions or protests should be filed on or before June 7, 1990. Protests will be considered by the Commission in determining the appropriate action to be taken, but will not serve to make protestants parties to the proceeding. Any person wishing to become a party must file a motion to intervene. Copies of this filing are on file with the Commission and are available for public inspection in the Public Reference Room.

Lois D. Cashell,

Secretary.

[FR Doc. 90-13133 Filed 6-6-90; 8:45 am]

BILLING CODE 6717-01-M

[Docket Nos. 87-62-004]

Pacific Gas Transmission Co., Compliance Filing

May 31, 1990.

Take notice that on May 29, 1990, Pacific Gas Transmission Company (PGT) tendered for filing and acceptance cetain tariff sheets to be included in its First Revised Volume No. 1, Original Volume No. 1-A and new Substitute First Revised Volume No. 1 of its FERC Gas Tariff.

The above tariff sheets have been revised to reflect the Settlement of PGT's 1987 General Rate Case in Docket Nos. RP87-62-000 and RP86-148-000, as modified by the Commission's orders issued on January 24, 1990 and April 27, 1990.

These tariff sheets will implement the Settlement rates, provide for the application of a Purchased Gas Cost Adjustment Clause and provide the basis for refunds which will be made to customers for the refund period.

PGT requests all waivers that may be necessary to implement the prospective portion of the rates effective August 1, 1990.

Any person desiring to be heard or to protest said filing should file a motion to intervene or protest with the Federal Energy Regulatory Commission, 825 North Capitol Street, NE., Washington DC 20426, in accordance with § 385.214 and 385.211 of the Commission's Rules of Practice and Procedure. All such

motions or protests should be filed on or before June 7, 1990. Protests will be considered by the Commission in determining the appropriate action to be taken, but will not serve to make protestants parties to the proceeding. Any person wishing to become a party must file a motion to intervene. Persons that are already parties to this proceeding need not file a motion to intervene in this matter. Copies of this filing are on file with the Commission and are available for public inspection in the Public Reference Room.

Lois D. Cashell,

Secretary.

[FR Doc. 90-13134 Filed 6-6-90; 8:45 am]

BILLING CODE 6717-01-M

[Docket No. GT90-29-000]

Panhandle Eastern Pipe Line Corp.; Proposed Changes in Service Agreements

May 31, 1990.

Take notice that on May 15, 1990, Panhandle Eastern Pipe Line Corporation (Panhandle) tendered for filing and acceptance new Service Agreements under Rate Schedule G-1, dated February 9, 1990, between Panhandle and Kokomo Gas and Fuel Company (Kokomo) and April 1, 1990, between Panhandle and Northern Indiana Fuel and Light Company.

The above-mentioned Service Agreements reflect Panhandle's customers' request to convert firm sales contract demand to firm transportation contract demand, pursuant to § 284.10(c)(3) of the Commission's regulations.

Panhandle requests effective dates of January 1 and April 1, 1990, respectively. Panhandle's reduction of Kokomo's Rate Schedule G-1, from an annual firm sales of 11,738,790 Mcf to 8,348,850 Mcf due to a conversion of sales service to firm transportation service requires a request for abandonment under section 7(b) of the Natural Gas Act because the proposed effective date for the reduction in service to Kokomo precedes the January 22, 1990 effective date of Order No. 500-H, which provides for pre-granted abandonment of sales volumes converted to transportation (§ 284.10(d)). However, the Commission will construe Panhandle's request for an effective date of January 1, 1990, as an application under Section 7(b) for partial abandonment of Panhandle's sales service to Kokomo.

Panhandle states that a copy of this filing has been mailed to the parties listed above.

Any person desiring to be heard or protest said filing should file a motion to intervene or protest with the Federal Energy Regulatory Commission, 825 North Capitol Street, NE., Washington, DC 20426, in accordance with Rules 214 and 211 of the Commission's Rules of Practice and Procedure (18 CFR 385.214, 385.211 (1989)). All such motions or protests should be filed on or before June 7, 1990. Protests will be considered by the Commission in determining the appropriate action to be taken, but will not serve to make protestants parties to the proceeding. Any person wishing to become a party must file a motion to intervene. Copies of this filing are on file with the Commission and are available for public inspection.

Lois D. Cashell,

Secretary.

[FR Doc. 90-13135 Filed 6-6-90; 8:45 am]

BILLING CODE 6717-01-M

[Docket Nos. CP90-1328-000, CP90-1329-000, CP90-1330-000, CP90-1331-000, CP90-1332-000, CP90-1333-000, and CP90-1334-000]

United Gas Pipe Line Co.; Further Notice of Request Under Blanket Authorization

May 29, 1990.

By supplement dated May 22, 1990, United Gas Pipe Line Company states that in Docket No. CP90-1329-000, it inadvertently failed to report the volumes reflecting the increase in Maximum Daily Quantity as reported in Amendment No. 1 filed with the Commission on September 26, 1988, in Docket No. ST88-5829. A corrected appendix is attached herein.

Lois D. Cashell,

Secretary.

Docket No. (date filed)	Applicant	Shipper name	Peak day [1] avg, annual	Points of— Receipt	Points of— Delivery	Start-up date, rate schedule	Related [2] dockets
CP90-1328-000 (5-9-90)	United Gas Pipe Line Company, P.O. Box 1478, Houston, Texas 77251-1478.	Texaco Gas Marketing	103,000 103,000 37,595,000	LA, Off LA, TX, MS, Off TX	LA, TX, FL, AL, MS	3-26-90 ITS	CP88-6-000 ST90-2620-000
CP90-1329-000 (5-9-90)	United Gas Pipe Line Company, P.O. Box 1478, Houston, Texas 77251-1478.	Texaco Gas Marketing	206,000 206,000 75,190,000	LA, Off LA, MS, AL	LA, MS, AL, FL	3-26-90 ITS	CP88-6-000 ST90-2618-000
CP90-1330-000 (5-9-90)	United Gas Pipe Line Company, P.O. Box 1478, Houston, Texas 77251-1478.	Texaco Gas Marketing	103,000 103,000 37,595,000	LA, Off LA, TX, MS	LA, TX, MS	3-26-90 ITS	CP88-6-000 ST90-2623-000
CP90-1331-000 (5-9-90)	United Gas Pipe Line Company, P.O. Box 1478, Houston, Texas 77251-1478.	Texaco Gas Marketing	41,200 41,200 15,038,000	TX, LA, Off LA,	LA, TX, MS	3-26-90 ITS	CP88-6-000 ST90-2712-000
CP90-1332-000 (5-9-90)	United Gas Pipe Line Company, P.O. Box 1478, Houston, Texas 77251-1478.	Texaco Gas Marketing	360,500 360,500 131,582,500	TX, LA, Off LA, MS	LA, MS, TX	3-26-90 ITS	CP88-6-000 ST90-2622-000
CP90-1333-000 (5-9-90)	United Gas Pipe Line Company, P.O. Box 1478, Houston, Texas 77251-1478.	Texaco Gas Marketing	103,000 103,000 37,595,000	LA, MS	LA	3-26-90 ITS	CP88-6-000 ST90-2595-000
CP90-1334-000 (5-9-90)	United Gas Pipe Line Company, P.O. Box 1478, Houston, Texas 77251-1478.	Mobile Natural Gas, Inc	51,500 51,500 18,797,500	LA, Off LA	LA, MS, AL	3-27-90 ITS	CP88-6-000 ST90-2621-000

[1] Quantities are shown in MMBtu unless otherwise indicated.
[2] The CP docket corresponds to applicant's blanket transportation certificate. If an ST docket is shown, 120-day transportation service was reported in it.

[FR Doc. 90-13136 Filed 6-6-90; 8:45 am]

BILLING CODE 6717-01-M

Office of Fossil Energy

[FE Docket No. 90-31-NG]

Union Gas Limited; Application for Blanket Authorization to Import and Export Natural Gas and Liquefied Natural Gas

AGENCY: Office of Fossil Energy, Department of Energy.

ACTION: Notice of application for blanket authorization to import and export natural gas to Canada and liquefied natural gas.

SUMMARY: The Office of Fossil Energy (FE) of the Department of Energy (DOE) gives notice of receipt on April 20, 1990, of an application filed by Union Gas Limited (Union) for blanket authorization to import up to 100 Bcf of natural gas from Canada and to export up to 100 Bcf of natural gas to Canada. While Union anticipates that the majority of the imports would come from Canada, they also request authorization to import natural gas from countries other than Canada, should the opportunity arise. The application requests that the import/export authority be approved for spot and short-term sales for a two-year period commencing on the date of first delivery. Union expects to utilize existing pipeline and LNG facilities for the processing and transportation of the volumes to be imported and exported, and states it will submit quarterly reports detailing each transaction.

The application is filed under section 3 of the Natural Gas Act and DOE Delegation Order Nos. 0204-111 and 0204-127. Protests, motions to intervene, notices of intervention and written comments are invited.

DATES: Protests, motions to intervene or notices of intervention, as applicable, requests for additional procedures and written comments are to be filed at the address listed below no later than 4:30 p.m., e.d.t., July 9, 1990.

ADDRESSES: Office of Fuels Programs, Fossil Energy, U.S. Department of Energy, Forrestal Building, Room 3F-056, FE-50, 1000 Independence Avenue, SW., Washington, DC 20585.

FOR FURTHER INFORMATION CONTACT:

Perry Bolger, Office of Fuels Programs, Fossil Energy, U.S. Department of Energy, Forrestal Building, Room 3H-056, 1000 Independence Avenue, SW., Washington, DC 20585, (202) 586-1789.

Michael T. Skinker, Natural Gas and Mineral Leasing, Office of General Counsel, U.S. Department of Energy, Forrestal Building, Room 6E-042, 1000 Independence Avenue, SW., Washington, DC 20585, (202) 586-6667.

SUPPLEMENTARY INFORMATION: The exact legal name of the applicant is Union Gas Limited, a Canadian corporation with its principal place of business in Chatam, Ontario, Canada. Union is a local gas distribution company, engaged in the transmission, storage, and distribution of gas. The company intends to import and/or export gas on its own behalf or as an agent on behalf of other parties.

Union requests blanket authorization to export up to 100 Bcf of natural gas to Canada over a term of two years commencing on the date of first delivery. The individual short-term and spot sales would be freely negotiated, with market conditions determining the price and other terms of these transactions. Union asserts that under its proposal the gas to be exported would be incremental to the needs of current purchasers, would benefit producers and would generate tax and related revenues in the producing state from which the exports would be drawn. Union adds that such sales of gas for export would help the U.S. balance of trade.

Union also requests blanket authorization to import for export an additional 100 Bcf of Canadian natural gas over a term of two years commencing on the date of first delivery. Union states that the gas would not be imported for ultimate consumption in the United States, rather that all of the imported gas except for any volumes used for transportation under the proposed authorization would be reexported back into Canada for ultimate Canadian consumption. The terms of short-term and spot sales are expected to be competitive under Canadian market conditions. The company requests that if its application is approved, it be permitted to import and/or export natural gas at any point on the international border where existing facilities are located.

All parties should be aware that, while Union expects that most, if not all, of its transactions will be consummated wholly in gaseous form, Union requests authority for imports of gas in both gaseous and liquid form. Union requests that authorization be granted on an expedited basis.

Since no sale of the imported gas in the U.S. contemplated, the decision on the application for import for export authority will be made consistent with the DOE's evaluation of the impact of the proposal on the deliverability capacity of the transporting pipeline system. In reviewing natural gas export applications, the domestic need for the gas to be exported is considered, and any other issues determined to be appropriate in a particular case, including whether the arrangement is consistent with the DOE policy of promoting competition in the natural gas marketplace by allowing commercial parties to freely negotiate their own trade arrangements. Parties, especially those that may oppose this application, should comment in their responses on these matters as they relate to the requested import and export authority. The applicant asserts that this import/export arrangement would be competitive, would provide new markets for the domestic gas to be exported and therefore is in the public interest. Parties opposing this arrangement bear the burden of overcoming this assertion.

NEPA Compliance

The National Environmental Policy Act (NEPA), (42 U.S.C. 4321 *et seq.*) requires the DOE to give appropriate consideration to the environmental effects of its proposed actions. No final decision will be issued in this proceeding until the DOE has met its NEPA responsibilities.

Public Comment Procedures

In response to this notice, any person may file a protest, motion to intervene or notice of intervention, as applicable, and written comments. Any person wishing to become a party to the proceeding and to have the written comments considered as the basis for any decision on the application must, however, file a motion to intervene or notice of intervention, as applicable. The filing of a protest with respect to this application will not serve to make the protestant a party to the proceeding, although protests and comments received from persons who are not parties will be considered in determining the appropriate action to be taken on the application. All protests, motions to intervene, notices of intervention, and written comments must meet the requirements that are specified by the regulations in 10 CFR part 590.

Protests, motions to intervene, notices or intervention, requests for additional procedures, and written comments should be filed with the Office of Fuels Programs at the above address.

It is intended that a decisional record on the application will be developed through responses to this notice by parties, including the parties' written comments and replies thereto.

Additional procedures will be used as necessary to achieve a complete understanding of the facts and issues. A party seeking intervention may request that additional procedures be provided, such as additional written comments, an oral presentation, a conference, or trial-type hearing. Any request to file additional written comments should explain why they are necessary. Any request for an oral presentation should identify the substantial question of fact, law or policy at issue, show that it is material and relevant to a decision in the proceeding, and demonstrate why an oral presentation is needed. Any request for a conference should demonstrate why the conference would materially advance the proceeding. Any request for a trial-type hearing must show that there are factual issues genuinely in dispute that are relevant and material to a decision and that a trail-type hearing is necessary for a full and true disclosure of the facts.

If an additional procedure is scheduled, a notice will be provided to all parties. If not party requests additional procedures, a final opinion and order may be issued based on the official record, including the application and responses filed by parties pursuant to this notice, in accordance with 10 CFR 590.316.

A copy of Union's application is available for inspection and copying in the Office of Fuels Programs Docket Room, 3F-056, at the above address. The docket room is open between the hours of 8 a.m. and 4:30 p.m., Monday through Friday, except Federal holidays.

Issued in Washington, DC, on June 1, 1990.

Clifford P. Tomaszewski,

Acting Deputy Assistant Secretary for Fuels Programs Office of Fossil Energy

[FR Doc. 90-13249 Filed 6-6-90; 8:45am]

BILLING CODE 6450-01-M

FEDERAL COMMUNICATIONS COMMISSION

[General Docket 82-243]

Service and Technical Rules for Government and Non-Government Fixed Service Usage of the Frequency Bands 932-935 MHz and 941-944 MHz

AGENCY: Federal Communications Commission.

ACTION: Public notice.

SUMMARY: This action solicits applications and summarizes filing procedures for the Government/Non-Government Fixed Service at 932-935/941-944 MHz. The action follows the Commission's Memorandum Opinion and Order in this proceeding (55 FR 10461, March 21, 1990) that finalized rules for the new Fixed Service.

DATES: The initial application filing period begins July 9, 1990 and ends July 13, 1990.

ADDRESSES: See attached Public Notice.

FOR FURTHER INFORMATION CONTACT: Rodney Small, telephone (202) 653-8116.

SUPPLEMENTARY INFORMATION:

Filing Window for 900 MHz Government/Non-Government Fixed Service

[General Docket No. 82-243]

In the *Memorandum Opinion and Order* in General Docket No. 82-243, released March 15, 1990, the Commission clarified technical and service rules for the Government/Non-Government Fixed Service at 932-935/941-944 MHz and indicated that it would soon entertain applications for the new channels. A list of available channels is attached as Appendix A to this public notice. The public notice summarizes the application filing process for the new service and establishes the initial application filing period. Subject to the requirements set forth below, applications for this service must be filed during the one-week period beginning July 9, 1990, and ending July 13, 1990. Except as indicated below, applications received at the official filing locations listed below before the start of business on July 9 or after the close of business on July 13 will be dismissed as untimely filed.

Government applications will be filed with the National Telecommunications and Information Administration (NTIA). The filing requirements for Non-Government applications will vary depending upon the nature of the facilities requested as described below.

Common carrier applications for the 932-932.5/941-941.5 MHz bands must be filed on FCC Form 401 and must comply with all pertient standards of part 22 of the Commission's Rules. Applications requiring a fee must be accompanied by FCC Form 155 and the filing fee of $230 per application (Fee Type Code CMD), and should be submitted to: Federal Communications Commission, Common Carrier Land Mobile, P.O. Box 358130, Pittsburgh, PA 15251-5130. Applications not requiring a fee (See § 1.1112 of the Commission's Rules, 47 CFR 1.1112) should be submitted to: Federal Communications Commission, Washington, DC 20554.

Common carrier applications for the 932-935/941.5-944 MHz bands must be filed on FCC Form 494 and must comply with all pertinent standards of part 21 of the Commission's Rules. Applications requiring a fee must be accompanied by FCC Form 155 and the filing fee of $155 per application (Fee Type Code CJP), and should be submitted to: Federal Communications Commission, Common Carrier Domestic Radio, P.O. Box 358155, Pittsburgh, PA 15251-5155. Applications not requiring a fee (See again § 1.1112 of the Commission's Rules) should be submitted to: Federal Communications Commission, Washington, DC 20554.

Private radio applications must be filed on FCC Form 402 and must comply with all pertinent standards of parts 1 and 94 of the Commission's Rules. Applications requiring a fee must be accompanied by FCC Form 155 and the filing fee of $155 per application (Fee Type Code PEO), and should be submitted to: Federal Communications Commission, Microwave Service, P.O. Box 358250, Pittsburgh, PA 15251-5250. Applications not requiring a fee (See again § 1.1112 of the Commission's Rules) should be submitted to: Federal Communications Commission, Gettysburg, PA 17326.

Failure to observe the above filing requirements will result in dismissal of the application(s).

During the initial filing period, applicants for the 932-932.5/941-941.5 MHz bands may specify a channel preference, but the Commission will treat all channels in these bands as fungible and, together with the NTIA, will assign all channels. Applicants for channels in these bands may apply for either a single channel or a paired channel. Requests for a single channel in these bans will be considered to be for a lower power 932 MHz channel whenever all planned remote stations are located within 48 kilometers of the master/control station. A single channel applicant that does not plan to communicate with remotes farther than this distance but that requires a higher power 941 MHz channel must submit a showing with its application to support its request.

Applications for the 932-932.5/941-941.5 MHz bands that are found acceptable for filing will be assigned a number. A random drawing of the assigned numbers will be conducted in order to rank these applications. To the extent that there are channels available, the applications will subsequently be assigned channels in rank order. To the extent possible, each applicant will be assigned its channel preference. When this is not possible, or if no channel preference is listed, the lowest available channel will be assigned. If it is not possible to assign a channel because of

prior assignments to higher ranked applicants, then the application will be set aside to be dismissed. This process will continue until all applications have either been assigned a channel or set aside to be dismissed.

Applicants for the 932.5–935/941.5–944 MHz bands must specify their intended ferquencies of operation. Applicants in this band for one-way single channel use will be considered only if accompanied by a showing that unpaired spectrum is not available in other bands and that single channel use of these bands will not impair spectrum efficiency. Applicants for the 932.5035/941.5–944 MHz bands who select a channel that may affect grandfathered broadcast auxiliary stations at 942–944 MHz must also submit evidence that frequency coordination has been performed in accordance with § 21.100(d) of the Commission's Rules with all potentially affected users. The grandfathered broadcast auxiliary stations may modify their facilities provded that they submit evidence of frequency coordination in accordance with § 21.100(d) of the Commission's Rules and provided that they do not preclude the use of any authorized or pending point-to-point applications.[1] A list of these broadcast auxiliary stations and their locations is attached as appendix B to this public notice.

In the 932.5–935/941.5–944 MHz bands, since applicants will be applying for specific channels, applications that have not been dismissed or otherwise found unacceptable will be sorted by channel selection, and applications for channels that are not mutually exclusive with any other pending application will be processed and assigned the requested channel pair. In the event that two or more applications are found to be mutually exclusive, a public notice will be issued listing the applications and any available channels; applicants will have an opportunity to resolve the mutual exclusivity by amending their applications, despite the closed window for the filing of applications in these bands. These modified applications will be required to contain the requisite engineering analysis with regard to potential interference to previously authorized facilities and pending applications. If mututally exclusive applications remain after this process is concluded, a lottery will be conducted for each channel among all remaining mutually exclusive applicants.

Applications for channels in the 932–935/941–944 MHz bands, including Government applications filed with the NTIA, will be listed on a Commission public notice as soon as feasible after the filing window closes. Petitions to deny filed against any of these applications must be in accordance with either § 1.962(g), § 21.20, or § 22.30 of the Commission's Rules, whichever is applicable.

After this assignment process has concluded, the Commission will issue a list of all applications that have been granted. At that time, we will also establish the date after which new applications can be filed for any remaining channels in the 932–935/941–944 MHz bands.

Federal Communications Commission.

William F. Caton,

Acting Secretary.

[1] In accordance with footnote US302 to the Table of Frequency Allocations, broadcast auxiliary station applicants in Puerto Rico may apply for channels in the 942–944 MHz band and broadcast auxiliary station licensees in Puerto Rico may modify existing facilities in the 942–944 MHz band subject to § 21.100(d) frequency coordination with other applicants for those channels. See § 2.106 of the Commission's Rules. 47 CFR 2.106.

APPENDIX A.—12.5 KHZ POINT-TO-MULTIPOINT CHANNELS

Transmit (or receive) frequency (MHz)	Receive (or transmit) frequency (MHz)
932.00625	941.00625
.01875	.01875
.03125	.03125
.04375	.04375
.05625	.05625
.06875	.06875
.08125	.08125
.09375	.09375
.10625	.10625
.11875	.11875
.13125	.13125
.14375	.14375
.15625	.15625
.16875	.16875
.18125	.18125
.19375	.19375
.20625	.20625
.21875	.21875
.23125	.23125
.24375	.24375
.25625	.25625
.26875	.26875
.28125	.28125
.29375	.29375
.30625	.30625
.31875	.31875
.33125	.33125
.34375	.34375
.35625	.35625
.36875	.36875
.38125	.38125
.39375	.39375
.40625	.40625
.41875	.41875
.43125	.43125
.44375	.44375
.45625	.45625
.46875	.46875
.48125	.48125
.49375	.49375

25 kHz Point-to-Point Channels

Transmit (or receive)	Receive (or transmit)
Frequency (MHz)	Frequency (MHz)
932.5125	941.5125
.5375	.5375
.5625	.5625
.5875	.5875
.6125	.6125
.6375	.6375
.6625	.6625
934.8375	943.8375
.8625	.8625
.8875	.8875
.9125	.9125
.9375	.9375
.9625	.9625
.9875	.9875

50 kHz Point-to-Point Channels

Transmit (or receive)	Receive (or transmit)
Frequency (MHz)	Frequency (MHz)
932.7000	941.7000
.7500	.7500
934.8000	943.8000

100 kHz Point-to-Point Channels

Transmit (or receive)	Receive (or transmit)
Frequency (MHz)	Frequency (MHz)
932.8250	941.8250
.9250	.9250
933.0250	942.0250
934.5250	943.5250
.6250	.6250
.7250	.7250

200 kHz Point-to-Point Channels

Transmit (or receive)	Receive (or transmit)
Frequency (MHz)	Frequency (MHz)
933.1750	942.1750
.3750	.3750
.5750	.5750
.7750	.7750
.9750	.9750
934.1750	943.1750
.3750	.3750

APPENDIX B.—BROADCAST AUXILIARY SERVICE LICENSEES AT 942–944 MHZ

Location	Frequency (MHz)	Callsign	Licensee
Alabama Mobile	944.000	KHH29	Trio Broadcasting Inc.
Alaska North Kenai.	944.250	WLO469	Pickle Hill Public B/C Inc.

APPENDIX B.—BROADCAST AUXILIARY SERVICE LICENSEES AT 942-944 MHz—Continued

Location	Frequency (MHz)	Callsign	Licensee
California			
Eureka	942.375	KGA29	Merit B/C Corp.
	942.625	KGA29	Merit B/C Corp.
Fresno	943.000	KWU28	East West FM Group Inc.
Hatchet Mt.	942.500	WDD21	Hermiston Broadcasting Co.
Los Angeles.	942.875	KNU22	Classic Comm. of LA LTD
	943.125	KNU22	Classic Comm. of LA LTD
	943.375	KVG27	KFI, Inc.
	943.625	KVG27	KFI, Inc.
	943.375	WBS271	KFI, Inc.
	943.625	WBS371	KFI, Inc.
	943.875	WCX527	H & G Comm. of California
	944.125	WCX527	H & G Comm. of California
	943.000	WHY647	Classic Comm. of LA LTD
	942.500	WJG86	Eleven-Fifty. Corp.
Modesto	944.000	KUZ 53	KOSO INC TR/AS KOSO B/C
Mountain View.	942.475	KIP46	Los Altos B/C Inc.
	942.625	KIP46	Los Altos B/C Inc.
Pittsburg	943.500	KMA91	Diamond B/C of Calif., Inc.
Sacramento.	944.000	KNL38	Family Stations Inc.
San Diego.	943.500	WHB306	Southern Nevada Radio, Inc.
San Francisco.	944.125	KR5559	Bonneville Holding Co.
	944.000	WLL777	Pacific FM Inc.
Santa Barbara.	943.400	KMS61	Schuele Organization Inc.
	943.650	KMS61	Schuele Organization Inc.
Stockton	943.000	KMQ87	Anchor Media TV Inc.
	942.500	KNH28	Valley Broadcasters Inc.
Colorado			
Boulder	944.000	WGZ697	Boulder Valley B/C Inc.
Connecticut			
Fairfield	943.500	WAL22	Sacred Heart Univ.Inc.
Florida			
Key West	943.000	KOA34	Family Radio LTD
Miami Beach.	944.000	WLD501	Howard B/C Corp.
Panama City.	943.000	KNZ61	Communications SVCS B/C Inc.
Punta Gorda.	944.000	WLO021	University of South Florida
Tampa	944.000	KIX39	Tampa Television Inc.
Georgia			
Atlanta	942.500	KRY36	Great American TV & Radio
Columbus	943.500	KIN24	Columbus Bcstg Co Inc.
Manchester.	943.850	KVR58	WFDR Inc.
	944.150	KVR58	WFDR Inc.
Idaho			
Teakean Butte.	943.000	KZV50	4-K Radio Inc.
Illinois			
Chicago	943.500	KSA37	The Moody Bible Inst.
Edwardsville.	944.225	WLL450	Horizon B/C Corp.
	944.225	WLL490	Horizon B/C Corp.
Pekin	944.250	WLO530	Central Ill. Radio
Indiana			
South Bend.	943.875	KDI40	WSBT, Inc.
Iowa			
Dubuque	942.375	KVV20	Telegraph-Herald Inc.
	942.625	KVV20	Telegraph-Herald Inc.
Mount Pleasant.	944.000	WLL623	KILJ Inc.
Waterloo	943.000	KA064	KXEL B/C Co. Inc.
Kansas			
Wichita	942.375	KVW20	Yellow Stone Brick Radio
	942.625	KVW20	Yellow Stone Brick Radio
	943.000	KMV35	Aberdeen Comm. Inc.
Kentucky			
Paducah	943.500	KWV68	WDXR, Inc.
Louisiana			
Alexandria.	944.000	KTB93	Alexandria B/C Co Inc.
Shreveport.	942.500	KRU73	Shreveport Great Empire B/C
Maine			
Portland	942.875	KCG45	WHOM Associates
	943.125	KCG45	WHOM Associates
	944.000	KVR53	Guy Gannett B/C Svcs
Maryland			
Cumberland.	943.875	KUZ51	WTBO-WKGO Corp.
Massachusetts			
Springfield.	944.000	KMV31	New England B/C Corp.
Michigan			
Alpena	943.875	WLF231	WHSB, Inc.
	944.125	WLF231	WHSB, Inc.
Minnesota			
Duluth	943.000	KZV51	WDSM/KZIO Inc.
Missouri			
Mansfield	944.000	WLO822	Terry L. Claar
New Mexico			
Roswell	942.875	KUX93	King B/C Co.
	943.125	KUX93	King B/C Co.
Tohatchi	943.500	WLD211	Ramah Navajo School Board
New York			
Albany	943.375	KEH79	WAMC
	943.625	KEH79	WAMC
Buffalo	942.500	KEK67	Western NY Educ. TV Assn
	943.000	KEK64	Western NY Educ. TV Assn
Cornwall	943.000	WBD21	Radio Cornwall
North Carolina			
Raleigh	944.000	KUY78	Capitol B/C Inc.
Washington.	944.000	KGY95	Tar Heel B/C System Corp.
North Dakota			
Williston	942.500	KWE37	KGCX, Inc.
	943.000	KWE38	KGCX, Inc.
Oklahoma			
Poteau	942.875	WAU24	Indian Nation B/C
	943.125	WAU24	Indian Nation B/C
Oregon			
Ashland	943.000	WDF26	Radio Medford Inc.
Corvallis	943.500	KRZ69	State of Oregon
Portland	943.000	ETZ87	Alexander B/C Co.
Pennsylvania			
Erie	943.000	WAA32	Burbach B/C Co.
Meadville	944.000	WLO824	Great Circle B/C Co.
Milton	942.875	KYX72	WMLP, Inc.
	943.125	KYX72	WMLP, Inc.
Scranton	942.375	KYK73	Scranton Times
	942.625	KYK73	Scranton Times
	942.500	KYX73	Scranton Times
Tyrone	942.375	KGK39	Tyrone B/C Co.

APPENDIX B.—BROADCAST AUXILIARY SERVICE LICENSEES AT 942-944 MHz—Continued

Location	Frequency (MHz)	Callsign	Licensee
	942.625	KGK39	Tyrone B/C Co.
	942.875	KGK40	Tyrone B/C Co.
	943.125	KGK40	Tyrone B/C Co.
	943.375	KHD20	Tyrone B/C Co.
	943.625	KHD20	Tyrone B/C Co.
South Carolina			
Spartanburg.	943.875	KJN80	Spartan Radiocasting Co.
	944.000	KJN80	Spartan Radiocasting Co.
	944.125	KJN80	Spartan Radiocasting Co.
Tennessee			
Dyersburg.	943.850	KGB95	Dr. Pepper Pepsi-Cola
	944.150	KGB95	Dr. Pepper Pepsi-Cola
Knoxville	942.500	KTY51	Stoner B/C System Inc.
Texas			
Dallas	944.125	WHJ38	Bonneville Holding Co.
Houston	943.000	KLV57	Gulf Television Corp.
Texarkana.	942.500	KZZ21	KCMC Inc.
Waco	943.500	WAL23	KWTX B/C Co.
Utah			
Salt Lake City.	942.375	KXZ63	KCPX Inc.
	942.625	KXZ63	KCPX Inc.
Virginia			
Bedford	944.000	WLO331	Winfas of Virginia Inc.
Danville	943.500	KEB26	Piedmont B/C Corp.
Salem	942.875	KIK83	Mel Wheeler Inc.
	943.000	KIK83	Mel Wheeler Inc.
	943.125	KIK83	Mel Wheeler Inc.
Washington			
Pasco	942.500	WGY68	Tri-Cities Comm. Inc.
Wisconsin			
Eau Claire.	942.500	KNN20	Central Communications Inc.
Oshkosh	943.850	KVP22	Kimball B/C Inc.
	944.150	KVP22	Kimball B/C Inc.
Puerto Rico			
Cayey	942.500	WLH369	Arso Radio Corp.
Hato Rey	943.000	WLF599	Catholic Apostolic & Roman

APPENDIX B.—BROADCAST AUXILIARY SERVICE LICENSEES AT 942-944 MHz—Continued

Location	Frequency (MHz)	Callsign	Licensee
Isabela	943.875	WLF900	Radio Noroeste B/C Inc.
	944.125	WLF900	Radio Noroeste B/C Inc.
Jayuya	943.000	WAX25	Voice of Puerto Rico Inc.
Mayaguez.	943.875	WLE823	WAEL Inc.
	944.125	WLE823	WAEL Inc.
Morovis	944.000	WLO450	Wifredo G. Blanco Pl
Rincon	942.375	WLF565	Arso Radio Corp.
	942.625	WLF565	Arso Radio Corp.
San Juan	942.500	KCI71	Comm. Counsel Group, Inc.
	944.000	DRU35	Hearst Radio Inc.
	943.000	DUQ50	Radio Americus Corp.
	943.500	WLF715	Ministerio Radial Cristo
Villa Fontan Park.	943.875	WLJ532	Aero B/C Corp.
	944.125	WLJ532	Aero B/C Corp.

[FR Doc. 90-13211 Filed 6-6-80; 8:45 am]

BILLING CODE 6712-01-M

Applications for Consolidated Hearings, Determinations, etc.; Minnesota Christian Broadcasting, Inc., et al.

1. The Commission has before it the following groups of mutually exclusive applications for seven new FM stations:

Applicant, City/State	File No.	MM docket No.
I		
A. Minnesota Christian Broadcasting, Inc.; Nisswa, MN.	BPH-880609MI	90-241
B. The Bellfonte Company; Nisswa, MN.	BPH-880609MJ	
Issue Heading and Applicants		
1. Comparative, A,B		
2. Ultimate, A,B		
II		
A. Jo-A1 Broadcasting, Inc.; Texarkana, AR.	BPH-880616MP	90-238
B. B & H Broadcasting System, Inc.; Texarkana, AR.	BPH-880616MQ	
C. Patricia D. Camp and Ann E. Dupre' d/b/a Dupre' Broadcasting Co.; Texarkana, AR.	BPH-880616MW	
Issue Heading and Applicants		
1. Comparative, A,B,C		
2. Ultimate, A,B,C		
III		
A. LeeMay Broadcasting Services, Inc.; Byng, OK.	BPH-880805MV	90-239
B. (Rhonda L. Ricord & Jackson Samual Ott d/b/a) Central Oklahoma Communications Co.; Byng, OK.	BPH-880810ML	
C. Barry Edward Robb; Byng, OK.	BPH-880811MI	
D. Robert Stick; Byng, OK.	BPH-880811ML	
Issue Heading and Applicants		
1. Air Hazard, B,C,D		
2. Comparative, All applicants		
3. Ultimate, All applicants		
IV		
A. Trinity Valley Broadcasting, Co. Inc.; Woodville, TX.	BPH-880725NC	90-240
B. Charles Arnold Demaree; Woodville, TX.	BPH-880725NG	
Issue Heading and Applicants		
1. Comparative, A,B		
2. Ultimate, A,B		
V		
A. Lyn-Win Broadcasting, Inc.; Rose Hill, NC.	BPH-880616MR	90-242
B. Duplin County Broadcasters; Rose Hill, NC.	BPH-880616MS	
Issue Heading and Applicants		
1. Comparative, A,B		
2. Ultimate, A,B		

Applicant, City/State	File No.	MM docket No.
VI		
A. Family Life Ministries Radio, Inc.; Canandaigua, NY.	BPED-871203MD.	90-246
B. University of Rochester Broadcasting Corporation; Rochester, NY.	BPED-871208MC.	
C. Community Broadcasting Foundation, Inc.; Rochester, NY.	BPED-880912MB.	
Issue Heading and Applicants 1. Comparative, A,B,C 2. Contingent Comparative, A,B,C 3. Ultimate, A,B,C		
VII		
A. Southwest Florida Community Radio, Inc.; Sarasota, FL.	BPED-880624MJ.	
B. The Youth Foundation of America, Inc.; Sarasota, FL.	BPED-890531MC.	
Issue Heading and Applicants 1. Comparative-Noncommercial Educational FM A,B 2. Ultimate, A,B		

2. Pursuant to section 309(e) of the Communications Act of 1934, as amended, the above applications have been designated for hearing in a consolidated proceeding upon the issues whose headings are set forth below. The text of each of these issues has been standardized and is set forth in its entirety under the corresponding headings at 51 FR 19347, May 29, 1986. The letter shown before each applicant's name, above, is used below to signify whether the issue in question applies to that particular applicant.

3. If there is any non-standardized issue in this proceeding, the full text of the issue and the applicants to which it applies are set forth to an appendix to this Notice. A copy of the complete HDO in this proceeding is available for inspection and copying during normal business hours in the FCC Dockets Branch (room 230), 1919 M Street, NW., Washington, DC. The complete text may also be purchased from the Commission's duplicating contractor, International Transcription Services, Inc., 2100 M Street, NW., Washington, DC 20037. (Telephone (202) 857-3800).

W. Jan Gay,

Assistant Chief, Audio Services Division, Mass Media Bureau.

[FR Doc. 90-13257 Filed 6-6-90; 8:45 am]

BILLING CODE 6712-01-M

FEDERAL DEPOSIT INSURANCE CORPORATION

Financial Institutions Reform; Recovery, and Enforcement Act of 1989: Deposit Insurance Coverage; Changes

AGENCY: Federal Deposit Insurance Corporation ("FDIC").

ACTION: Notice.

SUMMARY: The Financial Institutions Reform, Recovery, and Enforcement Act of 1989 required the FDIC to adopt uniform deposit insurance regulations for banks and savings associations and to provide "effective notice" to depositors of changes resulting from the adoption of those regulations. On April 30, 1990, the FDIC's Board of Directors adopted uniform deposit insurance rules which will, for the most part, become effective July 29, 1990. The Board decided that the best way to provide effective notice of the changes in insurance coverage was to require each insured depository institution to send a standard notice to depositors (containing language provided by the FDIC) to all account holders or depositors in a one-time mailing. This notice will explain the requirements for reproducing and distributing that "Notice to Depositors" and will display a copy of the official prototype notice. Additionally, this notice will serve as further notification to the general public of the changes in deposit insurance coverage resulting from adoption of the uniform rules.

DATES: All FDIC-insured banks and savings associations must reproduce and send a copy of the "Notice of Depositors" to all account holders or depositors by July 29, 1990, or, for customers who have time deposits, prior to the first maturity date of those deposits after July 29, 1990.

ADDRESSES: Camera-ready copies of the Notice to Depositors have been mailed to each insured institution and additional copies are available from the FDIC Office of Corporate Communications, room 6058, 550 17th Street, NW., Washington, DC 20429 (202-898-6995).

FOR FURTHER INFORMATION CONTACT: Lori J. Sommerfeld, Paralegal Specialist, Legal Division (202-898-8515), Claude A. Rollin, Senior Attorney, Legal Division (202-898-3985), or Jay Rosenstein, Senior Writer-Editor, Office of Corporate Communications (202-898-7303), Federal Deposit Insurance Corporation, 550 17th Street, NW., Washington, DC 20429.

SUPPLEMENTARY INFORMATION: Section 402(c)(5)(A) of the Financial Institutions Reform, Recovery, and Enforcement Act of 1989 ("FIRREA") requires that the uniform deposit insurance regulations "provide for effective notice to depositors in insured depository institutions of any change in deposit insurance coverage which would result under such regulations."

The FDIC Board of Directors decided that the best way to provide effective notice was to require each insured institution to mail a notice to all of its depositors or account holders. This requirement was subsequently included in the uniform deposit insurance regulations governing deposits in both banks and savings associations, which the Board adopted April 30, 1990, pursuant to FIRREA (the uniform regulations are published at 55 FR 20111, May 15, 1990).

Section 330.15 of the uniform deposit insurance regulations (55 FR 20128; to be codified at 12 CFR 330.15) requires that each insured depository institution send a notice to all of its depositors, with language prescribed by the FDIC, in a one-time mailing no later than July 29, 1990. The Notice to Depositors may be sent either in a separate mailing or it may be sent as an enclosure with another mailing, such as a monthly or quarterly statement of account. Depositors who will not receive a monthly or quarterly account statement prior to July 29, 1990, must receive the notice during the same period or, in the case of a time deposit, prior to the first maturity date of the deposit after July 29, 1990.

The prototype notice, which contains the language which must be included in the Notice of Depositors, is set forth below. The language of the prototype must appear without any changes in the notice sent to each depositor. The same prescribed notice must be sent to all depositors, regardless of the type of deposit or the size of the account

balance. Depository institutions may, however, choose a format other than that used for the attached prototype, or they may personalize their notice by placing the name or symbol of their institution on the notice.

The prototype notice appears on the following two pages.

Dated at Washington, DC, this 25th day of May, 1990.

Federal Deposit Insurance Corporation.

Robert E. Feldman,

Deputy Executive Secretary.

BILLING CODE 6714-01-M

Important Information

From The Federal Deposit Insurance Corporation

What You Should Know About The New Deposit Insurance Rules

On April 30, 1990, the Federal Deposit Insurance Corporation (FDIC) adopted new rules for deposit insurance coverage that begin taking effect July 29, 1990. ***Most depositors will not be affected by the changes. The basic coverage that protects individual accounts for up to $100,000 and joint accounts for up to an additional $100,000 remains the same. Your insured deposits also continue to be backed by the full faith and credit of the United States.***

However, depending on the types of accounts you have and the amounts you have on deposit, you may be affected by some of the changes. This is to notify you of the changes and to help you determine whether your accounts may be affected.

You should be aware that deposit insurance only becomes a factor in the event that an institution where you have funds on deposit becomes insolvent and is closed. Typically, the FDIC is able to sell all the deposits of the failed institution to a healthy institution and service to customers is uninterrupted. If the FDIC cannot find a buyer for the failed institution, depositors will be paid up to the insurance limit of $100,000. The effect of the new insurance rules described below will be apparent *only* when the FDIC cannot find a buyer and has to reimburse depositors for their insured funds.

If after studying the new insurance rules you believe that some of your funds on deposit at any one institution are not fully insured, you should consult your institution to confirm that this is your situation. You may wish to consider ways to obtain total coverage. There usually is an easy way to obtain full coverage, such as simply transferring the excess funds to another institution.

Why are there new rules?

The Financial Institutions Reform, Recovery, and Enforcement Act of 1989 (FIRREA), a law enacted by the U.S. Congress, transferred the responsibilities of the former Federal Savings and Loan Insurance Corporation (FSLIC) to the FDIC. As a result, the FDIC now insures deposits in banks (using the "Bank Insurance Fund") as well as savings associations (using the "Savings Association Insurance Fund"). The new law also required the FDIC to eliminate differences that existed in deposit insurance coverage at banks and savings associations, which led to the rule changes that are summarized here.

When do the new rules become effective?

For most accounts, the rules take effect July 29, 1990. Certificates of deposit (CDs) and other time deposits will *not* be affected until the first maturity date after July 29, 1990. Certain other provisions of the new rules are phased-in at later dates, as specified elsewhere in this notice.

The following is a summary, in general terms, of the most important aspects of the new insurance rules that could differ from what some depositors have been accustomed to in the past.

PERSONAL ACCOUNTS

Single Ownership Accounts

- If more than one person has the right to withdraw funds from a single ownership account, it will be considered a joint account for purposes of calculating insurance coverage *unless* there is a Power of Attorney or *unless* account records clearly indicate that the second individual serving as an "authorized signer" on the account is not an owner of the funds on deposit.

Joint Ownership Accounts

- Each co-owner must sign a "signature card" for the institution's records as proof of joint ownership. No signature card is required for jointly owned certificates of deposit, negotiable instruments, or accounts established for joint owners by an agent, nominee, guardian, custodian or conservator.

Testamentary (Revocable Trust) Accounts

- A testamentary or revocable trust account is one where funds are paid to a beneficiary upon the death of the owner. When payable to a spouse, child or grandchild, the account is insured up to $100,000 separately from the $100,000 coverage granted to individual or joint accounts. *However,* when a husband and wife together establish a single revocable trust account and name themselves as the sole beneficiaries, the account is insured as a *joint account, not* as a testamentary account. This most often is seen as: "Husband and Wife in trust for Husband and Wife." This kind of account and any joint accounts held by both husband and wife in the same institution will be added together for insurance purposes.
- A testamentary or revocable trust account must have the terms "in trust for," "as trustee for," or "payable-on-death" *in the title of the account* in order to clearly indicate the intention that the funds pass to the named beneficiary upon the death of the other. It is permissible to use the abbreviations "ITF," "ATF" or "POD."
- Beneficiaries must be listed *by name* in the deposit account records of the depository institution.
- For insurance purposes, the following also *will* qualify as valid beneficiaries of testamentary (revocable trust) accounts: adopted children, adopted grandchildren, stepchildren and step-grandchildren.

Retirement Accounts

- A person's deposits in an Individual Retirement Account (IRA) will be insured *separately* from any interests in Keogh retirement account deposits which that person may have at the same institution. That is, each type of account — IRA and Keogh — will be separately insured up to $100,000.
- So-called "457 Plan" accounts are funds deposited by employers under deferred compensation programs for certain employees of state or local governments or tax-exempt organizations. Under the new rules, 457 Plan accounts at any one institution will be insured up to $100,000 in the aggregate, *not* up to $100,000 per employee or participant. However, the deposits of any 457 Plans in existence at savings institutions as of July 29, 1990, ***will continue to be covered up to $100,000 per participant*** until January 29, 1992, for new participants as well as for existing participants.

OTHER TYPES OF ACCOUNTS

Public Unit Accounts

- Public unit deposits are funds owned by cities, counties, states or other government entities. Time deposits, savings deposits and interest-bearing Negotiable Order of Withdrawal (NOW) accounts of a public unit in an institution in the same state will be insured up to $100,000 in the aggregate and separate from the $100,000 coverage for the public unit's demand deposits at the institution. A public unit's funds in an out-of-state institution, though, will have a single $100,000 insurance limit for all of its time, savings and demand deposits.

Mortgage Servicing Accounts

- Mortgage servicers maintain deposits at financial institutions that consist of either tax and insurance (T&I) payments or principal and interest (P&I) payments collected from mortgage loan borrowers. Deposits of P&I payments at any one institution will be insured up to $100,000 per account owner, such as investors who own the mortgages or who hold securities backed by the loan payments, and *not* up to $100,000 per each mortgage borrower as is the case with T&I accounts. For insurance purposes, any individual's interest in a T&I account will be added together with any single ownership accounts that the person may hold at the same institution and the total will be insured up to the insurance limit of $100,000.

Unit Investment Trust Deposits

- A unit investment trust is an investment vehicle, generally sponsored by a securities firm, in which investors buy shares in a fixed portfolio of securities and/or certificates of deposit. Eventually, when the underlying securities and CDs mature or are sold, the trust is dissolved and principal is returned to the investors. For insurance purposes, a unit investment trust's CDs will be treated as a corporation's deposits and will be insured up to the insurance limit of $100,000, *not* up to $100,000 for each individual investor in the trust.

CDs Used to Fund Life Insurance and Annuity Contracts

- Funds deposited by a life insurance company or other corporation solely to fund life insurance or annuity contracts will be insured up to $100,000 per individual entitled to receive benefits, provided three conditions are met. These are: 1) the life insurance company establishes a separate account for the funds; 2) the account cannot be used for any other business of the company; and 3) the account cannot be accessed by other creditors if the life insurance company becomes insolvent and its assets are liquidated.

Accounts Held by Depository Institutions in Fiduciary Capacities

- Deposits held by an insured institution in a trust department or in some other fiduciary capacity (such as an escrow agent) will be insured for up to $100,000 for each owner or beneficiary *and* will be insured separately from any other deposits of the owners or beneficiaries at the same institution. Funds held as executor or administrator for a deceased person's estate will be insured up to $100,000 per estate.

RECORDKEEPING REQUIREMENTS

- The deposit account records of a depository institution must specifically disclose the existence of any fiduciary relationship (such as trustee, agent, guardian or executor).
- Since an account may qualify for additional deposit insurance based on the relationships of the people involved, details of the relationships and any ownership interests of other parties must be evident from one of three sources. They are: 1) the deposit account records of the institution; 2) records maintained "in good faith" by the depositor; or 3) records maintained "in good faith" by some other person or entity, such as a pension plan administrator.
- The deposit account records that the FDIC will look at to determine insurance coverage include account ledgers, signature cards, certificates of deposit, passbooks and certain computer records of the institution. The FDIC *does not* look at account statements, deposit slips, items deposited or cancelled checks in order to determine the extent of insurance coverage.

IF YOUR INSTITUTION MERGES WITH ANOTHER

- Since insurance limits are based on a depositor's funds in any *one* institution, coverage can change if two or more institutions where you have funds on deposit merge. In this case, as in the past, deposits continue to be separately insured for six months from the date that the merger takes effect.
- Certificates of deposit will continue to be separately insured until the first maturity date *after* the end of the six-month transition period. CDs that mature during the six-month period and are renewed for the same term and same dollar amount, with or without interest, will continue to be separately insured until the first maturity date *after* the six-month period. CDs that mature during the six-month period and are renewed on any other basis, or that are not renewed and become demand deposits, will be separately insured only until the end of the six-month period.

FOR FURTHER INFORMATION

If, after reviewing this notice, you still have questions about how your accounts will be treated for insurance purposes, please contact your bank or savings association for more help. You also may write to the following address: FDIC, Office of Consumer Affairs, 550 17th Street, N.W., Washington, D.C. 20429.

The information in this notice is only a summary of aspects of the new insurance rules presented in a non-technical way. This notice is not intended to be a legal interpretation of the FDIC's laws and regulations on insurance coverage.

For a more complete description of the changes adopted by the FDIC, depositors or their advisors should refer to the final regulations published in the Federal Register. For more details about the technical aspects of insurance coverage, please consult the Federal Deposit Insurance Act (12 U.S.C. 1811-1833e) and the FDIC's final regulations.

[FR Doc. 90-13165 Filed 6-6-90; 8:45 am]
BILLING CODE 8714-01-C

FEDERAL EMERGENCY MANAGEMENT AGENCY

Board of Visitors for the Emergency Management Institute; Open Meeting

In accordance with section 10(a)(2) of the Federal Advisory Committee Act (Pub. L. 92-463), announcement is made of the following committee meeting:

Name: Board of Visitors (BOV) for the Emergency Management Institute (EMI)

Dates of Meeting: June 24-26, 1990

Place: Federal Emergency Management Agency, National Emergency Training Center, Emergency Management Institute, Conference Room, Building N, Emmitsburg, Maryland 21727.

Time: June 24—Executive Session 7-9 p.m.; June 25—8:30 a.m. to 5 p.m.; June 26—8:30 a.m. to 5 p.m.

Proposed Agenda: The six newly appointed members will be provided with an orientation of the Emergency Management Institute's programs. The current Chairperson will address the Board's 1990 workplan.

The meeting will be open to the public with approximately ten seats available on a first-come, first serve basis. Members of the general public who plan to attend the meeting should contact the Office of the Superintendent, Emergency Management Institute, Office of Training, 16825 South Seton Avenue, Emmitsburg, Maryland 21727 (telephone number, 301-447-1251) on or before June 18. Minutes of the meeting will be prepared by the Board and will be available for public viewing in the Director's Office, Office of Training, Federal Emergency Management Agency, Building N, National Emergency Training Center, Emmitsburg, Maryland 21727. Copies of the minutes will be available upon request 30 days after the meeting.

Dated: May 23, 1990.

Dave McLoughlin,

Director, Office of Training.

[FR Doc. 90-13232 Filed 6-6-90; 8:45 am]

BILLING CODE 6718-02-M

[FEMA-865-DR]

Amendment to Notice of a Major Disaster Delcaration; Arkansas

AGENCY: Federal Emergency Management Agency.

ACTION: Notice.

SUMMARY: This notice amends the notice of a major disaster for the State of Arkansas (FEMA-865-DR), dated May 15, 1990, and related determinations.

DATED: May 29, 1990.

FOR FURTHER INFORMATION CONTACT: Neva K. Elliott, Disaster Assistance Programs, Federal Emergency Management Agency, Washington, DC 20472 (202) 646-3614.

Notice

The notice of a major disaster for the State of Arkansas, dated May 15, 1990, is hereby amended to include the following areas among those areas determined to have been adversely affected by the catastrophe declared a major disaster by the President in his declaration of May 15, 1990:

The counties of Clark and Union for Individual Assistance and Public Assistance.

(Catalog of Federal Domestic Assistance No. 83.516, Disaster Assistance)

Grant C. Peterson,

Associate Director, State and Local Programs and Support, Federal Emergency Management Agency.

[FR Doc. 90-13233 Filed 6-6-90; 8:45 am]

BILLING CODE 6718-02-M

Amendment to Notice of a Major Disaster Declaration; Arkansas

[FEMA-865-DR]

AGENCY: Federal Emergency Management Agency.

ACTION: Notice.

SUMMARY: This notice amends the notice of a major disaster for the State of Arkansas (FEMA-865-DR), dated May 15, 1990, and related determinations.

DATED: May 22, 1990.

FOR FURTHER INFORMATION CONTACT: Neva K. Elliott, Disaster Assistance Programs, Federal Emergency Management Agency, Washington, DC 20472 (202) 646-3614.

Notice

The notice of a major disaster for the State of Arkansas, dated May 15, 1990, is hereby amended to include the following areas among those areas determined to have been adversely affected by the catastrophe declared a major disaster by the President in his declaration of May 15, 1990:

The counties of Columbia, Hot Spring, and Miller for Individual Assistance.

(Catalog of Federal Domestic Assistance No. 83.516, Disaster Assistance)

Grant C. Peterson,

Associate Director, State and Local Programs and Support, Federal Emergency Management Agency.

[FR Doc. 90-13234 Filed 6-6-90; 8:45 am]

BILLING CODE 6718-02-M

Amendment to Notice of a Major Disaster Declaration; Arkansas

[FEMA-865-DR]

AGENCY: Federal Emergency Management Agency.

ACTION: Notice.

SUMMARY: This notice amends the notice of a major disaster for the State of Arkansas (FEMA-865-DR], dated May 15, 1990, and related determinations.

DATED: June 1, 1990.

FOR FURTHER INFORMATION CONTACT: Neva K. Elliott, Disaster Assistance Programs, Federal Emergency Management Agency, Washington, DC 20472 (202) 646-3614.

Notice

The notice of a major disaster for the State of Arkansas, dated May 15, 1990, is hereby amended to include the following areas among those areas determined to have been adversely affected by the catastrophe declared a major disaster by the President in his declaration of May 15, 1990:

The counties of Hot Spring, and Jefferson for Individual Assistance.

Notice is hereby given that the incident period for this disaster is closed effective June 1, 1990.

(Catalog of Federal Domestic Assistance No. 83.516, Disaster Assistance)

Richard W. Krimm,

Acting Deputy Associate Director, State and Local Programs and Support, Federal Emergency Management Agency.

[FR Doc. 90-13235 Filed 6-6-90; 8:45 am]

BILLING CODE 6718-02-M

[FEMA-867-DR]

Amendment to Notice of a Major Disaster Declaration; Missouri

AGENCY: Federal Emergency Management Agency.

ACTION: Notice.

SUMMARY: This notice amends the notice of a major disaster for the State of Missouri (FEMA-867-DR), dated May 24, 1990, and related determinations.

DATED: May 30, 1990.

FOR FURTHER INFORMATION CONTACT: Neva K. Elliott, Disaster Assistance Programs, Federal Emergency Management Agency, Washington, DC 20472, (202) 646-3614.

Notice

The notice of a major disaster for the State of Missouri, dated May 24, 1990, is hereby amended to include Public Assistance in the following areas among those areas determined to have been adversely affected by the catastrophe declared a major disaster by the President in his declaration of May 24, 1990:

Jackson County and the City of Kansas City for Public Assistance

(Catalog of Federal Domestic Assistance No. 83.516, Disaster Assistance)

Grant C. Peterson,

Associate Director, State and Local Programs and Support, Federal Emergency Management Agency.

[FR Doc. 90-13236 Filed 6-6-90; 8:45 am]

BILLING CODE 6718-02-M

[FEMA-867-DR]

Amendment to Notice of a Major Disaster Declaration; Missouri

AGENCY: Federal Emergency Management Agency.

ACTION: Notice.

SUMMARY: This notice amends the notice of a major disaster for the State of Missouri (FEMA-867-DR), dated May 24, 1990, and related determinations.

DATED: May 31, 1990.

FOR FURTHER INFORMATION CONTACT: Neva K. Elliott, Disaster Assistance Programs, Federal Emergency Management Agency, Washington, DC 20472, (202) 646-3614.

Notice

Notice is hereby given that the incident period for this disaster is closed effective May 31, 1990.

(Catalog of Federal Domestic Assistance No. 83.516, Disaster Assistance)

Richard W. Krimm,

Acting Deputy Associate Director, State and Local Programs and Support, Federal Emergency Management Agency.

[FR Doc. 90-13237 Filed 6-6-90; 8:45 am]

BILLING CODE 6718-02-M

[FEMA-866-DR]

Amendment to Notice of a Major Disaster Declaration; Oklahoma

AGENCY: Federal Emergency Management Agency.

ACTION: Notice.

SUMMARY: This notice amends the notice of a major disaster for the State of Oklahoma (FEMA-866-DR), dated May 18, 1990, and related determinations.

DATED: May 25, 1990.

FOR FURTHER INFORMATION CONTACT: Neva K. Elliott, Disaster Assistance Programs, Federal Emergency Management Agency, Washington, D.C. 20472 (202) 646-3614.

Notice

The notice of a major disaster for the State of Oklahoma, dated May 18, 1990, is hereby amended to include the following areas among those areas determined to have been adversely affected by the catastrophe declared major disaster by the President in his declaration of May 18, 1990:

The counties of Garvin, Kingfisher, Logan, McClain, McCurtain, Pontotoc, Seminole, and Stephens for Individual Assistance and Public Assistance.

(Catalog of Federal Domestic Assistance No. 83.516, Disaster Assistance)

Grant C. Peterson,

Associate Director, State and Local Programs and Support, Federal Emergency Management Agency.

[FR Doc. 90-13238 Filed 6-6-90; 8:45 am]

BILLING CODE 6718-02-M

[FEMA-863-DR]

Amendment to Notice of a Major Disaster Declaration; Texas

AGENCY: Federal Emergency Management Agency.

ACTION: Notice.

SUMMARY: This notice amends the notice of a major disaster for the State of Texas (FEMA-863-DR), dated May 2, 1990, and related determinations.

DATED: May 31, 1990.

FOR FURTHER INFORMATION CONTACT: Neva K. Elliott, Disaster Assistance Programs, Federal Emergency Management Agency, Washington, DC 20472 (202) 646-3614.

Notice

The notice of a major disaster for the State of Texas, dated May 2, 1990, is hereby amended to include the following areas among those areas determined to have been adversely affected by the catastrophe declared a major disaster by the President in his declaration of May 2, 1990:

The counties of Callahan, Hamilton, Jack, Red River, and Shackelford for Individual Assistnce and Public Assistance; and

The counties of Clay, Cooke, Kaufman, Montague, Navarro, and Wichita for Public Assistance. (These counties were previously designated for Individual Assistance.)

(Catalog of Federal Domestic Assistance No. 83.516, Disaster Assistance)

Grant C. Peterson,

Associate Director, State and Local Programs and Support, Federal Emergency Management Agency.

[FR Doc. 90-13239 Filed 6-6-90; 8:45 am]

BILLING CODE 6718-02-M

[FEMA-863-DR]

Amendment to Notice of a Major Disaster Declaration; Texas

AGENCY: Federal Emergency Management Agency.

ACTION: Notice.

SUMMARY: This notice amends the notice of a major disaster for the State of Texas (FEMA-863-DR), dated May 2, 1990, and related determinations.

DATED: May 29, 1990.

FOR FURTHER INFORMATION CONTACT: Neva K. Elliott, Disaster Assistance Programs, Federal Emergency Management Agency, Washington, DC. 20472 (202) 646-3614.

Notice

The notice of a major disaster for the State of Texas, dated May 2, 1990, is hereby amended to include the following areas among those areas determined to have been adversely affected by the catastrophe declared a major disaster by the President in his declaration of May 2, 1990:

Navarro County for Individual Assistance.

(Catalog of Federal Domestic Assistance No. 83.516, Disaster Assistance)

Grant C. Peterson,

Associate Director, State and Local Programs and Support Federal Emergency Management Agency.

[FR Doc. 90-13246 Filed 6-6-90; 8:45 am]

BILLING CODE 6718-02-M

[FEMA-863-DR]

Amendment to Notice of a Major Disaster Declaration; Texas

AGENCY: Federal Emergency Management Agency.

ACTION: Notice.

SUMMARY: This notice amends the notice of a major disaster for the State of Texas (FEMA-863-DR), dated May 2, 1990, and related determinations.

DATED: May 29, 1990.

FOR FURTHER INFORMATION CONTACT: Neva K. Elliott, Disaster Assistance Programs, Federal Emergency Management Agency, Washington, DC 20472 (202) 646-3614.

Notice

Notice is hereby given that the incident period for this disaster is closed effective May 29, 1990.

(Catalog of Federal Domestic Assistance No. 83.516, Disater Assistance)

Grant C. Peterson,

Associate Director, State and Local Programs and Support, Federal Emergency Management Agency.

[FR Doc. 90-13247 Filed 6-6-90; 8:45 am]

BILLING CODE 6718-02-M

FEDERAL RESERVE SYSTEM

Consumer Advisory Council; Solicitation of Nominations for Membership

AGENCY: Board of Governors of the Federal Reserve System.

ACTION: Solicitation of nominations for membership on the Board's Consumer Advisory Council.

SUMMARY: The Board is asking the public to nominate qualified individuals for appointment to its Consumer Advisory Council, which is comprised of representatives both of consumer and community interests and of the financial services industry. Nine new members will be selected for three-year terms that will begin in January 1991. The Board expects to announce the selection of new members by year-end 1990.

DATES: Nominations should be received by August 31, 1990.

ADDRESSES: Nominations should be submitted in writing to Dolores S. Smith, Assistant Director, Division of Consumer and Community Affairs, Board of Governors of the Federal Reserve System, Washington, DC 20551. Information about nominees will be available for inspection upon request.

FOR FURTHER INFORMATION CONTACT: Bedelia Calhoun, Staff Specialist, Division of Consumer and Community Affairs, (202) 452-2412; or for Telecommunications Device for the Deaf (TDD) users *only*, Earnestine Hill or Dorothea Thompson (202) 452-3544; Board of Governors of the Federal Reserve System, Washington, DC 20551.

SUPPLEMENTARY INFORMATION: The Consumer Advisory Council was established in 1976 at the direction of Congress to advise the Federal Reserve Board on the exercise of its duties under the Consumer Credit Protection Act and on other consumer-related matters. The Council by law represents the interests both of consumers and of the financial community. Members serve three-year terms that are staggered to provide the Council with continuity.

New members will be selected this year for terms beginning January 1, 1991, to replace members whose terms expire this year. Nominations should include the address and telephone number of the nominee, information about past and present positions held, and a description of special knowledge, interests or experience related to consumer credit or other consumer financial services. Persons may nominate themselves as well as other candidates.

The Board is interested in candidates who are willing to express their viewpoints and who have some familiarity with consumer financial services. Candidates do not have to be experts on all levels of consumer financial services, but they should possess some basic knowledge of the area. In addition, they should be able to make the necessary time commitment to prepare for and attend meetings (usually two days long including committee meetings) three times a year.

In making the appointments, the Board will seek to complement the qualifications of continuing Council members in terms of affiliation and geographic representation, and to ensure the representation of women and minority groups. The Board expects to announce its selection of new members by year-end.

The Council's meetings are held in Washington, DC. Council members receive $100 per day for participating in meetings and for travel time. The Board also pays travel expenses.

The names and affiliations of current Council members (and the expiration date of each term of office) are listed below:

MEMBERS WHOSE TERMS EXPIRE IN 1990

William E. Odom, Chairman and Chief Executive Officer, Ford Motor Credit Company, Dearborn, Michigan, December 1990

Jerry D. Craft, Senior Vice President, First National Bank of Atlanta, Atlanta, Georgia, December 1990

Betty Tom Chu, Chairman, Trust Savings Bank, Arcadia, California, December 1990

Donald C. Day, President, New England Securities Corp., Boston, Massachusetts, December 1990

Robert A. Hess, President, Wright Patman Congressional Federal Credit Union, U.S. House of Representatives, Washington, D.C., December 1990

A.J. (Jack) King, Chairman & Chief Executive Officer, Valley Bank of Kalispell, Kalispell, Montana, December 1990

Sandra L. Phillips, Executive Director, Pittsburgh Partnership for Neighborhood Development, Pittsburgh, Pennsylvania, December 1990

Ralph E. Spurgin, President & CEO, Limited Credit Services, Inc., Columbus, Ohio, December 1990

Lawrence Winthrop, President, Consumer Credit Counseling Service of Oregon, Inc., Portland, Oregon, December 1990

MEMBERS WHOSE TERMS CONTINUE THROUGH 1990 AND 1991

George H. Braasch, Corporate Credit Counsel, Spiegel, Inc., Oak Brook, Illinois, December 1991

Cliff E. Cook, Vice President, Compliance Officer, Puget Sound Bank, Tacoma, Washington, December 1991

R.B. (Joe) Dean, Jr., Administrator, Community and Consumer Affairs, South Carolina National Bank, Columbia, South Carolina, December 1991

William C. Dunkelberg, Dean, School of Business and Management, and Temple University, Philadelphia, Pennsylvania, December 1991

James Fletcher, President & Director, South Shore Bank Chicago, Chicago, Illinois, December 1991

George C. Galster, Professor of Economics, Department of Economics, The College of Wooster, Wooster, Ohio, December 1992

E. Thomas Garman, Professor Consumer Studies, Virginia Polytechnic Institute and State University, Blacksburg, Virginia, December 1992

Deborah B. Goldberg, Reinvestment Specialist, Center for Community Change, Washington, DC, December 1992

Michael M. Greenfield, Professor of Law, Washington University, School of Law, St. Louis, Missouri, December 1992

James W. Head, Executive Director & Attorney, National Economic Development and Law Center, Berkeley, California, December 1991

Barbara Kaufman, Co-Director, KCBS Call for Action, San Francisco, California, December 1991

Kathleen E. Keest, Staff Attorney, National Consumer Law Center, Boston, Massachusetts, December 1992

Colleen D. McCarthy, Executive Director, Kansas City Neighborhood Alliance, Kansas City, Missouri, December 1992

Michelle S. Meier, Counsel for Government Affairs, Consumers Union, Washington, DC, December 1991

Linda K. Page, President & Chief Operating Officer, Star Bank Columbus, Worthington, Ohio, December 1991

Bernard F. Parker, Jr., Executive Director, Community Resource Projects, Detroit, Michigan, December 1992

Vincent P. Quayle, Director, St. Ambrose Housing Aid Center, Baltimore, Maryland, December 1991

Clifford N. Rosenthal, Executive Director, National Federation of Community Development Credit Unions, New York, New York, December 1991

Alan M. Silberstein, Senior Vice President, Chemical Bank, New York, New York, December 1991

Nancy Harvey Steorts, President, Nancy Harvey Steorts & Associates, Chevy Chase, Maryland, December 1992

David B. Ward, Esq., Of Counsel, Gebhardt & Kieffer, Clinton, New Jersey, December 1991

Board of Governors of the Federal Reserve System, June 1, 1990.

Jennifer J. Johnson,

Associate Secretary to the Board.

[FR Doc. 90-13182 Filed 6-6-90; 8:45 am]

BILLING CODE 6210-01-M

Bank South Corporation, et al.; Formations of; Acquisitions by; and Mergers of Bank Holding Companies

The companies listed in this notice have applied for the Board's approval under section 3 of the Bank Holding Company Act (12 U.S.C. 1842) and § 225.14 of the Board's Regulation Y (12 CFR 225.14) to become a bank holding company or to acquire a bank or bank holding company. The factors that are considered in acting on the applications are set forth in section 3(c) of the Act (12 U.S.C. 1842(c)).

Each application is available for immediate inspection at the Federal Reserve Bank indicated. Once the application has been accepted for processing, it will also be available for inspection at the offices of the Board of Governors. Interested persons may express their views in writing to the Reserve Bank or to the offices of the Board of Governors. Any comment on an application that requests a hearing must include a statement of why a written presentation would not suffice in lieu of a hearing, identifying specifically any questions of fact that are in dispute and summarizing the evidence that would be presented at a hearing.

Unless otherwise noted, comments regarding each of these applications must be received not later than June 26, 1990.

A. Federal Reserve Bank of Atlanta (Robert E. Heck, Vice President) 104 Marietta Street, NW., Atlanta, Georgia 30303:

1. *Bank South Corporation,* Atlanta, Georgia; to merge with Metro Bancorp, Inc., Douglasville, Georgia, and thereby indirectly acquire The Commercial Bank, Douglasville, Georgia.

B. Federal Reserve Bank of Chicago (David S. Epstein, Vice President) 230 South LaSalle Street, Chicago, Illinois 60690:

1. *INB Financial Corporation,* Indianapolis, Indiana; to acquire 100 percent of the voting shares of Peoples Mid-Illinois Corporation, Bloomington, Illinois, and thereby indirectly acquire The Peoples State Bank, Bloomington, Illinois.

2. *INB-Illinois Corporation,* Indianapolis, Indiana; to become a bank holding company by acquiring 100 percent of the voting shares of Peoples Mid-Illinois Corporation, Bloomington, Illinois, and thereby indirectly acquire The Peoples State Bank, Bloomington, Illinois.

3. *Logan Bancorporation, Inc.,* Logan, Iowa; to become a bank holding company by acquiring 100 percent of the voting shares of The First National Bank of Logan, Logan, Iowa.

4. *Westbank Financial Corporation,* Naperville, Illinois; to acquire 100 percent of the voting shares of First National Bank of Wheaton, Wheaton, Illinois.

C. Federal Reserve Bank of Minneapolis (James M. Lyon, Vice President), 250 Marquette Avenue, Minneapolis, Minnesota 55480:

1. *Three Forks Bancorporation,* Three Forks, Montana; to acquire 1.31 percent of the voting shares of Citizens Bancshares, Inc., Bozeman, Montana.

D. Federal Reserve Bank of Kansas City (Thomas M. Hoenig, Vice President) 925 Grand Avenue, Kansas City, Missouri 64198:

1. *Minden Exchange Company,* Minden, Nebraska; to become a bank holding company by acquiring at least 80 percent of the voting shares of Minden Exchange Bank and Trust Company, Minden, Nebraska.

E. Federal Reserve Bank of Dallas (W. Arthur Tribble, Vice President) 400 South Akard Street, Dallas, Texas 75222:

1. *San Diego Bancshares, Inc.,* San Diego, Texas; to become a bank holding company by acquiring 99.15 percent of the voting shares of First State Bank of San Diego, San Diego, Texas.

Board of Governors of the Federal Reserve System, June 1, 1990.

Jennifer J. Johnson,

Associate Secretary of the Board.

[FR Doc. 90-13183 Filed 6-6-90; 8:45 am]

BILLING CODE 6210-01-M

Crown National Bancorporation, Inc.; Applicaton to Engage de novo in Permissible Nonbanking Activities

The company listed in this notice has filed an application under section 225.23(a)(1) of the Board's Regulation Y (12 CFR 225.23(a)(1)) for the Board's approval under section 4(c)(8) of the Bank Holding Company Act (12 U.S.C. 1843(c)(8)) and 225.21(a) of Regulation Y (12 CFR 225.21(a)) to commence or to engage *de novo,* either directly or through a subsidiary, in a monbanking activity that is listed in § 225.25 of Regulation Y as closely related to banking and permissible for bank holding companies. Unless otherewise noted, such activities will be conducted throughout the United States.

The application is available for immediate inspection at the Federal Reserve Bank indicated. Once the application has been accepted for processing, it will also be available for inspection at the offices of the Board of Govenors. Interested persons may express their views in writing on the question whether consummation of the proposal can "reasonably be expected to produce benefits to the public, such as greater convenience, increased competition, or gains in efficiency, that outweigh possible adverse effects, such as undue concentration of resources, decreased or unfair competition, conflicts of interests, or unsound banking practices." Any request for a hearing on this question must be accompanied by a statement of the reasons a written presentation would not suffice in lieu of a hearing identifying specifically any questions of fact that are in dispute, summarizing the evidence that would be presented at a hearing, and indicating how the party commenting would be aggrieved by approval of the proposal.

Comments regarding the application must be received at the Reserve Bank indicated or the offices of the Board of Governors not later than June 26, 1990.

A. Federal Reserve Bank of Richmond (Lloyd W. Bostian, Jr., Vice President) 701 East Byrd Street, Richmond, Virginia 23261:

1. *Crown National Bancorporation, Inc.,* Charlotte, North Carolina; to engage *de novo* through its subsidiary, Crown National Leasing company, Charolotte, North Carolina, in leasing automobiles and equipment to individuals and businesses pursuant to § 2225.25(b)(5) of the Board's Regulation Y.

Board of Governors of the Federal Reserve System, June 1, 1990.

Jennifer J. Johnson,

Associate Secretary of the Board.

[FR Doc. 90-13184 Filed 6-6-90; 8:45am]

BILLING CODE 6210-01-M

Fred J. Hall, et al., Change in Bank Control Notices; Acquisitions of Shares of Banks or Bank Holding Companies

The notifications listed below have applied under the Change in Bank Control Act (12 U.S.C. 1817(j)) and § 225.41 of the Board's Regulation Y (12 CFR 225.41) to acquire a bank or bank holding company. The factors that are considered in acting on the notices are set forth in paragraph 7 of the Act (12 U.S.C. 1817(j)(7)).

The notices are available for immediate inspection at the Federal Reserve Bank indicated. Once the notices have been accepted for processing, they will also be available for inspection at the offices of the Board of Governors. Interested persons may express their views in writing to the Reserve Bank indicated for that notice or to the offices of the Board of Governors. Comments must be received not later than June 21, 1990.

A. Federal Reserve Bank of Kansas City (Thomas M. Hoenig, Vice President) 925 Grand Avenue, Kansas City, Missouri 64198:

1. *Fred J. Hall,* Brooks Hall, Jr., and Kirkland Hall, all of Oklahoma City, Oklahoma; to each acquire 33.33 percent of the voting shares of Capital National Bancshares, Inc., Oklahoma City, Oklahoma, and thereby indirectly acquire Capital National Bank, Oklahoma City, Oklahoma.

B. Federal Reserve Bank of Dallas (W. Arthur Tribble, Vice President) 400 South Akard Street, Dallas, Texas 75222:

1. *Artis Thomas Edzards,* Paris, Texas; to acquire 2.08 percent of the voting shares of Lamar Bancorporation, Inc., Paris, Texas, and thereby indirectly acquire Lamar National Bank, Paris, Texas.

C. Federal Reserve Bank of San Francisco (Harry W. Green, Vice President) 101 Market Street, San Francisco, California 94105:

1. *Fai Heng Chan,* Vancouver, B.C., Canada; to acquire 40.87 percent of the voting shares of American Pacific Bank, Aumsville, Oregon.

Board of Governors of the Federal Reserve System, June 1, 1990.

Jennifer J. Johnson,

Associate Secretary of the Board.

[FR Doc. 90-13185 Filed 6-6-90; 8:45 am]

BILLING CODE 6210-01-M

First Financial Bancorp, et al.; Acquisitions of Companies Engaged in Permissible Nonbanking Activities

The organizations listed in this notice have applied under § 225.23 (a)(2) or (f) of the Board's Regulation Y (12 CFR 225.23 (a)(2) or (f)) for the Board's approval under section 4(c)(8) of the Bank Holding Company Act (12 U.S.C. 1843(c)(8)) and § 225.21(a) of Regulation Y (12 CFR 225.21(a)) to acquire or control voting securities or assets of a company engaged in a nonbanking activity that is listed in § 225.25 of Regulation Y as closely related to banking and permissible for bank holding companies. Unless otherwise noted, such activities will be conducted throughout the United States.

Each application is available for immediate inspection at the Federal Reserve Bank indicated. Once the application has been accepted for processing, it will also be available for inspection at the offices of the Board of Governors. Interested persons may express their views in writing on the question whether consummation of the proposal can "reasonably be expected to produce benefits to the public, such as greater convenience, increased competition, or gains in efficiency, that outweigh possible adverse effects, such as undue concentration of resources, decreased or unfair competition, conflicts of interests, or unsound banking practices." Any request for a hearing on this question must be accompanied by a statement of the reasons a written presentation would not suffice in lieu of a hearing, identifying specifically any questions of fact that are in dispute, summarizing the evidence that would be presented at a hearing, and indicating how the party commenting would be aggrieved by approval of the proposal.

Unless otherwise noted, comments regarding each of these applications must be received at the Reserve Bank indicated for the application or the offices of the Board of Governors not later than June 26, 1990.

A. Federal Reserve Bank of Cleveland (John J. Wixted, Jr., Vice President) 1455 East Sixth Street, Cleveland, Ohio 44101:

1. *First Financial Bancorp,* Monroe, Ohio; to acquire Fidelity Federal Savings Bank, Marion, Indiana, and thereby engage in savings and loan activities pursuant to § 225.25(b)(9) of the Board's Regulation Y.

B. Federal Reserve Bank of Richmond (Lloyd W. Bostian, Jr., Vice President) 701 East Byrd Street, Richmond, Virginia 23261:

1. *BB&T Financial Corporation,* Wilson, North Carolina; to acquire First Federal Savings Bank of Pitt County, Greenville, North Carolina, and thereby engage in deposit taking and loan making activities performed by a savings and loan association pursuant to § 225.25(b)(9) of the Board's Regulation Y.

2. *First Citizens BancShares, Inc.,* Raleigh, North Carolina; to acquire Catawba SavShares, Inc., Charlotte, North Carolina, and its subsidiary, Mutual Savings and Loan Association, Inc., Charlotte, North Carolina, and thereby engage in owning and operating a state-chartered savings and loan association pursuant to § 225.25(b)(9) of the Board's Regulation Y. These activities will be conducted in Charlotte and Matthews, North Carolina.

C. Federal Reserve Bank of Kansas City (Thomas M. Hoenig, Vice President) 925 Grand Avenue, Kansas City, Missouri 64198:

1. *TeamBanc, Inc.,* Paola, Kansas, and The Miami County National Bank of Paola Employees Stock Ownership Plan, Paola, Kansas; to acquire Iola Bancshares, Inc., Iola, Kansas, d/b/a, Gilpin Insurance Agency, and thereby engage in the sale of life, accident and health, and unemployment insurance directly related to extensions of credit by Iola Bank and Trust Co., a subsidiary of Iola Bancshares) pursuant to § 225.25(b)(8)(i) of the Board's Regulation Y. Comments on this application must be received by June 21, 1990.

Board of Governors of the Federal Reserve System, June 1, 1990.

Jennifer J. Johnson,

Associate Secretary of the Board.

[FR Doc. 90-13186 Filed 6-6-90; 8:45 am]

BILLING CODE 6210-01-M

GENERAL SERVICES ADMINISTRATION

Notice of Intent To Prepare an Environmental Impact Statement for the Proposed Construction of an Import Lot and Dock at the Juarez/Lincoln Border Station, Laredo, TX

The General Services Administration (GSA) is preparing an Environmental Impact Statement (EIS) for the proposed construction of an import lot with an 86-truck capacity dock and supporting offices and warehouses in Laredo, Texas. The U.S. Army Corps of Engineers is acting as the lead agent for the GSA for preparation of the EIS. The project area is bounded on the west by the existing Juarez/Lincoln Border Station, on the north by Hidalgo Street, on the east by Zacate Creek, and on the south by the Rio Grande River.

There are two existing bridges serving two inspection facilities in Laredo, Texas. The older bridge is the Convent Street Bridge. The newer bridge, known as the Juarez/Lincoln Bridge, was completed in 1976. A new Border Station at this bridge was completed in 1982. The existing commercial import lot is located between the two bridges. Both commercial and non-commercial traffic use the old facility, and traffic on Convent Street near the old facility is very congested. Most commercial vehicles enter the United States across the old Convent Street Bridge and proceed eastbound through the old import lot to the truck dock. After the commercial vehicles are processed, they exist onto Water Street and proceed west under the Convent Street Bridge and then into the streets of downtown Laredo.

The Juarez/Lincoln facility contains enough expansion capability to handle all non-commercial traffic which can possibly cross the new bridge. Currently, only one-half of the primary vehicle inspection lanes at the new facility are in use and only one of the two headhouses is being used for inspections.

In an attempt to relieve traffic congestion on Convent Street, the Government of Mexico has constructed a new truck road to divert a portion of the commercial traffic to the new Juarez/Lincoln Bridge. The proposed Juarez/Lincoln Border Station expansion will consist of a new commercial import lot and truck dock to be constructed east of the present Border Station.

The primary purpose of the proposed action is to provide a modern commercial traffic handling extension to the Juarez/Lincoln Border Station, which will provide relief for the congested existing import lot and allow for future expansion at the Juarez/Lincoln crossing.

The GSA has made a determination that the proposed action will require the preparation of an EIS. Potential environmental and socio-economic impacts resulting from different project alternatives will be evaluated in the EIS. The proposed action, the alternative of taking no action, and other feasible alternative actions such as utilizing other sites and/or constructing different sizes of facilities will be included in the EIS. Information regarding climate, air and noise quality, geological resources, biological resources, ground water and surface water resources, floodplain management, cultural and historical resources, socio-economics and housing, land use and zoning, municipal utilities and traffic and mass transit effects will be presented in the EIS. Potential short-term and long-term impacts will be discussed in the EIS.

A scoping meeting is scheduled to provide interested parties with an opportunity to identify the significant issues which will arise as a result of the proposed project and alternatives. The details of the proposed scoping meeting are described below:

Scoping Meeting

Date: 12 June 1990 (Tuesday).

Time: 7 p.m.

Place: Laredo Civic Center, 2400 San Bernardo, Laredo, TX 78740.

The scoping meeting will be held in accordance with the requirements of § 1501.7 of the Council on Environmental Quality's "Regulations for Implementing the Procedural Provisions of the National Environmental Policy Act". The scoping meeting will be held in order to:

(a) Determine the scope and significance of the issues to be analyzed in depth in the EIS;

(b) Identify and eliminate from the EIS detailed studies regarding issues which are not significant or which have been covered by prior environmental reviews;

(c) Determine if other public EIS's or environmental assessments contain information relevant to this proposed project; and

(d) Identify other environmental review and/or consultation requirements.

All persons are requested to register in person if they elect to make an oral presentation at the meeting. Oral presentations will be limited to five (5) minutes each. Written comments are encouraged and will be accepted for incorporation into the record at the scoping meeting, and for 24 calendar days following the meeting.

For more information or to submit written material for the scoping meeting, please contact or direct correspondence to:

Mr. Paul M. Hathorn, Fort Worth District, US Army Corps of Engineers, 819 Taylor Street, room 13A20, Fort Worth, Texas 76102-0300, (817) 334-2095.

Earl W. Eschbacher, Jr.,

Assistant Regional Administrator, Public Buildings Service, General Services Administration.

[FR Doc. 90-13202 Filed 6-6-90; 8:45 am]

BILLING CODE 6820-23-M

DEPARTMENT OF HEALTH AND HUMAN SERVICES

Centers for Disease Control

National Institute for Occupational Safety and Health (NIOSH), Centers for Disease Control (CDC), Sampling and Analysis of Airborne Diesel Exhaust Particulates: Meeting

Name: Sampling and Analysis of Airborne Diesel Exhaust Particulates.

Time and Date: 1 p.m.-5 p.m., June 28, 1990.

Place: Alice Hamilton Laboratory, NIOSH, CDC, Conference Room C, 5555 Ridge Avenue, Cincinnati, Ohio 45213.

Status: Open to the public, limited only by the space available.

Purpose: To conduct an open meeting for the review of a project entitled, "Sampling and Analysis of Airborne Diesel Exhaust Particulates." This project concerns investigation of proposed sampling and analytical methodology for monitoring worker exposure to particle emissions from diesel-powered equipment.

CONTACT PERSON FOR ADDITIONAL INFORMATION: M. Eileen Birch, Ph.D., NIOSH, CDC, 4676 Columbia Parkway, PO3, Cincinnati, Ohio 45226, telephone 513/841-4298 or FTS 684-4298.

Dated: June 1, 1990.

Elvin Hilyer,

Associate Director for Policy Coordination, Centers for Disease Control.

[FR Doc. 90-13212 Filed 6-6-90; 8:45 am]

BILLING CODE 4160-19-M

Cooperative Research and Development Agreement

AGENCY: Centers for Disease Control (CDC), Public Health Service, HHS.

ACTION: Notice.

SUMMARY: The Centers for Disease Control (CDC), Center for Environmental Health and Injury Control, Division of Environmental Health Laboratory Sciences, desires to enter into a Cooperative Research and Development Agreement (CRADA) with manufacturers of analytic instrumentation to develop and/or improve the technology and ruggedness of analytical systems for the measurement of blood lead in childhood lead poisoning screening programs. The collaborator and CDC will jointly perform research aimed at the development of an improved blood lead instrument which includes improving the technique of anodic stripping voltametry (ASV) (or other appropriate technique) to achieve accuracy and precision, low detection limits, instrument ruggedness and low cost for the measurement of blood lead in children. The CDC will provide technical expertise, consultation and guidance, reference samples, analytical support, and product evaluation and testing.

It is anticipated that all inventions that may arise from this CRADA will be jointly owned and with an option for an exclusive royalty-bearing license to the collaborator with which the CRADA is made. The CRADA will be executed for a 2-year period with the possibility of renewal for another 2-year period.

Because CRADAs are designed to facilitate the development of scientific and technological knowledge into useful, marketable products, a great deal of latitude is given to Federal agencies in implementing collaborative research. As a Federal agency, the CDC may accept staff, facilities, equipment, supplies, and money from the other participants in a CRADA; CDC may provide staff, facilities, equipment, and supplies to the project. The single restriction in this exchange is that CDC may not provide funds to the other participants in a CRADA.

SUPPLEMENTARY INFORMATION: This opportunity is available until 30 days after publication of this notice. Respondents may be provided a longer period of time to furnish additional information if CDC finds this necessary. For additional information contact:

Technical Contact(s)

Dayton T. Miller, Ph.D. or Daniel C. Paschal, Ph.D., Nutritional Biochemistry Branch, Environmental Health Laboratory Sciences, Center for Environmental Health and Injury Control, Centers for Disease Control, 1600 Clifton Road NE., Mailstop F18, Atlanta, GA 30333, telephone (404) 488-4579.

Business Contact

Jim Holler, Ph.D., Toxicology Branch, Division of Environmental Health Laboratory Sciences, Center for Environmental Health and Injury Control, Centers for Disease Control, 1600 Clifton Road NE., Mailstop F17, Atlanta, GA 30333, telephone (404) 488-4176.

Applicants will be judged according to the following criteria:

1. Soundness of the analytic approach and research plan;
2. Adequacy and technical capabilities of the staff to develop the desired technique and product;
3. Ability to develop, produce, market and support commercial analytical instruments;
4. Evidence of scientific credibility; and
5. Ability to complete the CRADA in a timely fashion.

This CRADA is proposed and implemented under the 1986 Federal Technology Transfer Act: Public Law 99-502.

The responses must be made to: R. Eric Greene, Technology Transfer Coordinator, Centers for Disease Control, 1600 Clifton Road NE., Mailstop A20, Atlanta, GA 30333.

Dated: June 1, 1990.

Robert L. Foster,

Acting Director, Office of Program Support, Centers for Disease Control.

[FR Doc. 90-13213 Filed 6-6-90; 8:45 am]

BILLING CODE 4160-18-M

Cooperative Research and Development Agreement

AGENCY: Centers for Disease Control (CDC), Public Health Service, HHS.

ACTION: Notice.

SUMMARY: The Centers for Disease Control (CDC), Center for Environmental Health and Injury Control, Division of Environmental Health Laboratory Sciences, Toxicology Branch, announces the opportunity for potential collaborators to enter into a Cooperative Research and Development Agreement (CRADA) to evaluate and commercialize various chlorinated aromatic compounds as well as isotopically labeled compounds of environmental interest. These materials were prepared by CDC in response to the need to assess the public health importance of such compounds in humans and the human environment and consist of purified single compound standards, mixtures of various compounds, and crude synthetic mixtures. These materials are nonrenewable; a limited quantity is available. The recipient of this material will work with the CDC on product evaluation and marketing of these materials to laboratories.

It is anticipated that all inventions that may arise from this CRADA will be jointly owned with an option for an exclusive royalty-bearing license to the collaborator with which the CRADA is made. The CRADA will be executed for a 2-year period with the possibility of renewal for another 2-year period.

Because CRADAs are designed to facilitate the development of scientific and technological knowledge into useful, marketable products, a great deal of latitude is given to Federal agencies in implementing collaborative research. As a Federal agency, the CDC may accept staff, facilities, equipment, supplies, and money from the other participants in a CRADA; CDC may provide staff, facilities, equipment, and supplies to the project. The single restriction in this exchange is that CDC may not provide funds to the other participants in a CRADA.

SUPPLEMENTARY INFORMATION: This opportunity is available until 30 days after publication of this notice. Respondents may be provided an additional opportunity to furnish additional information if the CDC finds this necessary. For additional information contact:

Technical Contact(s): Donald Patterson, Jr., Ph.D. or Jim Holler, Ph.D., Toxicology Branch, Division of Environmental Health Laboratory Sciences, Center for Environmental Health and Injury Control, 1600 Clifton Road, NE., Mailstop F17, Atlanta, GA 30333, telephone (404) 488-4176.

Business Contact: Jim Holler, Ph.D., Toxicology Branch, Division of Environmental Health Laboratory Sciences, Center for Environmental Health and Injury Control, 1600 Clifton Road, NE., Mailstop F17, Atlanta, GA 30333, telephone (404) 488-4176.

Applicants will be judged according to the following criteria:

1. Adequacy of the overall approach based on the materials available in this program and respondents corporate capabilities: proposals are evaluated on the likelihood for the successful

distribution of these materials and their incorporation into the analytical measurement process;

2. Adequate documentation of previous successes including the scope of the projects undertaken, type of products or materials involved, collaborative partners (if applicable) and impact on the laboratory community;

3. Evidence of a safety program that is available for use in the agreement with CDC; appropriateness of the safety program for the proposed materials production or preparation, and its adequacy to protect individuals involved;

4. Evidence of a marketing approach to identify and reach potential customers, propose products and packaging, and propose other marketing features;

5. Evidence of a licensing agreement including proposed financial arrangements;

6. Adequacy of staff's technical capability to develop the desired materials in conjunction with CDC staff; and

7. Ability to develop, produce, market and support commercial products.

This CRADA is proposed and implemented under the 1986 Federal Technology Transfer Act: Public Law 99-502.

The responses must be made to:
R. Eric Greene, Technology Transfer Coordinator, Centers for Disease Control, 1600 Clifton Road, NE., Mailstop A20, Atlanta, GA 30333.

Dated: June 1, 1990.

Robert L. Foster,

Acting Director, Office of Program Support, Centers for Disease Control.

[FR Doc. 90-13214 Filed 6-6-90; 8:45 am]

BILLING CODE 4160-18-M

Food and Drug Administration

[Docket No. 90D-0160]

Premarket Testing Guidelines for Female Barrier Contraceptive Devices Also Intended to Prevent Sexually Transmitted Diseases; Availability

AGENCY: Food and Drug Administration HHS.

ACTION: Notice.

SUMMARY: The Food and Drug Administration (FDA) is announcing the availability of the draft guidance document "Premarket Testing Guidelines for Female Barrier Contraceptive Devices Also Intended to Prevent Sexually Transmitted Diseases." This draft guidance document addresses the preclinical and clinical testing of female barrier contraceptive devices also intended to prevent transmission of sexually transmitted diseases. FDA prepared this draft guidance document to expedite device study and evaluation for market release.

DATES: Coments by August 6, 1990.

ADDRESSES: Submit written requests for single copies of the draft guidance document "Premarket Testing Guidelines for Female Barrier Contraceptive Devices Also Intended to Prevent Sexually Transmitted Diseases" to the Dockets Management Branch (HFA-305), Rm. 4-62, 5600 Fishers Lane, Rockville, MD 20857. Comments and requests should be identified with the docket number found in brackets in the heading of this document. Send two self-addressed adhesive labels to assist the branch in processing your requests. After the comment period shown above, copies of the document will be available at cost from the Freedom of Information Staff (HFI-35), Food and Drug Administration, Rm. 12A-16, 5600 Fishers Lane, Rockville, MD 20857. The draft guidance document and received comments are available for public examination in the Dockets Management Branch between 9 a.m. and 4 p.m., Monday through Friday.

FOR FURTHER INFORMATION CONTACT: Lillian L. Yin, Center for Devices and Radiological Health (HFZ-470), Food and Drug Administration, 1390 Piccard Dr., Rockville, MD 20850, 301-437-1180.

SUPPLEMENTARY INFORMATION: This draft guidance document addresses the preclinical and clinical testing of female barrier contraceptive devices also intended to prevent transmission of sexually transmitted diseases (STD's), including acquired immunodeficiency syndrome (AIDS). The draft guidance document was developed on August 25, 1989, at an open public meeting of the Obstetrics-Gynecology Devices Panel (the Panel) as a collaborative effort of experts from FDA, the National Institute of Child Health and Human Development, the Centers for Disease Control, and the Panel, involving substantial interactive dialogue with the public audience, as well.

FDA prepared this draft guidance document to expedite device study and evaluation for market release because of the profound detrimental effect of human immunodeficiency virus and AIDS on the public health and the general need for this type of device in the marketplace.

The draft guidance document tends to be general because of the diversity of devices of this generic type. A manufacturer should develop study protocols specific to its device with the help of these draft guidelines. During the premarket approval application review process, FDA will evaluate the study protocol(s) for individual contraceptive devices on a case-by-case basis.

The material(s) and design of the new barrier contraceptive device should be thoroughly studied prior to beginning any clincial studies. Results from the clinical studies must support the safety and effectiveness of the new barrier contraceptive device, i.e., its risks or undesirable side effects and its effectiveness in preventing pregnancy and transmission of STD's, leading ultimately to a risk-benefit assessment.

Interested persons may submit to the Dockets Management Branch (address above) written comments on or before August 6, 1990. Comments will be considered in determining if changes to the draft guidance document are warranted. Two copies of any comments should be submitted except that individuals may submit one copy.

Dated: May 31, 1990.

Ronald G. Chesemore,

Associate Commissioner for Regulatory Affairs.

[FR Doc. 90-13208 Filed 6-6-90; 8:45 am]

BILLING CODE 4160-01-M

Health Care Financing Administration

[IOA-025-N]

Medicare and Medicaid Programs; Meeting of the Advisory Council on Social Security

AGENCY: Health Care Financing Administration (HCFA), HHS.

ACTION: Notice of public meeting.

SUMMARY: In accordance with section 10(a) of the Federal Advisory Committee Act, this notice announces a meeting of the Advisory Council on Social Security.

DATES: The meeting will be open to the public on June 11, 1990 from 12 noon to 9 p.m.; and, on June 12, 1990, from 9 a.m. to 5 p.m.

ADDRESSES: The meeting will be held at the Sheraton Crystal City Hotel, 1800 Jefferson Davis Highway, Arlington, Virginia 22202, (703) 486-1111.

FOR FURTHER INFORMATION CONTACT: Olga Nelson, Administrative Officer, Advisory Council on Social Security, room 638-G, Hubert H. Humphrey Building, 200 Independence Avenue, SW., Washington, DC 20201, (202) 245-0217.

SUPPLEMENTARY INFORMATION:

I. Purpose

Under section 706 of the Social Security Act, the Secretary of Health and Human Services appoints an Advisory Council on Social Security every four years. The Advisory Council examines issues affecting the Social Security retirement, disability and survivors insurance programs, as well as the Medicare and Medicaid programs, which were created under the Social Security Act.

In addition, Secretary Sullivan has asked the Advisory Council specifically to address the following:

—The adequacy of the Medicare program to meet the health and long-term care needs of our aged and disabled populations, the impact on Medicaid of the current financing structure for long-term care, and the need for more stable health care financing for the aged, the disabled, the poor, and the ininsured;

—Major Old-Age, Survivors, and Disability Insurance (OASDI) financing issues, including the long-range financial status of the program, relationship of OASDI income and outgo to budget-deficit reduction efforts under the Balanced Budget and Emergency Deficit Control Act of 1985, and projected buildups in the OASDI trust funds; and

Broad policy issues in Social Security, such as the role of Social Security in overall U.S. retirement incomes policy.

The Council is composed of 12 members: G. Lawrence Atkins, Robert M. Ball, Phillip Briggs, Lonnie R. Bristow, Theodore Cooper, John T. Dunlop, Karen Ignagni, James R. Jones, Paul O'Neill, A.L. "Pete" Singleton, John J. Sweeney, and Don C. Wegmiller; and the Chair, Deborah Steelman. The Council is to report to the Secretary and Congress by January 1, 1991.

II. Agenda

The Council will discuss critical issues related to health care financing reforms. The Council will also discuss the long-term role of Social Security and issues and options related to bringing the Social Security Program into long-term financial balance.

The agenda items are subject to change as priorities dictate.

(Catalog of Federal Domestic Assistance Programs Nos. 13.714 Medical Assistance Program; 13.773 Medicare—Hospital Insurance; 13.774 Medicare—Supplementary Medical Insurance; 13.802, Social Security-Disability Insurance; 13.803 Social Security-Retirement Insurance; 13.805 Social Security-Survivor's Insurance)

Dated: May 31, 1990.

Ann LaBelle,

Executive Director, Advisory Council on Social Security.

[FR Doc. 90-13333 Filed 6-6-90; 8:45 am]

BILLING CODE 4120-01-M

Health Resources and Services Administration

Final Definitions, Review Criteria, Funding Priorities and Special Consideration for Grants for Model Education Projects for Health Professions

The Health Resources and Services Administration (HRSA) announces final definitions, review criteria, funding priorities, and special consideration for Grants for Model Education Projects for Health Professions authorized under the authority of section 788(b) of the Public Health Service Act, as amended by Public Law 100-607.

Section 788(b) of the Public Health Service Act authorizes grants to any accredited health professions institution or any other public or private nonprofit entity located in a State for the development and implementaion of model education projects for health professions, including allied health, in areas such as faculty and curriculum development, and development of new clinical training sites.

Projects supported under this program may be diverse in nature to the extent that they fall within the statutory purpose of section 788(b), as described above. Examples include model projects pertaining to:

(1) Educational outcomes;

(2) Development of new clinical training sites;

(3) Faculty development;

(4) Teaching techniques;

(5) Cross-discipline curriculum development; and

(6) Information science.

The regulations codified at 42 CFR part 57, subpart NN apply to grants awarded under section 788(b).

Statutory Funding Preference

In determining the order of funding of competing applications which have been recommended for approval, a funding preference will be given to:

Applications from schools of medicine, osteopathic medicine, dentistry, veterinary medicine, optometry, pharmacy, podiatric medicine, public health, chiropractic, allied health, and graduate programs at public and nonprofit private schools in health administration and clinical psychology. By statute, at least 75 percent of the funds appropriated under the authority of section 788(b) must go to health professions institutions and allied health institutions.

Proposed definitions, review criteria, funding priorities and special consideration were published in the **Federal Register** on March 30, 1990 (FR 12023) for public comment. No comments were received during the 30-day comment period. Therefore, as proposed, the definitions, review criteria, funding priorities and special consideration will be retained as follows:

Final Definitions

Allied health professional is one as defined in section 701(13) of the Public Health Service Act.

Clinical training site means a distinct facility, or unit of a distinct facility, in which inpatient or outpatient health services are provided and in which health professions trainees and providers may receive basic or continuing education during the provision of those services.

Faculty development means the systematic training of faculty to increase their competence in teaching skills and in other areas related to academic responsibilities.

Accredited health professions institutions means schools of medicine, dentistry, osteopathic medicine, pharmacy, optometry, podiatric medicine, veterinary medicine, public health, and chiropractic, as defined in section 701(4) of the Act, and schools of allied health as defined in section 701(10) of the Act, which are located in States as defined in section 701(11) of the Act and which are accredited as provided in section 701(5) of the Act. The term also includes a "graduate program in health administration" and a "graduate program in clinical psychology" as defined in section 701(4) of the Act.

Model education project means a project that exists for the purpose of designing and implementing an educational model or prototype which can be applied to multiple settings, disciplines, and institutions.

Final Review Criteria

The HRSA will review applications taking into consideration the following factors:

(1) The degree to which the proposed project adequately responds to the intent of section 788(b);

(2) The extent to which the rationale and specific objectives of the project are based upon a well-documented needs assessment of the issue(s) to be addressed;

(3) The extent to which the rationale and objectives of the project are innovative in nature;

(4) The ability of the project protocol to result in educational models which can be used for multiple disciplines in a variety of institutional settings and which can be evaluated for their effectiveness;

(5) The adequacy of educational facilities and clinical training settings to accomplish the objectives as stated;

(6) The adequacy of organizational arrangements involving health professions institutions and other organizations necessary to carry out the project;

(7) The adequacy of the qualifications and experience of the project director and staff in the pertinent professional areas;

(8) The administrative and managerial ability of the applicant to carry out the proposed project in a cost-effective manner;

(9) The adequacy of the evaluation strategy to assess the project effectiveness and outcomes and its impact on trainees, if applicable; and

(10) The potential of the project to continue on a self-sustaining basis.

Final Funding Priorities for Fiscal Year 1990

Funding priority will be given to the following:

(1) Applications which emphasize outcome measurements for health professions education to assist health professions schools in the evaluation of faculty effectiveness and instructional methodology.

(2) Applications which emphasize alternative approaches for selecting or developing new clinical training sites for students, residents or practitioners.

(3) Applications incorporating a sensitivity to the needs of special populations and geographic areas (such as multicultural or ethnic elderly, rural and other underserved geographic areas, physically and emotionally disabled, substance abusers, needs of persons with HIV/AIDS infection, and the chronically ill) and curricular changes responding to new drugs and advanced therapies for treating or managing these conditions.

(4) Applications emphasizing computer technology and information transfer in teaching or health care delivery.

Final Special Consideration for Fiscal Year 1990

Special consideration will be given to applications for investigator-initiated projects that will involve two or more disciplines.

This program is listed at 13.190 in the Catalog of Federal Domestic Assistance. It is not subject to the provisions of Executive Order 12372, Intergovernmental Review of Federal Programs (as implemented through 45 CFR part 100).

Dated: June 1, 1990.

Robert G. Harmon,

Administrator.

[FR Doc. 13210 Filed 6-6-90; 8:45 am]

BILLING CODE 4160-15-M

National Institutes of Health

National Eye Institute (NEI); Meeting of the National Advisory Eye Council (NAEC)

Pursuant to Public Law 92-463, notice is hereby given of the meeting of the NAEC, NEI, June 14, 1990, Building 31C, Conference room 6, National Institutes of Health, Bethesda, Maryland.

The NAEC will be open to the public from 8:30 a.m. until approximately 11:30 a.m. on Thursday, June 14. Following opening remarks by the Director, NEI, there will be presentations by the staff of the Institute concerning Institute programs and various research assistance mechanisms. Attendance by the public at the open session will be limited to space available.

In accordance with provisions set forth in secs. 552b(c)(4) and 552b(c)(6), title 5, U.S.C. and section 10(d) of Public Law 92-463, the meeting of the NAEC will be closed to the public from approximately 11:30 a.m. until adjournment on June 14 for the review, discussion and evaluation of individual grant applications. These applications and the discussions could reveal confidential trade secrets or commercial property such as patentable material, and personal information concerning individuals associated with the applications, the disclosure of which would constitute a clearly unwarranted invasion of personal privacy.

Ms. Lois DeNinno, Committee Management Officer, National Eye Institute, Building 31, room 6A08, National Institutes of Health, Bethesda, Maryland 20892, (301) 496-9110, will provide a summary of meeting, roster of committee members, and substantive program information upon request.

(Catalog of Federal Domestic Assistance Programs, Nos. 13.867, Retinal and Choroidal Diseases; 13.868, Anterior Segment Diseases Research; and 13.871, Strabismus, Amblyopia and Visual Processing; National Institutes of Health)

Dated: May 30, 1990.

Betty J. Beveridge,

Committee Management Officer, NIH.

[FR Doc. 90-13296 Filed 6-6-90; 8:45 am]

BILLING CODE 4140-01-M

DEPARTMENT OF HOUSING AND URBAN DEVELOPMENT

Office of the General Counsel

[Docket No. D-90-920; FR-2842-D-01]

Complaint Processing Procedure; Delegation of Authority to Regional Counsel Under the Fair Housing Act

AGENCY: Office of the General Counsel, HUD.

ACTION: Notice of delegation of authority.

SUMMARY: 24 CFR part 103 contains the complaint processing procedure under title VIII of the Civil Rights Act of 1968 (the Fair Housing Act). Section 103.400(a) requires the General Counsel to determine whether reasonable cause exists to believe that a discriminatory housing practice has occurred or is about to occur following the completion of HUD's investigation of the complaint, if the parties have not entered into a conciliation agreement under § 103.310. If reasonable cause is found, the General Counsel must immediately issue a charge under § 103.405 on behalf of the aggrieved person, and notify the aggrieved persons and the respondent of this determination by certified mail or personal service. (24 CFR 103.400(a)(1)(i)). If the General Counsel determines that no reasonable cause exists the General Counsel is required to: issue a short and plain written statement of the facts upon which the General Counsel has based the no reasonable cause determination; dismiss the complaint; notify the aggrieved person and respondent of the dismissal (including the written statement of facts); and make public disclosure of the dismissal. (24 CFR 103.400(a)(1)(ii)). If the General Counsel determines that the matter involves the legality of any State or local zoning or land use law or ordinance, the General Counsel, in lieu of making a determination regarding reasonable cause, must refer the investigative materials to the Attorney General for appropriate action under section 814(b)(1) of the Fair Housing Act, and must notify the aggrieved person and the respondent of this action by certified mail or personal service. (24 CFR 103.400(a)(2)).

This notice delegates certain authority for functions in 24 CFR 103.400(a) described below from the General Counsel to the ten Regional Counsel. The delegation includes all complaints for which the Assistant Secretary or his or her designee has recommended a no reasonable cause determination, except for complaints which involve: (1) An

allegation of discrimination on the basis of familial status where the reasonable cause determination would require a conclusion as to whether the housing is exempt as housing for older persons; (2) the application of a restriction regarding the maximum number of persons permitted to occupy a dwelling; (3) an allegation of discrimination based on handicap where the reasonable cause determination would require a conclusion regarding reasonable accommodation or modification, or the design and construction requirements (see 24 CFR part 100, subpart D); (4) the legality of any State or local zoning or other land use law or ordinance; (5) the Department named as a respondent; and (6) an initiation by the Secretary. The Regional Counsel are delegated the following authority for covered complaints filed within their respective regions: (1) To review complaints to determine if no reasonable cause exists to believe that a discriminatory housing practice has occurred or is about to occur; (2) to make a determination, in appropriate cases, that no reasonable cause exists with respect to such complaints; (3) to issue a short and plain written statement of the facts upon which the Regional Counsel has based the no reasonable cause determination; (4) to dismiss the complaints based on the no reasonable cause determination; (5) to notify the aggrieved person and the respondent of the dismissal (including the written statement of facts); and (6) to make public disclosure of the dismissal.

Where a complaint involves complex facts or novel issues of law, Regional Counsel may consult with the Office of General Counsel concerning fact issues and, as a result, may refer the complaint to the Office of General Counsel for determination.

EFFECTIVE DATE: July 1, 1990.

FOR FURTHER INFORMATION CONTACT: Karen A. Osterloh, Office of the General Counsel, Room 9238, Department of Housing and Urban Development, 451 Seventh Street, SW., Washington, DC 20410. Telephone (202) 708-0570. (This is not a toll-free number.) The toll-free TDD number is 1-800-755-4505.

DELEGATION OF AUTHORITY: The delegation includes all complaints for which the Assistant Secretary or his or her designee has recommended a no reasonable cause determination, except for complaints which involve: (1) An allegation of discrimination on the basis of familial status where the reasonable cause determination would require a conclusion as to whether the housing is exempt as housing for older persons; (2) the applications of a restriction regarding the maximum number of persons permitted to occupy a dwelling; (3) an allegation of discrimination based on handicap where the reasonable cause determination would require a conclusion regarding reasonable accommodation or modification, or the design and construction requirements (see 24 CFR Part 100, Subpart D); (4) the legality of any State or local zoning or other land use law or ordinance; and (5) the Department named as a respondent; and (6) an initiation by the Secretary. With respect to covered complaints, the General Counsel delegates to the ten Regional Counsel, the authority:

1. To review complaints to determine if reasonable cause exists to believe that a discriminatory housing practice has occurred or is about to occur;
2. To determine that no reasonable cause exists with respect to such complaints;
3. To issue a short and plain written statement of the facts upon which the Regional Counsel has based the no reasonable cause determination;
4. To dismiss the complaint based on the no reasonable cause determination;
5. To notify the aggrieved person and the respondent of the dismissal (including the written statement of facts); and
6. To make public disclosure of the dismissal.

Where a complaint involves complex facts or novel issues of law, Regional Counsel may consult with the Office of General Counsel concerning fact issues and, as a result, may refer the complaint to the Office of General Counsel for determination.

Dated: May 14, 1990.

Frank Keating,

General Counsel.

[FR Doc. 90-13151 Filed 6-6-90; 8:45 am]

BILLING CODE 4210-01-M

Office of Administration

[Docket No. N-90-3095]

Submission of Proposed Information Collections to OMB

AGENCY: Office of Administration, HUD.

ACTION: Notices.

SUMMARY: The proposed information collection requirements described below have been submitted to the Office of Management and Budget (OMB) for review, as required by the Paperwork Reduction Act. The Department is soliciting public comment on the subject proposals.

ADDRESSES: Interested persons are invited to submit comment regarding these proposals. Comments should refer to the proposal by name and should be sent to: Scott Jacobs, OMB Desk Officer, Office of Management and Budget, New Executive Office Building, Washington, DC 20503.

FOR FURTHER INFORMATION CONTACT: David S. Cristy, Reports Management Officer, Department of Housing and Urban Development, 451 7th Street, SW., Washington, DC 20410, telephone (202) 708-0050.

This is not a toll-free number. Copies of the proposed forms and other available documents submitted to OMB may be obtained from Mr. Cristy.

SUPPLEMENTARY INFORMATION: The Department has submitted the proposals for the collections of information, as described below, to OMB for review, as required by the Paperwork Reduction Act (44 U.S.C. chapter 35).

The Notices list the following information: (1) The title of the information collection proposal; (2) the office of the agency to collect the information; (3) the description of the need for the information and its proposed use; (4) the agency form number, if applicable; (5) what members of the public will be affected by the proposal; (6) how frequently information submissions will be required; (7) an estimate of the total numbers of hours needed to prepare the information submission including number of respondents, frequency of response, and hours of response; (8) whether the proposal is new or an extension, reinstatement, or revision of an information collection requirement; and (9) the names and telephone numbers of an agency official familiar with the proposal and of the OMB Desk Officer for the Department.

AUTHORITY: Section 3507 of the Paperwork Reduction Act, 44 U.S.C. 3507; section 7(d) of the Department of Housing and Urban Development Act, 42 U.S.C. 3535(d).

Dated: May 31, 1990.

John T. Murphy,

Director, Information Policy and Management Division.

Submission of Proposed Information Collection to MOB

Proposal: Proposed Rule to Revise Regulations for the Allocation of Housing Assistance Funds in 24 CFR 791-204, FR-1896-P-03.

Office: Housing.

Description of the Need for the Information and its Proposed Use: Section 791-204 allows local governments to comment on applications submitted to the

Department for housing assistance and to comment on their consistency with the city's Housing Assistance Plan.

Form Number: None.

Respondents: State or Local Governments.

Frequency of Submission: On Occasion.

Reporting Burden:

	Number of respondents	×	Frequency of response	×	Hours per response	=	Burden hours
Information Collection							
Section 202 Program	140		1		2		280
Section 8 Certificates and Vouchers	240		1		2		480

Total Estimated Burden Hours: 760.

Status: New.

Contact: John Field, HUD, (202) 426-0751. Scott Jacobs, OMB, (202) 395-6880.

Date: May 31, 1990.

Proposal: Notice to Proceed.

Office: Publice and Indian Housing.

Description of the Need for the Information and its Proposed Use: The Notice to Proceed is the official PHA order directing the contractor to commence construction on a public housing project. It establishes the date the construction starts, the number of days for construction completion, the date of completion, and the name of project contracting officer.

Form Number: None.

Respondents: State or Local Governments and Non-Profit Institutions.

Frequency of Submission: On Occasion.

Reporting Burden:

	Number of respondents	×	Frequency of response	×	Hours per response	=	Burden hours
Annual Reporting	111		1		.25		27.5
Recordkeeping	111		1		.25		27.5

Total Estimated Burden Hours: 55.

Status: Reinstatement.

Contact: William Thorson, HUD (202) 755-6460. Scott Jacobs, OMB, (202) 395-6880.

Date: May 31, 1990.

[FR Doc. 90-13148 Filed 6-6-90; 8:45 am]

BILLING CODE 4210-01-M

[Docket No. N-90-3096]

Submission of Proposed Information Collection to OMB

AGENCY: Office of Administration, HUD.

ACTION: Notice.

SUMMARY: The proposed information collection requirement described below has been submitted to the Office of Management and Budget (OMB) for review, as required by the Paperwork Reduction Act. The Department is soliciting public comments on the subject proposal.

ADDRESS: Interested persons are invited to submit comments regarding this proposal. Comments should refer to the proposal by name and should be sent to: Scott Jacobs, OMB Desk Officer, Office of Management and Budget, New Executive Office Building, Washington, DC 20503.

FOR FURTHER INFORMATION CONTACT: David S. Cristy, Reports Management Officer, Department of Housing and Urban Development, 451 7th Street, SW., Washington, DC 20410, telephone (202) 708-0050.

This is not a toll-free number. Copies of the proposed forms and other available documents submitted to OMB may be obtained from Mr. Cristy.

SUPPLEMENTARY INFORMATION: The Department has submitted the proposal for the collection of information, as described below, to OMB for review, as required by the Paperwork Reduction Act (44 U.S.C. Chapter 35).

The Notice lists the following information: (1) The title of the information collection proposal; (2) the office of the agency to collect the information; (3) the description of the need for the information and its proposed use; (4) the agency form number, if applicable; (5) what members of the public will be affected by the proposal; (6) how frequently information submissions will be required; (7) an estimate of the total numbers of hours needed to prepare the information submission including number of respondents, frequency of response, and hours of response; (8) whether the proposal is new or an extension, reinstatement, or revision of an information collection requirement; and (9) the names and telephone numbers of an agency official familiar with the proposal and of the OMB Desk Officer for the Department.

Authority: Section 3507 of the Paperwork Reduction Act, 44 U.S.C. 3507; Section 7(d) of the Department of Housing and Urban Development Act, 42 U.S.C. 3535(d).

Dated: May 30, 1990.

John T. Murphy,

Director, Information Policy and Management Division.

Proposal: Survey of formaldehyde levels in manufactured homes.

Office: Housing.

Description of the Need for the Information and Its Proposed Use: This request to survey formaldehyde levels in manufactered homes will monitor emission levels in 150 manufactured homes constructed since February 11, 1985, the effective date of the Department's formaldehyde control requirements for polywood and particleboard panels.

Form Number: None.

Respondents: Individuals or households.

Frequency of Submission: On occasion.

Reporting Burden:

	Number of respondents	×	Frequency of response	×	House per response	=	Burden hours
Survey							
Initial testing	100		1		1.5		150
Followup testing	50		2		1.5		150
On site field monitoring	200		.25		2		100

Total Estimated Burden Hours: 400.
Status: New.
Contact: Richard A. Mendlen, HUD, (202) 708-1920; Scott Jacobs, OMB, (202) 395-6880.

Date: May 30, 1990.

[FR Doc. 90-13149 Filed 6-6-90; 8:45 am]
BILLING CODE 4210-01-M

Office of the Assistant Secretary for Fair Housing and Equal Opportunity

[Docket No. D-90-919; FR-2797-D-01]

Revocation of Authority to Award and Administer Discretionary Assistance Awards Under the Community Housing Resource Board Program

AGENCY: Office of the Assistant Secretary for Fair Housing and Equal Opportunity, HUD.

ACTION: Notice of revocation of authority.

SUMMARY: By notice published January 29, 1988 (53 FR 2647), the Assistant Secretary for Fair Housing and Equal Opportunity, as the Administrator of the Community Housing Resource Board Program, redelegated to the Regional Administrators-Regional Housing Commissioners and the Regional Directors of Fair Housing and Equal Opportunity the authority to award and administer cooperative agreements and grants under the Community Housing Resource Board Program. Today's notice revokes that redelegation.

EFFECTIVE DATE: May 29, 1990.

FOR FURTHER INFORMATION CONTACT: Florence L. Maultsby, Director, Office of Voluntary Compliance, Office of Fair Housing and Equal Opportunity, room 5244, Department of Housing and Urban Development, 451 Seventh Street, SW., Washington, DC 20410. Telephone (202) 708-2007. (This is not a toll-free number.)

SUPPLEMENTARY INFORMATION: By notice published January 29, 1988 (53 FR 2647), the Assistant Secretary for Fair Housing and Equal Opportunity redelegated the authority to award and administer cooperative agreements and grants, and to make related decisions, under the Fair Housing Assistance Program for Type I-noncompetitive funding and the Community Housing Resource Board Program, to the Regional Administrators-Regional Housing Commissioners and HUD Regional Directors of Fair Housing and Equal Opportunity. This notice revokes that part of the redelegation of authority which pertains to the Community Housing Resource Board Program because HUD has decided to centralize the CHRB program for policy guidance. The authority to award and administer cooperative agreements and grants under the Community Housing Resource Board Program (24 CFR part 120) is now retained by the Assistant Secretary for Fair Housing and Equal Opportunity. The remainder of the redelegation of authority pertaining to the Fair Housing Assistance Program for Type I-noncompetitive funding continues in effect.

Revocation of Authority

The authority redelegated to the Regional Administrators-Regional Housing Commissioners and HUD Regional Directors of Fair Housing and Equal Opportunity to award and administer cooperative agreemetns and grants under the Community Housing Resource Board Program (24 CFR part 120) which was published in the **Federal Register** on January 29, 1988, at 53 FR 2647, is revoked.

Authority: Section 7(d), Department of Housing and Urban Development Act (42 U.S.C. 3535(d)).

Dated: May 29, 1990.

Gordon Mansfield,
Assistant Secretary for Fair Housing and Equal Opportunity.

[FR Doc. 90-13152 Filed 6-6-90; 8:45 am]
BILLING CODE 4210-28-M

DEPARTMENT OF THE INTERIOR

Bureau of Land Management

[OR-014-84-6810-02: GPO-267]

Lakeview District Multiple Use Advisory Council Tour and Meeting

AGENCY: Bureau of Land Management, Interior.

ACTION: Notice of a date for a meeting and tour of the Lakeview District Multiple Use Advisory Council.

SUMMARY: The Lakeview District Multiple Use Advisory Council will be meeting on June 28 and 29. A tour is planned for June 28 which will highlight forestry issues in the Klamath Falls Resource Area. The tour will leave the Klamath Falls Resource Area Office at 2795 Anderson, #25 at 10 a.m. The Council will reconvene at 8 a.m., June 29 at the Klamath Falls Resource Area Office for presentations, discussion and possible recommendations on guidelines for future fire rehabilitation in the Lakeview District.

The public is invited to attend the meeting and/or the tour, but must notify the Lakeview District Office by June 24, 1990 so transportation arrangements can be made.

FOR FURTHER INFORMATION CONTACT:
Reneee Snyder, Public Affairs Officer, Lakeview District.
Bureau of Land Management, P.O. Box 151, 1000 South Ninth Street, Lakeview, OR 97630, (503) 974-6110.

Judy Ellen Nelson,
District Manager.

[FR Doc. 90-13190 Filed 6-6-90; 8:45 am]
BILLING CODE 4310-33-M

[CO-050-4212-13]

Realty Action; Fremont, CO

AGENCY: Bureau of Land Management, Interior.

ACTION: Notice of realty action addressing a proposal to exchange private land for public land in Fremont County, Colorado.

SUMMARY: The following described private land has been offered to the BLM:

Sixth Principal Meridian

T. 16 S., R. 68 W.,
Sec. 22: E½, E½W½;
Sec. 23: SW¼NW¼, W½SW¼.
T. 17 S., R. 68 W.,
Sec. 17: NE¼.
Totaling 760 acres in Fremont County.

In exchange the following described public land has been selected by the proponent:

Sixth Principal Meridian

T. 17 S., R. 68 W.,
Sec. 11: SE¼SW¼, SW¼SE¼;

Sec. 21: NW¼SE¼;
Sec. 27: SW¼;
Sec. 28: NE¼SE¼;
Sec. 34: N½NW¼, SW¼NW¼.
Totaling 440 acres in Fremont County.

The purpose of the exchange is to consolidate public ownership in the area of Beaver Creek Wilderness Study Area and to exchange inaccessible public land for accessible private land.

DATES: Comments will be accepted until July 23, 1990.

ADDRESS: Known interested parties will be mailed a notice on this proposal. All persons may submit comments to the BLM District Manager at P.O. Box 2200, Canon City, Colorado 81215–2200.

FOR FURTHER INFORMATION CONTACT: David Hallock, BLM, Royal Gorge Resource Area, (719) 275–0631.

SUPPLEMENTARY INFORMATION: The public land being disposed of lies west of State Highway 115, ten miles northeast of Penrose, Colorado, and near Table Mountain and Patton Canyon. The private land being acquired is in two parcels, one near the main entrance to the Beaver Creek State Wildlife Area ten miles north of Penrose, Colorado, and the second, adjacent to the east fork of Beaver Creek on the Fremont/Teller county line.

The publication of this notice segregates the public lands described above from the public land laws, including the mining laws, but not from exchange pursuant to section 206 of the Federal Land Policy and Management Act of 1976, for a period of 2 years from the date of first publication.

Donnie R. Sparks,
District Manager.

[FR Doc. 90-13193 Filed 6-6-90; 8:45 am]

BILLING CODE 4310-JB-M

[NV-930-00-4212-18]

Realty Action; Sale of Public Lands in Clark County, NV

Public Law 96–586, enacted December 23, 1980, authorizes and directs the sale of certain public lands in and around Las Vegas, Nevada. The following described lands have been determined to be suitable for sale utilizing competitive procedures, at not less than fair market value. The lands will not be offered for sale until 60 days after publication of this notice in the **Federal Register.**

Parcel No.	Serial No.	Legal description	Acres
		T. 20 S., R. 60 E., Section 4	
81-01	N-33501	NE¼NE¼SW¼SW¼	2.50
81-02	N-33502	NW¼NW¼ SW¼SW¼.	2.50
81-03	N-33503	SE¼NW¼SW¼SW¼	2.50
81-04	N-33504	SE¼SW¼SW¼SW¼	2.50
81-05	N-33505	NW¼NE¼SE¼SW¼	2.50
		T. 20, S., R. 60 E., Section 9	
81-07	N-33507	N½NW¼NE¼NE¼	5.00
81-09	N-33509	E½SE¼NE¼NE¼	5.00
81-11	N-33511	SE¼SE¼NW¼NE¼	2.50
81-12	N-33512	SW¼NE¼NW¼NE¼	2.50
81-13	N-33513	NE¼NW¼NW¼NE¼	2.50
81-14	N-33514	NE¼NE¼NE¼NW¼	2.50
81-15	N-33515	SW¼NW¼NE¼, W½SE¼ NW¼NE¼.	15.00
81-16	N-33516	SW¼SE¼NE¼NW¼	2.50
81-17	N-33517	N½SW¼NE¼NW¼	5.00
81-18	N-33518	SE¼NE¼NW¼NW¼ , SW¼NW¼ NE¼NW¼.	5.00
81-19	N-33519	N½NE¼NW¼NW¼	5.00
81-21	N-33521	S½NW¼NW¼NW¼, N½SW¼ NW¼NW¼.	10.00
81-22	N-33522	S½SE¼NW¼NW¼	5.00
81-23	N-33523	NW¼NE¼ SW¼NW¼.	2.50
81-24	N-33524	W½NW¼SW¼NW¼	5.00
81-25	N-33525	N½SW¼SW¼NW¼	5.00
81-26	N-33526	S½NE¼SW¼NW¼, SE¼SW¼NW¼.	15.00
81-27	N-33527	W½NW¼SE¼NW¼	5.00
81-28	N-33528	SE¼NW¼SE¼NW¼, NE¼SW¼ SE¼NW¼.	5.00
81-29	N-33529	S½NE¼SE¼NW¼	5.00
81-30	N-33530	NE¼SE¼SE¼NW¼	2.50
81-31	N-33531	NW¼NW¼ SW¼NE¼.	2.50
81-32	N-33532	SW¼NE¼SW¼NE¼	2.50
81-33	N-33533	N½SW¼SW¼NE¼	5.00
81-34	N-33534	NE¼SE¼SW¼NE¼	2.50
81-35	N-33535	SE¼NE¼SE¼NE¼, NE¼SE¼ SE¼NE¼.	5.00
81-36	N-33536	S½SE¼SE¼NE¼	5.00
81-37	N-33537	E½NE¼NE¼SE¼, SW¼NE¼ NE¼SE¼, N½NE¼SE¼NE¼ SE¼, SW¼NE¼ SE¼NE¼SE¼, NW¼SE¼ NE¼SE¼.	11.87
81-39	N-33539	SE¼SW¼SW¼NE¼, SW¼SE¼ SW¼NE¼.	5.00
81-40	N-33540	E½SW¼NW¼SE¼ W½SE¼ NW¼SE¼.	10.00
81-41	N-33541	SW¼NW¼ NW¼SE¼, NW¼SW¼ NW¼SE¼.	5.00
81-42	N-33542	NE¼NE¼SW¼, N½SE¼NE¼SW¼.	15.00
81-43	N-33543	S½SW¼SE¼NW¼	5.00
81-44	N-33544	NE¼NE¼NW¼SW¼	2.50
81-46	N-33546	NW¼SE¼ NW¼SW¼.	2.50
81-47	N-33547	S½NW¼NW¼SW¼, N½SW¼ NW¼SW¼.	2.50
81-48	N-33548	SW¼SW¼ NW¼SW¼.	2.50
81-49	N-33549	NW¼NE¼ SW¼SW¼, NE¼NW¼ SW¼SW¼SW¼.	5.00
81-50	N-33550	NW¼NW¼ SE¼SW¼.	2.50
81-59	N-33559	NE¼NE¼SW¼SE¼, NW¼NW¼ SE¼SE¼.	5.00
81-60	N-33560	SE¼SW¼NE¼SE¼, SW¼SE¼ NE¼SE¼.	5.00
90-01	N-52693	N½NW¼NW¼NW¼	5.00
90-02	N-52694	E½SE¼NE¼NW¼	5.00
90-03	N-52695	SE¼NW¼NW¼NE¼	2.50
90-04	N-52696	SW¼SE¼NE¼	10.00
90-05	N-52697	E¼NW¼NW¼SE¼	5.00
90-06	N-52698	N½SW¼NE¼SE¼	5.00
		T2T. 20 S., R. 60 E., Section 28	
81-77	N-33577	W½SW¼NE¼NE¼	5.00
81-88	N-33588	E½NE¼SE¼NW¼	5.00
81-89	N-33589	W½SE¼SE¼NW¼	5.00
81-90	N-33590	W½SW¼SE¼NW¼	5.00
90-08	N-52789	W½W½NE¼NW¼, E½NW¼NW¼; E½W½NW¼NW¼.	40.00
90-09	N-52790	E½NE¼NW¼, E½NW¼ NE¼NW¼.	25.00
90-10	N-52791	E½SE¼NW¼	5.00
90-11	N-52792	W½SW¼SW¼SW¼	5.00
90-12	N-52793	W½SE¼SW¼SW¼	5.00
90-13	N-52794	E½SE¼SW¼SW¼	5.00
90-14	N-52795	E½SW¼SE¼SW¼	5.00
		T2T. 20 S., R. 60 E., Section 33	
83-17	N-38107	Lot 16	5.00
83-18	N-38108	Lot 19	5.00
83-19	N-38109	Lot 36	5.00
83-21	N-38111	Lot 52	5.00
83-22	N-38112	Lot 55	5.00
90-07	N-52788	Lots 65, 66 and 67	3.75
84-26	N-39215	Lot 60	5.00
84-27	N-39216	Lot 61	5.00
		T2T. 21 S., R. 60 E., Section 3	
81-101	N-33601	Lot 114	5.35
		T2T. 21 S., R. 60 E., Section 4	
82-139	N-36739	Lot 12	5.53
82-142	N-36742	Lot 57	5.19
		T2T. 21 S., R. 60 E., Section 24	
82-156	N-36756	W½NE¼SW¼NW¼, NW¼SW¼NW¼, W½SW¼ SW¼NW¼.	20.00
		T2T. 20 S., R. 60 E., Section 25	
82-157	N-36757	E½SW¼SE¼SE¼, W½SE¼SE¼SE¼.	10.00

These parcels, situated in the Las Vegas Valley, have potential for urban-suburban, commercial and industrial development. Transfer of this land from Federal ownership will facilitate local land use planning and enhance its compatibility with adjoining private land uses. All or portions of the subject land herein described will be offered for sale in Las Vegas on August 15, 1990.

The parcels not sold through the initial sale may be offered using procedures to be outlined at a later day by the Bureau of Land Management's Las Vegas District Office.

Conveyance of the available mineral interests will occur simultaneously with the sale of the land. The mineral interests being offered for conveyance have no known mineral value. A bid will constitute an application for conveyance of those mineral interests offered on the parcel. The declared high bidder will be required to deposit 15% of the full bid price and a $50.00 nonreturnable filing fee for conveyance of the mineral interests immediately at the sale. Failure to deposit these sums will result in disqualification as the high bidder. The authorized officer shall then determine whether to accept the next highest bid, withdraw the lands from market, or reoffer them at a later date.

General terms and conditions of the sale are:

1. The land will be sold subject to all valid existing rights such as power transmission and telephone line easements and federally issued oil and gas leases.

2. The land will be sold subject to reservations for streets, roads, flood control and public utilities, both existing and proposed, in accordance with Clark County and the City of Las Vegas plans.

3. All land that is sold will be subject to applicable Clark County and City Las Vegas ordinances.

4. Any development and proposed development of a parcel affected by the 100-year flood plain shall be subject to review and regulations by Clark County Department of Public Works, Flood Control Division for flood control and storm water management.

5. The United States shall reserve to itself all known mineral deposits on all parcels being offered: together with the right to prospect for, mine and remove the minerals. A more detailed description of this reservation, which will be incorporated in the patent document, is available for review at the Las Vegas District Office, 4765 W. Vegas Drive, P.O. Box 26569, Las Vegas, Nevada 89126.

6. The United States reserves to itself a right-of-way for ditches and canals, Act of August 30, 1890, 26 Stat. 391; 43 U.S.C. 945.

Adjoining landowners have no preference rights. Only U.S. citizens and legally chartered U.S. Corporations are eligible to purchase these lands. Specific information regarding the time and site of the sale and procedures will be published in a brochure and made available to the public prior to the sale. The Bureau of Land Management may accept or reject any and all offers, or withdraw any lands or interest in land from sale if, in the opinion of the authorized officer, consummation of the sale would not be fully consistent with FLPMA or other applicable laws.

Publication of this notice in the **Federal Register** segregates the public lands from the operation of the public land laws and the mining laws. The segregative effect will end upon issuance of a patent or 270 days from the date of the publication, whichever occurs first.

For a period of 45 days from the date of publication of this notice in the **Federal Register**, interested parties may submit comments to the District Manager, Las Vegas District, P.O. Box 26569, Las Vegas, Nevada 89126. Objections will be reviewed by the State Director who may sustain, vacate, or modify this realty action. In the absence of any objections, this realty action will become the final determination of the Department of the Interior.

Dated: June 1, 1990.

Gary Ryan,

Acting District Manager, Las Vegas, NV.

[FR Doc. 90-13217 Filed 6-6-90; 8:45 am]

BILLING CODE 4310-HC-M

[UT-942-00-4212-13; U-63244]

Issuance of Land Exchange Conveyance Document; Utah

AGENCY: Bureau of Land Management, Interior.

ACTION: Exchange of public and private land.

SUMMARY: This action informs the public of the conveyance of 160.26 acres of public land out of Federal ownership. This action will also open 185 acres of reconveyed land to surface entry. The reconveyed land has been and will remain open to the United States mining laws and mineral leasing.

FOR FURTHER INFORMATION CONTACT: Michael Barnes, BLM Utah State Office, 324 South State Street, P.O. Box 45155, Salt Lake City, Utah 84145-0155, 801-539-4119.

SUPPLEMENTARY INFORMATION: 1. The United States has issued an exchange conveyance document to James Trees, for the following described land under section 206 of the Federal Land Policy and Management Act of 1976, 90 Stat. 2756, 43 U.S.C. 1716:

Salt Lake Meridian, Utah

T. 42 S., R. 10 W.,
Sec. 3, N½SW¼;
Sec. 10, Lots 1 and 2.

The area described contains 160.26 acres in Washington County.

2. In exchange for this land, the United States acquired the surface estate of the following described land.

Salt Lake Meridian, Utah

T. 42 S., R. 9 W.,
Sec. 29, S½NE¼SW¼, E½NE¼SW¼SW¼, SE¼SW¼SW¼, SE¼SW¼, S½NW¼SE¼, SW¼NE¼SE¼, S½SE¼.

The area described contains 185.00 acres in Washington County.

3. At 7:45 a.m., on July 9, 1990. The land described in paragraph 2 will be open to the operation of the public land laws generally subject to valid existing rights, the provisions of existing withdrawals, and the requirements of applicable law. All valid applications received at or prior to 7:45 a.m., on the date stated above, will be considered as simultaneously filed at that time. Those received thereafter will be considered in the order of filing.

4. The appraised value of both the public and private land transferred was equal at $44,000 each.

James M. Parker,

State Director.

[FR Doc. 90-13189 Filed 6-6-90; 8:45 am]

BILLING CODE 4310-DQ-M

[NM-940-00-4730-12]

Filing of Plats of Survey; New Mexico

May 31, 1990.

The plats of survey described below are on open file in the New Mexico State Office, Bureau of Land Management (BLM), Santa Fe, New Mexico, pending official filing. Effective at 10 a.m. on July 10, 1990, these plats will be officially filed.

A dependent resurvey of the Second Standard Parallel North through Range 14 West, a portion of the east boundary, and the subdivisional lines, and the subdivision of Section 12, Township 8 North, Range 14 West, New Mexico Principal Meridian, for Group No. 746 NM. This survey was requested by the Director, Bureau of Indian Affairs (BIA), Albuquerque, New Mexico.

A dependent resurvey of portions of the Fifth Standard Parallel North, in Range 10 East (North boundary), a portion of the west boundary, portions of the subdivisional lines, certain small holding claim boundaries, and certain lot boundaries in Sections 5 and 7, and the survey of certain lot boundaries in Sections 4, 5, 6, 7, and 17, Township 20 North, Range 9 East, New Mexico Principal Meridian, for Group No. 781 NM. This survey was requested by the

District Manager, Albuquerque District Office, Bureau of Land Management (BLM), Albuquerque, New Mexico.

A dependent resurvey of the north boundary of Township 30 North, Range 15 West and the survey of the west and north boundaries and the subdivisional lines of Township 31 North, Range 15 West, New Mexico Principal Meridian, for Group No. 851 NM. This survey was requested by the Superintendent, Ute Mountain Agency, BIA.

A dependent resurvey of a portion of the Second Standard Parallel South through Range 6 West, a portion of the east boundary, and a portion of the subdivisional lines, the subdivision of Sections 2 and 14, and the survey of lots is Section 2, Township 11 South, Range 6 West, New Mexico Principal Meridian, for Group No. 877 NM. This survey was requested by the District Manager, Las Cruces District Office, Las Cruces, New Mexico.

The supplemental plat showing new lottings in Section 33, Township 21 North, Range 10 East, New Mexico Principal Meridian, New Mexico. This plat was requested by the District Manager, Albuquerque District Office, (BLM) Albuquerque, New Mexico.

The supplemental plat showing new lottings in the northeast ¼ of Section 12, Township 20 North, Range 9 East, New Mexico Principal Meridian, New Mexico. This plat was requested by the District Manager, Albuquerque District Office, Bureau of Land Management (BLM), Albuquerque, New Mexico.

These plats will be in the open files of the New Mexico State Office, Bureau of Land Management, P.O. Box 1449, Sante Fe, New Mexico 87504–1449. Copies may be obtained from this office upon payment of $2.50 per sheet.

John P. Bennett,

Chief, Branch of Cadastral Survey.

[FR Doc. 90–13195 Filed 6–6–90; 8:45 am]

BILLING CODE 4310-FB-M

INTERNATIONAL TRADE COMMISSION

[Investigation No. 332-292]

California Pesticide Residue Initiative: Probable Effects on U.S. International Trade in Agricultural Food Products

AGENCY: International Trade Commission.

ACTION: Institution of investigation.

SUMMARY: Following receipt on May 10, 1990, of a request from the United States Trade Representative (USTR), the Commission instituted investigation No. 332–292, under section 332(g) of the Tariff Act of 1930 (19 U.S.C. 1332(g)) for the purpose of providing information with respect to the following:

(1) The extent to which enactment of the "California Environmental Protection Act of 1990" (Initiative) could create major differences between California and Federal standards for chemical residues in food;

(2) The volume and value, by country of origin, of agricultural fresh and processed food products imported through the ports of California, and the volume and value, by country of origin, of the imported agricultural fresh and processed food products marketed in California;

(3) The volume and value, by country of destination, of agricultural fresh and processed food products exported through the ports of California, and the volume and value, by country of destination, of California agricultural fresh and processed food products which are exported; and

(4) The potential international trade effects which would flow from enactment of the Initiative.

As requested by the USTR, the Commission will submit an interim report not later than September 30, 1990, and a final report not later than December 31, 1990.

EFFECTIVE DATE: May 29, 1990.

FOR FURTHER INFORMATION CONTACT: Stephen Burket (202–252–1318) or David Ingersoll (202–252–1309), Agriculture Division, Office of Industries, U.S. International Trade Commission. Hearing-impaired persons can obtain information on this study by contacting our TDD terminal on (202) 252–1810.

Public Hearing

A public hearing in connection with this investigation will be held beginning at 9:30 a.m. on July 10, 1990, at the U.S. International Trade Commission Building, 500 E Street, SW., Washington, DC. All persons have the right to appear by counsel or in person, to present information, and to be heard. Requests to appear at the hearing should be filed in writing with the Secretary, United States International Trade Commission, 500 E Street SW., Washington, DC 20436, not later than the close of business (5:15 p.m.) on June 26, 1990. The deadline for filing prehearing briefs (original and 14 copies) is July 3, 1990. The deadline for filing post hearing briefs is the close of business on July 24, 1990.

Written Submissions

Interested persons may submit written statements concerning the investigation. To be assured of consideration, written statements (original plus 14 copies) must be received by the close of business (5:15 p.m.) on July 24, 1990. Commercial or financial information that a submitter desires the Commission to treat as confidential must be submitted on separate sheets of paper, each clearly marked "Confidential Business Information" at the top. All submissions requesting confidential treatment must conform to the requirements of section 201.6 of the Commission's *Rules of Practice and Procedure* (19 CFR 201.6). All written submissions, except for confidential business information, will be made available for inspection by interested persons. All submissions should be addressed to the Secretary at the Commission's office in Washington, DC.

Issued: May 30, 1990.

By order of the Commission.

Kenneth R. Mason,

Secretary.

[FR Doc. 90–13156 Filed 6–6–90; 8:45 am]

BILLING CODE 7020-02-M

INTERSTATE COMMERCE COMMISSION

[Docket No. AB-3 (Sub. 91X)]

Missouri Pacific Railroad Company—Abandonment Exemption—In Tulsa and Osage Counties, OK

AGENCY: Interstate Commerce Commission.

ACTION: Notice of exemption.

SUMMARY: The Commission exempts from the prior approval requirements of 49 U.S.C. 10903–10904 the abandonment by Missouri Pacific Railroad Company of 35.99 miles of rail line between milepost 152.01, near Tulsa, to the end of the line at milepost 188.0, near Barnsdall in Tulsa and Osage Counties, OK, subject to environmental and standard labor protective conditions.

DATES: Provided no formal expression of intent to file an offer of financial assistance has been received, this exemption will be effective on July 7, 1990. Formal expressions of intent to file an offer [1] of financial assistance under 49 CFR 1152.27(c)(2) must be filed by June 18, 1990, petitions to stay must be filed by June 22, 1990, and petitions for reconsideration must be filed by July 2, 1990.

Requests for a public use condition must be filed by June 18, 1990.

ADDRESSES: Send pleadings referring to Docket No. AB–3 (Sub-No. 91X) to:

(1) Office of the Secretary, Case Control Branch, Interstate Commerce Commission, Washington, DC 20423. and

[1] *See Exempt. of Rail Abandonment—Offers of Finan. Assist.*, 4 I.C.C.2d 164 (1987).

(2) Petitioner's representative: Joseph D. Anthofer, 1416 Dodge Street, Omaha, NE. 68179.

FOR FURTHER INFORMATION CONTACT: Joseph H. Dettmar (202) 275-7245. [TDD for hearing impaired: (202) 275-1721].

SUPPLEMENTARY INFORMATION: Additional information is contained in the Commission's decision. To purchase a copy of the full decision, write to, call, or pick up in person from: Dynamic Concepts, Inc., room 2229, Interstate Commerce Commission Building, Washington, DC 20423. *Telephone:* (202) 289-4357/4359. [Assistance for the hearing impaired is available through TDD service (202) 275-1721.]

Decided: May, 25, 1990.

By the Commission, Chairman Philbin, Vice Chairman Phillips, Commissioners Simmons, Lamboley, and Emmett. Commissioner Lamboley concurred in the result. Vice Chairman Phillips commented with a separate expression.

Noreta R. McGee,

Secretary.

[FR Doc. 90-13266 Filed 6-6-90; 8:45 am]

BILLING CODE 7035-01-M

DEPARTMENT OF JUSTICE

Lodging of Consent Decree in United States v. CSX Transportation, Inc.

In accordance with Departmental policy, 28 CFR 50.7, and pursuant to section 122(i) of the Comprehensive Environmental Response, Compensation and Liability Act ("CERCLA") as amended by the Superfund Amendments and Reauthorization Act of 1986, 42 U.S.C. 9622(i), notice is hereby given that on May 17, 1990, a proposed Consent Decree in *United States* v. *CSX Transportation, Inc.*, was lodged with the United States District Court for the Southern District of Alabama. The Complaint in this case sought injunctive relief and cost recovery pursuant to sections 106 and 107 of CERCLA, 42 U.S.C. 9606 and 9607. The Complaint was filed on October 12, 1989, against CSX Transportation, Inc. ("CSX").

The site involved in the case consists of an area of groundwater contaminated with benzene that is located in Perdido, Alabama. The Complaint alleges that CSX caused the contamination when one of its trains derailed at the site in 1965, resulting in the spilling of 7,775 gallons of benzene. The proposed Consent Decree provides that CSX will pay $708,638.77 to the United States as reimbursement for its past costs incurred in connection with the site and implement the remedy that was selected for the site by EPA Region IV in its Record of Decision ("ROD") dated September 30, 1988. Specifically, the proposed groundwater extraction, treatment and reinjection system at the site until cleanup levels specified in the ROD are attained. Once those levels are reached, groundwater monitoring will continue for five years.

In exchange for performing this work, the Decree provides CSX a covenant not to sue from the United States for any claims under CERCLA sections 106 and 107, 42 U.S.C. 9606 and 9607, and section 7003 of the Resource Conservation Recovery Act ("RCRA"), 42 U.S.C. 6973.

The Department of Justice will receive, for a period of thirty (30) days from the date of this publication, comments relating to the proposed Consent Decree. The Department of Justice will consider any comments in determining whether or not to consent to the proposed settlement and may withdraw its consent to the proposed settlement if such comments disclose facts or considerations which indicate that the proposed Consent Decree is inappropriate, improper or inadequate. Comments should be addressed to the Assistant Attorney General, Land and Natural Resources Division, U.S. Department of Justice, Washington, DC 20530, and should refer to *United States* v. *CSX Transportation, Inc.*, DOJ Ref. No. 90-11-3-439.

The proposed Consent Decree may be examined at the Office of the United States Attorney for the Southern District of Alabama, 113 St. Joseph Street, Mobile, Alabama 36602 and at the Office of the Regional Counsel, Environmental Protection Agency, 345 Courtland Street, NE., Atlanta, Georgia 30365. Copies of the proposed Consent Decree may be obtained in person or by mail from the Environmental Enforcement Section, Land and Natural Resources Division, room 1647, Department of Justice, 9th Street and Pennsylvania Avenue, NW., Washington, DC 20530. In requesting a copy, please enclose a check in the amount of $7.50 payable to the Treasurer of the United States.

Richard B. Stewart,

Assistant Attorney General, Land and Natural Resources Division.

[FR Doc. 90-13196 Filed 6-6-90; 8:45 am]

BILLING CODE 4410-10-M

Lodging of Consent Decree; United States v. General Electric

In accordance with Departmental policy, 28 CFR 50.7, 38 FR 19029, and section 122(d) of the Comprehensive Environmental Response, Compensation and Liability Act (CERCLA), 42 U.S.C. 9622(d), notice is hereby given that on May 18, 1990, a proposed consent decree in *United States* v. *General Electric Company*, Civil Action No. 90-CV-575, was lodged with the United States District Court for the Northern District of New York. The decree resolves certain claims under CERCLA, 42 U.S.C. 9601, et seq., of the United States against the General Electric Company (the "defendant") for injunctive relief and for recovery of response costs related to the Hudson River PCBs Site (the Site) located in the State of New York. In the proposed consent decree, the defendants agree to implement the in-place containment remedial action selected by the Environmental Protection Agency (EPA) to address hazardous substances contamination at the Site. In addition, the decree requires the defendants to reimburse the United States for all of EPA's oversight costs for the remedy.

The proposed decree may be examined at the Office of the United States Attorney for the Northern District of New York, 369 Federal Building, 100 South Clinton Street, Syracuse, New York 13260; at the Region II Office of Regional Counsel, Environmental Protection Agency, 26 Federal Plaza, New York, New York 10278, contact: Paul Simon, Esq.; and at the Environmental Enforcement Section, Environment and Natural Resources Division of the United States Department of Justice, room 1515, 10th and Pennsylvania Avenue NW., Washington, DC 20530. In requesting copies, please enclose a check in the amount of $6.10 (10 cents per page reproduction charge) payable to the Treasurer of the United States. The Department of Justice will receive written comments relating to the proposed consent decree for a period of thirty (30) days from the date of this notice. Comments should be addressed to Assistant Attorney General, Environment and Natural Resources Division, Department of Justice, Washington, DC 20530, and should refer to *United States* v. *General Electric Company*, Civil Action No. 90-CV-575 (N.D.N.Y.), D.J. Reference No. 90-11-2-424.

Richard B. Stewart,

Assistant Attorney General, Environment and Natural Resources Division.

[FR Doc. 90-13197 Filed 6-6-90; 8:45 am]

BILLING CODE 4410-01-M

DEPARTMENT OF LABOR

Office of the Secretary

Senior Executive Service; Appointment of Member to the Performance Review Board

Title 5 U.S.C. 4314(c)(4) provides that Notice of the appointment of an individual to serve as a member of the Performance Review Board of the Senior Executive Service shall be published in the Federal Register.

The following individual is hereby appointed to a three-year term, effective May 14, 1990: Linda R. Anku.

FOR FURTHER INFORMATION CONTACT: Mr. Larry K. Goodwin, Director of Personnel Management, room C-5526, Department of Labor, Frances Perkins Building, Washington, DC 20210, Telephone Number (202) 523-6551.

Signed at Washington, DC, this 30th day of May 1990.

Elizabeth Dole,

Secretary of Labor.

[FR Doc. 90-13224 Filed 6-6-90; 8:45 am]

BILLING CODE 4510-23-M

Employment and Training Administration

Determinations Regarding Eligibility to Apply for Worker Adjustment Assistance; Besly Products Corp. et al.

In accordance with section 223 of the Trade Act of 1974 (19 USC 2273) the Department of Labor herein presents summaries of determinations regarding eligibility to apply for adjustment assistance issued during the period of May 1990.

In order for an affirmative determination to be made and a certification of eligibility to apply for adjustment assistance to be issued, each of the group eligibility requirements of section 222 of the Act must be met.

(1) That a significant number of proportion of the workers in the workers' firm, or an appropriate subdivision thereof, have become totally or partially separated,

(2) That sales or production, or both, of the firm or subdivision have decreased absolutely, and

(3) That increases of imports of articles like or directly competitive with articles produced by the firm or appropriate subdivision have contributed importantly to the separations, or threat thereof, and to the absolute decline in sales or production.

Negative Determinations

In each of the following cases the investigation revealed that criterion (3) has not been met. A survey of customers indicated that increased imports did not contribute importantly to worker separations at the firm.

TA-W-24,173; Besly Products Corp., Greenfield, MA

TA-W-24,119; Crown Store & Equipment Company of Virginia, Inc., New Castle, VA

TA-W-24,217; Protofino Sportswear, Inc., New York, NY

TA-W-24,192; Stelwood, Inc., Harriman, TN

TA-W-24,193; Stelwood, Inc., Rockwood, TN

TA-W-24,131; Playskool, Inc., Lancaster, PA

TA-W-24,186; Lady Hope, Kulpmont, PA

TA-W-24,166; T&T Industries, Inc., Eagle Pass, TX

In the following cases, the investigation revealed that the criteria for eligibility has not been met for the reasons specified.

TA-W-24,207; Witco Corp., Humko Chemical Div., Newark, NJ

Increased imports did not contribute importantly to workers separations at the firm.

TA-W-24,113; A.O. Smith Electrical Products Co., Tipp City, OH

The investigation revealed that criterion (2) has not been met. Sales or production did not decline during the relevant period as required for certification.

TA-W-24,216; Nu-Car Carriers, Inc., Edison, NJ

The workers' firm does not produce an article as required for certification under Section 222 of the Trade Act of 1974.

TA-W-24,265; Oil Producers Association, Springfield, IL

The workers' firm does not produce an articles as required for certification under Section 222 of the Trade Act of 1974.

TA-W-23,967; Eastman Kodak Co., Inc., Kodak Colorado Div., Windsor, CO

Increased imports did not contribute importantly to workers separations at the firm.

TA-W-24,172; Anchor Fasteners, Waterbury, CT

Increased imports did not contribute importantly to workers separations at the firm.

TA-W-24,198; William Prym, Inc., Dayville, CT

The investigation revealed that criterion (2) has not been met. Sales or production did not decline during the relevant period as required for certification.

TA-W-24,203; Blackstone Webbing Co., Inc., Pawtucket, RI

Increased imports did not contribute importantly to workers separations at the firm.

TA-W-24,179; Galeton Products Co., Flash Department, Galeton, PA

Increased imports did not contribute importantly to workers separations at the firm.

TA-W-24,187; Lynden Transport, Inc., Broussard, LA

The workers' firm does not produce an article as required for certification under Section 222 of the Trade Act of 1974.

TA-W-24,136; Tec-Con Contractors, Inc., East Orange, NJ

The workers' firm does not produce an article as required for certification under Section 222 of the Trade act of 1974.

TA-W-24,243; Corning, Inc., Erwin Ceramics Plant, Corning, NY

The investigation revealed that criterion (2) has not been met. Sales or production did not decline during the relevant period as required for certification.

TA-W-24,199; Aileen, Inc., Woodstock, VA

The investigation revealed that criterion (1) has not been met. A significant number or proportion of the workers did not become totally or partially separated as required for certification.

TA-W-24,195; The Timken Co., Canton, OH

The investigation revealed that criterion (1) and criterion (2) has not been met. Sales or production did not decline during the relevant period as required for certification. A significant number or proportion of the workers did not become totally or partially separated as required for certification.

Affirmative Determinations

TA-W-24,220; Senjay Knitting Mills, Inc., Brooklyn, NY

A certification was issued covering all workers separated on or after March 16, 1989.

TA-W-24,200; Aileen, Inc., Flint Hill, VA

A certification was issued covering all workers separated on or after March 19, 1989.

TA-W-24,204; Boos Indiana Wood, Evansville, IN

A certification was issued covering all workers separated on or after March 23, 1989.

TA-W-24,185; Jersey Made Fashion, Hoboken, NJ

A certification was issued covering all workers separated on or after March 1, 1989 and before July 26, 1989.

TA-W-24,196; Thorn EMI Electron Tubes, Inc, Fairfield, NJ

A certification was issued covering all worker separation on or after March 13, 1989.

TA-W-24,189; Rayman, Inc., Newark, NJ

A certification was issued covering all workers separated on or after March 12, 1989 and before December 31, 1989.

TA-W-24,171; Aris Fashions, Inc., Newark, NJ

A certification was issued covering all workers separated on or after March 12, 1989 and before December 31, 1989.

TA-W-24,122; General Electric Power Delivery & Controls, Pittsfield, MA

A certification was issued covering all workers separated on or after February 26, 1989.

TA-W-24,180; Harris Graphics Corp., Dover, NH

A certification was issued covering all workers separated on or after February 27, 1989.

TA-W-24,151; GAMM II, Inc., Bethel, ME

A certification was issued covering all workers separated on or after March 2, 1989 and before April 2, 1990.

TA-W-24,077; Washington Forge, Inc., Englishtown, NJ

A certification was issued covering all workers separated on or after February 14, 1989.

TA-W-24,252; General Electric Co., Carroll, IA

A certification was issued covering all workers separated on or after April 15, 1990.

TA-W-24,162; PGI Seis Pros, Inc., Headquartered in Billings, MT & Operating At Various Locations In The Following States:

TW—W—24,162A; CO
TW—W—24,162B; MI
TW—W—24,162C; MT
TW—W—24,162D; ND
TW—W—24,162E; WY

A certification was issued covering all workers separated on or after March 6, 1989.

TA-W-24,191; Sprague Electric Co., Test & Assembly Dept., Willow Grove, PA

A certification was issued covering all workers separated on or after February 21, 1989.

TA-W-24,148; Fairchild Aircraft Corp, San Antonio, TX

A certification was issued covering all workers separated on or after March 1, 1989.

TA-W-24,148A; Crestview Aerospace Corp., Crestview, FL

A certification was issued covering all workers separated on or after March 1, 1989.

TA-W-24,194; Takata/Gateway Occupant Safety Systems, Inc., Michigan City, IN

A certification was issued covering all workers separated on or after March 16, 1989.

TA-W-24,348; Pacific Brands Footwear, Fenton, MO

A certification was issued covering all workers separated on or after April 18, 1989 and before May 24, 1990.

TA-W-24,222; Shellcraft Industries, Inc., Winooski, VT

A certification was issued covering all workers separated on or after January 1, 1990.

TA-W-24,078; Zambelli Internationale, New Castle, PA

A certification was issued covering all workers separated on or after February 13, 1989.

TA-W-24,269; Robinson Drilling, Inc., Duncan, OK

A certification was issued covering all workers separated on or after September 1, 1989.

TA-W-24,188; Peterson Spring-Madison Heights Plant, Div of Peterson American Corp., Madison Heights, MI

A certification was issued covering all workers separated on or after March 23, 1989.

TA-W-24,146; Eaton Corp., Axle & Brake Div., Humbolt, TN

A certification was issued covering all workers separated on or after March 5, 1989.

TA-W-24,028; Loth Lumber, Forks, WA

A certification was issued covering all workers separated on or after February 6, 1989.

TA-W-24,360; Alps Coat, Paterson, NJ

A certification was issued covering all workers separated on or after April 18, 1989 and before October 30, 1989.

I hereby certify that the aforementioned determinations were issued during the month of May 1990. Copies of these determinations are available for inspection in room 6434, U.S. Department of Labor, 601 D Street, NW., Washington, DC 20213 during normal business hours or will be mailed to persons to write to the above address.

Dated: May 30, 1990.

Marvin M. Fooks,

Director, Office of Trade Adjustment Assistance.

[FR Doc. 90-13225 Filed 6-6-90; 8:45 am]

BILLING CODE 4510-30-M

Investigations Regarding Certifications of Eligibility To Apply for Worker Adjustment Assistance; American Electric et al.

Petitions have been filed with the Secretary of Labor under section 221(a) of the Trade Act of 1974 ("the Act") and are identified in the appendix to this notice. Upon receipt of these petitions, the Director of the Office of Trade Adjustment Assistance, Employment and Training Administration, has instituted investigations pursuant to section 221(a) of the Act.

The purpose of each of the investigations is to determine whether the workers are eligible to apply for adjustment assistance under title II, chapter 2, of the Act. The investigations will further relate, as appropriate, to the determination of the date on which total or partial separations began or threatened to begin and the subdivision of the firm involved.

The petitioners or any other persons showing a substantial interest in the subject matter of the investigations may request a public hearing, provided such request is filed in writing with the Director, Office of Trade Adjustment Assistance, at the address shown below, not later than June 18, 1990.

Interested persons are invited to submit written comments regarding the subject matter of the investigations to the Director, Office of Trade Adjustment Assistance, at the address shown below, not later than June 18, 1990.

The petitions filed in this case are available for inspection at the Office of the Director, Office of Trade Adjustment Assistance, Employment and Training Administration, U.S. Department of Labor, 601 D Street NW., Washington, DC 20213.

Signed at Washington, DC, this 29th day of May 1990.

Marvin M. Fooks,

Director, Office of Trade Adjustment Assistance.

APPENDIX

Petitioner (union/workers/firm)	Location	Date received	Date of petition	Petition number	Articles produced
American Electric (Workers)	St. Louis, MO	5/29/90	4/26/90	24,428	Electrical Connectors.
Anadarko Petroleum Corp. (Company)	Houston, TX	5/29/90	5/09/90	24,429	Oil and gas.
Apertus Corp. (Workers)	Eden Prairie, MN	5/29/90	5/02/90	24,430	Machines.
Arrow Co. (ACTWU)	Atlanta, GA	5/29/90	5/17/90	24,431	Mens' shirts.
Arthur Winer (ACTWU)	Gary, IN	5/29/90	5/17/90	24,432	Mens' and womens' slacks.
Bayly's (ACTWU)	Sanger, Ca	5/29/90	5/17/90	24,433	Shorts and bathing suits.
Bonwit Teller (Workers)	Philadelphia, PA	5/29/90	5/07/90	24,434	Garments.
Cardinal Drilling Co. (Workers)	Billings, MT	5/29/90	4/30/90	24,435	Oil and gas.
Delaware Luggage Co. (Workers)	Elkton, MD	5/29/90	5/10/90	24,436	Brief cases.
Fall River Co. (ACTWU)	Fall River, MA	5/29/90	5/17/90	24,437	Shirts.
Fidelity Sportwear—Leather Dept. (Workers)	Everett, MA	5/29/90	5/09/90	24,438	Outerwear.
Gates Energy Products (IBEW)	Gainesville, FL	5/29/90	5/14/90	24,439	Battery cells.
H&H Mfg., Co. (Company)	Statham, GA	5/29/90	5/16/90	24,440	Mens' pants.
Hood River Apparel, Inc. (Workers)	Hood River, OR	5/29/90	5/09/90	24,441	Mens' shirts and jackets.
IMO Industries, Inc. (USWA)	Trenton, NJ	5/29/90	5/11/90	24,442	Speed producer.
Inmos (Company)	Colorado Springs, CO	5/29/90	5/14/90	24,443	Computer components.
Kasco Corp. (Company)	Sussex, NJ	5/29/90	5/17/90	24,444	Saw blades.
Lake Shore, Inc. (USWA)	Marquette, MI	5/29/90	5/04/90	24,445	Deck equipment.
Litton Industrial Automation System (IAM)	N Britain, CT	5/29/90	5/03/90	24,446	Machines.

APPENDIX—Continued

Petitioner (union/workers/firm)	Location	Date received	Date of petition	Petition number	Articles produced
Marala Shingle & Shake Inc. (Company)	Sekin, WA	5/29/90	5/09/90	24,447	Shingles and shakes.
Meridian Mfg., Co. (Workers)	Meridian, MS	5/29/90	5/16/90	24,448	Robes and jogging suits.
Merrimaid Mfg.—Barre Div. (Workers)	Barre, VT	5/29/90	5/04/90	24,449	Jackets for sports.
PAR Technology Corp. (Company)	N. Hartford, NY	5/29/90	5/16/90	24,450	Sales registers.
Perrella Goves, Inc. (ACTWU)	Gloversville, NY	5/29/90	5/09/90	24,451	Gloves.
Plaskon Electronic Material, Inc. (UAW)	Toledo, OH	5/29/90	4/26/90	24,452	Electronic equipment.
Reeves Rubber, Inc. (Workers)	Albertville, AL	5/29/90	5/10/90	24,453	Sealing devices.
Rhode Island Lace Works (UTW)	Barrington, RI	5/29/90	5/14/90	24,454	Lace.
Robbins & Myers, Inc. (Workers)	Gallipolis, OH	5/29/90	5/03/90	24,455	Electric motors.
Smith & Nephew Perry (Company)	Columbus, GA	5/29/90	4/06/90	24,456	Gloves.
Sprague Electric Co. (Company)	Hillsville, VA	5/29/90	5/15/90	24,457	Capacitors.
Suits Drilling Corp. (Workers)	Enid, OK	5/29/90	5/15/90	24,458	Oil and gas.
Superior Drawn Steel, Co. (USWA)	Monaca, PA	5/29/90	5/15/90	24,459	Alloy bars and shapes.
Teresa Fashions, Inc. (ILGWU)	Hoboken, NJ	5/29/90	5/08/90	24,460	Ladies' coats and suits.
Tungsten Alloy Mfg. Co., Inc. (IUE)	Harrison, NJ	5/29/90	5/10/90	24,461	Carbide parts.
Turbine Support (IUE)	San Antonio, TX	5/29/90	5/10/90	24,462	Aircraft parts.
Uniroyal Goodwich (Workers)	Miami, OK	5/29/90	4/10/90	24,463	Tires.
Wood Texture, Inc. (Workers)	Edison, NJ	5/29/90	5/09/90	24,464	Furniture.

[FR Doc. 90-13226 Filed 6-6-90; 8:45 am]

BILLING CODE 4510-30-M

[TA-W-23,929]

Chrysler Corp. St. Louis #1 Fenton, MO; Affirmative Determination Regarding Application for Reconsideration

By a letter dated May 8, 1990, the United Auto Workers (UAW) requested administrative reconsideration of the Department of Labor's Notice of Negative Determination Regarding Eligibility to Apply for Worker Adjustment Assistance for workers and former workers of Chrysler Corporation's St. Louis #1, Fenton, Missouri assembly plant. The negative determination was issued on March 22, 1990 and was published in the **Federal Register** on April 10, 1990 (55 FR 13335).

The union claims that the LaBaron and Dodge Daytona automobiles produced at Fenton should be grouped under two different market segments when investigating for imports and lists Wards Automotive World, the Environmental Protection Agency and Chrysler as including them in distinct market segments.

Conclusion

After careful review of the application, I conclude that the claim is of sufficient weight to justify reconsideraton of the Department of Labor's prior decision. The application is, therefore, granted.

Signed at Washington, DC, this 29th day of May 1990.

Robert O. Deslongchamps,

Director, Office of Legislation and Actuarial Services, UIS.

[FR Doc. 90-13227 Filed 6-6-90; 8:45 am]

BILLING CODE 4510-30-M

Occupational Safety and Health Administration

[Docket No. NRTL-1-88]

Nationally Recognized Testing Laboratories; Etc.: MET Electrical Testing Company, Inc.

AGENCY: Occupational Safety and Health Administration, Department of Labor.

ACTION: Notice of expansion of current recognition as a nationally recognized testing laboratory.

SUMMARY: This notice announces the Agency's final decision on the MET Electrical Testing Company, Inc. application for expansion of its recognition as a Nationally Recognized Testing Laboratory (NRTL) under 29 CFR 1910.7.

FOR FURTHER INFORMATION CONTACT: James J. Concannon, Director, Office of Variance Determination, NRTL Recognition Program, Occupational Safety and Health Administration, U.S. Department of Labor, Third Street and Constitution Avenue, NW., room N3653, Washington, DC 20210.

SUPPLEMENTARY INFORMATION:

Notice of Final Decision

The MET Electrical Testing Company, Inc. (MET), previously made application pursuant to section 6(b) of the Occupational Safety and Health Act of 1970, (84 Stat. 1593, 29 U.S.C. 655), Secretary of Labor's Order No. 1-90 (55 FR 9033), and 29 CFR 1910.7, for recognition as a Nationally Recognized Testing Laboratory (see 53 FR 49258, 12/6/88), and was so recognized (see 54 FR 21136, 5/16/89).

MET subsequently applied for expansion of its current recognition as a Nationally Recognized Testing Laboratory pursuant to 29 CFR 1910.7. (see Exhibit 6.A.) A notice of MET's application together with a positive preliminary finding was published in the **Federal Register** on December 8, 1989 (54 FR 50663-64). (See Exhibit 5.) There was one response to this **Federal Register** notice (Exhibit 7-1.) which requested a thirty day delay in rendering a decision to allow the correspondent time to respond to the application. No further correspondence was received from the writer.

Notice is hereby given that MET's recognition as a Nationally Recognized Testing Laboratory has been expanded to include the test standards (product categories) listed below.

Copies of all pertinent documents (Docket No. NRTL-1-88), are available for inspection and duplication at the Docket Office, room N-2634, Occupational Safety and Health Administration, U.S. Department of Labor, Third Street and Constitution Avenue, NW., Washington, DC 20210.

The address of the concerned laboratory is: MET Electrical Testing Company, Inc., Laboratory Division, 916 West Patapsco Avenue, Baltimore, Maryland 21230.

Final Decision and Order

Based upon the facts found as part of the MET Electrical Testing Company, Inc. original recognition, including

details of necessary test equipment, procedures, and special apparatus or facilities needed, adequacy of the staff, the application(s) and documentation submitted by the applicant (see Exhibit 6.A.), the OSHA staff finding including the original On-Site Review Report, as well as the evaluation of the current request (see Exhibit 6.B.), OSHA finds that the MET Electrical Testing Company, Inc. has met the requirements of 29 CFR 1910.7 for expansion of its present recognition to test and certify certain equipment or materials.

Pursuant to the authority in 29 CFR 1910.7, the MET Electrical Testing Company, Inc. recognition is hereby expanded to include the two additional test standards (product categories) cited below, subject to the conditions listed below. This recognition is limited to equipment or materials which, under 29 CFR part 1910, require testing, listing, labeling, approval, acceptance, or certification by a Nationally Recognized Testing Laboratory. This recognition is limited to the use of the following two additional test standards for the testing and certification of equipment or materials included within the scope of these standards.

MET has stated that these standards are used to test equipment or materials which can be used in environments under OSHA's jurisdiction, and OSHA has determined that they are appropriate within the meaning of 29 CFR 1910.7(c).

ANSI/UL #913—Intrinsically Safe Apparatus and Associated Apparatus for Use in Class I, II, and III, Division 1, Hazardous Locations.

ANSI/UL #1261—Laboratory Equipment.

The MET Electrical Testing Company, Inc., must also abide by the following conditions of this expansion of its recognition, in addition to those already required by 29 CFR 1910.7:

This recognition does not apply to any aspect of any program which is available only to qualified manufacturers and is based upon the NRTL's evaluation and accreditation of the manufacturer's quality assurance program;

The Occupational Safety and Health Administration shall be allowed access to MET's facilities and records for purposes of ascertaining continuing compliance with the terms of its recognition and to investigate as OSHA deems necessary;

If MET has reason to doubt the efficacy of any test standard it is using under this program, it shall promptly inform the test standard developing organization of this fact and provide the organization with appropirate relevant information upon which its concerns are based;

MET shall not engage in or permit others to engage in any misrepresentation of the scope or conditions of its recognition. As part of this condition, MET agrees that it will allow no representation that it is either a recognized or an accredited Nationally Recognized Testing Laboratory (NRTL) without clearly indicating the specific equipment or material to which this recognition is tied, or that its recognition is limtied to certain products;

MET shall inform OSHA as soon as possible, in writing, of any change of ownership or key personnel, including details;

MET will continue to meet the requirements for recognition in all areas where it has been recognized; and

MET will always cooperate with OSHA to assure complaince with the letter as well as the spirit of its recognition and 29 CFR 1910.7.

Effective Date

This recognition will become effective on June 7, 1990, and will be valid for a period of five years form the date of the original recognition, May 16, 1989, until May 16, 1994, unless terminated prior to that date, in accordance with 29 CFR 1910.7.

Signed at Washington, DC, this 30th day of May, 1990.

Gerard F. Scannell,
Assistant Secretary.

[FR Doc. 90-13222 Filed 6-6-90; 8:45 am]
BILLING CODE 4510-26-M

[Docket No. NRTL-2-89]

American Gas Association Laboratories

AGENCY: Occupational Safety and Health Administration, Department of Labor.

ACTION: Notice of recognition as a nationally recognized testing laboratory.

SUMMARY: This notice announces the Agency's final decision on the American Gas Association Laboratories' application for recognition as a Nationally Recognized Testing Laboratory (NRTL) under 29 CFR 1910.7.

FOR FURTHER INFORMATION CONTACT: James J. Concannon, Director, Office of Variance Determination, NRTL Recognition Program, Occupational Safety and Health Administration, U.S. Department of Labor, Third Street and Constitution Avenue, NW., Room N3653, Washington, DC 20210.

SUPPLEMENTARY INFORMATION:

Notice of Final Decision

Notice is hereby given that the American Gas Association Laboratories, which made application for recognition pursuant to 29 CFR 1910.7, has been recognized as a Nationally Recognized Testing Laboratory for the equipment or material listed below.

The addresses of the laboratories covered by this recognition are:

American Gas Association Laboratories, Cleveland Laboratory, 8501 East Pleasant Valley Road, Independence (Cleveland), Ohio 44131; and

American Gas Association Laboratories, Los Angeles Branch Laboratory, 1425 Grade Vista Avenue, Los Angeles, California 90023.

Background:

The American Gas Association Laboratories (AGA Labs) were formed in 1925. In 1927, the Canadian Gas Association appointed the AGA Labs as its official testing laboratory. In 1928, the Cleveland, Ohio test facilities were dedicated, and two years later the Los Angeles Branch Laboratory was establsihed. In the early 1950s, two additional wings were added to the Cleveland facility. Finally, in 1969, the Cleveland Laboratory moved to its present facilities in Independence Ohio. To date, since 1925, AGA Labs states that more than 57,000 gas appliance designs have been certified under the AGA Blue Star certification seal program.

The American Gas Association Laboratories applied to OSHA for recognition as a Nationally Recognized Testing Laboratory in September 1988. The application was subsequently revised and additional data provided as requested. On-site evaluations were conducted [Exs. 2B(2) and 2C(2)], and the results were discussed with the applicant who responded with appropriate corrective actions and clarifications to recommendations made as a result of the survey of the Los Angeles Branch Laboratory [Ex. 2C(2)]. Final on-site review reports, consisting of the on-site evaluations of AGA Labs' testing facilities and administrative and technical practices and the corrective action taken by AGA Labs in response to these evaluations (Exs. 2B and 2C) and the OSHA staff recommendation, were subsequently forwarded to the Assistant Secretary for a preliminary finding on the application. A notice of AGA Labs' application together with a positive preliminary finding was published in the **Federal Register** on November 21, 1989 (54 FR 48166-48168).

Interested parties were invited to submit comments.

There were no response to the Federal Register notice of the AGA Labs application and preliminary finding (Docket No. NRTL-2-89). The Occupational Safety and Health Administration has evaluated the record in relation to the regulations set out in 29 CFR 1910.7 and makes the following findings:

Capability

Section 1910.7(b)(1) states that for each specified item of equipment or material to be listed, labeled or accepted, the testing laboratory must have the capability (including proper testing equipment and facilities, trained staff, written testing procedures, and calibration and quality control programs) to perform appropriate testing.

Based upon the on-site review reports and the products and standards in question, AGA Labs' two laboratories have adequate floor space for testing and evaluation and adequate numbers of technical and professional personnel to accomplish the services required for the present workload in the areas of recognition it seeks.

The Cleveland Laboratory occupies three buildings on a 33 acre site with more than 125,000 square feet of floor space, of which some 60,000 square feet is allocated to product testing and evalaution.

Natural gas, water, and electricity are available in the building used for product testing. The BTU content of the commercial natural gas used to test gas appliances is continuously monitored and the current value is prominently displayed in the test area. In addition to piping natural gas, butane, propane, and a butane/air mixture are piped to work stations within the test areas of the laboratory. The laboratory custom blends fuels for product testing when special heating values are required. Environmental conditions in the laboratory are controlled by a central heating, air conditioning and ventilation system designed for the type of testing performed in the laboratory. Temperature and humidity are closely controlled in rooms used for calibrating test instruments. There are two large "closed rooms" and several smaller environmental chambers which are used to control and monitor environmental conditions for specific product testing. The main entrance to the laboratory is monitored during normal working hours by a receptionist. Visitors are required to identify themselves and to sign in and sign out in a visitor's register log. Each visitor is issued an identification badge and is escorted when traveling through the facility. The facility has contract security personnel on the premises during non-working hours. The shipping and receiving, equipment storage, and research areas of the laboratory are protected from fire damage by a sprinkler system.

Of the Laboratory's more than 200 employees at this site, approximately 89 are involved in its Certification Program, as follows:

5—Front Office Personnel.
3—Managers, Certification.
1—Manager, Quality Assurance.
3—Section Supervisors, Inspection.
14—Certification Engineers.
2—Client Service Engineers, Inspection.
1—Administrative Coordinator, Inspection.
1—Scheduler, Inspection.
1—Supervisor, Training.
1—Manager, Equipment, Development and Calibration.
1—Engineer, Equipment, Development and Calibration.
17—Test Engineers.
15—Test Technicians.
7—Descriptionists.
11—Inspectors.
4—Equipment, Design and Calibration Personnel.

The Los Angeles Branch Laboratory, consisting of three buildings, is situated on 0.8 acres of land and provides 30,000 square feet of floor space, of which approximately 10,000 square feet is devoted to product testing and evaluation.

Natural gas, water, and electricity are available in the buildings used for product testing. A special holding tank dispenses a homogeneous natural gas mixture for testing gas-operated appliances. A 1000 cubic foot "closed room" is used for controlling and monitoring environmental conditions for specific product testing. The main entrance to the laboratory is monitored during normal working hours by a receptionist. Visitors are required to identify themselves and to sign a visitor's register log. The facility has a security alarm system that includes perimeter-intrusion and inside motion-detecting sensors. The security system is activated during non-working hours. Security procedures are posted on a bulletin board.

This Laboratory employs 23 persons engaged in product testing and evaluation in its Certification Program, as follows:

1—General Manager.
1—Manager, Inspection.
4—Senior Section Engineers.
8—Engineers.
1—Technician.
2—Draftspersons.
1—Draftsperson—Descriptionist.
5—Inspectors.

AGA Labs has submitted copies of the job responsibilities and qualifications for each of the technical positions listed above. The employees, in OSHA'S opinion, are qualified by training or experience to test in the areas for which AGA Labs seeks recognition.

AGA Labs has more than 825 items of test equipment for performing the testing required by the various test standards. This equipment is available in the laboratories for testing. More than 700 items are located at the Cleveland facility and the remaining items are at the Los Angeles laboratory. Any test equipment not available at the Los Angeles facility would be rented locally or borrowed from the Cleveland location as necessary.

The Cleveland laboratory maintains a separate calibration/repair laboratory within the facility. Gas flow meters are calibrated on site to a primary standard certified by the National Institute of Standards and Technology (NIST), formerly the National Bureau of Standards. An electronic test equipment standard is calibrated by an outside vendor and is traceable to NIST standards. Test equipment is calibrated periodically at intervals specified in AGA Lab's " Equipment Development and Calibration Guideline". New and repaired equipment is calibrated before use per the operating guidelines. Test equipment calibrated or repaired by an outside vendor is spot checked before use. Repair and calibration records of such equipment are maintained by the Manager, Equipment Development and Calibration. Labels are used to show the calibration status of test equipment. These labels indicate the date of last calibration and the next calibration due date. The Calibration Laboratory maintains a manual card file and a computer data base system for all test equipment.

The Los Angeles Laboratory calibrates its wet test meters on site. Electronic test equipment is calibrated by an outside vendor. The Calibration Program is the responsibility of the Supervisor of Equipment Development and Calibration, and establishes the intervals for periodic calibration of all test equipment. The maintenance of records and calibration status labeling is the same as that carried out by the Cleveland Laboratory. Also, as in Cleveland, calibration and reference standards are traceable to the NIST. A computerized data base sorted by calibration due date is maintained and reviewed weekly. In addition, the outside vendor notifies the Laboratory of equipment due to be calibrated the following month.

The Cleveland Laboratory has written "Product Certification Operating Guidelines", developed by the Department Managers, to document the standard operating procedures which laboratory personnel are to follow for certifying products. In addition, the "General Guidelines for the Certification Program" covers everything from application handling procedures and preparation to a procedure for preparing the test report and follow-up of "non-complying" test reports. The Director, Product Certification, is responsible for the overall administration of the Product Certification Operating Guidelines. Each guideline is audited annually by the Quality Assurance Manager. The general procedures for conducting the evaluation and testing of a product is incorporated into the laboratory's work order form. A Certification Engineer prepares the work order that specifies the testing to be performed on the product and verifies that the latest edition of the standard is used in the evaluation. This form tracks the completed evaluation, test and administrative steps in the investigation. The laboratory determines the appropriate standard to be used to evaluate a particular product and has a formal procedure to arbitrate disagreements between itself and the applicant.

The laboratory does not subcontract any of the testing required by the standards, although some testing may be carried out at the manufacturer's site. All product testing, nonetheless, is performed by laboratory personnel using test equipment where the calibration is traceable to NIST standards.

The Los Angeles Laboratory has developed operating guidelines for the investigation of products to a number of the test standards. The general procedures for conducting the evaluation and testing of a product is incorporated into the laboratory's work order form. This form tracks the completed evaluation, tests, and administrative steps in the investigation. The laboratory has operating procedures concerning the receipt, retention, and disposal of product samples submitted for test and evaluation. Test procedures specified in the test standards are used to perform product testing in the laboratory. Test procedures specific to the laboratory have been developed for a number of tests. Other procedures are being developed under the laboratory's training program. Policy decisions regarding the interpretation of standards and deviations from the tests specified in the standards are coordinated with the main office (Cleveland Laboratory).

The laboratory determines the appropriate standard(s) to be used to evaluate a particular product and has a formal procedure to arbitrate disagreements between itself and the applicant. This procedure is delineated in the contract with the client.

The laboratory does not subcontract any testing required by the standards. Products not able to be tested on site are sent to the Cleveland Laboratory.

In both laboratories, a test report is issued to the client after completion of the evaluation and testing of the product to the standard. The Los Angeles Laboratory sends a copy of this report to the main office with a listing sheet containing the information to be published in the Laboratory's listed products directory. Both laboratories maintain a test report file.

The Cleveland Laboratory maintains, and distributes a revised standards and other information about these standards to both its own laboratory personnel and to the Lost Angeles Laboratory soon after they are published. Superseded standards are archived for reference purposes.

At both facilities, the work orders are compared with the test data index to verify the completeness of the test records. The client receives copies of the test report and the descriptive data and is obligated to maintain these records at the manufacturing site for inspection by the Laboratory's follow-up inspection personnel.

The Cleveland laboratory has a Quality Assurance Manager who is responsible for the Follow-Up and Quality Assurance Program at that facility as well as oversight reponsibility at the Los Angeles facility. There are written "Certification Operating Guidelines" which are used at both sites. These encompass the assignment of specific quality assurance responsibilities for each functional area of operation, the requirement for at least an annual internal audit for each functional area conducted by persons independent of the area audited, the preparation of a Corrective Action Request, a status log, and the method of dispersal of copies of the completed audit report. This procedure is acceptable to OSHA.

Creditable Reports/Complaint Handling

Section 1910.7(b)(4) provides that an OSHA recognized NRTL must maintain effective procedures for producing creditable findings and reports that are objective and without bias. The laboratory, in order to be recognized, must also maintain effective procedures for handling complaints under a fair and reasonable system.

The AGA Labs application as well as the on-site review report indicate that the AGA Labs does maintain effective procedures for producing creditable findings and reports that are objective.

The procedures for handling complaints between the laboratory and a client is covered under the contract between the two parties. The Cleveland Laboratory has procedures used by both laboratories for handling complaints from members of the public and from inspection authorities. These procedures are acceptable to OSHA.

Type of Testing

The standard contemplates that testing done by NRTLs fall into one of two categories: testing to determine conformance with appropriate test standards, or experimental testing where there might not be one specific test standard covering the new product or material. AGA Labs has applied for recognition in the first category.

Follow-Up Procedures

Section 1910.7(b)(2) requires that the NRTL provide certain follow-up procedures to the extent necessary for the particular equipment or material to be listed, labeled, or accepted. These include implementation of control procedures for identifying the listed or labeled equipment or materials, inspecting the production run at factories to assure conformance with test standards, and conducting of field inspections to monitor and assure the proper use of the label.

The Laboratory has three Follow-Up Service Programs which it uses to verify that products continue to meet the requirements of the standard.

The "old" system, covering some 50 percent of the manufacturers presently listed, requires that at least one announced and one unannounced inspection be conducted at the manufacturing site each year for each representative model listed. The announced visit is a very extensive annual inspection of all of the manufacturer's products which were previously tested by AGA Labs. In addition, each representative model must be completely retested and recertified every five years. This system will remain in effect until June 30, 1991, to allow an orderly transition to the "new" system.

The "new" system requires that quarterly inspections be made at the manufacturing site. Three of the inspections are to be unannounced and samples of the listed products currently

in production are to be inspected and tested. A fourth inspection is announced so the manufacturer can make available to the inspector any representative models not inspected during the previous year. This program became mandatory as of January 1, 1988 for all new customers seeking certification for the first design of their products and, as indicated above, will be mandatory for all customers by July 1, 1991.

OSHA has determined that the proposed transition period to allow manufacturers which were customers of AGA Labs prior to January 1, 1988, to continue to be inspected on the basis of the "old" system, is reasonable and affords an adequate level of assurance of product conformance until the so-called "new" system is completely in effect on July 1, 1991.

This "new" system, under which all manufacturers will be inspected as of July 1, 1991, and based on quarterly inspections made on-site at the manufacturing site, is acceptable to OSHA for any products certified by AGA to be used in workplaces under OSHA's jurisdiction.

A third program, which will not be part of the American Gas Association Laboratories' OSHA/NRTL recognition, is available only to manufacturers which the applicant believes are qualified. This program requires that two inspections be conducted each year at the manufacturing site. Further, under this program which is documentation intensive, the laboratory evaluates and accredits the manufacturer's Quality Assurance Program.

A Standard Operating Procedural Manual is used by the Follow-Up Services groups in both facilities to conduct manufacturing site inspections. There are 11 full-time inspectors at the Cleveland facility, while the Los Angeles facility employs five full-time inspectors.

Each laboratory has a program for conducting field audits of listed products which utilizes its laboratory personnel, including follow-up inspectors. These audits are carried out to assure that the AGA Labs mark is being properly used.

OSHA is satisfied that the AGA Labs adequately meet the requirements of this section.

Independence

Section 1910.7(b)(3) requires that an NRTL be completely independent of employers subject to the tested equipment requirements and of any manufacturer or vendor of equipment or materials being tested. The applicant stated in its application that it is in complete compliance with this requirement.

The American Gas Association ("Association"), the parent body, is a nonprofit organization whose laboratories use the fees charged for testing and certification to offset the actual cost of rendering such services. The only members of the Association that are entitled to vote at annual and special meetings are the gas company and service company members. Associates, which include manufacturers, receive AGA pbulications but have no input into the operation of the Association.

Testing and certification is conducted for members of the manufacturing community that are independent of the Association. AGA Labs does not test and certify equipment for either the gas company or service company members.

OSHA believes that, based upon an examination of the application and discussions with executives of the AGA Labs, the American Gas Association Laboratories can be considered to be in compliance with the requirements of section 1910.7(b)(3).

Final Decision and Order

Based upon a preponderance of the evidence resulting from an examination of the complete application, the supporting documentation, and the OSHA staff finding including the on-site report, OSHA finds that the American Gas Association Laboratories has met the requirements of 29 CFR 1910.7 to be recognized by OSHA as a Nationally Recognized Testing Laboratory to test and certify certain equipment or materials.

Pursuant to the authority in 29 CFR 1910.7, the American Gas Association Laboratories is hereby recognized as a Nationally Recognized Testing Laboratory subject to the conditions listed below. This recognition is limited to equipment or materials which, under 29 CFR part 1910, require testing, listing, labeling, approval, acceptance, or certification, by a Nationally Recognized Testing Laboratory. This recognition is limited to the use of the following test standards for the testing and certification of new commercial and industrial liquefied petroleum gas (LPG or LP-Gas) consuming appliances and accessories included within the scope of these standards. AGA Labs has stated that all the standards in these categories are used to test equipment or materials which may be used in environments under OSHA's jurisdiction. These standards are all considered appropriate test standards under 29 CFR 1910.7(c)(4):

ANSI Z21.1—Household Cooking Gas Appliances.
ANSI Z21.5.2—Gas Clothes Dryers, Type 2, Volume II.
ANSI Z21.10.3—Gas Water Heaters, Volume III Storage, With Input Ratings Above 75,000 Btu Per Hour, Circulating and Instantaneous Water Heaters.
ANSI Z21.13—Gas-Fired Low-Pressure Steam and Hot Water Heating Boilers
ANSI Z21.15—Manually Operated Gas Valves.
ANSI Z21.18—Gas Appliance Pressure Regulators.
ANSI Z21.20—Automatic Gas Ignition Systems and Components.
ANSI Z21.21—Automatic Valves for Gas Appliances.
ANSI Z21.22—Relief Valves and Automatic Gas Shutoff Devices for Hot Water Supply Systems.
ANSI Z21.23—Gas Appliance Thermostats.
ANSI Z21.40.1—Gas-Fired Absorption Summer Air Conditioning Appliances.
ANSI Z21.47—Gas-Fired Central Furnaces (Except Direct Vent Central Furnaces).
ANSI Z21.61—Gas-Fired Toilets.
ANSI Z21.64—Direct Vent Central Furnaces.
ANSI Z21.66—Automatic Vent Damper Devices for Use With Gas-Fired Appliances Electrically Operated.
ANSI Z21.73—Portable Camp Lanterns for Use With Propane Gas.
ANSI Z83.3—Gas Utilizaiton Equipment in Large Boilers.
ANSI Z83.4—Direct Gas-Fired Make-Up Air Heaters.
ANSI Z83.6—Gas-Fired Infrared Heaters.
ANSI Z83.7—Gas-Fired Construction Heaters.
ANSI Z83.8—Gas Unit Heaters.
ANSI Z83.9—Gas-Fired Duct Furnaces.
ANSI Z83.11—Gas Food Service Equipment—Ranges and Unit Boilers.
ANSI Z83.12—Gas Food Service Equipment—Banking and Roasting Ovens.
ANSI Z83.13—Gas Food Service Equipment—Deep Fat Fryers.
ANSI Z83.14—Gas Food Service Eqipment—Counter Appliances (Counter-or Floor-Mounted).
ANSI Z83.15—Gas Food Service Equipment—Kettles, Steam Cookers, and Steam Generators.
ANSI Z83.16—Gas-Fired Unvented Commercial and Industrial Heaters.

The American Gas Association Laboratories must also abide by the following conditions of its recognition, in addition to those already required by 29 CFR 1910.7:

This recognition does not apply to any aspect of the AGA Labs' Follow-Up Services Program which is available only to qualified manufacturers, requires only two on-site inspections per year, and is based upon the Laboratories evaluation and accreditation of the manufacturer's Quality Assurance Program;

The Occupational Safety and Health Administration shall be allowed access to AGA Labs' facilities and records for purposes of ascertaining continuing compliance with the terms of its recognition and to investigate as OSHA deems necessary;

If AGA Labs has reason to doubt the efficacy of any test standard it is using under this program, it shall promptly inform the test standard developing organization of this fact and provide that organization with appropriate relevant information upon which its concerns are based;

AGA Labs shall not engage in or permit others to engage in any misrepresentation of the scope or conditions of its recognition. As part of this condition, AGA Labs agrees that it will allow no representation that it is either a recognized or an accredited Nationally Recognized Testing Laboratory (NRTL) without clearly indicating the specific equipment or material to which this recognition is tied, or that its recognition is limited to certain products;

AGA Labs shall inform OSHA as soon as possible, in writing, of any change of ownership or key personnel, including details;

AGA Labs will continue to meet the requirements for recognition in all areas where it has been recognized; and

AGA Labs will always cooperate with OSHA to assure compliance with the letter as well as the spirit of its recognition and 29 CFR 1910.7.

EFFECTIVE DATE: This recognition will become effective on June 7, 1990, and will be valid for a period of five years from that date, until June 7, 1995, unless terminated prior to that date, in accordance with 29 CFR 1910.7.

Signed at Washington DC, this 30th day of May 1990.

Gerard F. Scannell,

Assistant Secretary.

[FR Doc. 90-13223 Filed 6-6-90; 8:45 am]

BILLING CODE 4510-26-M

Pension and Welfare Benefits Administration

Advisory Council on Employee Welfare and Pension Benefit Plans; Meeting

Pursuant to the authority contained in section 512 of the Employee Retirement Income Security Act of 1974 (ERISA), 29 U.S.C. 1142, a public meeting of the Advisory Council on Employee Welfare and Pension Benefit Plans will be held on Wednesday, June 27, 1990, in Room S-4215, U.S. Department of Labor Building, Third and Constitution Avenue, NW., Washington, DC 20210.

The purpose of the Sixty-Third meeting of the Secretary's ERISA Advisory Council which will begin at 9:30 a.m., is to review and provide input as to the desired scope and agenda being prepared by each of the Council's work group i.e., Annuities; Pension Fund Investment Behavior; Enforcement, and to invite public comment on any aspect of the administration of ERISA.

Members of the public are encouraged to file a written statement pertaining to any topic concerning ERISA by submitting 20 copies on or before June 21, 1990 to William E. Morrow, Executive Secretary, ERISA Advisory Council, U.S. Department of Labor, suite N-5677, 200 Constitution Avenue, NW., Washington, DC 20210. Individuals, or representatives of organizations wishing to address the Advisory Council should forward their request to the Executive Secretary or telephone (202) 523-8753. Oral presentations will be limited to ten minutes, but an extended statement may be submitted for the record.

Organizatons or individuals may also submit statements for the record without testifying. Twenty (20) copies of such statement should be sent to the Executive Secretary of the Advisory Council at the above address. Papers will be accepted and included in the record of the meeting if received on or before June 21, 1990.

Signed at Washington, DC, this 1st day of June, 1990.

David George Ball,

Assistant Secretary for Pension and Welfare Benefits Administration.

[FR Doc. 90-13153 Filed 6-6-90; 8:45 am]

BILLING CODE 4510-29-M

NATIONAL COMMUNICATIONS SYSTEM

Federal Telecommunication Standards

AGENCY: National Communications System, Office of Technology and Standards.

ACTION: Notice of testing for development and verification of concepts proposed for adoption as Fed-Std-1049.

FOR FURTHER INFORMATION CONTACT: Mr. Dennis Bodson, National Communications System, telephone (202) 692-2124.

FOR TECHNICAL INFORMATION CONTACT: Mr. Dave Peach or Mr. Robert Adair, Institute for Telecommunication Sciences, telephone (303) 497-5116.

SUPPLEMENTARY INFORMATION: This Government funded testing will be directed from the Institute for Telecommunication Sciences, the National Telecommunications and Information Administration's facility at Boulder, CO. The testing will include test exercises with nodes at various vendor and Government laboratories and operational sites throughout the United States. It is anticipated that this effort will be conducted over a multi-year period.

Initial testing will involve HF radio systems that employ Automatic Link Establishment (ALE) waveforms. Functions that are specified by FED-STD-1049 will be tested as development matures and prototypes can be built to validate the proposed ideas for achieving goals necessary for link protection and data security. Fed-Std-1049, sections 1, 2 and 3, will include proposed solutions (standardized functions and features) for Link Protection (LP), Anit-Interference and Encryption.

Standardized equipment and procedures that enhance link authentication and data integrity are required to fulfill the needs of the DoD and other Government agency's missions that include the counter-drug initiative.

The NCS encourages the offering of technical contributions from vendors that will provide viable candidate solutions for Government agency's use in fulfillment of their missions.

Dennis Bodson,

Assistant Manager NCS Office of Technology & Standards.

Beverly Sampson,

Federal Register Liaison Officer.

[FR Doc. 90-13199 Filed 6-6-90; 8:45 am]

BILLING CODE 3610-05-M

NATIONAL SCIENCE FOUNDATION

Advisory Panel for Applications for Advanced Technologies; Meeting

The National Science Foundation announces the following meeting:

Name: Advisory Panel for the Applications for Advanced Technologies, Science and Engineering Education.

Date and Time: June 29 and 30, 1990, from 6 to 9 p.m. on Friday and from 8:30 a.m. to 4 p.m. Saturday.

Place: State Plaza Hotel, 2117 E Street, NW., Ambassador Room, Washington, DC 20037.

Type of Meeting: Closed.

Contact Person: Dr. Andrew R. Molnar, Program Director, Applications for Advanced Technologies, room 635A, Phone: (202) 357-7064.

Purpose of Meeting: To provide advice and recommendations concerning support for research.

Agenda: To review and evaluate research proposals as part of selection process for awards.

Reason for Closing: The proposal being reviewed include information of a propriety or confidential nature, including technical information; financial data, such as salaries and personal information concerning individuals associated with the proposals. The matters are within exemptions (4) and (6) of 5 U.S.C. 552 b (c), Government in the Sunshine Act.

Dated: June 4, 1990.

M. Rebecca Winkler,

Committee Management Officer.

[FR Doc. 90-13187 Filed 6-6-90; 8:45 am]

BILLING CODE 7555-01-M

Materials Research Advisory Committee; Meetings

The National Science Foundation announces the following meetings:

Name: Site Visit Subcommittee of the Materials Research Advisory Committee.

Date	Place	Time
June 25, 1990	Massachusetts Institute of Technology, Cambridge, MA.	8 a.m. -5 p.m.
June 26, 1990	Florida State University, Tallahassee, FL.	8 a.m.-5 p.m.
June 27, 1990	New Mexico State University, Las Cruces, NM.	8 a.m.-5 p.m.

Type of Meeting: Closed.

Contact Person: Dr. Adriaan M. De Graaf, Deputy Division Director, Division of Materials Research, room 408, National Science Foundation, Washington, DC 20550, Telephone: (202) 357-9794.

Purpose of Meeting: To provide advice and recommendations concerning the establishment of a new National High Magnetic Field Laboratory.

Agenda: Review and evaluation of National High Magnetic Field Laboratory Proposals as part of the selection process of an award.

Reason for Closing: The proposal being reviewed include information of a proprietary or confidential nature, including technical information; financial data, such as salaries; and personal information concerning individuals associated with the proposals. The matters are within exemptions (4) and (6) of 5 U.S.C. 552b (c), Government in the Sunshine Act.

M. Rebecca Winkler,

Committee Management Officer.

[FR Doc. 90-13188 Filed 6-6-90; 8:45 am]

BILLING CODE 7555-01-M

NUCLEAR REGULATORY COMMISSION

Memorandum of Understanding; Subagreement #2 Between NRC and Illinois Department of Nuclear Safety on ASME Code Activities

ACTION: Publication of Subagreement #2 between U.S. NRC and the Illinois Department of Nuclear Safety on ASME Code Activities.

SUMMARY: Section 274i. of the Atomic Energy Act of 1954, as amended, allows the Commission to enter into agreements with the States "to perform inspections or other functions on a cooperative basis as the Commission deems appropriate." Section 274i. MOUs differ from agreements entered into between NRC and a State under the "Agreement State" program; the latter is accomplished only by entering into an agreement under section 274b. of the Atomic Energy Act. A 274i. MOU can be entered into by a State whether or not it has a 274b. agreement.

This Subagreement, signed by the NRC and the Illinois Department of Nuclear Safety, provides for cooperation between the State and NRC regarding ASME Code activities.

In April of 1984, NRC and the State of Illinois signed an "umbrella" MOU, providing principles of cooperation between the State and NRC in areas of concern to both. In June of 1984, NRC and the State of Illinois signed Subagreement #1 which provided the basis for mutually agreeable procedures whereby the State may perform inspection functions for and on behalf of the NRC at certain reactors and materials licensees' facilities which generate low-level waste.

Subagreement #2 under this MOU provides the basis for mutually agreeable procedures whereby the Illinois Department of Nuclear Safety (IDNS) may perform inspection, audit and similar functions for nuclear power plants together with and for and on behalf of the Commission under a program created pursuant to the American Society of Mechanical Engineers Boiler and Pressure Vessel Code (ASME Code) and accepted by NRC and IDNS.

This Subagreement was published for public comment on November 22, 1988. NRC's summary of and response to these comments are as follows:

Summary of Comments—One letter was received from the American Society of Mechanical Engineers stating they had no comment on the Subagreement. Commonwealth Edison Company (CECo) provided comments on the proposed Subagreement, while indicating they supported the language in the proposed MOU. The majority of the CECo comments were actually requests for or recommendations that additional clarification be made regarding certain issues. The CECo comments and NRC responses are as follows:

NRC Participation in IDNS Rulemaking: CECo requested NRC's views as to what extent NRC intends to participate in State rulemaking proceedings related to ASME Code activities. Prior to the negotiation of this Subagreement, IDNS requested NRC views on a proposed rule. NRC provided comments as requested. Should a similar request be received in the future, NRC would consider performing such a review. In addition, NRC reserves the right to comment on any proposed State rules on its own initiative, consistent with applicable State or federal law.

State Verification of Compliance: CECo requested a clarification of the role of IDNS in verifying compliance with Section III and XI of the ASME Code for safetyrelated systems described in the FSAR/USAR. The NRC intends that inspections that are performed by State inspectors under the terms of this agreement will be done in cooperation with and on behalf of the NRC and that the NRC is repsonsible for conducting safety inspections of nuclear power plants to assure that the plants are designed, constructed, tested, and operated in accordance with pertinent NRC regulatory requirements.

NRC Expectations for IDNS Personnel: CECo believes the NRC should clarify the extent to which federal protocol would apply to State inspectors; that is, whether State inspectors should be considered agents of the NRC or the State. Under the Subagreement, IDNS inspectors will participate in NRC ASME Code inspections, and inspections conducted by IDNS under the Subagreement will be performed in cooperation with and on behalf of the NRC.

NRC Expectations of State Notice: CECo believes NRC should clarify the type of notice that IDNS inspectors are expected to give when acting under this Subagreement. Notice of inspection intentions is not normally given to NRC licensees prior to the conduct of the

inspection. IDNS inspectors will be required to not divulge unannounced inspections. When State inspectors are conducting ASME Code inspections of areas that fall under NRC jurisdiction, it should be asumed that these inspections are being performed under the terms of this Subagreement. Notice of IDNS inspections that fall outside the scope of this Subagreement have no applicability to the NRC.

Enforcement Actions: CECo requested that NRC clarify the assumption that NRC enforcement actions will be the only enforcement actions which will be taken as a result of joint inspections. The NRC intends that enforcement actions not be duplicated by the State when enforcement action is taken by NRC, and the Subagreement clearly states that the NRC controls enforcement actions. NRC will coordinate with the State to ensure that this occurs.

Resolution of Conflicts: CECo requested that NRC clarify its understanding of the relationship between IDNS, ASME and the National Board of Boiler and Pressure Vessel Inspectors. The NRC understanding is that the ASME is the final arbitrator over any interpretation of ASME requirements.

In view of the comments received and NRC's response, which satisfactorily addresses the comments, the Commission sees no need to revise the Subagreement as published.

FOR FURTHER INFORMATION CONTACT: Roland Lickus, Chief, State and Government Affairs, U.S. Nuclear Regulatory Commission, Region III, 799 Roosevelt Road, Building 4, Glen Ellyn, Illinois 60137 (telephone 312/790-5500).

Dated at Rockville, MD, this 1st day of June 1990.

For the Nuclear Regulatory Commission.

Harold R. Denton,

Director, Office of Governmental and Public Affairs.

SUBAGREEMENT #2 BETWEEN THE NUCLEAR REGULATORY COMMISSION AND THE ILLINOIS DEPARTMENT OF NUCLEAR SAFETY

I. Authority

The Nuclear Regulatory Commission (NRC) and the Illinois Department of Nuclear Safety (IDNS) entered into this Subagreement under the authority of the Memorandum of Understanding (MOU) of April 1984, between Illinois and NRC (49 FR 20586; 5/15/84) and under section 274i, of the Atomic Energy Act of 1954, as amended.

II. Background

A. NRC and ASME Code

1. The Atomic Energy Act of 1954, as amended, and the Energy Reorganization Act of 1974, as amended, require the Nuclear Regulatory Commission (NRC) (previously the Atomic Energy Commission (AEC)) to license and regulate, among other activities, the manufacture, construction, and operation of utilization facilities (nuclear power plants) in order to assure the common defense and security and to protect the health and safety of the public. Under these statutes, the NRC has the ultimate responsibility to regulate nuclear power plant safety.

2. In June 1971, AEC promulgated regulations which established minimum quality standards for the design, fabrication, erection, construction, testing, and inspection of boiling and pressurized water-cooled nuclear power plants by requiring conformance with appropriate editions and addenda of specified published industry codes and standards. These regulations, 10 CFR § 50.55a (and the now revoked § 115.43a), have provided specific guidance to manufacturers and users of structures, systems and components of nuclear power plants for meeting Criterion 1 of the NRC's "General Design Criteria for Nuclear Power Plants" in Appendix A of 10 CFR part 50 (See 36 FR 11423; 6/12/71). That criterion requires that structures, systems and components of nuclear power plants important to safety be designed, fabricated, erected, and tested to quality standards that reflect the importance of the safety functions to be performed. In particular, these regulations have required pressure vessels, piping, pumps, and valves that were part of a reactor's coolant pressure boundary to be constructed (e.g., designed, fabricated, inspected, and tested) in accordance with ASME Code Editions and Addenda.

3. The AEC stated in the preamble of the regulations, among other things, that:

i. It accepted the ASME inspection process;

ii. Licensees, vendors and others could use the ASME inspection and survey systems in partial fulfillment of its requirements to the extent that they were shown by the description of the quality assurance program required by § 50.34(a)(7) to satisfy the applicable requirements of Appendix B of 10 CFR part 50;

iii. Section 50.55a(b)(2) (now § 50.55a(a)(3)) provides a basis for the authorization of alternatives to the requirements of the specified ASME Code sections and other standards if it can be shown that an acceptable level of safety will be provided; and

iv. It is considered that a significant improvement in the level of quality in construction of structures, systems and components important to safety would be afforded by compliance with the requirements of more recent versions of an ASME Code than those specified in the amendments and it encouraged such compliance whenever practicable, regardless of the date of purchase of equipment or the provisions of the amendments.

4. Presently, to promote the safe operation of nuclear components, NRC requires use of Section III, Division 1, of the ASME Code for construction of Class 1, 2, and 3 components, and Section XI, Division 1, of the ASME Code for inservice inspections of these components.

5. In March of 1981, NRC, ASME, and the National Board of Boiler and Pressure Vessel Inspectors (NB) entered into an "Exchange of Correspondence" that set forth "Principles" for "The Accreditation and Inspection of Nuclear Supplier Quality Assurance Programs." These principles define the NRC's, the ASME's, and the NB's responsibilities and actions with respect to the ASME/NB accreditation program and third party inspection of Certificate Holders providing products and services to nuclear facilities in accordance with ASME Code, Section III (Divisions 1 and 2). The key objective of the Exchange of Correspondence was to provide NRC licensees and license applicants with a non-duplicative, efficient and effective procedure for implementing the ASME/NB nuclear accreditation program and the monitoring of supplier quality assurance (QA) activities to ensure compliance with NRC, ASME, and NB programmatic QA requirements.

6. On March 31, 1986, the NRC's Office of Inspection and Enforcement distributed Information Notice No. 86-21 informing NCR licensees, construction permit holders and vendors of NRC's recognition of ASME's Accreditation Program for holders of N, NPT, NA, and NV stamps and Certificates of Authorization.

7. NRC's endorsement of the system established under ASME consisted of a detailed assessment of the ASME's infrastructure from which, among other things, NRC has determined that it provides an effective inspection program that NRC can accept to carry out its mission.

B. Illinois, IDNS, and the ASME Code

1. The ASME Code provides rules for the construction of heating boilers,

power boilers, pressure vessels and nuclear power plant components. Also, the ASME Code provides recommended rules for the care and operation of heating boilers, recommended guidelines for the care of power boilers, and rules for the inservice inspection of nuclear power plant components. The ASME has an Accreditation System that is used to ensure the quality of construction of ASME Code components. The ASME Accreditation System is based on a program of authorized inspection, which requires an Authorized Inspector (AI), (an Authorized Nuclear Inspector (ANI) in the case of the nuclear sections of the ASME Code), designated or approved by an Authorized Inspection Agency (AIA) to inspect independently the activities of a Certificate Holder during construction under the ASME Code. In addition, Section XI of the ASME CODE provides the rules and requirements for inservice inspection, including inservice testing, of nuclear power plants. Section XI is also based on a program of authorized inspection which requires that an Authorized Nuclear Inservice Inspector (ANII) from an AIA independently review the owner's inservice inspection plan, verify that the required tests and inspections have been performed, the requirements met, and the results correctly recorded.

2. In accordance with the provisions of Section 2 of the Illinois Boiler and Pressure Vessel Safety Act (Ill. Rev. Stat. 1985. ch. 111 1/2, par. 3202) the Illinois Board of Boiler and Pressure Vessel Rules adopted the ASME Boiler and Pressure Vessel Code.

3. In pertinent part, Section 2a of the Illinois Boiler and Pressure Vessel Safety Act (Ill. Rev. Stat. 1985, ch. 111 1/2 par. 3202a) provides that IDNS shall have sole State jurisdiction with respect to ASME Code compliance over all boilers and pressure vessels contained within or upon or in connection with any nuclear facility within the State of Illinois and that IDNS shall have the same authority and shall have and exercise the same powers in relation to such boilers and pressure vessels as the Board or the State Fire Marshal has and exercises in relation to other boilers and pressure vessels within the State of Illinois.

4. Illinois also enters into this Subagreement to facilitate implementing its responsibilities with respect to ASME code compliance under the Illinois Boiler and Pressure Vessel Safety Act.

III. Scope

A. This Subagreement defines the way in which the NRC and IDNS will cooperate in the planning and conducting of inspections of nuclear power plants to ensure compliance with NRC's regulations and the Exchange of Correspondence on ASME Section III and Section XI components. This Subagreement does not apply to investigations or inquiries conducted by the NRC. Except as provided in VII.B.13., this Subagreement does not apply to IDNS's inspections of, and enforcement actions regarding boilers, pressure vessels and appurtenances not covered in a Final Safety Analysis Report (FSAR)/Updated Safety Analysis Report (USAR).

B. For the purpose of this MOU, "Inspection" is defined as an audit, observation, examination, review, and related functions to verify whether an item, component, or activity conforms to specified requirements of the ASME Code Sections III and XI. The scope of these inspections shall be limited to those systems described in the FSAR/USAR.

C. Nothing in this Subagreement is intended to restrict or expand the statutory authority of NRC, Illinois, or IDNS, or to affect or vary the terms of agreement in effect under the authority of Section 274b. of the Atomic Energy Act of 1954, as amended; nor is anything in this Subagreement intended to restrict or expand the authority of Illinois and IDNS on ASME Code matters not within the scope of this Subagreement.

IV. Purpose and Intent

A. Although NRC has the ultimate responsibility to regulate nuclear power plant safety under the Atomic Energy Act and Energy Reorganization Act, noted above, NRC recognizes the interest of Illinois in the overall safety and health of its citizens. For this reason, NRC and IDNS agree to cooperate in implementation of NRC's safety programs related to nuclear power plants. Further, NRC recognizes that, to the extent that IDNS supports NRC's safety mission, additional resources are applied to overall nuclear safety. Thus, NRC recognizes IDNS's desire to participate in NRC's inspections of nuclear power plants.

B. The objective of this Subagreement is to provide a framework for IDNS to assist NRC in performing safety inspections under 10 CFR § 50.55a. IDNS intends to verify owner's compliance with Sections III and XI of the ASME Code for all safety-related systems, applicable nonsafety-related systems, components, and supports of these systems and components, as described in the FSAR/USAR of nuclear power plants. It is intended that these verifications will apply to Section III construction activities and to Section XI inservice inspection activities after Section III requirements have been met. The NRC will take appropriate enforcement actions for joint inspections conducted under this Subagreement.

C. Within this framework, NRC and IDNS intend that IDNS's role in ASME Code activities not only help maintain safety, enhance joint understanding, reduce duplication of effort, and provide a unified position on matters of joint concern, but also that it be well-defined, appropriately controlled and agreed to in advance by NRC and IDNS to minimize potential jurisdictional and technical disputes.

D. IDNS inspectors may accompany NRC personnel inspecting nuclear power plant components manufactured outside Illinois but intended to be used within it.

V. NRC's General Responsibilities

NRC is responsible for conducting safety inspections of nuclear power plants to assure that the plants are designed, constructed, tested, and operated in accordance with pertinent NRC regulatory requirements. These inspections are conducted in accordance with the NRC Inspection Manual using personnel appropriately qualified to perform the necessary tasks. The NRC will take appropriate enforcement actions for joint inspections conducted under this Subagreement.

VI. IDNS's General Responsibilities

A. Assist the NRC when requested in performing planning NRC safety inspections under 10 CFR 50.55a.

B. Cooperate with the NRC in such inspections to assure that these components meet the requirements of the ASME Code as adopted and endorsed by the NRC.

C. Conduct inspections at manufacturing facilities, materials suppliers, AIAs, architect/engineers and other ASME related activities not covered in this Subagreement to verify ASME Code compliance; IDNS will provide the results of these activities to NRC for information.

D. Inspect boilers and pressure vessels in nuclear facilities within the State of Illinois and issue Inspection Certificates as required by sections 10 and 11 of the Illinois Boiler Pressure Vessel Safety Act, provided that IDNS's activities under this paragraph shall not be inconsistent with Federal law and the rules, policies, and practices of the NRC.

VII. Implementation—NRC's and IDNS's Specific Responsibilities

IDNS and NRC agree to work in concert to assure that the following training, inspection and enforcement,

and information exchange protocol are followed.

A. Training

1. IDNS's inspectors accompanying NRC's inspectors will be qualified and certified by IDNS in accordance with the NRC Inspection Manual, or its equivalent. Based on IDNS inspector performance, NRC reserves the right to revoke IDNS inspector certification under this Subagreement and it shall provide the reasons for the action in writing to IDNS.

2. NRC will use its best efforts to make space available in its inspector training courses, seminars, and special orientation programs to accommodate the training needs of IDNS inspectors.

3. IDNS will pay the travel and per diem expenses of its inspectors attending training courses. Where NRC establishes special training classes, IDNS agrees to reimburse NRC for its costs of training IDNS inspectors.

4. IDNS personnel who inspect vessels and appurtenances not covered in an FSAR/USAR shall meet the qualification requirements under Illinois State law and are not required to be qualified and certified in accordance with the NRC Inspector Manual or its equivalent.

B. Inspections and Enforcement

1. IDNS's activities are not intended to duplicate NRC's regulatory activities.

2. IDNS's inspectors are responsible for meeting all requirements of an NRC licensee related to personal safety and access at the plant site.

3. Before IDNS's inspectors are qualified and certified under this Subagreement, they may participate with NRC inspectors as observers at safety inspections or work under the guidance and direction of NRC's inspectors.

4. To facilitate cooperation and efficient use of resources, NRC and IDNS inspectors will conduct joint team safety inspections under this Subagreement. An NRC inspector will lead the team and be in charge of the inspection.

5. For these joint team safety inspections, NRC and IDNS will work together to develop inspection plans. For reactive inspections in which a quick response is necessary, time may not permit the joint development of an inspection plan or IDNS's participation in such an inspection. NRC will involve IDNS to the maximum extent possible consistent with protection of the public health and safety.

6. IDNS will use NRC to channel any IDNS information request to a licensee which is made to support the planning and implementation of the joint team safety inspections.

7. NRC and IDNS will perform safety inspections in accordance with the inspection plans using applicable procedures in the NRC Inspection Manual.

8. Should IDNS develop inspection findings or otherwise identify problems about ASME Code compliance, it will identify these promptly to the NRC inspection team leader.

9. IDNS may attend and participate in the NRC's inspection entrance and exit meetings with licensees of nuclear power plants in Illinois or with vendors fabricating systems or components for use in Illinois on matters within the scope of this Subagreement.

10. Within 15 working days after completing its portion of a safety inspection, IDNS will document to NRC its inspection's scope, details and results in a report written in the format described in the NRC Inspection Manual. The NRC team leader will use the information in preparation of the NRC's final report.

11. If, based on its review of the IDNS report, NRC identifies potential violations of NRC regulatory requirements, NRC will take appropriate enforcement action as prescribed in Appendix C of 10 CFR part 2. If NRC proposes escalated enforcement action, based on IDNS findings, it will give IDNS reasonable notice of the time and place of the enforcement conference, and IDNS may attend that conference. At NRC request, IDNS will assist NRC during any enforcement conferences or hearings at which NRC takes enforcement action as a result of a violation identified by an IDNS inspector.

12. IDNS will be given reasonable notification of and the opportunity to participate in NRC inspections of a licensee's corrective action(s) resulting from a joint team safety inspection.

13. IDNS will give reasonable notification to NRC of its inspections of boilers, pressure vessels, and appurtenances not covered in an FSAR/USAR.

14. IDNS will inform NRC if it is unable to participate in an NRC inspeciton activity.

C. Information Exchange

1. IDNS and NRC agree to the greatest extent possible and in good faith to make available to each other information within the intent and scope of this Subagreement. Specifically, NRC recognizes the value of IDNS's data acquisition system and IDNS agrees to make available to NRC data in this system related to activities under this Subagreement.

2. IDNS and NRC agree to meet periodically at mutually agreeable times and places to exchange information on matters of common concern pertinent to this Subagreement.

3. IDNS and NRC agree to consider each other's identified information needs and concerns, as well as those of the licensee, when developing inspection plans.

4. NRC agrees to make available to IDNS inspeciton-related documentation for inspections conducted under this Subagreement.

5. IDNS will not publicly disclose inspection findings prior to the release of the NRC inspection report.

6. To preclude the premature public release of sensitive informaiton, IDNS and NRC shall protect sensitive information to the extent permitted by the Federal Freedom of Information Act, the Illinois Freedom of Information Act and other applicable authority. IDNS and NRC shall consult with each other before releasing sensitive or proprietary information related to findings under this Subagreement.

VIII. Contacts

A. The principal contacts for this Subagreement will be the Director, Division of Reactor Safety, NRC, Region III, and the Manager, Office of Nuclear Facility Safety, IDNS. These individuals may designate appropriate staff representatives for the purpose of administering this Subagreement.

B. Identification of these contacts is not intended to restrict communication between NRC and IDNS staff members on technical and other day-to-day activities.

IX. Resolution of Conflicts

If disagreement arise about ASME Code related issues, NRC or IDNS may consult ASME or the National Board, as necessary. ASME is the final authority on such issues concerning ASME Code compliance regarding ASME Code stamped components. Should conflicts or disagreements occur between NRC and IDNS, NRC and IDNS will jointly work together to resolve these differences. The NRC's General Counsel is the final authority to interpret the Commission's regulations.

X. Effective Date

This Subagreement will take effect after it has been executed by both parties.

XI. Duration, Termination, and Modification

This Subagreement may be amended or modified upon written agreement by both parties and may be terminated upon 30 days written notice by either party.

XII. Separability

If any provision of this Subagreement, or the application of any provision to any person or circumstance is held invalid, the remainder of this Subagreement and the application of such provisions to other persons or circumstances shall jot be affected.

Dated: April 9, 1990.

For the Nuclear Regulatory Commission,

James M. Taylor,

Executive Director of Operations.

Dated: May 15, 1990.

For the Illinois Department of Nuclear Safety,

Thomas W. Ortciger,

Director.

[FR Doc. 90-13230 Filed 6-6-90; 8:45 am]

BILLING CODE

Nominations for Visiting Fellows Program

AGENCY: Nuclear Regulatory Commission.

ACTION: Call for nominations.

SUMMARY: The Nuclear Regulatory Commission (NRC) is inviting nominations of physicians, having expert qualifications in the medical specialty fields of Nuclear Medicine or Radiation Oncology, to apply as Visiting Fellows. Others having expert qualifications in related fields such as Diagnositic Radiological Physics, Therapeutic Radiological Physics or Radiopharmancy are also invited to apply.

SUPPLEMENTARY INFORMATION:

Objectives. NRC is seeking to expand its understanding of the regulated community by creating a program for Visiting Fellows. The objectives of this program are to improve NRC's knowledge of the medical community; to keep abreast of new technology and developments in the diagnostic and therapeutic uses of isotopes; to develop an awareness of the socio-economic factors governing health care; to develop and sustain a base of experienced individual familar with the regulatory environment; to improve NRC's regulatory process; and to develop medical use regulations that minimally intrude into medical practice. The program is open to physicians interested in seeking an appointment for individual sabbatical pursuits. Other specialists on sabbatical, or those who wish to engage in post-doctroal research, will also be considered. Individuals participating in the Visiting Fellows Program (VFP) would join NRC, for approximately one year, to undertake activities consistent with the interests and needs of NRC and with the individual's training and experience; and that will result in a clearly defined assignment useful to NRC's medical regulatory program.

The number of appointments made will depend on the range of skills embodied in the nominations, individual interests and the needs of NRC

In addition to a specific assignment or research project, it is anticipated that the Fellow would attend meetings of NRC's Advisory Committee on the Medical Use of Isotopes (ACMUI); Federal, State, and local agencies; professional organizations; and groups, to participate in discussions on issues related to medical affairs and radiation medicine. The selectee may also participate in public meetings and seminars sponsored by NRC for exchanging information and discussing issues, of mutual interest, that will benefit the regulation of medical practice. A collateral NRC goal is to create a cadre of individual with knowledge and experience in the regulation of the medical use of isotopes; therefore, it is likely that former Fellows may be asked to particpate, from time to time, in NRC-sponsored meetings and seminars after their appointments end, to provide advice and consultation about the regulated program.

Therefore, NRC is primarily soliciting nominations of physicians involved with the medical use of radioisotopes, but will be pleased to receive nominations of other radiation health professionals and medical radiation specialists to serve in the VFP.

Appointment Method. Appointments will be made by means of Intergovernmental Personnel Act assignment, reimbursable detail, or professional term appointment, depending on the selectee's situation.

Term of Appointment. The term of appointment will be approximately one year. Appointments may be lengthened, depending on the depth and scope of the Fellow's project, to approximately two years.

Compensation. Visiting Fellows will receive compensation commensurate with their experience, salary history and federal pay guidelines while serving their appointment. Visiting Fellows will be reimbursed for official travel and relocation expenses.

Duty Location and Travel. Visiting Fellows may be assigned to any Office in NRC, including Office of the Commissioners, consistent with the interests and needs of NRC and the individual's training and experience. The duty location is at NRC Headquarters, One White Flint North, 11555 Rockville Pike, Rockville, Maryland 20852. It is anticipated that there will be some trave associated with this position.

Eligibility Requirements. NRC is an equal opportunity employer. Mominees must be U.S. citizens. Nomiees must also satisfy applicable NRC security, conflict of interest, and drug-free work place standards. Eligibility is open to physicians specializing in Nuclear Medicine or Radiation Oncology, Diagnostic Radiological Physicists, Therapeutic Radiological Physicists and Radiopharmacists. Other nominees, will also be considered based on the needs of NRC and the individual's interests.

How to Nominate. Candidates may be nominated by professional groups, medical societies, government agencies, or may be self-nominated. Nominations must provide the nominee's current address and telephone number and include a resume describing the educational and professional qualifications of the nominee. A brief statement of the individual's professional objectives should also be included.

Where to Submit Nominations. Submit nominations to: Secretary of the Commission, ATTN: Visiting Fellows Management Officer, U.S. Nuclear Regulatory Commission, Washington, DC 20555.

Date Nominations Are Due. Nominations are due to the Secretary of the Commission by August 31, 1990.

FOR FURTHER INFORMATION, CONTACT: James H. Myers, Medical, Academic, and Commercial Use Safety Branch, Mail, Stop: 6H3, U.S. Nuclear Regulatory Commission, Washington, DC 20555, telephone (301) 492-0637.

Dated At Rockville, Maryland, this 31st day of May, 1990.

For the Nuclear Regulatory Commission.

John E. Glenn,

Chief, Medical, Academic, and Commercial Use Safety Branch, Division of Industrial and Medical Nuclear Safety, NMSS.

[FR Doc. 90-13231 Filed 6-6-90; 8:45 am]

BILLING CODE 7590-01-M

OFFICE OF THE UNITED STATES TRADE REPRESENTATIVE

[Docket No. 301-55]

Termination of Section 302 Investigation Regarding Measures Imposed by the Government of Canada Affecting Exports of Pacific Roe Herring and Salmon

AGENCY: Office of the United States Trade Representative.

ACTION: Notice of termination of investigation under section 302 of the Trade Act of 1974, as amended.

SUMMARY: The United States Trade Representative ("USTR") has terminated an investigation initiated under section 302 of the Trade Act of 1974, as amended ("Trade Act"), with respect to restrictions maintained by the Government of Canada on the export of Pacific salmon and roe herring to the United States, having reached a satisfactory interim resolution of the issues under investigation. The USTR will monitor under section 306(a) of the Trade Act Canadian compliance with the interim settlement of this dispute.

DATES: This investigation was terminated effective June 1, 1990.

FOR FURTHER INFORMATION CONTACT: Kenneth Freiberg, Associate General Counsel, Office of the U.S. Trade Representative, 600 17th Street NW., Washington, DC 20506, (202) 395-7305.

SUPPLEMENTARY INFORMATION: On April 1, 1986, Icicle Seafoods and nine other companies with fish processing facilities in southeastern Alaska and the State of Washington filed a petition under section 302 of the Trade Act alleging that the Canadian Government prohibited exports to the United States of unprocessed Pacific herring and pink and sockeye salmon. Petitioners claimed that this practice violated the General Agreement on Tariffs and Trade ("GATT").

On May 16, 1986, the USTR initiated an investigation on the basis of the petition. On the same date, the United States requested consultations with the Government of Canada. When consultations failed to yield a satisfactory resolution of the issue, the USTR invoked the formal dispute settlement procedures of the GATT and won a favorable panel decision that was adopted by the GATT Council in March 1988.

On March 22, 1988, the Government of Canada announced that it would eliminate its export prohibitions effective January 1, 1989. The Government of Canada also announced that it intended to replace the export prohibitions with new requirements for landing and inspection of certain species of fish prior to exportation.

The USTR informed the Canadian Government that the proposed landing requirements would not satisfactorily remedy Canada's GATT violation since they would also be inconsistent with the GATT. In addition, the USTR maintained that the proposed landing requirements would violate the FTA, which was then pending entry into force.

On August 30, 1988, the USTR invited public comments, pursuant to section 304(b)(1)(A) of the Trade Act, on a proposed USTR determination regarding the Canadian export prohibition. The USTR determined on March 28, 1989, that Canada's export prohibition denied a right to which the United States was entitled under the GATT. At the same time, the USTR sought public comment on possible U.S. trade action as a result of this determination and directed the section 301 Committee to conduct a public hearing pursuant to section 304(b)(1)(A) on such action (54 FR 13264). The public hearing was held on April 26, 1989.

On April 25, 1989, Canada repealed its export prohibition and replaced it with regulations requiring all Pacific roe herring and salmon caught in Canadian waters to be brought to shore in British Columbia prior to export. In an exchange of letters dated May 23 and 30, 1989, the United States and Canada agreed to submit Canada's landing requirements to an FTA dispute settlement panel.

On October 16, 1989, the panel issued its final report, in which it found that Canada's 100 percent landing requirements for roe herring and salmon violated FTA Article 407, which prohibits GATT-inconsistent export restrictions. The panel suggested that there were several alternatives available to Canada. One alternative, the panel said, was the imposition of more limited landing requirements to the extent justified in particular areas on conservation grounds.

Based upon the panel repor, the USTR determined pursuant to section 304 of the Trade Act that the Canadian export restrictions on Pacific roe herring and salmon denied U.S. rights under the FTA.

On February 23, 1990, the Canada-United States Trade Commission decided upon an interim settlement of the dispute. The principal elements of the Commission's decision are as follows:

(1) Canada will make available for direct at-sea exports to the United States 20 percent of British Columbia roe herring and salmon during 1990 and 25 percent during the period 1991-93;

(2) Canada may require that roe herring exported to the United States not be shipped to third countries unless it has been processed to the same degree required in Canada;

(3) Salmon and roe herring exported directly by sea to the United States will be subject to at-sea verification and sampling;

(4) The Commission's decision will be elaborated and implemented in the least-trade burdensome manner possible;

(5) The Commission will review the operation of the decision after March 1, 1993;

(6) Either government may terminate the arrangement upon six months' notice.

In light of the Commission's decision, the USTR has determined pursuant to section 304(a)(1)(B) of the Trade Act that the appropriate action at this time is to terminate the investigation of this matter. The USTR intends to monitor Canadian implementation of the Commission's decision under section 306(a) of the Trade Act. If the USTR considers that Canada has not satisfactorily implemented its commitments under the Commission's decision, the Trade Representative shall determine what further action to take under section 301.

A. Jane Bradley,

Chairman, Section 301 Committee.

FR Doc. 90-13252 Filed 6-6-90; 8:45 am]

BILLING CODE 3190-01-M

RAILROAD RETIREMENT BOARD

Agency Forms Submitted for OMB Review

AGENCY: Railroad Retirement Board.

ACTION: In accordance with the Paperwork Reduction Act of 1980 (44 U.S.C. chapter 35), the Board has submitted the following proposal(s) for the collection of information to the Office of Management and Budget for review and approval.

Summary of Proposal(s)

(1) *Collection title:* Application for Survivor Death Benefits.

(2) *Form(s) submitted:* AA-21, AA-11a, G-131 and G-273a.

(3) *OMB Number:* 3220-0031.

(4) *Expiration date of current OMB clearance:* Three years from date of OMB approval.

(5) *Type of request:* Extension of the expiration date of a currently approved

collection without any change in the substance or in the method of collection.

(6) *Frequency of response:* On occasion.

(7) *Respondents:* Individuals or households.

(8) *Estimated annual number of respondents:* 14,570.

(9) *Total annual responses:* 24,170.

(10) *Average time per response:* .37087 hrs.

(11) *Total annual reporting hours:* 8,964.

(12) *Collection description:* The collection obtains the information needed to pay death benefits and annuities due but unpaid at death under the RRA. Benefits are paid to designated beneficiaries or to survivors in a priority designated by law.

ADDITIONAL INFORMATION OR COMMENTS: Copies of the proposed forms and supporting documents can be obtained from Dennis Eagan, the agency clearance officer (312-751-4693). Comments regarding the information collection should be addressed to Ronald J. Hodapp, Railroad Retirement Board, 844 Rush Street, Chicago, Illinois 60611 and the OMB reviewer, Shannah Koss-McCallum (202-395-7316), Office of Management and Budget, room 3002, New Executive Office Building, Washington, DC 20503.

Dennis Eagan,

Clearance Officer.

[FR Doc. 90-13192 Filed 6-6-90; 8:45 am]

BILLING CODE 7905-01-M

SECURITIES AND EXCHANGE COMMISSION

[International Series Rel. No. 126; File No. 265-16]

Emerging Markets Advisory Committee; Meeting and Request for Public Comment

AGENCY: Securities and Exchange Commission.

ACTION: Notice of meeting of the Securities and Exchange Commission Emerging Markets Advisory Committee.

SUMMARY: This is to give public notice that the Securities and Exchange Commission Emerging Markets Advisory Committee will conduct a meeting on June 12, 1990 at 10:30 a.m. in room 1C30 at the Securities and Exchange Commission, 450 Fifth St. NW., Washington, DC. The meeting will be open to the public. This is also to invite the public to submit written comments to the Committee.

ADDRESSES: Written comments should be submitted in triplicate to Jonathan G. Katz, Secretary, Securities and Exchange Commission, 450 Fifth St., NW., Washington, DC 20549.

FOR FURTHER INFORMATION CONTACT: Thomas L. Riesenberg, Office of the General Counsel, at (202) 272-3088 or Joseph G. Mari, Office of International Affairs, at (202) 272-2306.

SUPPLEMENTARY INFORMATION: In accordance with section 10(a) of the Federal Advisory Committee Act, 5 U.S.C. App. 1, 10(a), the Securities and Exchange Commission Emerging Markets Advisory Committee will conduct a meeting on June 12, 1990 at the Securities and Exchange Commission, 450 Fifth Street, NW., Washington, DC, beginning at 10:30 a.m. This meeting will be open to the public. This will be the first meeting of the Advisory Committee. The purpose of the meeting will be to review the objectives and responsibilities of the Advisory Committee and to establish plans for the orderly progression of the Committee's work. The Committee will consider areas in which the Commission's assistance has already been sought by officials in countries with emerging securities markets and will undertake to identify areas in which the Commission may provide assistance.

The Chairman has determined that this meeting should be held sooner than fifteen days after publication of this notice in the **Federal Register** in order to obtain the assistance of the Advisory Committee on areas in which Commission assistance has been sought and in view of previous scheduling commitments of the members of the Committee.

Dated: June 5, 1990.

Jonathan G. Katz,

Advisory Committee Management Officer.

[FR Doc. 90-13334 Filed 6-5-90; 11:54 am]

BILLING CODE 8010-01-M

[Release No. 34-28070; File No. SR-AMEX-90-08]

Self-Regulatory Organizations; Notice of Filing of Proposed Rule Change by the American Stock Exchange, Inc. Relating to the Listing of Index Warrants Based on the CAC-40 Index

Pursuant to section 19(b)(1) of the Securities Exchange Act of 1934 ("Act"), 15 U.S.C. 78s(b)(1), notice is hereby given that on May 25, 1990, the American Stock Exchange, Inc. ("Amex" or "Exchange") filed with the Securities and Exchange Commission ("Commission") the proposed rule change as described in items I, II and III below, which Items have been prepared by the self-regulatory organization. The Commission is publishing this notice to solicit comments on the proposed rule change from interested persons.

I. Self-Regulatory Organization's Statement of the Terms of Substance of the Proposed Rule Change

The Amex is proposing under section 106 of the Amex Company Guide, to list index warrants based on the CAC-40 Index. In accordance with the requirements set forth in Securities Exchange Act Release No. 26152 (October 3, 1988) 53 FR 39832 (October 12, 1988), the Amex has submitted this filing pursuant to Rule 19b-4 under the Act to obtain Commission approval to list these warrants.

II. Self-Regulatory Organization's Statement of the Purpose and Statutory Basis for, the Proposed Rule Change

In its filing with the Commission, the self-regulatory organization included statements concerning the purpose of, and statutory basis for, the proposed rule change and discussed any comments it received on the proposed rule change. The text of these statements may be examined at the places specified in item IV below. The self-regulatory organization has prepared summaries, set forth in sections (A), (B), and (C) below, of the most significant aspects of such statements.

A. Self-Regulatory Organization's Statement of the Purpose of, and Statutory Basis for, the Proposed Rule Change

In Securities Exchange Act Release No. 26152 (October 3, 1988) 53 FR 39832 (October 12, 1988), the Commission approved amendments to section 106 (Currency and Index Warrants) of the Amex Company Guide to permit the listing of index warrants based on established market indices, both foreign and domestic.

In approving the aforementioned amendments, the Commission expressed interest in the impact of additional index products on U.S. markets, and stated that the Amex would be required to submit for Commission approval any specific index warrants that it proposed to trade. The Amex is now proposing to list index warrants based on the CAC-40 Index, an internationally recognized, capitalization-weighted index consisting of 40 leading stocks listed and traded on the Paris Bourse. The CAC-40 Index is calculated and managed by the Societe des Bourses Francaises.

Such warrant issues will conform to the listing guidelines under Section 106

of the Amex Company Guide, which provides that (1) The issuer shall have assets in excess of $100,000,000 and otherwise substantially exceed the size and earnings requirements in section 101(a) of the Company Guide; (2) the term of the warrants shall be for a period ranging from one to five years from the date of issuance; and (3) the minimum public distribution of such issues shall be 1,000,000 warrants together with a minimum of 400 public holders, and have an aggregate market value of $4,000,000.

CAC-40 index warrants will be direct obligations of their issuer subject to cash-settlement during their term, and either exercisable throughout their life (*i.e.*, American style) or exercisable only on their expiration date (*i.e.*, European style). Upon exercise, or at the warrant expiration date (if not exercisable prior to such date), the holder of a warrant structured as a "put" would receive payment in U.S. dollars to the extent that the CAC-40 Index has declined below a pre-stated cash settlement value. Conversely, holders of a warrant structured as a "call" would, upon exercise or at expiration, receive payment in U.S. dollars to the extent that the CAC-40 Index has increased above the pre-stated cash settlement value. If "out-of-the-money" at the time of expiration, the warrants would expire worthless.

The Amex has adopted suitability standards applicable to recommendations to customers of index warrants and transactions in customer accounts. Exchange Rule 411, Commentary .02 renders the options suitability standard in Exchange Rule 923 applicable to recommendations regarding index warrants. The Exchange also recommends that index warrants be sold only to options-approved accounts. Exchange Rule 421, Commentary .02 requires a Senior Registered Options Principal or a Registered Options Principal to approve and initial a discretionary order in index warrants on the day the order is entered. In addition, the Amex, prior to the commencement of trading, will distribute a circular to its membership calling attention to specific risks associated with warrants on the CAC-40 Index.

In its approval order for index warrants, the Commission noted that, with respect to foreign index warrants, there should be an adequate mechanism for sharing surveillance information with respect to the index's component stocks. In this regard, the Amex is actively engaged in discussions with representatives of the Societe des Bourses Francaises to establish an appropriate means to accomplish such information sharing. The Exchange believes that the proposed rule change is consistent with the requirements of the Act, and in particular, section 6(b)(5), as the warrants are designed to prevent fraudulent and manipulative acts and practices and to promote just and equitable principles of trade, and are not designed to permit unfair discrimination between customers, issuers, brokers or dealers.

B. Self-Regulatory Organization's Statement on Burden on Competition

The Amex does not believe that the proposed rule change will impose an inappropriate burden on competition.

C. Self-Regulatory Organization's Statement on Comments on the Proposed Rule Change Received from Members, Participants, or Others

No written comments were either solicited or received.

III. Date of Effectiveness of the Proposed Rule Change and Timing for Commission Action

Within 35 days of the date of publication of this notice in the **Federal Register** or within such longer period (i) as the Commission may designate up to 90 days of such date if it finds such longer period to be appropriate and publishes its reasons for so finding or (ii) as to which the self-regulatory organization consents, the Commission will:

(a) By order approve such proposed rule change, or

(b) Institute proceedings to determine whether the proposed rule change should be disapproved.

IV. Solicitation of Comments

Interested persons are invited to submit written data, views and arguments concerning the foregoing. Persons making written submission should file six copies thereof with the Secretary, Securities and Exchange Commission, 450 Fifth Street, NW., Washington, DC 20549. Copies of the submission, all subsequent amendments, all written statements with respect to the proposed rule change that are filed with the Commission, and all written communications relating to the proposed rule change between the Commission and any person, other than those that may be withheld from the public in accordance with the provisions of 5 U.S.C. 552, will be available for inspection and copying in the Commission's Public Reference Section, 450 Fifth Street, NW., Washington, DC. Copies of such filing will also be available for inspection and copying at the principal office of the above-mentioned self-regulatory organization. All submissions should refer to the file number in the caption above and should be submitted by June 28, 1990. For the Commission, by the Division of Market Regulation, pursuant to delegated authority.

Dated: May 29, 1990.

Margaret H. McFarland,

Deputy Secretary.

[FR Doc. 90-13141 Filed 6-6-90; 8:45 am]

BILLING CODE 8010-01-M

[Release No. 34-28069; File No. AMEX-90-01]

Self-Regulatory Organizations; American Stock Exchange, Inc.; Order Granting Approval of Proposed Rule Change Relating to Accelerated Comparison of Equity Transactions

May 29, 1990.

Pursuant to section 19(b)(1) of the Securities Exchange Act of 1934 ("Act"), 15 U.S.C. 78s(b)(1), on January 24, 1990, the American Stock Exchange, Inc. ("Amex") or "Exchange") filed with the Securities and Exchange Commission ("Commission" or "SEC") a proposed rule change (File No. SR-Amex-90-01) that implements Amex's Intra-Day Comparison System ("IDC") for processing uncompared transactions in "equity securities" traded on the Exchange.[1] The Commission published notice of the proposal in the **Federal Register** on March 15, 1990 and granted accelerated approval on a temporary basis through May 31, 1990.[2] The Commission received no comments on the proposal. On May 25, 1990, Amex requested permanent approval of the proposal.[3] This order approves the proposal on a permanent basis.

I. Description of the Proposal

Amex has been participating in a long-term industry-wide effort to accelerate the comparison of equity

[1] In this context, Amex uses the term "equity securities" to mean stocks, rights, and warrants, but not equity options or other securities. Telephone conversation between George E. Stokes, Assistant Vice President, Amex, and Thomas C. Etter, Attorney, SEC, dated May 9, 1990.

[2] *See* Securities Exchange Act Release No. 27809 (March 16, 1990), 55 FR 11074. The purpose of the temporary approval order was to solicit comments from interested persons before issuance of a permanent approval order. The Commission believes that, for proposals as significant as this one, there should be an opportunity for public comment.

[3] *See* letter from James F. Duffy, General Counsel, Amex, to Mary Revell, Branch Chief, SEC, dated May 22, 1990.

transactions. As a result, on March 8, 1989, the Exchange filed with the Commission Amex Rule 719 (File No. SR-Amex-89-05), requiring that, within eighteen months from Commission approval, transactions effected on the Exchange be compared or otherwise closed out not later than one business day from the date of trade (*i.e.*, "T+1"). On August 18, 1989, the Commission approved Rule 719 on a temporary basis [4] and on December 31, 1989, extended that temporary approval through March 31, 1990.[5] On March 27, 1990, the Commission issued an order granting permanent approval to Amex Rule 719.[6]

To accelerate the comparison of transactions, as well as to accomplish several other business objectives, Amex has designed and developed IDC. Initially, IDC's function will be limited to processing transactions in equity securities. In this capacity, IDC will serve as an on-line, post-trade correction processing system, with electronic input via terminal screens that are located at the Exchange and in members' offices.[7]

Amex has advised the Commission that IDC's hardware and software are adequate for the routine and peak levels of equity activity. Moreover, Amex states that IDC is not connected with any other Amex computer system and that operating on a T+1 correction cycle would affect no other systems and would not affect the capacity of IDC itself. Also, Amex states that inasmuch as IDC uses private lines, security is not a significant issue.[8]

The proposed rule change reflects Amex's broader movement to accelerate the resolution of uncompared equity transactions from a T+3 timetable to a T+1 timetable, as proposed by Amex rule 719.[9] Amex will submit additional rule proposals, concerning further enhancements to IDC, to the Commission after implementation of the T+1 resolution of uncompared trades. This phased-in implementation is intended to minimize disruption to Amex members, member organizations, and their clearing firms and enable them to become accustomed to the new time frames gradually. Initially, Amex will charge no fees to its membership for use of the IDC system. Amex represents in the filing that any fee schedule that is may implement in the future will be filed with the Commission prior to its implementation.

The proposed IDC operational procedures for processing uncompared transactions in equity securities traded on the Amex are essentially the same procedures as previously in use at the Exchange, but with different (*i.e.*, accelerated) time frames to accommodate the T+1 timetable. Each Amex member will continue to submit original trade input to National Securities Clearing Corporation ("NSCC") on the evening of trade date. NSCC then will match all input and provide "contract sheets" to Amex clearing members and provide a results-of-comparison ("ROC") file to Amex's IDC.[10] IDC routinely begins operations once the ROC file has been received from NSCC on the morning of T+1. IDC extracts from this file all uncompared trades and certain other data. It then creates from such information an ongoing file that is accessible to Amex members.[11]

Amex members make trade corrections through IDC. With the use of IDC terminal screens, Amex members are able to effect corrections by deleting, modifying, and adding trade data. These corrections are reported by amex to NSCC at the close of day for the production of NSCC's supplementary contract sheets.[12]

All unmatched items that have not been reconciled either are corrected through IDC or remain in IDC indefinitely.[13]

Amex believes that reducing the time frames for resolution of uncompared trades will improve the efficiency of equity comparison and clearance and minimize the exposure of members and member organizations to risks due to market fluctuations on uncompared or questioned trades. Amex states in its filing that it will monitor closely, during all phases of T+1 implementation, the results of shortening the time frames for resolution of uncompared trades until such time as the Exchange is satisified that no significant operational problems exist. Implementation of the accelerated time frames will be done in coordination with the NSCC's development and implementation of its comparison redesign.[14]

II. Rationale of the Proposal

Amex states in its filing that the proposed rule change is consistent with section 6(b) of the Act in general and furthers the objectives of section 6(b)(5) in particular in that it fosters cooperation and coordination with persons engaged in regulating, clearing, settling, processing information with respect to, and facilitating transactions in securities.

III. Discussion

The Commission believes the proposal is consistent with the Act. The proposal authorizes the use of IDC to match uncompared trades in equity securities and is part of an industry-wide effort by NSCC, Amex, and other marketplaces to improve and accelerate trade comparison.[15] Moreover, the

---

[4] *See* Securities Exchange Act Release No. 27152 (August 18, 1989), 54 FR 39238.

[5] *See* Securities Exchange Act Release No. 27582 (December 29, 1989), 55 FR 1133.

[6] *See* Securities Exchange Act Release No. 27851 (March 27, 1990), 55 FR 12759.

[7] Planned enhancements to functionality (*e.g.*, expansion of the system's capacity and more terminal units) will increase the terminal locations and the number of users. Amex has stated that IDC's next major development will be the post-trade processing of options, where the scheduled development and functionality will be similar to that for equities. Such enhancements, of course, must be filed with the Commission for review under section 19(b)(2) of the Act.

Once IDC has become fully operational for equities and options in a T+1 comparison (post-trade) processing mode, the Exchange intends to enhance the system further to provide for the "real-time" collection and distribution of actual trade data (on-line) during the trading day. This will mean that: (1) An increased number of locked-in trades will be directly submitted to IDC; (2) resolution of uncompared trades will take place during the trading day as opposed to after hours; (3) linkages to member organizations' mainframe computers will be established (*i.e.*, computer-to-computer data transmission) with concomitant improvements in system efficiency; and (4) data/file sharing between IDC and other Amex systems will be available. An additional benefit will be the eventual elimination of paper input and of manual processing, which should increase the efficiency and accuracy of Amex trade data, which Amex believes will contribute to further reducing risk and exposure to Amex, its members, and member organizations.

[8] *See* letter from John L. Diesem, Senior Vice President, Systems Technology Division, Amex, to Judity Poppalardo, Branch Chief, SEC, dated February 23, 1990.

[9] *See, supra*, notes 4–6.

[10] A "contract sheet" is an NSCC daily report provided by NSCC to its members on the morning of T+1 that lists the previous day's transactions as: (1) Compared trades, (2) uncompared trades, and (3) advisory trades. *See* NSCC Rules and Procedures, Procedures, Sect. II.B.1. at 2–3 (December 8, 1989).

The ROC file (a trade comparison summary) is issued daily by NSCC to Amex on the morning of T+1. *See* Amex "IDC User's Guide" at 3.

[11] *See* Amex "IDC User's Guide" at 3–4.

[12] On the evening of T+1, NSCC produces "supplemental contract lists," which show all compared trade data resulting from corrections submitted on T+1. *See* NSCC Rules and Procedures, Procedures, Sect. II.C.2.e. at 8 (December 8, 1989).

[13] Amex states in its filing that the primary focus for input of corrections to IDC will be through the IDC terminals located in Amex's trade reconciliation room, better known as the "Rejected Option trade Notice" ("ROTN") room at Amex's offices at 22 Thames Street, New York City.

[14] *See* Securities Exchange Act Release No. 27074 (July 28, 1989), 54 FR 32405 [File No. SR-NSCC-89-04].

[15] *See, e.g.*, Securities Exchange Act Release Nos. 27152 (August 18, 1989), 54 FR 39238; 27582 (December 29, 1989), 55 FR 1133 [File No. SR-Amex-89-05]; 26627 (March 14, 1989), 54 FR 11470 [File No. SR-NYSE-88-36]; 27074 (July 28, 1989), 54 FR 32405 [File No. SR-NSCC-89-04].

Commission notes that section 17A(a)(1) of the Act expressly contemplates the goal of prompt and efficient clearance and settlement of securities transactions, and it encourages the use of automation to achieve this goal. That provision of the Act also states that inefficient procedures for the clearance and settlement of securities transactions impose unnecessary risks and costs on investors and on persons facilitating transactions on behalf of investors, and that more efficient and safer procedures for clearance and settlement are necessary in order to protect investors and persons facilitating transactions on their behalf. Further, section 6(b)(5) of the Act states that the rules of securities exchanges should be designed to promote the prompt and accurate clearance and settlement of securities transactions.

IDC, an automated trade correction system, replaces Amex's less efficient manual system. As a result, IDC should reduce substantially the time and expense needed to correct uncompared trades. Accordingly, the Commission believes the proposal will contribute significantly to the prompt and efficient clearance and settlement of securities transactions, that it is fully consistent with the Act, particularly sections 6(b)(5) and 17A(a) of the Act, and that it warrants approval.

As noted above, IDC has been designed to do more, over the longer term, than simply compare trades in equity securities. Nevertheless, with respect to trade resolution itself, Amex's proposal is not a matter of first impression for the Commission. NASDAQ, Inc., with Commission approval, has been using its Trade Acceptance and Resolution System ("TARS") since 1986,[16] and NYSE's Correction System, with Commission approval, became operational in the spring of 1989.[17] NASDAQ's TARS and NYSE's Correction System, like Amex's IDC, are automated facilities that permit members, using terminal screens, to resolve uncompared trades.

VI. Conclusion

For the reasons discussed above, the Commission finds that the proposed rule change is consistent with the Act, particularly sections 6(b)(5) and 17A of the Act, and the rules and regulations thereunder.

It is therefore ordered, pursuant to section 19(b)(1) of the Act, that the above-mentioned proposed rule change [File No. SR-Amex-90-01] be, and hereby is, approved.

For the Commission, by the Division of Market Regulation, pursuant to delegated authority (17 CFR 200.30-3(a)(12)).

Margaret H. McFarland,

Deputy Secretary.

[FR Doc. 90-13142 Filed 6-6-90; 8:45 am]

BILLING CODE 8010-01-M

[16] TARS was designed to assist its subscribers in resolving and reducing their uncompared and advisory over-the-counter trades that were being processed through participating clearing corporations. *See* NASD Market Services, Inc., Trade Acceptance and Reconciliation Service User Guide (May 20, 1986).

[17] *See* Securities Exchange Act Release No. 26773 (May 1, 1989), 54 FR 20027 [File No. SR-NYSE-89-03].

[Release No. 34-28066; File No. SR-CBOE-90-10]

Self-Regulatory Organizations; Notice of Filing and Order Granting Accelerated Approval of Proposed Rule Change by the Chicago Board Options Exchange, Inc., Relating to an Extension of the Pilot Program for Position Limit Exemptions for Hedged Equity Option Positions.

Pursuant to section 19(b)(1) of the Securities Exchange Act of 1934 ("Act"), 15 U.S.C. 78s(b)(1), notice is hereby given that on May 14, 1990, the Chicago Board Options Exchange, Inc. ("CBOE or Exchange") filed with the Securities and Exchange Commission ("Commission") the proposed rule change as described in items I, II and III below, which items have been prepared by the self-regulatory organization. The Commission is publishing this notice to solicit comments on the proposed rule change from interested persons.

I. Self-Regulatory Organization's Statement of the Terms of Substance of the Proposed Rule Change

The CBOE proposes to extend for six months its pilot program for position limit exemptions for hedged equity option positions.[1]

II. Self-Regulatory Organization's Statement of the Purpose of, and Statutory Basis for, the Proposed Rule Change

In its filing with the Commission, the self-regulatory organization included statements concerning the purpose of, and statutory basis for, the proposed rule change and discussed any comments it received on the proposed rule change. The text of these statements may be examined at the places specified in item IV below. The self-regulatory organization has prepared summaries, set forth in sections (A), (B), and (C) below, of the most significant aspects of such statements.

A. Self-Regulatory Organization's Statement of the Purpose of, and Statutory Basis for, the Proposed Rule Change

In May 1988, the Commission approved on a pilot basis the CBOE's proposal to amend the Exchange's position limit rules.[2] Position limits for equity positions are determined in accordance with a three-tiered system based on the number of shares of the underlying security outstanding and/or the underlying security's trading volume.[3]

The CBOE's pilot program provides an exemption from applicable equity option position limits for accounts which have established one of the four commonly used hedged positions on a limited one-for-one basis, i.e., long stock and short call, long stock and long put, short stock and long call, and short stock and short put. However, the maximum position established pursuant to the exemption may not exceed twice the present position limit. The exemption also provides that exercise limits still correspond to position limits, such that investors are allowed to exercise, during any five consecutive business days, the number of option contracts set forth as the position limit, as well as those contracts purchased pursuant to the position limit exemption.[4]

During the initial two-year period that the program has been in operation, the Exchange has not experienced any significant problems with the implementation of the pilot. Accordingly, the Exchange believes that the proposed rule change is consistent with the requirements of the Act and the rules and regulations thereunder. In particular, the Exchange believes that the proposed rule change is consistent with section 6(b)(5) of the Act, which provides, among other things, that the rules of the Exchange are to be designed to prevent fraudulent and manipulative acts and practices, and to protect investors and the public interest.

B. Self-Regulatory Organization's Statement on Burden on Competition

The Exchange does not believe that the proposed rule change will impose any inappropriate burden on competition.

[1] The Commission approved the CBOE's current hedged position limit pilot program for equity options on a two-year pilot basis on May 24, 1988. *See* Securities Exchange Act Release No. 34-25738 (May 24, 1988), 53 FR 20201 (June 2, 1988).

[2] *See* CBOE Rule 4.11.

[3] *Id.*

[4] *See* CBOE Rule 4.12.

C. Self-Regulatory Organization's Statement on Comments on the Proposed Rule Change Received from Members, Participants, or Others

Written comments were neither solicited nor received.

III. Date of Effectiveness of the Proposed Rule Change and Timing for Commission Action

The Exchange requests that the proposed rule change be given accelerated effectiveness pursuant to section 19(b)(2) of the Act.

The Commission finds that the proposed rule change to extend the pilot program is consistent with the requirements of the Act and the rules and regulations thereunder applicable to a national securities exchange, and, in particular, the requirements of section 6(b) (5) thereunder.[5] Specifically, the Commission concludes, as it did when approving the commencement of the pilot, that the CBOE proposal to provide for increased position and exercise limits for equity options in circumstances where those excess positions are fully hedged with offsetting stock positions will provide greater depth and liquidity to the market and allow investors to hedge their stock portfolios more effectively, without significantly increasing concerns regarding intermarket manipulations or disruptions of either the options market or the underlying stock market.[6]

The Commission finds good cause for approving the extension of the pilot program prior to the thirtieth day after the date of publication of notice thereof in the **Federal Register** so that the pilot program may continue uninterrupted. In addition, because there have been no adverse comments concerning the pilot program since its implementation and because of the importance of maintaining the quality and efficiency of the CBOE's markets, the Commission believes good cause exists to approve the extension of the pilot program on an accelerated basis.

IV. Solicitation of Comments

Interested persons are invited to submit written data, views and arguments concerning the foregoing. Persons making written submissions should file six copies thereof with the Secretary, Securities and Exchange Commission, 450 Fifth Street, NW,. Washington, DC 20549. Copies of the submission, all subsequent amendments, all written statements with respect to the proposed rule change that are filed with the Commission, and all written communications relating to the proposed rule change between the Commission and any person, other than those that may be withheld from the public in accordance with the provisions of 5 U.S.C. 552, will be available for inspection and copying in the Commission's Public Reference section, 450 Fifth Street, NW., Washington, DC. Copies of such filing will also be available for inspection and copying at the principal office of the above-mentioned self-regulatory organization. All submissions should refer to the file number in the caption above and should be submitted by June 28, 1990.

It is therefore Ordered, pursuant to section 19(b)(2) of the Act,[7] that the proposed rule change (SR-CBOE-90-10) is approved and, accordingly, that the position limit exemption pilot program for hedged equity options positions is extended until November 17, 1990.

For the Commission, by the Division of Market Regulation, pursuant to delegated authority.

Dated: May 29, 1990.

Margaret H. McFarland,

Deputy Secretary.

[FR Doc. 90-13138 Filed 6-6-90; 8:45 am]

BILLING CODE 8010-01-M

[5] 15 U.S.C. 78f(6)(5) (1982).

[6] During the extension of the pilot, the Commission expects the CBOE to develop criteria to evaluate further the effectiveness of the pilot and to report the results of this evaluation before the pilot expires.

[7] 15 U.S.C. 78s(b)(1982).

[Release No. 34-28082; File No. SR-MBSCC-90-04]

Self-Regulatory Organizations; Filing and Immediate Effectiveness of a Proposed Rule Change by the MBS Clearing Corp. Relating to Broker/Dealer Trade Input on Trade Date, Effective June 1, 1990

June 1, 1990.

Pursuant to section 19(b)(1) of the Securities and Exchange Act of 1934, 15 U.S.C. 78s(b)(1) ("Act"), notice is hereby given that on May 21, 1990, the MBS Clearing Corporation ("MBSCC") filed with the Securities and Exchange Commission ("Commission") the proposed rule change as described in Items I, II, and III below, which Items have been prepared by MBSCC. The Commission is publishing this notice to solicit comments from interested persons on the proposed rule change.

I. Self-Regulatory Organization's Statement of the Terms of Substance of the Proposed Rule Change

The proposed rule change establishes a procedure to require Broker Participants to submit Broker/Dealer trade input on trade date.

II. Self-Regulatory Organization's Statement of the Purpose of, and Statutory Basis for, the Proposed Rule Change

In its filing with the Commission, MBSCC included statements concerning the purpose of and basis for the proposed rule change and discussed any comments it received on the proposed rule change. The text of these statements may be examined at the places specified in Item IV below. MBSCC has prepared summaries, set forth in sections (A), (B), and (C) below, of the most significant aspects of such statements.

A. Self-Regulatory Organization's Statement of the Purpose of, and Statutory Basis for, the Proposed Rule Change

The purpose of the proposed rule change to modify MBSCC's current trade date plus one ("T+1") input requirement for trades submitted by Broker Participants. A "Broker" Participant is defined under MBSCC's rules as a Participant who is in the business of buying and selling securities as an agent on behalf of Dealers. Article I, Rule 1.

MBSCC Article II, Rule 3 provides that Brokers, acting on behalf of selling and purchasing Dealers, are required to submit trade input on each Business Day as MBSCC specifies in its procedures. Currently, Brokers are required to submit trade input on T+1.

In response to the recommendations of MBSCC's Brokers' Advisory, New Procedures/Services and Risk Management Committees, MBSCC will require Broker Participants to submit Broker/Dealer trades by the current cut-off time on trade date. The effective date of this revised procedure is June 1, 1990. At that time, Dealers will be responsible for reporting any discrepancies to the executing Broker on T+1, with the Broker being responsible for corrections on trade date plus two (T+2).

The proposed rule change is consistent with section 17A of the Act in that it facilitates the prompt and accurate clearance and settlement of securities transactions. The proposed change is designed to reduce risk to MBSCC and its Participants by expediting reconciliation of trade comparison and reducing risks associated with market exposure.

B. Self-Regulatory Organization's Statement on Burden on Competition

MBSCC does not believe that any burdens will be placed on competition as a result of the proposed rule change.

C. Self-Regulatory Organization's Statement on Comments on the Proposed Rule Change Received from Members, Participants or Others

All MBSCC Participants were advised of the proposed rule change through an Administrative Bulletin dated April 11, 1990. As of date, no formal, written comments have been received.

III. Date of Effectiveness of the Proposed Rule Change and Timing for Commission Action

MBSCC has designed the proposed rule change for immediate effectiveness upon submission and for implementation on June 1, 1990, pursuant to section 19(b)(3)(A) of the Act. The proposed rule is a stated policy, practice and interpretation with respect to the meaning or enforcement of an existing rule. MBSCC Article II, Rule 3, section 2 requires Brokers, acting on behalf of selling and purchasing Dealers, to submit trade input concerning transactions in Eligible Securities each business day in such form and at such time as MBSCC may specify in the Procedures.

The proposed rule change does not adversely affect the safeguarding of securities or significantly affect the rights and obligations of Participants. The proposed rule change does not significantly alter the operational, financial or systematic obligations of Brokers Participants. Brokers' internal systems capture the trade data on trade date and, to varying degrees input Broker trade data on the trade date. Many of their Dealer customers insist on such trade date input so that the trades are immediately subject to MBSCC mark-to-the-market and margin protection. Because the proposed rule change is designed to reduce risk to MBSCC and its Participants by expediting reconciliation of trade comparison, the trade requirement received the unanimous endorsement of MBSCC's New Product/Services, Risk Management and Broker Advisory Committees.

Finally, mortgage-backed securities settlement is generally 45 to 90 days from trade date. Increasing the trade input requirement by one day has a far less significant effect on mortgage-backed securities (with a 45 to 90 day settlement process) than it would on equity securities (with a five day settlement process).

Because of the foregoing, the proposed rule change has become effective, pursuant to section 19(b)(3)(A) of the Act and subparagraph (e) of Rule 19b-4 thereunder. At any time within 60 days of the filing of the proposed rule change, the Commission may summarily abrogate the proposed rule change if it appears to the Commission that such action is necessary or appropriate in the public interest, for the protection of investors, or, otherwise, in furtherance of the purposes of the Act.

IV. Solicitation of Comments

Interested persons are invited to submit written date, views and arguments concerning the foregoing. Persons making written submissions should file six copies thereof with the Secretary, Securities and Exchange Commission, 450 Fifth Street, NW., Washington, DC 20549. Copies of the submission, all subsequent amendments, all written statements with respect to the proposed rule change that are filed with the Commission, and all written communications relating to the proposed rule change between the Commission and any person, other than those that may be withheld from the public in accordance with the provisions of 5 U.S.C. 552, will be available for inspection and copying in the Commission's Public Reference Section, 450 Fifth Street, NW., Washington, DC. Copies of such filing will also be available for inspection and copying at the principal office of MBSCC. All submissions should refer to file number SR-MBSCC-90-04 and should be submitted by June 28, 1990.

For the Commission, by the Division of Market Regulation, pursuant to delegated authority.

Margaret H. McFarland,

Deputy Secretary.

[FR Doc. 90-13218 Filed 6-6-90; 8:45 am]

BILLING CODE 8010-01-M

[Rel. No. 34-28067; File No. SR-NSCC-90-08]

Self-Regulatory Organizations; National Securities Clearing Corporation; Filing of Proposed Rule Change Amending the Securities Clearing Group Agreement Dated October 19, 1988

May 29, 1990.

Pursuant to section 19(b)(1) of the Securities Exchange Act of 1934 ("Act"), 15 U.S.C. 78s(b)(1), notice is hereby given that on May 8, 1990, the National Securities Clearing Corporation ("NSCC") filed with the Securities and Exchange Commission ("Commission") the proposed rule change as described in Items I and II below, which Items have been prepared by NSCC. The Commission is publishing this notice to solicit comments on the proposed rule change from interested persons.

I. Self-Regulatory Organization's Statement of the Terms of Substance of the Proposed Rule Change

The text of the proposed rule change is discussed below.

II. Self-Regulatory Organization's Statement of the Purpose of, and Statutory Basis for, the Proposed Rule Change

In its filing with the Commission, NSCC included statements concerning the purpose of and basis for the proposed rule change and discussed any comments it received on the proposed rule change. The text of these statements may be examined at the places specified in Item IV below. NSCC has prepared summaries, set forth in sections A, B, and C below, of the most significant aspects of such statements.

A. Self-Regulatory Organization's Statement of the Purpose of, and Statutory Basis for, the Proposed Rule Change

1. Purpose

The proposed rule change consists of an amendment to the Agreement ("SCG Agreement") dated October 19, 1988, entered into by the Securities Clearing Group ("SCG"). The amendment allows Government Securities Clearing Corporation ("GSCC") to become a member of the SCG.

The SCG was formed in 1988 by seven clearing agency self-regulatory organizations (NSCC, Depository Trust Company, Midwest Clearing Corporation, Midwest Securities Trust Company, Options Clearing Corporation, Philadelphia Depository Trust Company, and Stock Clearing Corporation of Philadelphia). The goal of the SCG is to identify and create procedures to minimize risks posed by participants in more than one clearing agency self-regulatory organization. In order to achieve this goal, the group shares appropriate financial, operational and clearing data on common participants. The SCG Agreement sets forth the purpose of the group, the method of participation in the group, and the legal considerations relevant to the group's goals.

The SCG Agreement was filed with the SEC, and authority to enter into the Agreement was granted by order of the

Commission.[1] This order also approved similar filings made by the other SCG members. The SCG Agreement was amended November 9, 1989, to allow Boston Stock Exchange Clearing Corporation and MBS Clearing Corporation to become members of SCG, and NSCC filed a rule proposal to this effect with the Commission.[2] At a meeting of SCG on April 3, 1990, the members of SCG voted to allow GSCC, which is a clearing agency and self-regulatory organization ("SRO") as defined in section 3(a)(23)(A) and 3(a)(26), respectively, of the Securities Exchange Act of 1934, as amended, to also become a party to the SCG Agreement. The SCG and NSCC believe that this entity's participation in the SCG will enhance the goals of the SCG as a whole.

In its order (approving the SCG), the Commission noted that a "nexus" exists among SCG–SROs because of (1) Common participants, (2) interfaces through which clearing agencies offer access to participants in or services offered by other clearing agencies, (3) shared operational and financial exposure and (4) common regulatory responsibilities. It indicated that the development of a formal structure to further these entities' obligations is in accordance with the National Clearance and Settlement System.

GSCC is a clearing corporation which clears and settles government securities transactions. GSCC has participants in common with the members of the SCG and thus, shares operational and financial exposure. Therefore, the nexus of interests clearly exists between the SCG and GSCC. Its inclusion in the group will expand the sources for information sharing, thereby further enabling the SCG to minimize the risks to the clearing system. When the SCG was formed it was intended that the membership would be expanded and, pursuant to the terms of the Agreement, all current SCG Members voted to allow GSCC to become a member. Under the terms of the amendment, GSCC agrees to abide by the terms of the Agreement.

2. Statutory Basis

Since the inclusion of GSCC in the SCG fosters cooperation and coordination with persons engaged in the clearance and settlement of securities transactions, the amendments are consistent with the requirements of the Act and the rules and regulations thereunder applicable to NSCC.

[1] *See* Securities Exchange Act Release No. 27044 (July 18, 1989), 54 FR 30963.

[2] *See* Securities Exchange Act Release No. 27850 (March 27, 1989), 55 FR 12761.

B. Self-Regulatory Organization's Statement on Burden on Competition

NSCC does not believe that the proposed rule will have an impact or impose a burden on competition.

C. Self-Regulatory Organization's Statement on Comments on the Proposed Rule Change Received From Members, Participants, or Others

No written comments have been solicited or received. NSCC will notify the Commission of any written comments received.

III. Date of Effectiveness of the Proposed Rule Change and Timing for Commission Action

Within 35 days of the date of publication of this notice in the **Federal Register** or within such longer period (i) As the Commission may designate up to 90 days of such date if it finds such longer period to be appropriate and publishes its reasons for so finding or (ii) as to which the SRO consents, the Commission will:

(A) By order approve such proposed rule change, or

(B) Institute proceedings to determine whether the proposed rule change should be disapproved.

IV. Solicitation of Comments

Interested persons are invited to submit written data, views and arguments concerning the foregoing. Persons making written submissions should file six copies thereof with the Secretary, Securities and Exchange Commission, 450 Fifth Street NW., Washington, DC 20549. Copies of the submission, all subsequent amendments, all written statements with respect to the proposed rule change that are filed with the Commission, and all written communications relating to the proposed rule change between the Commission and any person, other than those that may be withheld from the public in accordance with the provisions of 5 U.S.C. 552, will be available for inspection and copying in the Commission's Public Reference Section, 450 Fifth Street NW., Washington, DC 20549. Copies of such filing will also be available for inspection and copying at the principal office of the above-mentioned self-regulatory organization. All submissions should refer to File No. SR–NSCC–90–08 and should be submitted by June 28, 1990.

For the Commission, by the Division of Market Regulation, pursuant to delegated authority.

Margaret H. McFarland,

Deputy Secretary.

[FR Doc. 90–13143 Filed 6–6–90; 8:45 am]

BILLING CODE 8010-01-M

[Release No. 34-28062; File No. SR-NSCC-90-09]

Self-Regulatory Organizations; National Securities Clearing Corporation; Notice of Filing and Immediate Effectiveness of a Proposed Rule Change Regarding the Reporting of Locked-In Trade Data

May 29, 1990.

Pursuant to section 19(b)(1) of the Securities Exchange Act of 1934, ("Act"), 15 U.S.C. 78s(b)(1), notice is hereby given that on May 11, 1990, the National Securities Clearing Corporation ("NSCC") filed with the Securities and Exchange Commission ("Commission") the proposed rule change as described in items I, II, and III below, which Items have been prepared by NSCC. The Commission is publishing this notice to solicit comments on the proposed rule change from interested persons.

I. Self-Regulatory Organization's Statement of the Terms of Substance of the Proposed Rule Change

The proposed rule change makes a technical correction to NSCC procedures regarding the submission of OTC Locked-In Trade Data.[1] The text of the proposed rule change is as follows:

[*] Indicates previously underlined material

* * * * *

[Italics] Indicates additions

[Brackets] Indicates deletions

* * * * *

II. Trade Comparison Service*

*C. Regular Way Over-the-Counter and Other Exchange Equity Securities**

1. Trade Input and Comparison*

Trade input and comparison of regular way transactions executed OTC and on other securities exchanges (other than NYSE and Amex) is the same as for NYSE and Amex regular way transactions in equity securities, except as noted below:

* * * * *

(d) Locked-in trade data may also be reported by Qualified Special

[1] NSCC SCC Division Procedures, Section II. C.

Representative [2] and Service Bureaus and, may *also* [only] be reported on [T. Locked-in trade data reported by self-regulatory organizations may be reported on T or] T+1.[3] Locked-in trade data reported on T+1 is reflected on T+1 Locked-in contract lists. These lists are available on the morning of T+2.

* * * * *

II. Self-Regulatory Organization's Statement of the Purpose of, and Statutory Basis for, the Proposed Rule Change

In its filing with the Commission, NSCC included statements concerning the purpose of and basis for the proposed rule change and discussed any comments it received on the proposed rule change. The text of these statements may be examined at the places specified in item IV below. NSCC has prepared summaries, set forth in sections (A), (B), and (C) below, of the most significant aspects of such statements.

A. Self-Regulatory Organization's Statement of the Purpose of, and Statutory Basis for, the Proposed Rule Change

(1) The purpose of the rule change is to make a technical correction to NSCC procedure to permit NSCC to treat submission of OTC Locked-in trade data equally, regardless of the source of the submission. Treating all submissions equally will promote operational efficiency for NSCC members.[4]

(2) Since the proposed rule change promotes the prompt and accurate clearance and settlement of securities transactions for which NSCC is responsible, it is consistent with Section 17A of the Act, as amended.[5]

[2] Pursuant to NSCC Rule 39, members who are Qualified Special Representatives ("QSR") are able to submit trade data on behalf of other NSCC members, where the QSR is always the contra-party to the transaction. *See* Securities Exchange Release No. 23792 (November 12, 1986), 51 FR 41880 (November 19, 1986).

[3] Trade data for trades executed on the NYSE and Amex in equity securities, except NYSE odd-lot trades, may be submitted throughout T, and until 7 p.m. on T+1.

[4] Currently locked-in trade data may be reported until midnight on T as a batched transmission. In the event the QSR does not report trade data by midnight, the data can no longer be batched and reported as a locked-in trade. The QSR and the member on whose behalf the QSR was acting would report the trade to NSCC as an "as of" trade. The trade data would then go into NSCC's regular two-sided comparison system.

[5] In addition, the proposal encourages the use of automated systems in the clearance and settlement of securities transactions consistent with section 17A(a)(1) of the Act.

B. Self-Regulatory Organization's Statement on Burden on Competition

NSCC does not believe that the proposed rule will have an impact or impose a burden on competition.

C. Self-Regulatory Organization's Statement on Comments on the Proposed Rule Change Received from Members, Participants, or Others

No written comments have been solicited or received. NSCC will notify the Commission on any written comments received.

III. Date of Effectiveness of the Proposed Rule Change and Timing for Commission Action

The foregoing rule change has become effective, pursuant to section 19(b)(3)(A) of the Act in that the proposed rule change effects the administration of a stated policy of NSCC. At any time within sixty days of the filing of such proposed rule change, the Commission may summarily abrogate such rule change if it appears to the Commission that such action is necessary or appropriate in the public interest, for the protection of investors, or otherwise in furtherance of the purposes of the Act.

IV. Solicitation of Comments

Interested persons are invited to submit written data, views and arguments concerning the foregoing. Persons making written submissions should file six copies thereof with the Secretary, Securities and Exchange Commission, 450 Fifth Street, NW., Washington, D.C. 20549. Copies of the submission, all subsequent amendments, all written statements with respect to the proposed rule change that are filed with the Commission, and all written communications relating to the proposed rule change between the Commission and any person, other than those that may be withheld from the public in accordance with provisions of 5 U.S.C. 552, will be available for inspection and copying in the Commission's Public Reference Section, 450 Fifth Street, NW., Washington, DC. Copies of such filing will also be available for inspection and copying at the principal office of NSCC. All submissions should refer to the file number SR-NSCC-90-09 and should be submitted by June 28, 1990.

For the Commission, by the Division of Market Regulation, pursuant to delegated authority.

Margaret H. McFarland,

Deputy Secretary.

[FR Doc. 90-13140 Filed 6-6-90; 8:45 am]

BILLING CODE 8010-01-M

[Release No. 34-28071; Filed No. SR-NASD-90-21]

Self-Regulatory Organizations; Order Approving Proposed Rule Change by the National Association of Securities Dealers, Inc. Relating to Service Charges for the Digital Interface Service ("DIS")

On April 12, 1990, the National Association of Securities Dealers, Inc. ("NASD") filed with the Securities and Exchange Commission ("Commission") a proposed rule change (Filed No. SR-NASD-90-21), pursuant to section 19(b)(1) of the Securities Exchange Act of 1934 ("Act"), that adds a section to Schedule D of the NASD By Laws establishing a new service called the Digital Interface Service ("DIS"). In its filing the NASD stated that DIS offers market makers an alternative, flexible method of receiving NASDAQ Workstation information. In addition, the proposed rule change sets service charges for DIS.

Notice of the proposed rule change was given in Securities Exchange Act Release No. 27909 (April 17, 1990), 55 FR 15314. The Commission received no comments on the proposal. This order approves the proposal.

In its filing with the Commission, the NASD stated that DIS has been designed to offer NASDAQ market makers an alternative method of receiving broadcast data and Level 3 service.[1] The DIS offers market makers with numerous terminals or specialized automation needs the flexibility to interface with the NASDAQ network without being limited to individual Harris terminals of NASDAQ Workstation display devices. The DIS supports either dedicated or shared use workstations on local area networks employing standard protocols. In contrast to NASD designed NASDAQ Workstation screen displays, the DIS user can develop its own screen configurations, increase functionality to suit its individual needs, and provide for redundancy and emergency back-up for overall improved service quality.

The DIS server will operate in two modes simultaneously: Broadcasting quotes and trade reports to the devices authorized to receive the data, and submitting market maker entries (e.g. quote updates, ACT trade reports, etc.) into the NASDAQ network, as if emanating from NASDAQ Workstations. The DIS broadcast

[1] The NASD has stated in its filing and a subsequent letter dated May 29, 1990 that the DIS has adequate system capacity and protection against vulnerability.

service will be available for up to 640 different issues designated for market making and up to 4,800 issues designated for personal tickets per server.

The NASD explained that pricing for the DIS has been designed to recover, over a five-year period, the fully allocated costs of developing the service and to recover the annual expenses incurred in providing dedicated technical support for the product. The DIS service charge of $1,300 per month, per server is a basic rate service charge that licenses the DIS software to the firm and is geared to recover development and operating costs. The charge is applied to each server that would be necessary to support 16 terminal devices and its attendant communications circuit. For example, if a firm wanted to operate 40 terminals in their trading room providing NASDAQ service through the DIS, they would need a minimum of three servers, at a monthly expense of $3,900.[2]

If the firm decides to configure fewer than 16 displays per server, for additional redundancy or emergency back-up capabilities, the charge per additional circuit required would be $500/month. For example, the firm with 40 terminals may choose to put 10 traders on each server. Although only three servers would be necessary from an operational perspective, that firm would be suing four servers. While the additional server would not incur a service charge, the additional communications circuit required would incur a $500 monthly fee. Finally, the equipment charge of $290/month for each DIS unit would recover the costs of modems, modern maintenance, and communications dispatch time spent in troubleshooting communications outrages.

The Commission believes that the statutory basis for the proposed rule change is consistent with the Act, particularly section 15A(b)(6) and section 15A(b)(5) of the Securities Exchange Act of 1934. Section 15A(b)(6) requires that the rules of the NASD "promote just and equitable principles of trade, foster cooperation and coordination with persons engaged in regulating, clearing, settling, processing information with respect to, and facilitating transactions in securities, remove impediments to and perfect the mechanism of a free and open market and a national market system". Section 15A(b)(5) requires that the rules of the NASD "provide for the equitable allocation of reasonable dues, fees, and other charges among members and issuers and other persons using any facility or system which the association operates or controls."

It is Therefore Ordered, pursuant to section 19(b)(2) of the Act, that File No. SR-NASD-90-21, be, and hereby is, approved.

For the Commission, by the Division of Market Regulation, pursuant to delegated authority, 17 CFR 200.30-3(a)(12).

Dated: May 29, 1990.

Margaret H. McFarland,

Deputy Secretary.

[FR Doc. 90-13139 Filed 6-6-90; 8:45 am]

BILLING CODE 8010-01-M

[2] In addition, to the basic rate for servers, each terminal display receiving NASDAQ Level 3 service will be charged the display rate of $345, corresponding to current charges for each NASDAQ Workstation display.

[Release No. 34-28061; File No. SR-NYSE-90-21]

Self-Regulatory Organizations; Filing of Proposed Rule Change by New York Stock Exchange, Inc. Relating to Overnight Comparison of Equity Transactions

Pursuant to section 19(b)(1) of the Securities Exchange Act of 1934 ("Act"), 15 U.S.C. 78s(b)(1), notice is hereby given that on April 18, 1990, the New York Stock Exchange, Inc. ("NYSE" or "Exchange") filed with the Securities and Exchange Commission ("Commission" or "SEC") the proposed rule change (File No. SR-NYSE-90-21) as described in Items I and II below, which Items have been prepared by the self-regulatory organization ("SRO"). The Commission is publishing this notice to solicit comments on the proposed rule change from interested parties.

I. SRO's Statement of the Terms of Substance of the Proposed Rule Change

The proposed rule change consists of amendments to NYSE Rules 16(A), 115A.30, 130, 131, 133, 135, and 137, the rescission of present Rule 134.A, and the adoption of a new Rule 134.A to provide for the full implementation of overnight comparison of the Exchange's equity transactions on and after July 30, 1990.

II. SRO's Statement of the Purpose of, and Statutory Basis for, the Proposed Rule Change

In its filing with the Commission, the Exchange included statements concerning the purpose of and basis for the proposed rule change. The text of these statements may be examined at the places specified in item IV below and is set forth in sections A, B, and C below.

A. SRO's Statement of the Purpose of, and Statutory Basis for, the Proposed Rule Change

1. Purpose

On September 1, 1988, the Exchange began implementing its Overnight Comparison System ("OCS") by adopting Rule 130.[1] Rule 130 established the principle that "regular way" transactions in listed stocks, rights and warrants (but not listed bonds) must be compared or closed out within one business day from the trade date, *i.e.*, "T+1." [2] This Rule will become fully effective no later than September 1990.

One purpose of this proposed rule change is to establish a specific date for the implementation of Rule 130. The date that the Exchange has selected is July 30, 1990, approximately two months earlier than the time when Rule 130 would become effective automatically. Other purposes of the proposed rule change are to bring various Exchange rules into conformity with the time requirements of Rule 130, to distinguish between the comparison time frame differences in stocks and bonds, and to provide for processing procedures that are unique to the electronic resolution of uncompared trades (also known as "questioned trades" or "QTs"). [3] These proposed rule changes would not affect the settlement of transactions, the majority of which would continue to settle on T+5.

(a) *Rule 16(A)—Resolution of Uncompared ITS Transactions.* Rule 16(A) contains procedures for the on-floor resolution of Intermarket Trading System ("ITS") transactions.[4] The proposed amendment would accelerate the time that the Exchange begins resolution of uncompared ITS transactions from the close of business on T+2 to the opening on T+1.

(b) *Rule 115A.30—OARS Reporting and Comparison.* Rule 115A.30 contains the reporting and comparison procedures for the Exchange's Opening Automated Report Service "OARS." [5]

[1] For discussion of OCS and Rule 130, *see* Securities Exchange Act Release No. 26627 (March 14, 1989), 54 FR 11470 [SEC File No. SR-NYSE-88-36].

[2] The term "regular way" transaction means that settlement occurs on the fifth business day after the trade date, *i.e.*, T+5. *See* NYSE Rule 64(3).

[3] Technically, an uncompared trade does not become a QT unless and until it has remained uncompared after the time it routinely should have been compared. *See* NYSE Rule 134.A(c).

[4] *See* NYSE Rule 15 for definition of "ITS."

[5] OARS is an NYSE order system that processes non-systematized trades received by the Exchange before the opening; OPN is a related system that processes systematized trades received before the opening. *See* NYSE Rule 115A.30.

The proposed amendments to this rule are mainly housekeeping changes to conform the Rule to comparison procedures that have evolved over recent years. For example: (i) Clearing firms no longer submit the omnibus OPN; instead, OARS submits it for them and locks-in that side of the trade; (ii) specialists no longer submit the omnibus OARS; instead, OARS accepts any clearing firm submission with OARS named as the contra side after it validates the opening or reopening price; (iii) there are no "advisories" to acknowledge ("stamp") for the omnibus OPN, since the System locks in OPN; and (iv) a Qualified Clearing Agency [6] no longer advises a specialist that an uncompared OARS trade exists because the uncompared trade is now displayed on the Exchange's Correction System terminal screen.[7]

(c) *Rule 130—Overnight Comparison of NYSE Equity Transactions.* Rule 130 is the enabling Rule for OCS. It requires that regular way transactions is listed stocks, rights and warrants be compared or otherwise closed out on T+1. Rule 130, however, does not apply to bonds.

The first proposed amendment will specify that Rule 130 becomes effective with respect to regular way trades effected on and after July 30, 1990. A second proposed amendment will extend the T+1 comparison and close-out requirements to "next day" and "seller's option" contracts. [8]

(d) *Rule 131—Comparison—Reporting Trades and Providing Facilities.* Rule 131 currently requires NYSE members to: (i) Report their transactions to their offices "* * * as promptly as possible * * *;" (ii) maintain adequate comparison facilities; (iii) have their transaction records available in their offices; and (iv) have a representative available in their offices to answer questions regarding transactions.

The first proposed amendment would require NYSE members to report their transactions to their offices as promptly as possible but not later than one hour following the close of business. The Exchange could extend this time requirement as it may determine. The second proposed amendment would require NYSE members to have their transaction records (or copies thereof) relating to their uncompared trades available on the floor on T+1 to facilitate the resolution of QTs.

(e) *Rule 133—Comparison—Non-Clearing Transactions.* Rule 133 currently requires NYSE members to compare transactions between each other (commonly referred to as "over-the-window") when they do not elect to use the comparison facilities of a Qualified Clearing Agency. The seller sends a two-part comparison form by messenger to the buyer no later than 1 p.m. on T+1.

The proposed amendment would bring Rule 131 into compliance with Rule 130 by requiring the seller to send the form to the buyer no later than 5 p.m. on the day of the Trade Date. The proposed amendment would affect the comparison of regular way transactions in stocks, rights, and warrants. It would not affect bonds.

(f) *Rule 134.A—Differences and Omissions—Cleared Transactions.* Rule 134.A contains the operational procedures for the manual resolution of QTs in listed stocks that have been processed through a Qualified Clearing Agency. Resolution is currently through the use of paper forms on T+3.

The proposed amendment would completely rescind present Rule 134.A. Since the electronic resolution procedures of the Exchange's Correction System are not readily adaptable to the manual, paper form process, existing Rule 134.A would be replaced with a proposed new Rule 134.A containing appropriate procedures for the electronic resolution of QTs within the time frame requirements of Rule 130. Existing Rule 134.B, containing the procedures for resolving QTs in listed bonds, is not proposed for amendment.

(g) *Rule 135—Differences and Omission—Non-Cleared Transactions.* Rule 135 contains the operational procedures for the resolution of QTs that were not processed through a Qualified Clearing Agency. The proposed amendments would shorten the resolution time frame from T+3 to T+1 for transactions in stocks, rights, and warrants for regular way, next day, and seller's option settlement. Resolution time frames for uncompared bond transactions remain unchanged.

(h) *Rule 137—Written Contracts.* Rule 137 currently requires Exchange members who effect transactions in stocks on a seller's option basis, transactions in bonds on a seller's option bais for more than seven days, and all transactions on a "when issued" and "when distributed" basis that are not compared through a Qualified Clearing Agency to compare them with each other, *i.e.*, on an over-the-window basis. This process is similar to that contained in Rule 133, whereby written contracts are exchanged not later than T+2 for other types of contracts.

The proposed amendment would bring Rule 137 into compliance with Rule 130 by requiring members to exchange written contracts in stock on a seller's option basis and all when issued and when distributed securities no later than one hour after the close of business on the Trade Date rather than on T+2. The time frames for comparing sellers option transactions for more than seven business days in bonds remain unchanged.

2. Statutory Basis for the Proposed Rule Change

The Exchange believes that OCS would substantially increase the efficiency of the post-trade comparison process by ensuring that NYSE regular way, next day, and seller's option transactions in stocks, rights, and warrants are compared or otherwise closed out on T+1. Additionally, OCS would reduce—to one business day—the length of time that NYSE members and member organizations are exposed to the risk of loss due to the market fluctuations of uncompared trades by requiring that uncompared trades be resolved or otherwise closed out not later than T+1. These requirements also would help protect investors and the public interest, as required in section 6(b)(5) of the Act, in that they will help prevent fraudulent and manipulative acts and practices, promote just and equitable principles of trade and foster cooperation and coordination with persons engaged in regulating clearing, settling, and processing information with respect to, and facilitating transactions in securities. OCS also would meet the requirements of Section 17A(b)(3)(F) of the Act in that it would promote the prompt and accurate clearance and settlement of securities transactions.

B. SRO's Statement on Burden on Competition

The Exchange does not believe that the proposed rule change would impose any burden on competition not in furtherance of the purposes of the Act.

C. SRO's Statement on Comments on the Proposed Rule Change Received from Members, Participants or Others

The Exchange has not solicited comments on the proposed rule change and no unsolicited comments have been received.

[6] *See* NYSE Rule 132.10 for definition of "Qualified Clearing Agency."

[7] For discussion of NYSE's Correction System, *see* Securities Exchange Act Release No. 26773 (May 1, 1989), 54 FR 20227 [File No. SR-NYSE-89-03].

[8] *See* NYSE Rule 64 for definition of "next day" and "seller's option" contracts.

III. Date of Effectiveness of the Proposed Rule Change and Timing for commission Action

Within 35 days of the date of publication of this notice in the Federal Register or within such longer period (i) as the Commission may designate up to 90 days of such date if it finds such longer period to be appropriate and publishes its reasons for so finding, or (ii) as to which the SRO consents, the Commission will:

(A) By order approve such proposed rule change, or

(B) Institute proceedings to determine whether the proposed rule change should be disapproved.

IV. Solicitation of Comments

Interested persons are invited to submit data, views and arguments concerning the foregoing. Persons making written submissions should file six copies thereof with the Secretary, Securities and Exchange Commission, 450 Fifth Street, NW Washington, DC 20549. Copies of the submission, all subsequent amendments, all written statements with respect to the proposed rule change that are filed with the Commission, and all written communications relating to the proposed rule change between the Commission and any person, other than those that may be withheld from the public in accordance with the provisions of 5 U.S.C. 552, will be available for inspection and copying in the Commission's Public Reference Room, 450 Fifth Street, NW., Washington, DC. Copies of such filing will also be available for inspection and copying at the principal office of NYSE. All submissions should refer to File No. SR-NYSE-90-21 and should be submitted by June 28, 1990.

For the Commission by the Division of Market Regulation, pursuant to delegated authority [17 CFR 200.3(a)(12)].

Dated: May 29, 1990.

Margaret H. McFarland,

Deputy Secretary.

[FR Doc. 90-13219 Filed 6-6-90; 8:45 am]

BILLING CODE 8010-01-M

[Release No. 34-28081; File No. SR-MSRB-89-9]

Self-Regulatory Organizations; Municipal Securities Rulemaking Board; Order Approving Proposed Rule Change Relating to the Delivery of Official Statements and Recordkeeping

The Municipal Securities Rulemaking Board ("MSRB" or "Board") submitted to the Securities and Exchange Commission ("Commission" or "SEC") a proposed rule change (File No. SR-MSRB-89-9) on November 13, 1989, and Amendment No. 1 thereto on February 27, 1990, pursuant to section 19(b)(1) of the Securities Exchange Act of 1934 ("Act") and Rule 19b-4 thereunder. The proposal requests approval of new rule G-36, which would require underwriters to provide to the Board or its designee copies of the final official statement ("OS") and certain other information prepared by issuers of municipal securities. In addition, the proposed rule change creates new Form G-36, which must be submitted with OSs and provides basic transmittal information to the Board. Finally, the proposed rule change amends Board rule G-8 on recordkeeping to require underwriters to keep records of their compliance with rule G-36. In Amendment No. 1, the Board requested approval to establish a policy, pursuant to proposed rule G-36, to provide for the creation of a public access facility for OSs acquired pursuant to that rule.[1] The Board has requested that the Commission delay the effectiveness of the proposed rule change for 30 days following the date of the approval order to allow dealers time to develop procedures to comply with the new requirements.

Notice of filing of the original proposal was published in Securities Exchange Act Release No. 27488 (November 30, 1989), 54 FR 50546. The Commission received 12 comment letters in response to this notice. Notice of Amendment No. 1 to the filing was published in Securities Exchange Act Release No. 27751 (March 1, 1990), 55 FR 8274, and the Commission received four comments in response thereto. The Commission has determined, for the reasons discussed below, to approve the proposal and to delay its effectiveness for 30 days following the date of this order.

I. Background

On June 28, 1989, the Commission adopted Rule 15c2-12 governing underwriters' disclosure obligations for new issue municipal securities.[2] Rule 15c2-12 was designed to establish standards for the procurement and dissemination of disclosure documents by underwriters as a means of enhancing the accuracy and timeliness of disclosure to investors in municipal securities. The Rule requires underwriters to provide, for a specified period of time, copies of final OSs to any potential customer upon request. The MSRB adopted rule G-36 in response to many of the same factors that led the Commission to adopt rule 15c2-12.

In its original filing with the Commission, the Board stated that the complexities of municipal securities (*e.g.*, complex extraordinary and other call features, put options and variable and/or convertible interest rates) make it essential that professionals and investors have access to complete and timely descriptive information about municipal securities and municipal securities issuers. Such information generally is available in OSs for new issue municipal securities. The Board expressed its concern, however, that the flow of information in the new issue market has not been adequate to ensure that market participants have access to the OS for a new issue when trading begins. Furthermore, it appears that dealers who need descriptive information in the secondary market for issues they are trading often may not have the OSs that contain that information. The Board stated that it believes that these informational problems can be ameliorated by the creation of a repository for OSs and other documents, and adopted rule G-36 in furtherance of this goal. The Board also intends to create a Municipal Securities Information Library ("MSIL"), which would function much like a public library for OSs.[3]

II. Description of the Proposal

A. Rule G-36

Rule G-36 is intended to begin the collection process for documents with a view toward including them in the Board's MSIL, if the Commission determines to approve the MSIL.[4] The

---

[1] Also in Amendment No. 12, the Board: (1) Amended rule G-36 to require two copies of OSs and completed Forms G-36; and (2) clarified that Form G-36 must be submitted only when a final OS has been prepared.

[2] Securities Exchange Act Release No. 26985 (June 28, 1989), 54 FR 28799 ("Adoption Release"). In general, the Rule requires underwriters participating in primary offerings of municipal securities of $1,000,000 or more to obtain, review and distribute to investors copies of the issuer's disclosure documents.

[3] *See System Concept of the Municipal Securities Information Library*, by the MITRE corporation for the MSRB (January 17, 1990). The System Concept for the creation of the MSIL would be the subject of a separate rule filing and would be submitted, as a facility of a self-regulatory organization ("SRO"), to the Commission pursuant to section 19(b)(1) of the Act.

[4] The Commission wishes to emphasize that it is not expressing any views on the MSIL and is not, directly or indirectly, sanctioning or approving the MSIL proposal.

Board is currently designing the MSIL and expects that it will be an electronic repository for OSs and other documents. The Board intends to have the MSIL function much like a public library that stores and indexes documents and provides copies of those documents for a fee to parties requesting them. Rule G-36 will require underwriters of issues subject to Commission Rule 15c2-12 to provide to the Board or its designee two copies of the final OS and two completed Forms G-36, which include CUSIP numbers[5] for these issues.[6] In addition, the rule will require underwriters of certain issues not subject to Rule 15c2-12 to send to the Board two copies of the final OS, if prepared by or on behalf of the issuer, along with two completed Forms G-36. These issues include those valued at less than $1 million, but not those qualified for the exemptions set forth in Rule 15c2-12, regardless of the amount of the issue (*e.g.*, certain privately placed and short-term issues). OSs for issues exempt from Rule 15c2-12 will not be required to be sent to the repository because the Board Believes that such documents may not be very useful to repository customers.[7]

Rule G-36 will require that OSs be sent by certified or registered mail, or some other equally prompt means that provides a record of sending, within one business day of receipt from the issuer for issues subject to Rule 15c2-12, but no later than 10 business days after the date of the final agreement to purchase, offer or sell the municipal securities, and within one business day of closing for other issues.

In addition, rule G-36 will require underwriters to send to the Board amended or "stickered" OSs if the issuer amends the document during the underwriting period. Underwriters also must provide a statement that includes the CUSIP number(s) and states that OSs previously were sent to the Board and that the document has since been amended.

Rule G-36 will provide that if an issue is cancelled after documents are provided to the Board, then the underwiter must promptly notify the Board in writing. The Board believes that this provision will ensure that the repository does not collect and disseminate documents for cancelled issues.

Finally, rule G-36 will require that, within 60 days of the effective date of the rule, underwriters must deliver OSs and other required information for each offering of municipal securities from the effective date of Rule 15c2-12 (*i.e.*, January 1, 1990) to the effective date of rule G-36.

B Amendments to Rule G-8

The Board's proposed rule change also will require the underwriter to keep a record of the name, par amount and CUSIP number of all issues subject to rule G-36, along with the dates that the documents and other required information are received from the issuer and are sent to the Board or its designee and, for issues subject to Rule 15c2-12, the date of the final agreement to purchase, offer or sell the municipal securities. The Board stated this change is designed to ensure compliance with certain requirements of Commission Rule 15c2-12, as well as Board rule G-36.

C. The Board's Stated Policy for a Public Access Facility

The public access facility will begin operating on the effective date of rule G-36. The facility will be located at the Board's offices and will be open to the public from 9 a.m. to 4:30 p.m., local time, on those days that the Board's offices are open. The OSs acquired pursuant to rule G-36 will be available no later than one business day after receipt by the Board. A public photocopy machine will be available for copying OSs at $.20 per page. In addition, the Board will make available a list of the OSs that it has acquired and will index these documents by issue and dated date. Members of the public also may telephone the Board's offices to inquire if a particular OS is currently available from the public access facility.

III. Summary of Comments

The Commission received a total of 19 comment letters on the proposed rule change. Fifteen of those letters responded to the Board's original proposal, with six generally favoring it, and nine opposing the proposal.[8] The remaining four letters responded to Amendment No. 1.[9] Many of the

[5] CUSIP numbers are a uniform identification system for securities.

[6] Amendment No. 1 amended the rule to require the submission of two copies of each OS and Form G-36. The Board was concerned that excessive handling would adversely affect the quality of the documents and thus impair its ability to electronically copy the documents into the MSIL. The Board determined, therefore, to require underwriters to deliver two copies of all documents. One copy will be handled only by MSIL personnel for inclusion in the electronic library and the other copy will be available in the public access facility for public copying.

[7] The Board stated that privately place securities probably will not be heavily traded in the secondary market, and short-term issues would often mature soon after the OS is placed in the repository. Of course, the Board will accept any OSs that are provided voluntarily to the repository, along with completed Forms G-36.

[8] The Commission received comments from three broker-dealers (*See* letter to Jonathan G. Katz, Secretary, SEC, from Richard H. Litton, President, First Southwest Company, dated January 17, 1990; and letters to Kathryn Natale, Assistant Director, SEC, from Richard F. Chapdelaine, Chairman of the Board, Chapdelaine & Co., dated December 5, 1989; and Robert J. Ellwood, President, R.W. Ellwood & Co., Inc., dated October 17, 1989); two issuer associations (*See* letters from Jeffrey L. Esser, Executive Director, Government Finance Officers Association, to Jonathan G. Katz, Secretary, SEC, dated December 26, 1989; Jeffrey L. Esser, Executive Director, Government Finance Officers Association, to the Honorable Richard C. Breeden, Chairman, SEC, dated March 21, 1990; and Mary Ellen Withrow, President, National Association of State Auditors, Comptrollers and Treasurers, to Kathryn Natale, Assistant Director, SEC, dated December 26, 1990); three municipal securities information vendors, all of whom are potential competitors of the Board (*See* letters to Jonathan G. Katz, Secretary, SEC, from Joseph V. Riccobono, Executive Vice President, American Banker-Bond Buyer, dated December 27, 1989; Michael R. Bloomberg, President, Bloomberg Financial Markets, dated December 22, 1989; and J. Kevin Kenny, President and Chief Executive Officer, J.J. Kenny Co., Inc., dated December 27, 1989); the Public Securities Association (*See* letter to Jonathan G. Katz, Secretary, SEC, from Ralph Horn, Chairman, Public Securities Association, dated December 27, 1989); the National Association of Bond Lawyers ("NABL") (*See* letter to Jonathan G. Katz, Secretary, SEC, from Stanley Keller, Chairman, NABL, dated January 11, 1990); the Southern Municipal Finance Society (*See* letter to Jonathan G. Katz, Secretary, SEC, from Robert W. Doty, Chairman, Southern Municipal Finance Society, dated December 27, 1989); Doty Research & Development Company (*See* letter to Jonathan G. Katz, Secretary, SEC, from Robert W. Doty, President, Doty Research & Development Company, dated December 27, 1989); two state treasurers (*See* letters from Joan Finney, Treasurer, State of Kansas, to the Honorable Bob Dole, U.S. Senate, dated March 19, 1990, and transmitted to Jonathan G. Katz, Secretary, SEC, dated April 11, 1990; the Honorable Grady L. Patterson, Jr., Treasurer, State of South Carolina, to the Honorable Ernest F. Hollings, U.S. Senate, and transmitted to the Honorable Richard C. Breeden, Chairman, SEC, dated April 5, 1990; and Robert Cronson, Auditor General, State of Illinois, to the Honorable Alan J. Dixon, U.S. Senate, dated March 13, 1990, and transmitted to the Honorable Richard Breeden, Chairman, SEC, dated April 30, 1990).

In addition, the Board received 10 comment letters in response to its Request for Comments on the proposal. The Board described those comments and responded to them in its submission to the Commission, which was described in the notice of the proposed rule change published by the Commission. *See* Securities Exchange Act Release No. 27488 (November 30, 1989), 54 FR 50546.

[9] American Banker-Bond Buyer, J.J. Kenny Co., Inc., National Association of State Auditors, Comptrollers, and Treasurers, and the Southern Municipal Finance Society also submitted comments on Amendment No. 1. (*See* letters to Jonathan G. Katz, Secretary, SEC, from Joseph V. Riccobono, Executive Vice President, American Banker-Bond Buyer, dated March 27, 1990; J. Kevin Kenny, President and Chief Executive Officer, and David R. Francescani, Executive Vice President and General Counsel, J.J. Kenny & Co., Inc., dated March 28, 1990; Mary Ellen Withrow, President, National Association of State Auditors, Comptrollers and Treasurers, dated March 26, 1990; and Robert W. Doty, Chairman, Southern Municipal Finance Society, dated March 28, 1990).

commentators that supported the proposal believe that rule G-36, as the means by which the Board will create a complete collection of all OSs, would benefit the industry significantly by providing a centralized source for information on municipal securities issues. At least one commentator noted that a central repository, as contemplated by the Board, would be far more efficient and less costly than the system of multiple repositories that some commentators favor.

Many of the adverse comments that the Commission received on the proposal were submitted by entities who may be potential competitors of the Board if it builds its MSIL. While several of these commentators raised questions about the Board's authority to adopt rule G-36, generally commentators objected to the proposal on the grounds that it would impose too great a burden on competition with little or no offsetting benefits and at too high a cost.[10] For instance, Southern Municipal Finance Society ("SMFS") stated that it believes in the superiority of private enterprise approaches, and is fearful that the establishment of the Board's proposed central repository would inhibit the full competitive development of private whole document services, if not make them impossible.

A. MSRB Authority

The American Banker-Bond Buyer ("AB-BB"), Doty Research & Development Company ("Doty"), the NABL, the National Association of State Auditors, Comptrollers and Treasurers ("NASACT"), and J.J. Kenny Co., Inc. ("Kenny") expressed concern over whether the Board has the authority under the Act to adopt rule G-36 or to create the MSIL. Doty argues that, under section 15B(b)(2) of the Act,[11] "the Board's only role was established as the proposal and adoption of rules for dealers [and that n]o other authority is granted to the Board in the statute."[12] Doty, Kenny, NABL and NASACT also were concerned that the proposed rule change is in direct coflict with section 15B(d) and, in particular, the Tower Amendment, which prohibits the Board from imposing, directly or indirectly, any disclosure obligation on issuers.[13]

B. Competitive Effects of Rule G-36

The Commission requested that commentators address whether the proposal would impose any burden on competition not necessary or appropriate in furtherance of the purposes of the Act, including section 15B thereunder.[14] The Public Securities Association ("PSA") and Bloomberg Financial Markets ("Bloomberg") commented favorably. PSA stated that it does not believe that the Board's proposal would place an inappropriate burden on competition that would be inconsistent with the Act. Bloomberg also stated that it does not believe that any competitive disadvantages would result from proposed rule G-36.

On the other hand, several commentators expressed great concern over the potential competitive effect of the rule. For example, SMFS believes that the proposal would have a significant anti-competitive effect on competing vendors.

Both AB-BB and Kenny maintained that the timely availability of OSs, and thus investor protection, can be promoted most efficiently by improving the ability of information vendors to acquire documents. AB-BB argued that proposed rule G-36 will inhibit competition among information vendors and that this competitive burden is both unnecessary and inappropriate and, thus, inconsistent with the Act. It further believes that the Board should be specifically prohibited from engaging in direct competition with pre-existing information services because that competition could jeopardize indirectly other services of information providers. Thus, AB-BB recommends that: (1) The MSRB should have to compete the way vendors do for OSs; (2) Rule 15c2-12 should be amended to include nationally recognized municipal securities information repositories, or NRMSIRs, in the category of entities to whom underwriters are required to provide OSs under the Rule; and (3) the MSRB should not be designated as a NRMSIR.[15]

Kenny also believes that approval of proposed rule G-36 would impose a substantial competitive burden on those information vendors, including Kenny, who have been designated or are seeking designation as NRMSIRs. It argues that if NRMSIRs must pay the Board for information, then the Board necessarily will control the pricing structure and would be acting as a wholesaler of information. Kenny states that in order for any NRMSIR or any

[10] A number of commentators raised issues that the Commission believes either have been settled or will be more relevant, and therefore appropriately addressed, in other contexts. For example, NABL was concerned that the transmission of documents by underwriters may increase the class of people who can assert claims against the underwriter, and suggested that the Commission adopt a safe harbor rule under section 10(b) of the Act to establish that a party does not undertake any additional legal responsibility for the content of documents solely because that party transmitted the document to the Board. The Commission previously has raised and discussed concerns that the new obligations imposed on underwriters relating to issuer documents in some way alters their liability for the content of those documents. *See* Securities Exchange Act Release No. 26100 (September 22, 1988), 53 FR at 37788 to 37791. The Commission does not believe that rule G-36 would alter underwriters' responsibilities, and recommends that underwriters refer to the Rule 15c2-12 Adoption Release for guidance.

In addition a number of commentator raised several arguments against the Board's MSIL proposal, which is not the subject of this proposed rule change. These commentators asserted that the Board lacks the authority to build the MSIL, that the cost and complexity of the system that the Board is contemplating have not been justified, that the unreasonably high costs will be borne by the Board's information vendor competitors and municipal securities issuers who will have no control over those costs, and that the MSIL will impose a burden on competition. The Board's MSIL proposal will be the subject of a subsequent proposed rule change that will have to be filed under section 19(b) of the Act, and any comments on the MSIL proposal will be considered in that proceeding.

[11] Section 15B(b)(2) directs the Board to "propose and adopt rules to effect the purposes of this chapter with respect to transactions in municipal securities effected by brokers, dealers, and municipal securities dealers." 15 U.S.C. 78o-4.

[12] Doty, *The Role of the Municipal Securities Rulemaking Board and the Central Repository for Public Securities—Dealer Regulation of Market Regulation?* (December 28, 1989) (attached to Doty Letter), at 7. *See also* discussion at 25-23.

[13] Section 15B(d)(2) provides in part:

The Board is not authorized under this title to require any issuer of municipal securities, directly or indirectly, through a municipal securities dealer or otherwise, to furnish to the Board or to a purchaser or prospective purchaser of such securities any application, report, document, or information with respect to such issuer * * *

[14] Securities Exchange Act Release No. 27488 (November 30, 1989), 54 FR at 50547 n.1 and 50550. Section 15B(2)(C) of the Act requires that, before approving Board rules, the Commission find that the proposed rules do not "impose any burden on competition not necessary or appropriate in furtherance of the purpose of this title."

[15] The NRMSIR is a product of Rule 15c2-12, which was designed to, among other things, improve the dissemination of issuers' disclosure documents. The Commission developed the concept of a NRMSIR to permit underwriters who deliver OSs to these entities to shorten their obligation to deliver the OS to any potential customer upon request from 90 days to 25 days following the end of the underwriting period. *See* Adoption Release, *supra* n.2, at 28808.

In the notice of filing of the proposal, the Commission asked commentators to address whether the Commission should, if so requested, designate the Board a NRMSIR if rule G-36 is approved. At that time, the Commission anticipated that the Board would seek NRMSIR status. Since publication of the notice, the Board has indicated that it does not have any present intention of seeking NRMSIR status. This fact ameliorates, to some extent, the concerns that prompted the Commission to raise this issue in the notice. The Commission believes that if the Board is not designated as a NRMSIR, the same incentives that exist today for underwriters to submit OSs to one or more NRMSIRs will continue to exist. The Commission notes, however, that should the Board seek NRMSIR status in the future, the Commission would review its concerns and the commentators concerns and suggestions at that time.

information vendor to make a profit, investors will be charged at least as much as the Board charges, and NRMSIRs would be unable to compete directly with the Board because they would be required to purchase some, if not all, of their information from the Board.[16]

In his letter, Doty stated that he believes that the Board's proposal would be harmful to the promotion of issuer preparation and dissemination of documents. Doty believes that private competition is the best means of approaching the concept of a central repository and states that the "most notable disadvantage [to the Board's proposal] * * * lies in the inhibition and probable destruction of private competitive whole document dissemination services and the consequent discouragement of aggressive whole document marketing and usage."

C. Requirement to Submit OSs to Multiple Entities

NABL said that it would have difficulty supporting a requirement to deliver OSs to more than one repository; it believes that such a requirement would increase the burdens of compliance and would be impractical to implement.[17] At the same time, however, NABL acknowledged that this requirement would facilitate market access to information and would enhance competition. It suggested that, as an alternative, the Board could require that underwriters file multiple copies of documents, providing a single source for dissemination to NRMSIRs.

PSA stated that if competing private-sector repositories provide valuable services, then underwriters would readily forward disclosure documents to them. Thus, PSA concluded that there is no need to require underwriters to send OSs to any entity other than the MSRB, pursuant to rule G-36.

In contrast, the Government Finance Officers Association ("GFOA") stated that it is concerned that the Board's economic and regulatory power will combine to form a monopoly position and will impede the flow of information. It believes that preserving and fostering the flow of information in the municipal market is of vital importance and, therefore, concurred with Kenny's view that proposed rule G-36 should be amended to require delivery of documents to the Board and any NRMSIR.[18] GFOA stated that this multiple submission requirement is unlikely to present any meaningful burden because the number of NRMSIRs is likely to remain small. AB-BB and Kenny also argued that rule G-36 should be amended to require underwriters to submit documents to all NRMSIRs.[19]

D. Timeframes for Compliance with Rule G-36

First Southwest, NABL and PSA argued that rule G-36 should be amended to track the delivery time requirement in Rule 15c2-12, which ties delivery to the time the final OS becomes available to the underwriter.[20] These commentators were concerned that if the issuer does not fulfill the contractual commitment to deliver documents to the underwriter, under Rule 15c-12, the underwriter would violate rule G-36. They stated that, at a minimum, rule G-36 should provide relief for underwriters who are unable to comply for reasons beyond their control. First Southwest, NABL and PSA argued that an underwriter's obligations to ensure issuer compliance should be addressed separately and not tied to actual issuer compliance.

E. Public Access Facility

Kenny supported the concept of a public access facility over the Board's more expansive MSIL concept. Kenny also maintained that the needs of information vendors and the investing community would best be served by a public access facility, as described in the Board's proposal. Kenny supports the concept of the facility with next-day availability of documents and would be willing, if the Board's repository were limited to a public access facility, to express its support for rule G-36 and withdraw its earlier suggestion that rule G-36 be amended to require delivery of OSs to the Board and any NRMSIR.[21] Kenny emphasized, however, that this is not what the Board has proposed.

AB-BB also believes that there is a need for a public access facility.[22] Although it remains convinced that the Board's repository enterprise would damage competition among information vendors, it also believes that if the Board is permitted to develop a document collection and dissemination enterprise, then it is "appropriate and useful" for the Board to require underwriters to supply OSs to the public access facility. AB-BB is concerned about the future location of the facility and stated that it should be "accessible in practical terms." It also maintained that most documents should be available on a same-day basis. AB-BB stated that the Commission should not approve proposed rule G-36 unless the Board addresses these location and timeframe considerations. Finally, AB-BB stated that it believed that the Board does not recognize its vital role as the sole supplier of certain information to the market and that, in fact, the Board minimizes the role of the public access facility.

IV. Discussion

The Commission has determined to approve the Board's proposed rule change because it believes that the proposal is consistent with the Act, and in particular, section 15B(b)(2)(C), which authorizes the Board to adopt rules designed to prevent fraudulent and manipulative acts and practices, to foster cooperation and coordination with persons engaged in regulating transactions in municipal securities and, in general, to protect investors and the public interest. The Commission believes that rule G-36 will enable the Board to begin the process of developing a comprehensive collection of OSs for all new municipal securities issues, which should enhance the level of information dissemination, particularly among individual investors.

[16] In its comments on Amendment No. 1, Kenny repeated the concerns it expressed earlier that, among other things, proposed rule 6-36 is anti-competitive and that the Board is exceeding its statutory authority. Kenny believes that Commission action on rule G-36 would be premature because it would be a "stamp of approval" for the MSIL concept, which the Commission has not yet reviewed.

[17] First Southwest agreed, stating that it believes that requiring underwriters to deliver documents to more than one repository would result in duplicative costs and would be an excessive and unnecessary burden.

[18] Kenny first expressed this view to the Board in response to the Board's solicitation of comment on proposed rule G-36. *See* Letter from J. Kevin Kenny, President and Chief Executive Officer, J.J. Kenny Co., Inc., to Diane G. Klinke, Deputy General Counsel, MSRB, dated October 6, 1989.

[19] Kenny stated that requiring documents to be sent to all NRMSIRs is advisable because: (1) There are only three NRMSIRs now; and (2) if all NRMSIRs were to receive OSs, there would be no need for an expensive electronic link.

[20] Proposed rule G-36 requires dealers to deliver documents to the Board within one business day after receipt, but no later than 10 business days after any final agreeemnt to purchase, offer or sell the municipal securities. Rule 15c2-12 requires that underwriters contract with the issuer to receive, within seven business days after any final agreement to purchase, offer or sell, a sufficient number of OSs. If an issuer fails to meet its contractual obligation under Rule 15c2-12, then the dealer might not be able to comply with the proposed rule G-36 requirements and such noncompliance might result in a vioaltion of rule G-36.

[21] *See* letter from J.J. Kenny Co., Inc., dated December 27, 1989.

[22] Letter from Joseph V. Riccobono, Executive Vice President, American Banker-Bond Buyer, to Jonathan G. Katz, Secretary, SEC, dated March 27, 1990.

A. MSRB Authority to Create Repository

Four commentators questioned whether the Board possesses the authority to adopt rule G–36 and to establish a repository to which underwriters would submit documents. Regardless of the Commission's views on the merits of the Board's MSIL proposal and of the Commission's final determination on that proposal, the Commission believes that the Board's plans to collect OSs for public use is meritorious and furthers the Commission's objective of encouraging greater dissemination of municipal securities information. The Commission thus believes that the proposed rule change represents a proper exercise of the Board'sa statutory authority, pursuant to section 15B(b)(2)(C) of the Act.

1. Scope of Section 15B Under the Act

As noted above, Doty argued that rule G–36, as well as the Board's proposed repository, exceeds the Board's authority under section 15B. The Commission, however, disagrees with this limited reading of the statute. As even Doty conceded, section 15B(B)(2)(C) is a broad grant of authority to the Board,[23] which the Commission believes provides ample authority for rule G–36.

Because of the increasing complexity of the municipal securities market, it is essential that professionals and investors have access to complete and timely descriptive information about municipal securities and municipal securities issuers. The Commission believes that the information contained in OSs is valuable to investors and should be widely available. The Commission further believes that rule G–36, to the extent that it enhances information dissemination of new issue municipal securities, is designed to prevent fraudulent and manipulative acts and practices and to protect investors and the public interest.

2. The Tower Amendment

In 1975 when Congress established the MSRB, it quite explicitly defined the limits of the Board's authority in the so-called "Tower Amendment," section 15B(d)(2) of the Act. That section prohibits the Board from requiring municipal issuers, directly or indirectly, through municipal securities dealers or otherwise, to furnish the MSRB or prospective investors with any documents, including OSs. The MSRB specifically is permitted, however, to require that OSs or other documents that are available from sources other than the issuer, such as the underwriter, be provided to investors.

Rule G–36 was carefully crafted to conform with the Board's statutory authority: For offerings subject to Rule 15c2–12, rule G–36 requires that underwriters only submit those OSs to the Board that they are required by Rule 15c2–12 to obtain from issuers.[24] For offerings not covered by Rule 15c2–12 because they are under the monetary threshold of $1,000,000, rule G–36 requires that underwriters submit OSs only if they already have been prepared by or on behalf of the issuer. For offerings exempt by subsection (c) of Rule 15c2–12 (*i.e.*, certain private offerings and short-term offerings), rule G–36 does not require underwirters to provide OSs to the Board.

Rule 15c2–12 was a lawfully promulgated Commission rule that addresses regulatory concerns pertaining to the obligations of underwirters to obtain OSs and provide them to the public pursuant to a Commission rule, it would strain the language of the Tower Amendment to suggest that that provision prevents the MSRB from promulgating a separate rule requiring underwriters to make a copy of the OSs available to the Board. Rule G–36 imposes no additional requirement, directly or indirectly, on issuers. Thus, the Commission believes that rule G–36 is not in conflict with the delicate balance Congress sought to achieve in section 15B between the need to grant the Board authority to carry out the important investor protection objectives of the Act and the concerns over comity among various levels of government.

B. Competitive Effect of Rule G–36

Section 15B(b)(2)(C) of the Act requires that, before approving Board rules, the Commission find that the proposed rules do not "impose any burden on competition not necessary or appropriate in furtherance of the purpose of this title."[25] The Commission has examined closely the potential anti-competitive effect of rule G–36 and has determined that the proposed rule change does not impose a burden on competition not necessary or appropriate in furtherance of the purposes of the Act.[26]

The Commission believes that rule G–36 will permit the MSRB to gather information, which it will then make available to any requestor, including any of its potential competitors. In addition, the Commission agrees with the PSA's observation that if competing private information vendors are providing services that the industry deemas to be valuable, then the industry will continue to provide those vendors with OSs. Thus, the Commission believes that the proposal should not adversely effect the ability or willingness of private information vendors to create and market value-added services.

In Amendement No. 1 to the filing, the Board proposed to establish a public access facility, which will be open to the public and through which documents will be available for copying within one business day of their receipt by the Board. While the Commission believes the public access facility will provide more immediate access to OSs submitted to the Board, the Commission strongly encourages the Board to make

[23] Doty Letter, *supra* note 15. Section 15B(b)(2)(C) provides that the Board's rules shall: be designed to prevent fraudulent and manipulative acts and practices, to promote just and equitable principles of trade, to foster cooperation and coordination with persons engaged in regulating, clearing, settling, processing information with respect to, and facilitating transactions in municipal securities, to remove impedements to and perfect the mechanism of a free and open market in municipal securities, and, in general, to protect investors and the public interest; and not be designed to permit unfair discrimination between customers, issuers, municipal securities brokers, or municipal securities dealers, to fix minimum profits, to impose any schedule or fix rates of commissions, allowances, discounts, or other fees to be charged by municipal securities brokers or municipal securities dealers, to regulate by virtue of any authority conferred by this title matters not related to the purposes of this title or the administration of the Board, or to impose any burden on competition not necessary or appropriate in furtherance of the purpose of this title.

[24] The Commission already has addressed the issue of Rule 15c2–12's consistency with the Tower Amendment. *See* Securities Exchange Act Release No. 26100 (September 22, 1988), 53 FR 37778, at 37786.

[25] *Cf. Bradford Nat'l Clearing Corp.* v. *SEC*, 590 F.2d 1085 (D.C. Cir. 1978); and *Clement* v. *SEC*, 674 F.2d 641 (7th Cir. 1982). In addition, section 23(a)(2) of the Act requires the Commission, in adopting rules under the Act, to consider the anti-competitive effects of such regulation and to balance any anti-competitive impact against the regulatory benefits gained in furthering the purposes of the Act.

[26] As noted above, the Board has no present intention of seeking NRMSIR status. The Commission considered this factor in balancing any competitive burdens against the benefits of the rule and believes that this fact ameliorates concerns over the potential anti-competitive effect of rule G–36 because the same incentives that exist today for underwriters to submit OSs to one or more NRMSIRs will continue to exist. Should the Board determine to seek NRMSIR status, the Commission specifically would consider the competitive implications of a favorable determination on that request. In addition, if the Commission were to conclude that MSRB status as NRMSIR might have adverse competitive implications, the Commission would consider whether it should take any action to address these effects For example, the Commission might consider whether amendments to Rule 15c2–12 or rule G–36 would be necessary or appropriate to reduce any competitive burden anticipated to result from the Board's prospective NRMSIR status.

every effort to make OSs available in the public access facility on a same-day basis.[27] In addition, the Commission believes that the Board should be prepared to compile an index of all OSs submitted to the Board pursuant to rule G-36 on a real-time basis and to make that index immediately available to requestors.

C. Requirement to Submit OSs to Multiple Entities

As described above, the commentators were split on whether rule G-36 should be amended to require the submission of documents to both the Board and NRMSIRs designated under Rule 15c2-12. The Commission has decided to defer to the Board's decision not to amend rule G-36 to include this requirement. The Commission believes that mandatory multiple deliveries may impose unnecessary costs on dealers. Moreover, the Commission believes that the flow of OSs to NRMSIRs should not change significantly because the incentive to submit OSs to NRMSIRs created by Rule 15c2-12 will continue to exist. Rule 15c2-12 permits underwriters who deliver OSs to a NRMSIR to shorten their delivery requirement from 90 days to 25 days following the end of the underwriting period. Thus, the Commission believes that even if underwriters are required to submit OSs to the Board, they will continue to submit those documents to NRMSIRs voluntarily to shorten their delivery obligations.

D. Cost of Implementing Rule G-36 and the MSIL

Several commentators expressed concern over the cost of implementing rule G-36 and the Board's proposed MSIL and the fact that those costs will be recouped through increased underwriting fees. The Commission believes that, having concluded that rule G-36 is consistent with the Act and that it should provide significant benefits to the minicipal securities market, it is appropriate for the Board to recop the cost of implementing that rule. The proposed MSIL, and the cost of building that project, will be the subject of a future rule filing by the Board.[28]

E. Timeframes for Compliance with Rule G-36

As noted above, some commentators were concerned about the potential to violate rule G-36 by failing to submit OSs to the MSRB within the 10-day time frame established by rule G-36 even though the underwriter had taken all reasonable steps to comply. These commentators were concerned that underwriters would be held responsible for issuers' failure to comply with the terms of their contracts to supply the underwriter with OSs. The Commission is sympathetic with this concern but does not believe that further amendments to rule G-36 are required.

In proposing rule G-36 the MSRB stated that "[it] believes that dealers should not be subject to a rule violation for something outside of their control; however, it is important that issuers and underwriters do everything possible to ensure that the issuer is able to comply with its contractual requirement to provide final OSs in a timely fashion." Accordingly, the Commission expects that those SROs charged with enforcing rule G-36 will take into consideration whether the underwriter has taken adequate steps to meet the time frame in rule G-36. At the same time, however, the Commission believes that the delivery timeframes of rule G-36 are sufficient and that, if anything, they should result in greater cooperation between underwriters and issuers to ensure that disclosure documents are disseminated in a timely manner.

V. Conclusion

The Commission has examined the Board's proposal and Amendment No. 1 in light of the standards cited in sections 15B(b) and 23(a) and concludes, for the reasons stated above, that the proposed rule change is consistent with the Act.

It is therefore ordered, pursuant to section 19(b)(2) of the Act, that the proposed rule change described above be, and hereby is, approved. Furthermore, the Commission hereby delays the effectiveness of rule G-36 for a period of 30 days following the date of this order.

By the Commission.

Dated: June 1, 1990.

Margaret H. McFarland,

Deputy Secretary.

[FR Doc. 90-13220 Filed 6-6-90; 8:45 am]

BILLING CODE 8010-01-M

[27] AB-BB also was concerned about the future location of the facility and stated that it should be "accessible in practical terms." The Commission believes that the proposed location of the facility at the Board's offices in Washington, DC will be reasonably accessible. Although the future location of the facility is not currently an issue before the Commission, the Board would have to submit a description of any contemplated future location to the Commission for its approval, and the Commission would require that such location be reasonably accessible to the general public, including NRMSIRs.

[28] When the Board submits that rule filing, the Commission will incorporate by reference the comment letters received in response to rule G-36 and will address the cost issue, among other concerns at that time. In addition to its initial filing of the MSIL proposal with the Commission, the Board would be required, under section 19(b)(1) of the Act, to file any changes to the MSIL, as well as any fees charged by the Board in connection with the operation of the MSIL. Moreover, when an SRO is competing with private-sector information vendors, the Commission's long-standing policy is to require that the SRO's fees be cost-based. *See e.g.*, Securities Exchange Act Release No. 20874 (April 17, 1984), 49 FR 17640, *affd, NASD* v. *SEC*, 801 F.2d 1415 (D.C. Cir. 1986)

TENNESSEE VALLEY AUTHORITY

Adoption of Final Environmental Impact Statement

AGENCY: Tennessee Valley Authority (TVA).

ACTION: Adoption of final environmental impact statement.

SUMMARY: In accordance with TVA procedures implementing the National Environmental Policy Act (NEPA) and consistent with 40 CFR 1506.3 (1989), TVA has adopted the Office of Surface Mining Reclamation and Enforcement's (OSMRE) final environmental impact statement (FEIS), Comprehensive Impacts of Permit Decisions Under the Tennessee Federal Program (OSM-EIS-18). Notice of the availability of the FEIS was published by OSMRE in the **Federal Register** on March 22, 1985 (50 FR 1160).

TVA has determined that the FEIS adequately assesses the potential cumulative environmental impacts of coal leasing decisions TVA may make respecting its coal properties in Tennessee, that the proposed actions assessed by the FEIS are substantially the same as those which may occur under TVA's coal leasing program, and that the FEIS is still generally available to the public.

ADDRESSES: The FEIS can be inspected by the public at the following places:

TVA Technical Library, East Tower Building, 400 West Summit Hill Drive, Knoxville, Tennessee 37902.

TVA Technical Library, Signal Place, 1101 Market Street, Chattanooga, Tennessee 37402.

TVA Technical Library, A100 National Fertilizer and Environmental Research Center, Muscle Shoals, Alabama 35660.

Copies of the statement will be forwarded to any interested person or agency upon written request to TVA Environmental Quality Staff, 400 West Summit Hill Drive, SPB 2S 201P, Knoxville, Tennessee 37902.

FOR FURTHER INFORMATION CONTACT: Write to M. Paul Schmierbach, Manager of Environmental Quality, Tennessee Valley Authority, 400 Summit Hill Drive,

SPB 2S 201P, Knoxville, Tennessee 37902.

SUPPLEMENTARY INFORMATION: In March 1985, OSMRE filed with the United States Environmental Protection Agency and made available to the public an FEIS assessing the potential environmental impacts of decisions OSMRE may make on coal mining permit applications in Tennessee. The FEIS used representative model mines to evaluate the range of impacts associated with the coal mining that could result if permits were issued. It was determined that the collective approval of permits would not result in significant cumulative environmental impacts in the Cumberland Block and Wartburg Basin regions, which encompasses TVA's Koppers coal properties in Tennessee.

TVA acquired various coal and associated surface rights from 1961 through 1985 to ensure an adequate supply of fuel for its fossil-fueled power plants. TVA's Koppers coal property, which consists of 52,941 acres of coal and associated surface right within the Wartburg Basin and Cumberland Block regions, was purchased by TVA in 1962 from the Koppers Company. This property is approximately 35 miles northwest of Knoxville and lies principally in Campbell County, Tennessee, with a small portion in Scott County. TVA does not own the surface, but the associated surface rights include the right to mine and remove coal by any mining process and to use so much of the surface of said land as may be necessary to effect such mining and removal. Surface interest is held in large tracts by private landowners. These surface owners can engage in activities which impact surface features and the environment without TVA's approval or involvement.

TVA's proposed action is to sell at public auction to the highest bidder conditional coal leases, including associated surface rights on the Koppers property. Lessees would have all rights, privileges, and easements which TVA holds and would assume all of TVA's duties and responsibilities under TVA's deed. The actual leasing of coal rights is a legal transaction and would itself result in no physical environmental impacts. However, leasing, as would OSMRE's permitting action, could lead to mining which would have physical impacts. Such indirect or secondary effects would be considered before a decision is made on whether mining should be allowed. Any leases issued by TVA would include conditions that allow mining to proceed only after additional site-specific NEPA review. Such site-specific reviews could use the detailed information in the mining and reclamation plans which coal lessees would be required to submit to TVA for approval. OSMRE also committed to conducting site-specific reviews in the FEIS, and TVA hopes to cooperate with OSMRE on these reviews when TVA coal properties are involved. TVA would, in its coal leases, also require a lessee to comply with all applicable local, state, and federal environmental laws and regulations. TVA would also expressly reserve the right to require more in the way of environmental safeguards than required by existing environmental laws if TVA deems this necessary with a particular lease.

Leasing TVA's Koppers properties could result in the mining of over 25 million tons of coal. TVA estimates that over the next 10 to 15 years there could be 5 to 10 relatively small leases, i.e., less than 1,000 acres, and 2 to 3 larger leases sold. A lessee may operate more than one mine. Because some of these mines will be underground, total surface disturbance will be less than the total leased acreage.

TVA estimates that leasing all of the Koppers property could produce approximately $50 million in revenues for TVA. These revenues will assist TVA in its efforts to maintain low rates for electricity consumers in the TVA region. In addition, mining of TVA coal underlying the Koppers property should stimulate the local economy for the duration of the mining and should help to revitalize the mining industry in the region.

Three alternatives to the proposed leasing of all of the Koppers property were considered by TVA: (1) Sell coal leases and associated surface rights but limit the degree of concurrent mining, (2) sell coal leases and associated surface rights with restrictions on the types of mining methods used, and (3) no action. Limiting concurrent mining or restricting mining methods would result in less than maximum recovery of the coal resource, less revenue from coal royalties, and fewer jobs created. More importantly, the FEIS concluded that cumulative impacts from mining which could occur in the Cumberland Block and Wartburg regions (encompassing the Koppers property) are not likely to be significant regardless of the mining method. The no-action alternative would temporarily avoid the potential environmental impacts of mining, but this alternative would not produce any revenue for TVA or contribute to the revitalization of the mining and satellite industries in the region.

TVA has thoroughly reviewed the FEIS and has determined that it adequately assesses the types of mining that could be used in development of the Koppers property under the alternatives described above. Such mining methods include underground, area, contour, mountain top removal, and auger mining. The FEIS describes the entire coal mining and transportation cycle. Since the release of the FEIS in 1985, only 2995 surface acres have been disturbed by mining in the Wartburg Basin and Cumberland Block regions. OSMRE projected that 9,425 acres would be disturbed in this time period; thus, impacts have been less than projected. During this same 5-year period, only exploration drilling has occurred on TVA's Koppers property. Accordingly, TVA adopts the OSMRE FEIS as TVA's FEIS.

Working with its coal lessees and OSMRE, TVA intends to ensure that coal mining activities which could result from the leasing of TVA coal reserves are conducted in an environmentally acceptable manner.

M. Paul Schmierbach,

Manager, Environmental Quality.

Prepared by Cynthia R. Britt (RES DEV), Gregory A. Brodie (POWER), and Dale K. Fowler with concurrence by Gregory R. Signer (GC)

[FR Doc. 90-13123 Filed 6-6-90; 8:45 am]

BILLING CODE 8120-01-M

DEPARTMENT OF TRANSPORTATION

Saint Lawrence Seaway Development Corporation

Advisory Board Meeting

Pursuant to section 10(a)(2) of the Federal Advisory Committee Act (Pub. L. 92-463; 5 U.S.C. App. I) notice is hereby given of a meeting of the Advisory Board of the Saint Lawrence Seaway Development Corporation, to be held at 11 a.m., June 27, 1990, at the Corporation's Massena, New York Offices, 180 Andrews Street, Massena, New York. The agenda for this meeting will be as follows: Opening Remarks, Consideration of Minutes of Past Meeting; Review of Programs; Business; and Closing Remarks.

Attendance at meeting is open to the interested public but limited to the space available. With the approval of the Administrator, members of the public may present oral statements at the meeting. Persons wishing further information should contact not later than, June 20, 1990, Marc C. Owen, Advisory Board Liaison; Saint Lawrence Seaway Development Corporation, 400

Seventh Street, SW., Washington, DC 20590; 202/366-0091.

Any member of the public may present a written statement to the Advisory Board at any time.

Issued at Washington, DC on June 1, 1990.

Marc C. Owen,

Advisory Board Liaison.

[FR Doc. 90-13198 Filed 6-6-90; 8:45 am]

BILLING CODE 4910-61-M

Coast Guard

[CGD 90-040]

Lower Mississippi River Waterway Safety Advisory Committee Meeting

Pursuant to section 10(a) of the Federal Advisory Committee Act (Pub. L. 92-403; 5 U.S.C. App I) notice is hereby given of a meeting of the Lower Mississippi River Waterway Safety Advisory Committee. The meeting will be held on Tuesday, July 10, 1990, in the 29th Floor Boardroom of the World Trade Center, 2 Canal Street, New Orleans, Louisiana at 9 a.m. The agenda for the meeting consists of the following items:

1. Call to Order.
2. Minutes of the April 17, 1990 meeting.
3. Update on past resolutions.
   A. Bridge-to-Bridge Radiotelephone Act.
   B. Proposed FM Channel 13/67 Boundaries.
   C. Belmont Anchorage.
4. Report from the VTS Subcommittee.
5. New Business.
6. Adjournment.

The purpose of this Advisory Committee is to provide consultation and advice to the Commander, Eighth Coast Guard District on all areas of maritime safety affecting this waterway.

The meeting is open to the public. Members of the public may present written or oral statements at the meeting.

Additional information may be obtained from Commander C.T. Bohner, USCG, Executive Secretary, Lower Mississippi River Waterway Safety Advisory Committee, c/o Commander Eighth Coast Guard District (oan) room 1209, Hale Boggs Federal Building, 501 Magazine Street, New Orleans, LA 70130-3396, telephone number (504) 589-3074.

Dated: May 23, 1990.

W.F. Merlin,

Rear Admiral, U.S. Coast Guard, Commander, Eighth Coast Guard District.

[FR Doc. 90-13145 Filed 6-6-90; 8:45 am]

BILLING CODE 4910-14-M

DEPARTMENT OF THE TREASURY

Public Information Collection Requirement Submitted to OMB for Review

Date: June 1, 1990

The Department of Treasury has submitted the following public information collection requirements(s) to OMB for review and clearance under the Paperwork Reduction Act of 1980, Pub. L. 96-511. Copies of the submission(s) may be obtained by calling the Treasury Bureau Clearance Officer listed. Comments regarding this information collection should be addressed to the OMB reviewer listed and to the Treasury Department Clearance Officer, Department of the Treasury, Room 2224, 1500 Pennsylvania Avenue NW., Washington, DC 20220.

Internal Revenue Service

OMB Number: 1545-0057.

Form Number: 1024 and Related Schedules.

Type of Review: Extension.

Title: Application for Recognition of Exemption Under section 501(a) or for Determination Under section 120.

Description: Organizations wanting to be exempt from Federal income tax under section 501(a) as an organization described in most paragraphs of section 501(c), or a legal service plan described in section 120, must apply to IRS for a determination or ruling letter. The information collected is used to determine whether the organization qualifies for exempt status..

Respondents: Non-profit institutions.

Estimated Number of Respondents: 16,088.

Estimated Burden Hours per Response/ Recordkeeping:

Form	Recordkeeping	Learning about the law or the form	Preparing and sending the form to IRS
1024	52 hrs., 51 min.	2 hrs., 45 min.	4 hrs., 56 min.
1024, Sch. A	58 min.	18 min.	19 min.
1024, Sch. B	1 hr., 40 min.	18 min.	20 min.
1024, Sch. C	58 min.	12 min.	13 min.
1024, Sch. D	4 hrs., 4 min.	18 min.	22 min.
1024, Sch. E	1 hr., 4 min.	18 min.	20 min.
1024, Sch. F	2 hrs., 9 min.	6 min.	8 min.
1024, Sch. G	1 hr., 55 min.	6 min.	8 min.
1024, Sch. H	1 hr., 40 min.	6 min.	8 min.
1024, Sch. I	5 hrs., 30 min.	30 min.	37 min.
1024, Sch. J	2 hrs., 23 min.	6 min.	8 min.
1024, Sch. K	3 hrs., 21 min.	6 min.	10 min.
1024, Sch. L	3 hrs., 7 min.	24 min.	28 min.
1024, Sch. M	1 hr., 20 min.	12 min.	13 min.

Frequency of Response: On occasion.

Estimated Total Recordkeeping/ Reporting Burden: 1,021,303 hours.

OMB Number: 1545-0184.

Form Number: 4797.

Type of Review: Extension.

Title: Sales of Business Property.

Description: Form 4797 is used by taxpayers to report sales, exchanges, or involuntary conversions of assets, other than capital assets, and involuntary conversions of capital assets held more than one year. It is also used to compute ordinary income from recapture and the recapture of prior year section 1231 losses.

Respondents: Individuals or households, Farms, Businesses or other for-profit.

Estimated Number of Respondents: 1,396,388.

Estimated Burden Hours Per Response/ Recordkeeping:

Recordkeeping—30 hours, 37 minutes.

Learning about the law or the form—11 hours, 17 minutes.

Preparing the form—16 Hours, 56 minutes.

Copying, assembling, and sending the form to IRS—1 hour, 20 minutes.

Frequency of Response: Annally.

Estimated Total Recordkeeping/ Reporting Burden: 84,006,702 hours.

Clearance Officer: Garrick Shear (202) 535-4297, Internal Revenue Service, Room 5571, 1111 Constitution Avenue NW., Washington, DC 20224.
OMB Reviewer: Milo Sunderhauf (202) 395-6880, Office of Management and Budget, Room 3001, New Executive Office Building, Washington, DC 20503.

Lois K. Holland,
Departmental Reports, Management Officer.
[FR Doc. 90-13200 Filed 6-6-90; 8:45 am]
BILLING CODE 4830-01-M

Public Information Collection Requirements Submitted to OMB for Review

May 31, 1990.

The Department of Treasury has submitted the following public information collection requirement(s) to OMB for review and clearance under the Paperwork Reduction Act of 1980, Public Law 96-511. Copies of the submission(s) may be obtained by calling the Treasury Bureau Clearance Officer listed. Comments regarding this information collection should be addressed to the OMB reviewer listed and to the Treasury Department Clearance Officer, Department of the Treasury, room 2224, 1500 Pennsylvania Avenue, NW., Washington, DC 20220.

Internal Revenue Service

OMB Number: 1545-0145
Form Number: 2439
Type of Review: Extension
Title: Notice to Shareholder of Undistributed Long-Term Capital Gains
Description: Form 2439 is sent by regulated investment companies to their shareholders to report undistributed capital gains and the amount of tax paid on these gains designated under Internal Revenue Code section 852(b)(3)(D). Both the company and shareholder file copies of Form 2439 with IRS. IRS uses the information to check shareholder compliance
Respondents: Businesses or other for-profit
Estimated Number of Respondents: 100
Estimated Burden Hours Per Response/ Recordkeeping:
Recordkeeping—1 hour, 55 minutes
Learning about the law or the form—6 minutes
Preparing and sending the form to IRS—8 minutes
Frequency of Response: Annually
Estimated Total Recordkeeping/ Reporting Burden: 21,500 hours

OMB Number: 1545-0865
Form Number: 8264
Type of Review: Revision
Title: Application for Registration of a Tax Shelter.
Description: Organizers of certain tax shelters are required to register them with the IRS using Form 8264. (Other persons may have to register the tax shelter if the organizer doesn't.) We use the information to give the tax shelter a registration number. Sellers of interests in the tax shelter furnish the number to investors who report the number on their tax returns
Respondents: Individuals or households, businesses or other for-profit, small businesses or organizations
Estimated Number of Respondents: 2,400
Estimated Burden Hours Per Response/ Recordkeeping:
Recordkeeping—33 hours, 14 minutes
Learning about the form—2 hours, 53 minutes
Preparing, copying, assembling, and sending the form to IRS—3 hours, 33 minutes
Frequency of Response: On occasion
Estimated Total Recordkeeping/ Reporting Burden: 95,208 hours

OMB Number: 1545-0879
Form Number: None
Type of Review: Extension
Title: Certain Returned Magazines, Paperbacks, or Records
Description: The regulations provide rules relating to an exclusion from gross income for certain returned merchandise. The regulations provide that in addition to physical return of the merchandise, a written statement listing certain information may constitute evidence of the return. Taxpayers who receive physical evidence of the return may, in lieu of retaining physical evidence, retain documentary evidence of the return. Taxpayers in the trade or business of selling magazines, paperbacks, or records, who elect to use a certain method of accounting, are affected
Respondents: Businesses or other for-profit
Estimated Number of Recordkeepers: 1
Estimated Burden Hours Per Recordkeeper: 1
Frequency of Response: Other
Estimated Total Recordkeeping Burden: 1 hour

OMB Number: 1545-0930
Form Number: 8396
Type of Review: Extension
Title: Mortgage Interest Credit
Description: Used by individual taxpayers to claim a credit against their tax for a portion of the interest paid on a home mortgage in connection with a qualified mortgage credit certificate. Internal Revenue Code section 25 allows the credit and Internal Revenue Code section 165(g) provides that the interest deduction on Schedule A will be reduced by the credit
Respondents: Individuals or households
Estimated Number of Respondents: 30,000
Estimated Burden Hours Per Response/ Recordkeeping:
Recordkeeping—46 minutes
Learning about the law or the form—4 minutes
Preparing the form—28 minutes
Copying, assembling, and sending the form to IRS—14 minutes
Frequency of Response: Annually
Estimated Total Recordkeeping/ Reporting Burden: 45,900 hours

OMB Number: 1545-1029
Form Number: 8693
Type of Review: Extension
Title: Low-Income Housing Credit Disposition Bond
Description: Form 8693, Low-Income Housing Credit Disposition Bond, is needed per Internal Revenue Code section 42(j)(6) to post bond and waive the recapture requirement under section 42(j) in the case of disposition of a building on which the low-income housing credit was claimed. Internal Revenue regulations § 301.7101-1 requires that the posting of a bond must be done on the appropriate form as determined by the Internal Revenue Service
Respondents: Individuals or households, businesses or other for-profit, small businesses or organizations
Estimated Number of Respondents: 5,000
Estimated Burden Hours Per Response/ Recordkeeping:
Recordkeeping—13 minutes
Learing about the law or the form—14 minutes
Preparing, copying, assembling, and sending the form to IRS—38 minutes
Frequency of Response: On occasion
Estimated Total Recordkeeping/ Reporting Burden: 5,500 hours

Clearance Officer: Garrick Shear, (202) 535-4297, Internal Revenue Service, room 5571, 1111 Constitution Avenue, NW., Washington, DC 20224
OMB Reviewer: Milo Sunderhauf, (202) 395-6880, Office of Management and Budget, room 3001, New Executive Office Building, Washington, DC 20503

Lois K. Holland,
Department Reports, Management Officer.
[FR Doc. 90-13205 Filed 6-6-90; 8:45 am]
BILLING CODE 4830-01-M

Office of the Secretary

[Supplement to Department Circular—Public Debt Series—No. 16-90]

Treasury Notes, Series L-1995

Washington, May 25, 1990.

The Secretary announced on May 24, 1990, that the interest rate on the notes designated Series L-1995, described in Department Circular—Public Debt Series—No. 16-90 dated May 17, 1990, will be 8½ percent. Interest on the notes will be payable at the rate of 8½ percent per annum.

Gerald Murphy,

Fiscal Assistant Secretary.

[FR Doc. 90-13115 Filed 6-6-90; 8:45 am]

BILLING CODE 4810-40-M

[Supplement to Department Circular—Public Debt Series—No. 15-90]

Treasury Notes, Series Z-1992

Washington, May 24, 1990.

The Secretary announced on May 23, 1990, that the interest rate on the notes designated Series Z-1992, described in Department Circular—Public Debt Series—No. 15-90 dated May 17, 1990, will be 8½ percent. Interest on the notes will be payable at the rate of 8½ percent per annum.

Gerald Murphy,

Fiscal Assistant Secretary.

[FR Doc. 90-13114 Filed 6-6-90; 8:45 am]

BILLING CODE 4810-40-M

DEPARTMENT OF VETERANS AFFAIRS

Scientific Review and Evaluation Board for Rehabilitation Research and Development, Meeting

In accordance with Public Law 92-463, the Department of Veterans Affairs gives notice of a meeting of the Scientific Review and Evaluation Board for Rehabilitation Research and Development. This meeting will convene at the Vista International Hotel, 1400 M Street NW., Washington, DC August 21 through August 24, 1990. The session on August 21, 1990, is scheduled to begin at 6:30 p.m. and end at 10:30 p.m. The sessions on August 22, 23, and 24, 1990, are scheduled to begin at 8 a.m. and end at 5 p.m. The purpose of the meeting is to review rehabilitation research and development applications for scientific and technical merit and to make recommendations to the Director, Rehabilitation Research and Development Service, regarding their funding.

The meeting will be open to the public (to the seating capacity of the room) for the August 21 session for the discussion of administrative matters, the general status of the program, and the administrative details of the review process. On August 22-24, 1990, the meeting is closed during which the Board will be reviewing research and development applications.

This review involves oral comments, discussion of site visits, staff and consultant critiques of proposed research protocols, and similar analytical documents that necessitate the consideration of the personal qualifications, performance and competence of individual research investigators. Disclosure of such information would constitute a clearly unwarranted invasion of personal privacy. Disclosure would also reveal research proposals and research underway which could lead to the loss of these projects to third parties and thereby frustrate future agency research efforts.

Thus, the closing is in accordance with 5 U.S.C. 552b(c)(6), and (c)(9)(B) and the determination of the Secretary of the Department of Veterans Affairs under sections 10(d) of Public Law 92-463 as amended by section 5(c) of Public Law 94-409.

Due to the limited seating capacity of the room, those who plan to attend the open session should contact Mr. Jon Peters, Program Manager, Rehabilitation Research and Development Service, Department of Veterans Affairs Central Office, 810 Vermont Avenue, NW., Washington, DC 20420, (Phone: 202-233-5177) at least five days before the meeting.

Dated: May 31, 1990.

By direction of the Secretary.

Sylvia Chavez Long,

Committee Mangement Officer.

Department of Veterans Affairs Scientific Review and Evaluation Board Rehabilitation Research and Development Washington, DC, August 21-24, 1990

Tentative Agenda

Tuesday, August 21, 1990

6:30 p.m.: Greetings, Orientation and Program Overview Margaret J. Giannini, M.D. Director, Rehabilitation Research and Development Service

8 p.m.: Administrative Procedures Ernest Burgess, M.D., Board Chairman

9-10:30 p.m.: Meeting with Panel Chairpersons

Prosthetics/Amputations, Spinal Cord Injury, Communication, Sensory and Cognitive Aids, Aging, Schizophrenia

10:30 p.m.: Adjourn

Wednesday, August 22, 1990

8 a.m.-5 p.m.: Proposal Review and Preparation of Merit Review Board by Subcommittees

12 p.m.-1:30 p.m.: Lunch (Working Meeting)

5 p.m.: Adjourn

Thursday, August 23, 1990

8 a.m.-4 p.m.: Review of Proposals by Subcommittees:

Prosthetics/Amputations, Spinal Cord Injury, Communication, Sensory and Cognitive Aids, Aging, Schizophrenia

12 p.m.-1:30 p.m.: Lunch (Working Meeting)

1:30 p.m.-5 p.m.: Summary Session and Reconvening of the Board for Summary Statements from Subcommittees Closing Remarks by Board Chairperson

5 p.m.: Adjourn

Friday, August 24, 1990

8 a.m.-11:30 a.m.: Final Revision of Summart Statements by Panel Members

11:30 a.m.-1:30 p.m.: Lunch (Working Meeting)

1:30 p.m.-3 p.m.: Meeting of Individual Panel Chairperson with Director of Rehab R&D to Review Final Summary Statements

Special Notes

All times are approximate.

The general business portion of the meeting (6:30 p.m.-10:30 p.m. on August 21, 1990) will be briefly open to the public. The remainder of the meeting, August 22-24, will be closed to the public with the provisions set forth in section 552(b), subsections (c)(6), and (c)(9)(B), title 5, United States Code and the determination of the Secretary of the Department of Veterans Affairs pursuant to section 10(d) the Federal Advisory Committee Act, title 5, U.S.C., Appendix I.

[FR Doc. 90-13255 Filed 6-6-90; 8:45 am]

BILLING CODE 8320-01-M

Wage Committee; Meetings

The Department of Veterans Affairs (VA) in accordance with Public Law 92-463, gives notice that meetings of the VA Wage Committee will be held on:

Wednesday, July 11, 1990, at 2 p.m.
Wednesday, July 25, 1990, at 2 p.m.
Wednesday, August 8, 1990, at 2 p.m.
Wednesday, August 22, 1990, at 2 p.m.

Wednesday, September 5, 1990, at 2 p.m.
Wednesday, September 19, 1990, at 2 p.m.

The meetings will be held in Room 300, Veterans Affairs Central Office, 810 Vermont Avenue, NW., Washington, DC 20420.

The Committee's purpose is to advise the Chief Medical Director on the development and authorization of wage schedules for Federal Wage System (blue-collar) employees.

At these meetings the Committee will consider wage survey specifications, wage survey data, local committee reports and recommendations, statistical analyses, and proposed wage schedules.

All portions of the meetings will be closed to the public because the matters considered are related solely to the international personnel rules and practices of the Department of Veterans Affairs and because the wage survey data considered by the Committee have been obtained from officials of private business establishments with a guarantee that the data will be held in confidence. Closure of the meetings is in accordance with subsection 10(d) of Public Law 92-463, as amended by Public Law 94-409, and as cited in 5 U.S.C. 552b(c) (2) and (4).

However, members of the public are invited to submit material in writing to the Chairperson for the Committee's attention.

Additional information concerning these meetings may be obtained from the Chairperson, VA Wage Committee, room 1175, 810 Vermont Avenue, NW., Washington, DC 20420.

Dated: May 31, 1990.

By Direction of the Secretary.

Silvia Chavez Long,

Committee Management Officer.

[FR Doc. 90-13256 Filed 6-6-90; 8:45 am]

BILLING CODE 8320-01-M

Sunshine Act Meetings

Federal Register
Vol. 55, No. 110
Thursday, June 7, 1990

This section of the FEDERAL REGISTER contains notices of meetings published under the "Government in the Sunshine Act" (Pub. L. 94-409) 5 U.S.C. 552b(e)(3).

FEDERAL ELECTION COMMISSION

"FEDERAL REGISTER" NUMBER: 90-12780

PREVIOUSLY ANNOUNCED DATE AND TIME: Thursday, June 7, 1990, 10:00 a.m.

Meeting Open to the Public

By direction of the Federal Election Commission, the above-noted meeting is cancelled.

DATE AND TIME: Tuesday, June 12, 1990, 10:00 a.m.

PLACE: 999 E Street, NW., Washington, DC.

STATUS: This Meeting Will Be Closed to the Public.

ITEMS TO BE DISCUSSED:

Compliance and matters pursuant to 2 U.S.C. § 437g.
Audits conducted pursuant to 2 U.S.C. § 437g, § 438(b), and Title 26, U.S.C.
Matters concerning participation in civil actions or proceedings or arbitration.
Internal personnel rules and procedures or matters affecting a particular employee.

DATE AND TIME: Thursday, June 14, 1990, 10:00 a.m.

PLACE: 999 E Street, NW., Washington, DC. (Ninth Floor).

STATUS: This Meeting Will Be Open to the Public.

MATTERS TO BE CONSIDERED:

Correction and Approval of Minutes
Presidential Election Campaign Fund—Projected Shortage for the 1992 Election Cycle
Explanation & Justification of the Allocations Regulations—11 CFR §§ 102.5, 104.8, 104.9, 104.10, 106.1, 106.5 and 106.6.
Draft Advisory Opinions.
A. DAO 1990-7, Maxwell A. Snead, Jr. on behalf of The Schroeder Fund for the Future, Inc.
B. DAO 1990-8, R. Todd Johnson, on behalf of The CIT Group Holdings, Inc.
C. DAO 1990-9, Ms. Margaret R. Mueller
Administrative Matters

PERSON TO CONTACT FOR INFORMATION: Mr. Fred Eiland, Press Officer, Telephone: (202) 376-3155.

Hilda Arnold,
Administrative Assistant, Office of the Secretariat, Federal Election Commission.

[FR Doc. 90-13360 Filed 6-5-90; 3:24 pm]

BILLING CODE 6715-01-M

NATIONAL SCIENCE BOARD

DATE AND TIME:

June 14, 1990, 8:30 a.m., Open Session
June 15, 1990, 8:00 a.m., Closed Session
June 15, 1990, 9:00 a.m., Open Session

PLACE: National Science Foundation, 1800 G Street, NW, Room 540, Washington, DC 20550.

STATUS:

Most of this meeting will be open to the public.
Part of this meeting will be closed to the public.

MATTERS TO BE CONSIDERED JUNE 14:

Thursday, June 14, 1990

Open Session (8:30 a.m. to 5:30 p.m.)

(Includes lunch break from approximately 12:00 noon to 1:00 p.m.)

1. Introduction
   —Purpose of Meeting
   —Overview
2. Mission - NSF in the Next Decade
   —Mission and Capabilities
   —Outlook
3. Education and Human Resources
   —Traineeships
   —Education and Research
   —NSF Leadership
   —NSF structure
4. Research and Technology
   —Balance and continuity
   —Priority Setting
   —Engineering and Technology

Friday, June 15, 1990

Closed Session (8:00 a.m. to 9:00 a.m.)

5. Minutes—May 1990 Meeting
6. NSB Nominees

Friday, June 15, 1990

Open Session (8:00 a.m. to 12:00 noon)

7. President's Agenda and Crosscuts
   —Environment
   —International Research
   —High Performance Computing/Networking
   —Materials
8. 1992 Budget Discussion
   —Status of FY 91
   —Summary of NSB Conclusions
   —Assumptions for FY 92
9. Closing

Thomas Ubois,
Executive Officer.

[FR Doc. 90-13361 Filed 6-5-90; 3:57 pm]

BILLING CODE 7555-01-M

Corrections

Federal Register
Vol. 55, No. 110
Thursday, June 7, 1990

This section of the FEDERAL REGISTER contains editorial corrections of previously published Presidential, Rule, Proposed Rule, and Notice documents. These corrections are prepared by the Office of the Federal Register. Agency prepared corrections are issued as signed documents and appear in the appropriate document categories elsewhere in the issue.

COMMODITY FUTURES TRADING COMMISSION

Chicago Board of Trade; Proposed Amendments Relating to Quality Specifications for Corn, Soybean, and Wheat Futures Contracts, and to Delivery Points for Soybean Futures Contract

Correction

In notice document 90-12538 beginning on page 22058, in the issue of Thursday, May 31, 1990, make the following corrections:

1. On page 22058, in the third column, the agency heading should read as set forth above.

2. On page 22059, in the first column, under **DATES:**, "July 2, 1990." should read "July 16, 1990."

BILLING CODE 1505-01-D

FEDERAL MARITIME COMMISSION

Port of San Francisco/Empress Lineas Maritimas, Argentinas S.A. Terminal Agreement, et al; Agreement(s) Filed

Correction

In notice document 90-12019 beginning on page 21437, in the issue of Thursday, May 24, 1990, make the following correction:

On page 21438, in the first column, "**Agreement No: 224-200345**" should read "**Agreement No: 224-200354**".

BILLING CODE 1505-01-D

DEPARTMENT OF THE INTERIOR

Office of Surface Mining Reclamation and Enforcement

30 CFR Part 942

Surface Coal Mining and Reclamation Operations Under a Federal Program for Tennessee

Correction

In rule document 90-11587 beginning on page 20600 in the issue of Friday, May 18, 1990, make the following correction:

On page 20600, in the second column, under **II. Discussion of Amendment**, the third paragraph beginning with "The paragraph should have read:" should have appeared in larger type.

BILLING CODE 1505-01-D

DEPARTMENT OF JUSTICE

Immigration and Naturalization Service

8 CFR Part 103

[INS No. 1136-90]

RIN 1115-AB17

Appeals, Precedents, Certifications, and Motions

Correction

In rule document 90-11695 beginning on page 20767, in the issue of Monday, May 21, 1990, make the following corrections:

§ 103.3 [Corrected]

1. On page 20769, in the second column, in § 103.3(a)(2)(v)(A)(*1*), in the sixth line, "properly" should read "improperly".

2. On the same page, in the third column, in § 103.3(a)(2)(v)(A)(*2*)(*iii*), in the ninth line, "related" should read "relating".

BILLING CODE 1505-01-D

DEPARTMENT OF JUSTICE

Immigration and Naturalization Service

8 CFR Part 210a

[INS No. 1201-90]

RIN 1115-AB05

Powers and Duties of Service Officers; Availability of Service Records; Admission or Adjustment of Status of Replenishment Agricultural Workers

Correction

In rule document 90-11696 beginning on page 20771, in the issue of Monday, May 21, 1990, make the following corrections:

§ 210a.1 [Corrected]

1. On page 20775, in the second column, in § 210a.1(j), in the seventh line, "as" should read "at".

§ 210a.4 [Corrected]

2. On page 20777, in the first column, in § 210a.4(d)(1), in the first line, "9" should be removed.

§ 210a.7 [Corrected]

3. On page 20780, in the third column, in § 210a.7(j), in the first line, "Case" should read "case".

BILLING CODE 1505-01-D

NUCLEAR REGULATORY COMMISSION

[Docket Nos. 50-250 and 50-25]

Florida Power and Light Co., Proposed No Significant Hazards Consideration Determination

Correction

In notice document 90-11261 beginning on page 20218 in the issue of Tuesday, May 15, 1990, make the following corrections:

1. On page 20220, in the fifth column, the ninth entry from the bottom should read "A.2)b.1,2,3,4,5,6,7,8".

2. On page 20221, in the 2nd column, the 14th entry should read "3.14.4 and 4.15.4".

3. On the same page, in the 6th column, the 15th entry should read "None".

4. On the same page, in the 1st column, the 16th entry should read "3/4.7.9".

5. On the same page, in the 3rd column, the 19th entry should read "3/4 8-11 thru 3/4 8-14".

6. On page 20222, in the sixth column, the first and second entries should read "A.2)b." and "None" respectively.

7. On the same page, in the 3rd column, the 12th entry should read "5-1 thru 5-3".

BILLING CODE 1505-01-D

federal register

Thursday
June 7, 1990

Part II

Environmental Protection Agency

Proposed NPDES General Permit for the Coastal Waters of Louisiana and Texas; Notice of Draft NPDES General permits

ENVIRONMENTAL PROTECTION AGENCY

[FRL-3784-3]

Proposed NPDES General Permit for the Coastal Waters of Louisiana

AGENCY: Environmental Protection Agency.

ACTION: Notice of draft NPDES general permit.

SUMMARY: The Regional Administrator of Region 6 (the "Region") is today issuing a draft National Pollutant Discharge Elimination System (NPDES) general permit for discharges in the Coastal Subcategory of the Oil and Gas Extraction Point Source Category (40 CFR part 435, subpart D). This draft NPDES general permit establishes proposed effluent limitations, prohibitions, reporting requirements, and other conditions on discharges from oil and gas facilities engaged in production, field exploration, drilling, well completion, and well treatment operations. Produced water, produced sand and source waterand sand discharges are excluded from coverage under this general permit, but will, however, be regulated under a separate general coastal permit. This draft permit is being issued as a Best Professional Judgment (BPJ) determination of Best Available Technology Economically Achievable (BAT) and Best Conventional Pollutant Control Technology (BCT) levels of pollution control. This permit, when issued as final, will authorize discharges from oil and gas facilities to the coastal waters of Louisiana. This permit will not authorize discharges to areas defined as "Onshore" (see 40 CFR part 435, subpart C), or from "new sources" (see 40 CFR 122.2 and 40 CFR 122.29).

DATES: *Comment Period.* Comments must be received by July 23, 1990.

ADDRESSES: Comments should be sent to the Regional Administrator, Region 6, U.S. Environmental Protection Agency, 1445 Ross Avenue, Dallas, Texas 75202-2733.

FOR FURTHER INFORMATION: Contact Ms. Ellen Caldwell, Region 6, U.S. Environmental Protection Agency, 1445 Ross Avenue, Dallas, Texas 75202-2733. Telephone: (214) 655-7190.

FACT SHEET AND SUPPLEMENTAL INFORMATION:

I. Background Information

This section gives a brief overview of Federal NPDES permitting activity for Gulf of Mexico coastal waters over the last 10 years and touches upon future oil and gas guidelines development for the Coastal Subcategory.

The Draft Inland Tidal Waters Permit (in part the same geographic area as covered by this proposed coastal permit) was published on December 27, 1983 at 48 FR 57001. The draft permit was never published as final. Effluent limitations in the proposed permit were based on BPT guidelines for the Coastal Subcategory of the Oil and Gas Extraction Point Source Category (40 CFR part 435, subpart D) The BPT limitations set out in that 1983 proposed permit restricted oil and grease in produced waters to 48 mg/l monthly average and 72 mg/l daily maximum. All other discharges had a no free oil limitation. The discharge of oil based drilling fluids and drilling fluids with diesel oil added were prohibited. The discharge of halogenated phenol compounds was prohibited and the facility operator was required to minimize the discharge of dispersants, surfactants and detergents.

On November 8, 1989 (54 FR 46919), EPA published a notice requesting information to be used in the development of BAT and BCT guidelines and NSPS for all oil and gas effluent discharges in the coastal subcategory and presented a possible modification to the current definition of the Coastal Subcategory.

II. General Permit Coverage

In compliance with the provisions of the Federal Water Pollution Control Act, as amended (33 U.S.C. 1251 *et. seq:* the Clean Water Act, or the "Act"), operators of lease blocks covered by the Coastal Subcategory of the Oil and Gas Extraction Point Source Category, located in the coastal waters of Louisiana will be authorized to discharge to the receiving waters covered by this permit in accordance with effluent limitations, monitoring requirements, and other conditions set forth in the final general permit.

Operators of lease blocks within the general permit area will be required to make a written notification to the Regional Administrator within 45 days of the effective date of this permit that they intend to be covered by the general permit (See permit part I.A.1). Unless otherwise notified in writing by the Regional Administrator after submission of the notification, owners or operators requesting coverage will be authorized to discharge under the general permit (See permit, part I.A.). Operators of lease blocks within the general permit area who fail to notify the Regional Administrator of their intent to be covered by the general permit will not be authorized under the general permit to discharge from those facilities to the receiving waters named.

This permit does not authorize discharges from "new sources" as defined at 40 CFR 122.2.

III. Geographic Coverage

This proposed general permit covers oil and gas extraction facilities in the State of Louisiana that are engaged in production, field exploration, drilling, well completion and well treatment operations in areas defined as "coastal". The geographic scope of the proposed permit implements EPA's regulatory definition of "coastal". As a result of a decision of the U.S. Court of Appeals for the Fifth Circuit, the proposed permit also covers an area between the Chapman line and the inner boundary of the territorial seas. Both the regulatory definition and the area included as a result of the Fifth Circuit decision are explained below.

EPA's regulations define "coastal" as "(1) any body of water landward of the territorial seas as defined in 40 CFR 125.1(gg) or (2) any wetlands adjacent to such waters." 40 CFR 435.41(e). The term wetlands is defined as "those surface areas which are inundated or saturated by surface or groundwater at a frequency and duration sufficient to support, and that under normal circumstances do support, a prevalence of vegetation typically adapted for life in saturated soil conditions. Wetlands generally include swamps, marshes, bogs, and similar areas." 40 CFR 435.41(f). The coastal permit area as described in the regulations is broad by definition. It includes, for example, certain bays and all inland rivers, streams and lakes and adjacent wetlands.

The inner boundary of the area of the proposed permit cannot be delineated as a single line because, under the forgoing definition, facilities located over any body of water landward of the territorial seas and adjacent wetlands are considered to be coastal.

The outer boundary of the proposed permit area, as defined at 40 CFR 435.41(e), is the inner boundary of the territorial seas. Although 40 CFR 435.41(e) refers to 40 CFR 125.1(gg) for a definition of the territorial seas, the latter provision has been deleted from the regulations. However, 40 CFR 125.1(gg) merely repeated section 502(8) of the Clean Water Act, which defines the territorial seas as "the belt of seas measured from the line of ordinary low water along that portion of the coast which is in direct contact with the open sea and the line marking the seaward limit of inland waters, and extending

seaward a distance of three miles." 40 CFR 125.1(gg) (July 1, 1978). That statutory definition is still in effect.

Current National Oceanic and Atmospheric Administration (NOAA) nautical charts can be of assistance in locating the outer boundary of the proposed general permit area. These charts cover the entire coasts of Texas and Louisiana at a 1:80,000 scale, although certain ports and bays have more detailed coverage. They are available from NOAA Charts Agents, such as marinas and marine supply stores.

As is noted above, the geographic scope of the proposed permit also includes the area between the Chapman line and the inner boundary of the territorial seas as a result of a decision of the U.S. Court of Appeals for the Fifth Circuit. The Chapman line is formed by a series of 40 latitude and longitude coordinates that roughly parallel the Louisiana and Texas coastline to the Mexican border. EPA's regulations formerly defined "coastal" to include all land and water areas landward from the inner boundary of the territorial seas and eastward of the point defined by 89 degrees 45 minutes W. Longitude and 29 degrees 46 minutes N. Latitude and continuing west of that point through a series of longitude and latitude coordinates (the Chapman Line) to the point 97 degrees 19 minutes W. Longitude and continuing southward to the U.S.-Mexican border. So defined, the coastal area included areas on the Gulf coast of Texas and Louisiana and other areas. Interim Final Rulemaking, 41 FR 44942–44948 (Oct. 13, 1976). The 1976 boundaries were set to include wells located both in water and on land within the geographic area defined as coastal (At that time most of the facilities were believed to have been located in marshes, bays and estuaries).

On April 13, 1979 (44 FR 22069), The Agency redefined the coastal subcategory as set forth at 40 CFR 435.41(e). Under the new definition, certain wells on land were reclassified into the onshore subcategory and others were reclassified as stripper wells, depending on their rate of production. The wells that were reclassified as onshore were required to attain zero discharge. Industry challenged EPA's 1979 final rule. In *American Petroleum Institute* v. *EPA*, 661 F. 2d 340, 354–57 (5th Cir. 1981), the Court held that the Agency had failed to adequately consider the cost to the reclassified wells and to any wells that came into existence in the affected area after the issuance of the 1979 redefinition. *Oil and Gas Extraction Point source Category; Suspension of Regulations*, 47 FR 31554 (July 21, 1982). The wells affected by the suspension are treated as coastal in this proposed permit.

A facility is considered to be covered under the proposed general permit if the location of the wellhead is within the described permit area. It is the responsibility of the operator to determine if its facility is covered by this permit.

IV. Types of Discharges Covered

The following discharges, as defined below, will be covered under this final NPDES general permit.

Blow-out Preventer Control Fluid: Fluid used to actuate the hydraulic equipment on the blow-out preventer.

Boiler Blowdown: Discharges from boilers necessary to minimize solids build-up in the boilers, including vents from boilers and other heating systems.

Completion Fluids: Salt solutions, weighted brines, polymers and various additives used to prevent damage to the well bore during operations which prepare the drilled well for hydrocarbon production. These fluids move into the formation and return to the surface as a slug with the produced water. Drilling muds remaining in the wellbore during logging, casing and cementing operations or during temporary abandonment of the well are not considered completion fluids and are regulated by drilling fluids requirements.

Deck Drainage: All waste resulting from platform washings, deck washings, spills, rainwater, and runoff from curbs, gutters, and drains, including drip pans and wash areas.

Desalinization Unit Discharge: Wastewater associated with the process of creating fresh water from seawater.

Diatomaceous Earth Filter Media: Filter media used to filter seawater or other authorized completion fluids and subsequently washed from the filter unit.

Domestic Waste: Discharges from galleys, sinks, showers, safety showers, eye wash stations and laundries.

Drill Cuttings: Particles generated by drilling into the subsurface geological formations and carried to the surface with the drilling fluid.

Drilling Fluid: Any fluid sent down the hole, including drilling muds and any specialty products, from the time a well is begun until final cessation of drilling in that hole.

Excess Cement Slurry: The excess cement including additives and wastes from equipment washdown after a cementing operation.

Formation Test Fluid: The discharge that would occur should hydrocarbons be located during exploratory drilling and tested for formation pressure and content.

Muds, Cuttings, and Cement at the Seafloor: Discharges that occur at the seafloor prior to installation of the marine riser and during marine riser disconnect, well abandonment and plugging operations.

Produced Sands: Will be covered in a subsequent coastal waters production permit.

Produced Waters: Will be covered in a subsequent coastal waters production permit.

Sanitary Waste: Human body waste discharged from toilets and urinals.

Source Water and Sand: Will be covered in a subsequent coastal waters production permit.

Treated Wastewater from Dewatered Drilling Fluids and Cuttings: Means wastewater from reserve pits which have been flocculated or otherwise chemically or mechanically treated to meet specific discharge limitations.

Uncontaminated Ballast/Bilge Water: Seawater added or removed to maintain proper draft of a vessel.

Uncontaminated Seawater: Seawater which is returned to the sea without the addition of any chemicals; included are (1) Discharges of excess seawater that permit the continuous operation of fire control and utility lift pumps. (2) excess seawater from pressure maintenance and secondary recovery projects. (3) water released during the training and testing of personnel in fire protection. (4) sea-water used to pressure test piping, and (5) once through, non-contact cooling water.

Uncontaminated Freshwater: Freshwater which is returned to the receiving stream without the addition of any chemicals; included are (1) Discharges of excess freshwater that permit the continuous operation of fire control and utility lift pumps. (2) excess freshwater from pressure maintenance and secondary recovery projects, (3) water released during the training and testing of personnel in fire protection, (4) water used to pressure test piping, and (5) once through, non-contact cooling water.

Well Treatment (stimulation) Fluids: Any fluid used to restore or improve productivity by chemically or physically altering hydrocarbon-bearing strata after a well has been drilled. These fluids move into the formation and return to the surface as a slug with the produced water. Stimulation fluids include substances such as acids, solvents and propping agents.

Workover Fluids: Salt solutions, weighted brines, polymers and other specialty additives used in a producing

well to allow safe repair and maintenance or abandonment procedures. High solids drilling fluids used during workover operations are not considered workover fluids by definition and therefore must meet drilling fluid effluent limitations before discharge may occur. Packer fluids, low solids fluids between the packer, production string and well casing, are considered to be workover fluids and must meet only the effluent requirements imposed on workover fluids.

V. Statutory Basis

The Act, at section 402, sets forth the NPDES program to carry out its objective of reducing and eliminating the discharge of pollutants to surface waters of the U.S. The Water Quality Act amendments of 1987 has extended the original BAT/BCT/NSPS compliance deadline of July 1, 1984 to no later than March 31, 1989 for existing dischargers.

A. Permit Coverage

Under the NPDES permit program, every point source must have a valid permit before discharge may occur. A point source is defined as:

> * * * any discernible, confined, and discrete conveyance, including but not limited to, any pipe, ditch, channel, tunnel, conduit, well, discrete fissure, container, rolling stock, concentrated animal feeding operation, landfill leachate collection system, vessel or other floating craft from which pollutants are or may be discharged.
> (40 CFR 122.2).

Permits may be issued individually or as general permits that cover categories of dischargers where, among other things, operations are the same or are substantially similar and the types of wastes discharged are the same (40 CFR 122.28). Any discharger falling under the Coastal Subcategory of the Oil and Gas Extraction Point Source Category (40 CFR part 435, subpart D) must notify the Regional Administrator for coverage and comply with the general permit or apply for an individual permit.

B. Clean Water Act Provisions

Sections 301(b), 304, 308, 401, 402, and 403 of the Act provide the basis for the conditions included in NPDES permits. For this coastal waters permit, the conditions fall into four categories: technology-based effluent limitations, limitations based on state water quality standards, best management practices, and monitoring and record keeping requirements.

1. Technology-based Effluent Limitations

Technology-based effluent limitations are categorized by the industrial category, the pollutants covered, and the treatment level required. For existing sources these limitations require that more effective control technologies be accomplished over time. For new sources, the most stringent limitations are immediately effective The first level of effluent limitations for existing sources is based on the Best Practicable Control Technology Currently Available (BPT). This technology represents the average of the best existing waste treatment performance by plants of various sizes, ages and unit processes within the industry or subcategory. BPT guidelines for the Offshore Subcategory of the Oil and Gas Extraction Point Source Category were promulgated on April 13, 1979. (40 CFR part 435, subpart A; 44 FR 22069). These guidelines require "no discharge of free oil" for discharges of drilling muds and cuttings. This limitation is monitored by a visual inspection of the receiving water for evidence of a sheen. Interim Final BPT effluent limitations for the Coastal Subcategory were promulgated by EPA on October 13, 1976 (40 CFR part 435, subpart D; 41 FR 44942). The BPT limits established include: limitations on the discharge of oil and grease in produced water of 72 mg/l as a daily maximum and 48 mg/l as a 30 day average; a prohibition on the discharge of free oil in deck drainage, drilling fluids, drill cuttings, and well treatment fluids; a minimum residual chlorine content of 1 mg/l in sanitary discharges must be maintained; and a prohibition on the discharge of floating solids in sanitary wastes and domestic wastes.

The second level of technology-based effluent limitations is based on the Best Available Technology Economically Achievable (BAT) and Best Conventional Pollutant Control Technology (BCT). BAT limitations, in general, represent the best existing performance of technology in the industrial category or subcategory. BAT limitations control listed toxic and nonconventional pollutants (40 CFR 401.15; see Permit Appendix A for listing). BCT limitations control the conventional pollutants listed at 40 CFR 401.16 (pH, BOD, oil and grease, TSS, and fecal coliform) from existing industrial point sources. BAT and BCT may never be less stringent than BPT.

Guidelines for BAT and BCT effluent limitations, as well as New Source Performance Standards (NSPS) were proposed for the offshore subcategory of the oil and gas extraction category in August, 1985. The Agency intends to publish final guidelines covering the offshore subcategory in 1992. On November 8, 1989 (54 FR 46919), EPA published a notice requesting comments regarding various issues on the possible development of BAT, BCT and new source performance standards (NSPS) relating to discharges in the coastal subcategory, including a redefinition of the subcategory. Final promulgated guidelines for the coastal subcategory is not expected until 1995. Therefore, any permit actions by the Region must be based on the Agency's Best Professional Judgment (BPJ) of what BAT or BCT limitations may be (40 CFR 122.44).

2. State of Louisiana Standards and Limitations

All discharges to state waters must comply with state water quality standards and Railroad Commission of Texas pollution control rules for oil and gas operations. Discharges to state waters must also comply with any other limitations that may be imposed by the State as part of its certification of NPDES permits under section 401 of the Act (see below, part VI.A.).

3. Best Management Practices

To carry out the purposes and intent of the Act, Best Management Practices (BMPs) are defined at 40 CFR 122.44(k). Permit conditions can be based on BMPs to control toxic pollutants and hazardous substances under section 304(e) when numeric effluent limitations are infeasible, or when the practices are reasonably necessary to achieve limitations and standards set forth by the Act.

4. Monitoring and Recordkeeping

Section 308 of the Act specifies that to assist in developing effluent limitations and standards and in determining violations of any permit conditions, permits must require that operators monitor and record discharge information. This section of the Act requires owners or operators to maintain records, to supply reports, to install, use, and maintain monitoring equipment, to sample effluents according to prescribed methods, and to allow the Regional Administrator access to the facilities or records.

VI. Other Legal Requirements

A. State Certification

Under section 401(a)(1) of the Act, EPA may not issue a NPDES permit until the State in which the discharge will originate grants or waives certification to ensure compliance with appropriate requirements of the Act and State law. Section 301(b)(1)(C) of the Act requires that NPDES permits contain conditions that ensure compliance with applicable state water quality standards or limitations

B. Oil Spill Requirements

Section 311 of the Act prohibits the discharge of oil and hazardous materials in harmful quantities. In the 1978 amendments to section 311, Congress clarified the relationship between this section and discharges permitted under section 402 of the Act. It was the intent of Congress that routine discharges permitted under section 402 be excluded from section 311. Discharges permitted under section 402 are not subject to section 311 if they are:

(1) In compliance with a permit under section 402 of the Act;

(2) Resulting from circumstances identified, reviewed and made part of the public record with respect to a permit issued or modified under section 402 of the Act, and subject to a condition in such permit; or,

(3) Continuous or anticipated intermittent discharges from a point source, identified in a permit or permit application under section 402 of the Act that are caused by events occurring within the scope of the relevant operating or treatment system.

To help clarify the relationship between a spill, regulated under section 311, and a discharge regulated under a section 402 permit, the following list of spills was developed by EPA and has been included in all previous Gulf of Mexico oil and gas discharge permits as guidance (Note: This list is not all-inclusive):

(1) Discharges from a platform or structure on which oil or water treatment equipment is not mounted;

(2) Discharges from burst or ruptured pipelines, manifolds, pressure vessels or atmospheric tanks;

(3) Discharges from uncontrolled wells;

(4) Discharges from pumps or engines;

(5) Discharges from oil gauging or measuring equipment;

(6) Discharges from pipeline scraper, launching, and receiving equipment;

(7) Spills of diesel fuel during transfer operations;

(8) Discharges from faulty drip pans;

(9) Discharges from well heads and associated valves;

(10) Discharges from gas-liquid separators; and

(11) Discharges from flare lines.

C. The Endangered Species Act

The Endangered Species Act (ESA) and its implementing regulations (50 CFR part 402) require that each Federal Agency shall ensure that any agency action, such as permit issuance, is not likely to jeopardize the continued existence of any endangered or threatened species or result in the destruction or adverse modification of their critical habitats.

The discharges from exploration and development activities that could potentially cause the greatest impact to endangered or threatened species are drilling fluids and drill cuttings. Under the proposed permit, these discharges are prohibited and therefore, will cause no impact. Discharges that are permitted include treated wastewater, deck drainage, formation test fluids (prohibited to freshwater), treatment, completion and workover fluids (prohibited to freshwater), sanitary waste, domestic waste and several miscellaneous discharges. These discharges must meet applicable technology-based limitations and limitations designed to assure compliance with standards for the protection of water quality.

Thus, based on the terms, conditions, and limitations of this permit, EPA has concluded in its biological assessment that the discharges authorized by this general permit are not likely to adversely affect any endangered or threatened species nor adversely affect their critical habitat. EPA will provide copies of the draft permit, fact sheet, and biological assessment to the U.S. Fish and Wildlife Service and the National Marine Fisheries Service prior to issuing the permit, requesting comment on this conclusion.

D. The Coastal Zone Management Act

The Coastal Zone Management Act (CZMA) and its implementing regulations (15 CFR part 930, subpart D) require that any Federally licensed or permitted activity affecting the coastal zone of a State with an approved Coastal Zone Management Program (CZMP) be consistent with the CZMP (section 307(c)(3)(A). The State of Louisiana has a CZMP that has been approved by the National Oceanic and Atmospheric Administration (NOAA). The Region has reviewed Louisiana's Coastal Use Guidelines (including guidelines 10.1–10.14 for oil and gas and other mineral activities) and has determined that this proposed permit action is consistent with the intent of those guidelines. A copy of the draft permit, along with a consistency certification, will be submitted to Louisiana for a consistency determination.

E. The Marine Protection, Research and Sanctuaries Act

The Marine Protection, Research and Sanctuaries Act (MPRSA) of 1972 regulates the dumping of all types of materials into ocean waters and establishes a permit program for ocean dumping. In addition the MPRSA establishes the Marine Sanctuaries Program, implemented by NOAA, which requires NOAA to designate ocean waters as marine sanctuaries for the purpose of preserving or restoring their conservation, recreational, ecological or aesthetic values.

Section 302(i) of MPRSA requires that the Secretary of Commerce, after designation of a marine sanctuary, consult with other Federal agencies, and issue necessary regulations to control any activities permitted within the boundaries of the marine sanctuary. It also provides that no permit, license, or other authorization issued pursuant to any other authority shall be valid unless the Secretary shall certify that the permitted activity is consistent with the purpose of the marine sanctuaries program and/or can be carried out within its promulgated regulations. There are presently no existing marine sanctuaries in the coastal waters of Louisiana.

F. Economic Impact (Executive Order 12291)

The Office of Management and Budget has exempted this action from the review requirements of Executive Order 12291 pursuant to section 8(b) of that order.

G. The Paperwork Reduction Act

The information collection required by this permit has been approved by the Office of Water Management and Budget (OMB) under the provisions of the Paperwork Reduction Act, 44 U.S.C. 3501 *et seq.*, in submissions made for the NPDES permit program and assigned OMB control numbers 2040–0086 (NPDES permit application) and 2040–0004 (discharge monitoring reports).

All facilities affected by this permit will need to submit a request for coverage under the Louisiana Coastal Waters general permit. EPA estimates that it will take an affected facility three hours to prepare the request for coverage. All affected facilities will be required to submit discharge monitoring reports (DMRs). EPA estimates the DMR burden to be 36 hours per facility per year.

The public is invited to send comments regarding this burden estimate for any other aspect of this collection of information, including suggestions for reducing this burden, to Chief, Information Policy Branch, PM-223, U.S. Environmental Protection Agency, 401 M Street SW., Washington, DC 20460; and the Office of Water Management and Budget, Paperwork Reduction Project (2040–0086 and 2040–0004), Washington, DC 20503, marked "Attention: Desk Officer for EPA".

H. The Regulatory Flexibility Act

After review of the facts presented in this document, I hereby certify, pursuant to the provisions of 5 U.S.C. 605(b), that this general permit will not have a significant impact on a substantial number of small entities. This certification is based on the fact that the majority of parties regulated by this permit have greater than 500 employees and are not classified as small businesses under the Small Business Administration regulations established at 49 FR 5024 *et. seq.* (February 9, 1984). These facilities are classified as Major Group 13—Oil and Gas Extraction SIC 1311 Crude Petroleum and Natural Gas. For those operators having fewer than 500 employees this permit will not have significant economic impact. Effluent limitations being imposed in this permit are similar to those being drafted in state discharge permits. Moreover, the permit reduces a significant administrative burden of applying for individual permits, on regulated sources.

Robert E. Layton, Jr.,

Regional Administrator, Region 6.

VII. Specific Permit Conditions

Appropriate conditions for each discharge were determined through consideration of: (A) Technology-based effluent limitations to control conventional pollutants under BCT (BPJ); (B) Technology-based effluent limitations to control toxic and nonconventional pollutants under BAT (BPJ); (C) Louisiana State Water Quality Standards; (D) Best Management Practices; (E) Monitoring and record keeping requirements; and (F) Miscellaneous requirements.

Discussions of the specific effluent limitations and monitoring requirements, derived from the above considerations, appear below in parts A through F. This factsheet discusses all potential effluent limits for each waste stream, however, the permit only contains the most stringent limitations. Permit conditions are organized first, in the text by their statutory authority and second by the type of discharge. For convenience, these requirements and their regulatory basis are cross-referenced by the type of discharge in Table 1.

Detailed discussions of the information base and the Agency's decision making process is presented in the Administrative Records of the BAT/BCT (BPJ) Federal waters permit for the Gulf of Mexico and the BAT/BCT/NSPS effluent guideline rulemaking. Consequently, discussions on BAT, BCT, and BMP limitations are presented briefly in this fact sheet where they are the same as those found in the OCS general permit GMG280000. New permit-specific BAT and BCT considerations for this proposed Coastal permit will be discussed in detail where effluent limitations were not considered previously or are different from those found in the OCS general permit. The reader is referred to the **Federal Register** notifications for the proposed and final permits and proposed effluent guidelines for these detailed discussions (see part I., above). The information base and rationale for the permit-specific conditions resulting from consideration of state water quality standards are also new, and therefore, presented in detail in this fact sheet.

A. Best Conventional Pollutant Control Technology (BCT) Conditions

BCT (BPJ) conditions include both prohibitions and limitations on conventional pollutants. BCT parameters that are regulated in this permit include oil and grease (also regulated as "free oil"), solids, pH, and fecal coliform.

For waste streams for which no effluent guidelines exist, the Region is establishing BPT effluent limitations on a best professional judgment basis. In doing so, the Region has considered all statutory requirements of section 304(b)(1) (a) and (b) of the Clean Water Act. These considerations included the total cost of the application, the age of the equipment and facility, the process employed, the engineering aspects of the application of various types of control techniques, process changes, non-water quality environmental impacts and such other factors as are appropriate.

1. Drilling Fluids

a. Prohibitions—Discharge of oil-based drilling fluids and inverse emulsion drilling fluids is prohibited. This prohibition is based on the Agency's determination that such discharges cannot comply with the free oil limitation required below. This is a condition of the OCS BAT/BCT general permit.

b. Limitations—Free Oil. The BCT limitation on free oil is the same as the BPT limitation: None shall be detected, using the visual sheen on the surface of the receiving water method. The monitoring frequency is once per day, when discharging. For water-based drilling fluids to which any oil has been added, discharge is limited to those times that visual sheen observation is possible. The number of days a sheen is observed must be recorded.

[Exception] Discharge of water-based muds to which oil has been added is not restricted only to periods when observation is possible if the operator uses the static sheen test method for detecting free oil.

The Region is proposing to establish this permit's BCT limitation for drilling fluids to be equal to BPT because the Region does not have technology performance data available at this time on which to base a more stringent limitation. As this limitation is equal to the BPT level of control, there is no incremental cost involved.

2. Drill Cuttings

[Special Note] The permit prohibitions and limitations that apply to drilling fluids also apply to fluids that adhere to drill cuttings. Any permit condition that applies to the drilling fluid system, therefore, also applies to cuttings discharges. Monitoring requirements, however, are not the same.

a. Prohibitions—Discharge of cuttings derived from oil-based and inverse emulsion drilling fluids is prohibited. This prohibition is based on the Agency's determination that such discharges cannot comply with the free oil limitation required below. This is a condition in the OCS BAT/BCT general permit.

b. Limitations—Free Oil. The BCT limitation for free oil from cuttings is the same as that for drilling fluids: there shall be no free oil detected by use of the visual sheen on the surface of the receiving water method. Operators are cautioned that this limitation applies not only at the time of discharge, but at any time subsequent to discharge. Operators can be, and have been, held liable for permit violations resulting from cuttings piles from which oil has seeped even after the operator has left the site. The monitoring frequency is once per day, when discharging. If oil has been added to the mud system for any reason, discharge is only authorized during times when a visual sheen observation is possible.

[Exception] Discharge of cuttings from a mud system to which oil has been added is not restricted only to those periods when a visual observation is possible if the operator uses the static sheen test method for detecting free oil.

The Region is establishing this permit's BCT limitation for drilling fluids to be equal to BPT because the Region does not have technology performance data available at this time on which to base a more stringent limitation. As this limitation is equal to the BPT level of control, there is no incremental cost involved.

3. Produced Water

Produced water discharges to the coastal waters of Louisiana are not

covered by this permit action. This waste stream will, however, be covered under a separate permit for oil and gas production related activities.

4. Produced Sand

Produced sand discharges to the coastal waters of Louisiana are not covered by this permit action. This waste stream will, however, be covered under a separate permit for oil and gas production related activities.

5. Treated Wastewater from Drilling fluids and Cuttings Dewatering Activities, and Pit Closure Activities

a. Limitations—Oil and Grease. Treated wastewater must meet a daily maximum limitation of 15 mg/l prior to discharge. Samples must be collected as a grab and analyzed once per day. If the effluent is batch treated and discharged, then the monitoring is once per discharge event.

Total Suspended Solids. Treated wastewater shall not exceed 50 mg/l TSS, as a daily maximum. A grab sample must be collected and analyzed once per day. If the effluent is batch treated and discharged, then the monitoring is once per discharge event.

pH. Discharges of treated wastewater must meet a pH limitation of not less than 6.0 and not greater than 9.0 at the point of discharge. Samples must be collected as a grab and analyzed once per day. If the effluent is batch treated and discharged, then the monitoring is once per discharge event.

Note: Dilution of the reserve pit effluent or the use of dispersants or surfactants to meet any of the above standards is prohibited.

It is this Region's best professional judgment that the above limitations for oil and grease, total suspended solids and pH appropriately reflect a BPT level of control and are based on current pit dewatering technology (chemical flocculation and mechanical treatment). No technology performance data available to the Region indicate that more stringent limits are appropriate at this time. Therefore, the Region is setting BCT effluent limitations equal to BPT. Because these same effluent limitations are required by the State of Louisiana prior to discharging treated wastewater from reserve pit dewatering activities, there is no incremental cost to the operator to achieve BCT.

6. Formation Test Fluids

a. Limitations—Free Oil. The limitation of free oil is that a sheen shall not be detected on the surface of the receiving water. Monitoring must be accomplished once per day, when discharging during conditions when an observation of a sheen is possible. The number of days a sheen is detected must be recorded.

[Exception] Discharge may not be restricted to only times when observation of a sheen is possible if the operators uses the static sheen test method for detecting free oil.

Region 6 has determined that the BPT effluent limitation guideline of no discharge of free oil from deck drainage, drilling muds, drill cuttings, well treatment, workover, and completion fluids and other miscellaneous discharges should also apply to formation test fluids. The no free oil limitation for formation test fluids can be achieved through the use of oil-water separator technology or discharge of the effluent through an oil-water sump pile. No technology performance data available to the Region indicate that a more stringent limit is appropriate at this time. Thus, the Region has established BCT equal to BPT level of control for this waste stream. In addition, the State of Louisiana prohibits the discharge of free oil from any waste stream from facilities conducting drilling, workover or production operations into waters of the State; therefore, there is no incremental cost to achieve BCT.

pH. Formation test fluids must meet the BCT effluent limitation where the pH shall not be less than 6.0 and greater than 9.0 prior to discharge. Once per discharge, a grab sample must be collected and analyzed.

The pH of discharged formation test fluids may have a substantially different pH from that of ambient receiving water due to various well stimulation operations such as acidizing. The purpose of this limitation is to prevent the discharge of formation test fluids into shallow water areas where there is potential of increasing the background pH. The technology employed to maintain the pH of formation test fluids within the range of 6.0 to 9.0 is simple chemical buffering of the effluent in a catch tank prior to discharging or passage through the water treatment equipment. It is this Region's best professional judgment that the above limitation appropriately reflects a BPT level of control. No technology performance data available to the Region indicate that a more stringent standard is appropriate at this time. Therefore, the Region is setting a BCT effluent limitation for the pH of test fluids to equal that of BPT. Operators routinely buffer fluids passing through their oil water separator equipment to avoid equipment corrosion and upset conditions, thus, the above limitation for pH does not reflect any incremental cost.

7. Well Treatment Fluids, Completion Fluids, and Workover Fluids

a. Limitations—Free Oil. The BCT limitation on free oil is the same as the BPT limitation: A visual sheen shall not be detected on the surface of the receiving water. Monitoring must be accomplished once per day when discharging, during conditions when an observation of a sheen is possible. The number of days a sheen is observed must be recorded.

[Exception] Discharge may not be restricted only to periods when observation of a sheen is possible if the operator uses the static sheen test method for detecting free oil.

The Region is establishing this permit's BCT limitation for free oil to be equal to BPT because the Region does not have technology performance data available at this time on which to base a more stringent limitation. In addition, the State of Louisiana prohibits the discharge of free oil from any waste stream from facilities conducting drilling, workover or production operations into waters of the State, therefore there is no incremental cost to achieve BCT.

pH. Well treatment, completion and workover fluids must meet the BCT requirement for pH of, not less than 6.0 and not greater than 9.0, at the point of discharge. Once per discharge, a grab sample must be taken and analyzed.

The pH of discharged well treatment, completion and workover fluids may have a substantially different pH from that of ambient receiving water due to various well stimulation operations such as acidizing. The purpose of this limitation is to prevent the discharge of well treatment, completion and, workover fluids into shallow water areas where there is potential of increasing the background pH. The technology employed to maintain the pH of well treatment. completion and workover fluids within the range of 6.0 to 9.0 is simple chemical buffering of the effluent in a catch tank prior to discharging or passage through the water treatment equipment. It is this Region's best professional judgment that the above limitation appropriately reflects a BPT level of control. No technology performance data available to the Region indicate that a more stringent standard is appropriate at this time. Therefore, the Region is setting a BCT effluent limitation for the pH of well treatment, completion and workover fluids to equal that of BPT. Operators routinely buffer fluids passing through their oil water separator equipment to avoid equipment corrosion

and upset conditions, thus, the above limitation for pH does not reflect any incremental cost.

8. Deck Drainage

a. Limitations—Free Oil. The BCT limitation on the discharge of free oil is the same as the BPT limitation: a visual sheen shall not be detected on the surface of the receiving water. As this limitation is equal to the BPT level of control, there is no incremental cost involved. No technology performance data available to the Region indicate that a more stringent standard is appropriate at this time. Monitoring shall be accomplished once a day, when discharging, during conditions when a sheen could be observed. The number of days a sheen is observed must be recorded.

[Exception] Discharge may not be restricted only to periods when a visual observation is possible if the operator uses the static sheen test method for detecting free oil.

9. Sanitary Waste

a. Prohibitions—Solids. No floating solids may be discharged to the receiving waters. An observation must be made once per day during daylight in the vicinity of sanitary waste outfalls following either the morning or midday meals and at a time during maximum estimated discharge. The number of days solids are observed must be recorded.

The Region is establishing this permit's BCT limitation for floating solids equal to BPT because the Region does not have technology performance data available at this time on which to base a more stringent limitation. As this limitation is equal to the BPT level of control, there is no incremental cost involved.

b. Limitations—Biological Oxygen Demand (BOD5). It is this Region's best professional judgment that the BCT requirement for BOD in sanitary waste is 45 mg/l as a daily maximum. A grab sample must be collected and analyzed once per quarter. Data from manufacturers of offshore sanitation systems (those currently in use on most offshore and coastal platforms and rigs) show that when these units are properly operated and maintained can under optimum conditions meet 20–30 mg/l, and under normal use meet the proposed permit limitation of 45 mg/l. Most rigs and platforms in the Gulf of Mexico and state coastal waters already operate Type II—Marine Sanitation Devices which can meet the above limitation thus, there is no incremental cost associated with this limitation.

Total Suspended Solids. Sanitary waste discharges shall meet a 45 mg/l daily maximum BCT discharge limitation for total suspended solids. A grab sample shall be collected and analyzed once per quarter. Data from manufacturers of offshore sanitation systems (those currently in use on most offshore and coastal platforms, rigs, and barges) show that when these units are properly operated and maintained can, under optimum conditions meet 20–30 mg/l and under normal use, meet the proposed permit limitation of 45 mg/l. Most rigs and platforms in the Gulf of Mexico and state coastal waters already operate Type II—Marine Sanitation Devices which can meet the above limitation, thus, there is no incremental cost associated with this limitation.

Fecal Coliform. Sanitary waste discharges must meet a maximum limitation of 200/100 ml for fecal coliform bacteria. A grab sample must be collected and analyzed once per quarter. In previous permits residual chlorine has been used as a surrogate parameter for fecal coliform. The BCT limitation of 200/100 ml in this proposed permit, based on the Region's best professional judgment, is equivalent to the BPT limitation of a minimum of 1 mg/l residual chlorine (maintained as close as to this concentration as possible). Because the proposed BCT effluent limitation is equivalent to the BPT level of control, there is no incremental cost. Data from manufacturers of offshore sanitation systems (those currently in use on most offshore and coastal platforms and rigs) show that when these units are properly operated and maintained can, under normal operations meet the permit limitations of 200/100 ml.

10. Domestic Waste

a. Prohibition—Solids. No floating solids may be discharged to the receiving waters. An observation must be made once per day during daylight in the vicinity of domestic waste outfalls at times during maximum estimated discharge. The number of days solids are observed must be recorded.

The Region is proposing this permit's BCT limitation to be equal to BPT because the Region does not have technology performance data available at this time on which to base a more stringent limitation. As this limitation is equal to the BPT level of control, there is no incremental cost involved.

11. Miscellaneous Discharges

Desalination Unit Discharge
Blowout Preventor Fluid
Uncontaminated Ballast Water
Uncontaminated Bilge Water
Mud, Cuttings, and Cement at the Seafloor
Uncontaminated Seawater
Uncontaminated Freshwater
Boiler Blowdown
Excess Cement Slurry
Diatomaceous Earth Filter Media

a. Limitations—Free Oil. The limitation for all of these discharges of no free oil is that none shall be detected using the visual sheen on the surface of the receiving water method. Monitoring must be accomplished during periods when a sheen can be detected. The number of days a sheen is observed must be recorded.

[Exception] Discharges may not be restricted only to periods when observation of a sheen is possible if the operator uses the static sheen method for detecting free oil.

This Region has determined that the BPT effluent limitation guideline of no discharge of free oil from the discharge of deck drainage, drilling muds, drill cuttings, and well treatment fluids should also apply to the above miscellaneous discharges. Thus, the no free oil limitation is the Regions best professional judgment determination of BPT controls for these discharges. No technology performance data available to the Region indicate that a more stringent standard is appropriate at this time. For this permit, the Region has proposed BCT effluent limitations equal to the BPT level of control. The above BCT effluent limitations for miscellaneous discharges are the same as those established in the OCS BAT/BCT general permit. In addition, the State of Louisiana prohibits the discharge of free oil from any waste stream from facilities conducting drilling, workover or production operations into waters of the State, therefore, there is no incremental cost to achieve BCT.

12. Miscellaneous BCT Prohibitions or Limitations

a. Limitations—Floating Solids or Visible Foam. There shall be no discharge of floating solids or visible foam, from any source, in other than trace amounts. This is a condition of the OCS BAT/BCT general permit.

The BCT prohibition on floating solids is equal to the BPT level of control for sanitary and domestic wastes. The Region has determined that the BPT effluent limitations guideline of no discharge of floating solids from sanitary wastes and domestics wastes should apply to all other discharges as well. Thus, the no floating solids limitation is the Region's best professional judgment determination of BPT limitations for these discharges.

Therefore the no floating solids discharge limitation for these discharges is equal to the BPT level of control. As such, the extension of this limitation to all discharges will involve no incremental cost.

B. Best Available Technology Economically Achievable (BAT) Conditions

BAT conditions include both prohibitions and limitations on toxic and nonconventional pollutants. BAT (BPJ) effluent limitations proposed for drilling muds and drill cuttings would prohibit their discharge. The legal, technical and economic basis for this determination will be discussed below in detail (See Derivation of Permit Conditions based on EPA's Best Professional Judgment of BAT for Drilling Fluids and Cuttings Discharges).

1. Drilling Fluids

a. Prohibitions. There shall be no discharge of drilling fluids.

2. Drill Cuttings

Special Note: The permit prohibitions and limitations that apply to drilling fluids also apply to fluids that adhere to drill cuttings. Any permit condition that may apply to the drilling fluid system, therefore, also applies to cuttings discharges.

a. Prohibitions. There shall be no discharge of drill cuttings.

3. Derivation of Permit Conditions Based on EPA's Best Professional Judgment of BAT for Drilling Fluids and Cuttings Discharges

a. Sources of Data and Information. A variety of information sources were used in the development of this proposed general permit. These data sources are referenced within the body of the text and cited in full at the end of this section. The major categories of information employed included Environmental Protection Agency technical reports and guidance documents, Minerals Management Service environmental impact reports for lease sale activities, data from State oil and gas regulatory agencies, American Petroleum Institute reports and studies, proceedings from industry conferences and symposia, industry technical manuals, and industry trade publications. In addition to the above sources, a number of industry, public, and academic specialists through personal communications provided data and opinions on certain technical and economic considerations. These contacts are referenced in the document when they are the principal source of information. Beyond these contacts, no formal opinion or data collection surveys were undertaken.

b. Legal Basis—Introduction. The Clean Water Act establishes a comprehensive program to "restore and maintain the chemical, physical and biological integrity of the Nation's waters". The national goals established by the Act included eliminating the discharge of pollutants into navigable waters, prohibiting the discharge of toxic pollutants in toxic amounts, and developing technology necessary to eliminate the discharge of pollutants into navigable waters. To accomplish these goals, Congress set dates by which existing industrial dischargers would have to meet best practicable control technology currently available (BPT), best available technology economically achievable (BAT) for nonconventional and toxic pollutants and best conventional pollutant control technology (BCT) for parameters such as BOD, TSS, pH, fecal coliform and oil and grease. Initially, industries were required to meet BPT by July 1, 1977 with BAT and BCT required by July 1, 1984. EPA was unable to promulgate many of the toxic pollutant regulations and guidelines within the original time frame specified within the Act. Subsequently, amendments to the Act state that BAT effluent limitations shall be achieved as expeditiously as practicable, but in no case, later than three years after the date such limitations are promulgated under section 304 (b), and in no case later than March 31, 1989.

Criteria for Imposing BAT Technology Based Treatment Requirements Under 301(b) and 402 of the Act. Technology based treatment requirements under section 301(b) of the Act represent the minimum level of control that must be imposed in a permit issued under section 402 of the Act.

This BAT (BPJ) determination for drilling fluids and drill cuttings will result in a reasonable attempt toward the national goal of eliminating the discharge of pollutants into waters of the United States. BAT limitations in general represent the best existing performance of technology in the applicable industrial category or subcategory. The Act establishes BAT as a principal national means of controlling the direct discharge of toxic and non conventional pollutants.

The factors considered in assessing best available technology economically achievable (BAT) (40 CFR 125.3) include the age of equipment and facilities involved, the process employed, the engineering aspects of the application of various types of control techniques, process changes, non water quality environmental impacts (including energy requirements) and the cost of achieving such effluent reduction (see section 304(b)(2)(B) of the Act). At a minimum, the BAT level of technology represents the best economically achievable performance of plants of various ages, sizes, processes, or other shared characteristics. Where the Agency has found the existing performance to be uniformly inadequate, BAT may be transferred from a different industrial category or subcategory. BAT may include feasible process changes or internal controls, even when not in common industry practice. The required statutory assessment of BAT "considers" costs, but does not require a balancing of costs against pollutant removal benefits (see *EPA* v. *National Crushed Stone Association*, 449 U.S. 64, 71 (1980)).

BAT (BPJ) Permit Requirements for Drilling Fluids and Drill Cuttings. The BAT (BPJ) effluent limitation for all drilling fluids and drill cuttings established for this proposed Louisiana Coastal general permit is "no discharge". This limitation is substantially different from the BPT effluent limitation for drilling fluids and cuttings for coastal wells, which only requires no discharge of free oil. It is also more stringent than the BAT (BPJ) effluent limitations in effect for drilling muds and cuttings in the Outer Continental Shelf general permit GMG280000 (see 51 FR 24897). BAT limitations in that permit prohibit the discharge of free oil in drilling fluids and cuttings, prohibit the discharge of oil based or invert emulsion drilling fluids and cuttings generated while using oil based muds, prohibit the discharge of drilling fluids that contain diesel oil and diesel contaminated cuttings, and limit the acute toxicity of drilling fluid discharges to a minimum 96 hour LC50 (lethal concentration to 50% of the test organisms) of 30,000 ppm Suspended Particulate Phase (SPP).

The decision to propose different BAT effluent limitations for drilling fluids and drill cuttings was primarily the result of two new technology considerations applicable to the Coastal Subcategory. The first consideration involved a more detailed examination of modern solids control equipment currently in use by industry. When such equipment is properly configured and operated a significant reduction in the volume of drilling fluids generated from drilling operations can be achieved and consequently, results in a reduced volume of pollutants discharged. Industry sources have documented that it is possible to reduce the volume of

drilling fluid wastes generated by as much as 90 percent by using a closed drilling fluid system (API 1987, SWACO 1989). The second consideration reexamined the feasibility and cost effectiveness of barging (or trucking) and onshore disposal of drilling wastes as an effluent treatment option. The nearness of coastal drilling operations to onshore nonhazardous oilfield waste treatment and disposal facilities coupled with the ability to reduce the volume of drilling fluid wastes generated through efficient solids control dictates that the "no discharge" option is both technologically feasible and economically achievable. A detailed description of the rationale and economic evaluation used in developing the BAT effluent limitation will be discussed in the following sections.

c. Existing Drilling Fluid Treatment Technology and Control Options. This section describes some of the control and treatment technologies that are currently being used by industry in coastal waters, wetlands and onshore for the treatment and disposal of drilling fluids and drill cuttings. Treatment options examined in developing a best professional judgment BAT permit limitation included closed cycle drilling fluid systems, annular disposal, barging and commercial landfarming and on site disposal.

Rotary Drilling Technology. Analysis of geological and geophysical data (i.e., well logs, cores, seismic, gravity, magnetics, etc.) provide the basic information on where potential hydrocarbon deposits are located. However, the only mechanism that can absolutely confirm the presence of oil and gas is exploratory drilling. When commercial accumulations of hydrocarbons are discovered, the field is then "put on production" by drilling development wells. Exploratory and development drilling are mechanically very similar and generate similar types of wastes up to the point of production. Development wells will also generate completion, treatment and workover fluid wastes sometime during their life.

Since the early 1900's, the primary mechanism used to evaluate potential hydrocarbon deposits has been with the use of a rotary drilling rig. Rotary drilling is accomplished by rotating a bit at the end of a drill string which cuts and chips the rock formations encountered at the bottom of the hole. The drill string consists of 30 foot lengths of special high strength steel pipe ranging from 3.5 inches to 5 inches in diameter. Each length is referred as a joint and three joints make up a stand of pipe. When making a bit trip (retrieving and replacing a worn bit), pipe is pulled from the hole and separated into stands each consisting of three joints. This reduces trip time by reducing the number of pipe connections that must be made. Heavy-walled pipe (drill collars) are placed at the base of the drill pipe nearest the bit and provide the weight needed to drill. The type of bit used will vary depending upon the rock type being drilled. Most commonly tri-cone bits are used and get their name from the three cone shaped cutting wheels studded with teeth or buttons. The drill string also provides the mechanism of pumping drilling fluid to the bit and that fluid is then circulated back up the hole where the drilled rock cuttings are then removed by surface solids control equipment. The kelly, a multi-sided joint of pipe is screwed into the upper end of the drill string each time a new joint of pipe is added to deepen the hole. The kelly bushing is located in the rotary table and allows the kelly and entire drill string to rotate. The rotary motion is provided by the rotary table located on the rig floor through which the kelly passes. The kelly and drill string are supported by a block and tackle system which is in turn supported by the drilling derrick.

During a drilling operation the open hole is periodically lined with steel pipe called casing to prevent the borehole from caving in, to protect weak formations from being fractured by high density drilling muds and to protect productive horizons from drilling mud contamination. Usually two or more casing strings are run in the hole in a telescoping fashion. The first string, the surface casing, is the largest diameter and is run at fairly shallow depths. Successive strings are smaller in diameter and run in longer sections. To establish a bond between the casing and the hole a cement slurry is pumped down the casing, out a valve at the bottom (casing shoe) and up the annular space between the casing and the hole. When the casing has set for approximately 10 hours drilling resumes with a smaller bit.

Drilling Fluid Circulation System. Most rotary drilling operations employ a drilling fluid circulation system or active mud system which consists primarily of mud storage tanks or pits, mud pumps, stand pipe, kelly hose, kelly, drill string, well annulus, mud return flowline and solids separation equipment. The primary function of drilling fluid circulation is to carry drilled rock fragments from the bottom of the hole to the surface where they are then separated out. The mud circulation system begins with the mud pumps which are capable of moving large volumes of fluids at high pressures (up to 4,000 psi). The pumps draw drilling mud from the suction pit and forces it up the stand pipe a long vertical pipe attached to the derrick. The mud then enters the swivel through the kelly hose (or rotary hose). From the swivel, mud travels into the kelly and down to the bit through the drill string. The bit is usually equipped with three nozzles or jets, which causes the mud to be ejected from the bit at high velocity. The jets enable the drilling fluid to scour the bottom of the hole and also keep the teeth on the bit free of previously drilled cuttings. Completing the cycle of circulation, the mud returns to the surface through the space between the drill string and the borehole, commonly referred to as the well annulus. At the surface the mud flows by gravity feed through the mud flow line to the shale shakers and into the sand trap or settling pit. The settling pit, a large rectangular steel tank, receives the underflow from the shale shakers (a series of vibrating screens) which have removed the coarsest rock cuttings from the mud system. As its name implies, the settling pit has no agitation and thus allows the finer sand size particles to settle to the bottom and out of the mud system. The mud may then pass through other various solids removal equipment (removing successively smaller rock particles) and into additional pits for chemical treatment, storage, or mixing new mud (i.e., makeup pit) before returning to the suction pit.

Drilling Fluids. The drilling fluid plays a major role in a safe and successful drilling operation. Early drilling fluids were a simple mixture of clays and water. But as the search for hydrocarbons has expanded to deeper, higher temperature horizons and with the advent more radical directional drilling, so too have the requirements of the drilling fluid expanded. Drilling fluids have become complex mixtures of liquids, solids and chemicals, designed to interact in a predictable manner under given drilling conditions. The principal functions of drilling fluids include; transport cuttings to the surface, suspend cuttings when circulation is stopped, control subsurface pressures, cool and lubricate the bit and drill string, support the walls of the wellbore, minimize damage to the formation, help support the weight of the drill string, transfer hydraulic energy to the bit, and provide a suitable medium for running wireline logs.

The composition of a drilling mud will depend upon the requirements of the particular drilling operation. Holes must

be drilled through different types of formations, requiring different types of drilling muds. The majority of drilling fluids are classified as water-based muds. This refers to any drilling fluid having water as the liquid or continuous phase and in which other materials are suspended or dissolved. There are numerous mud additives used to obtain special properties, but basically water based muds have three phases: (1) The continuous phase or water phase, (2) the reactive solids phase (commercial hydratable clays and drilled shales held in suspension) and are chemically treatable and (3) the inert solids phase (primarily drilled solids, limestone, sandstone and dolomite, and added barite for weighting) and are chemically unreactive. The solids in a drilling fluid can be separated into two distinct classes based on their specific gravity. Low gravity solids (drill cuttings) have specific gravities that range between 2.3 to 3.0 and average around 2.5. High gravity solids, primarily barite, have specific gravities above 4.2. The size of solid particles in the mud also play a significant role in maintaining proper drilling fluid characteristics. Solids produced by the drill bit vary considerably in size and range from colloidal to large cuttings. Particles less than 2 microns are classified as colloidal. These particles due to their small size are generally sensitive to surface electrical charges and thus are typically more active solids. Silt size particles range from between 2 microns and 74 microns in size. Particles over 74 microns are classified as API sand. A 200 mesh screen is used for the API sand test, and all particles which do not pass through the screen are classified as sand.

The instability of a drilling fluid (chemical and physical properties) tends to increase as the percentage of solids by volume in the mud increases (IMCO 1978). The concentration, particle size, type and reactivity of the drilled solids will determine the mud properties that will be affected. Specifically, mud weight, funnel viscosity, plastic viscosity, yield point, fluid loss characteristics and gel strength are directly affected by increasing solids concentration and can require constant dilution and building of new mud to maintain desired mud properties (SWACO 1989). The funnel viscosity or relative viscosity increases as the percent solids by volume increases. Solids generated viscosity means that not enough free water is available for particles to move past each other. Solids develop a water envelope when introduced to the mud system which effectively enlarges the particle and reduces the free water content. Therefore, as solids increase so does the relative viscosity. An increase in solids also causes an increase in mud weight and can result in lower penetration rates. Plastic viscosity is a measure of the frictional forces in the drilling fluid. As solids concentration in the mud increases, the space between the particles decreases resulting in greater frictional forces. As solids are ground into the colloidal and ultra fine size ranges, their effective surface areas increase dramatically and so does the plastic viscosity. From a control point of view it is extremely important to remove large solids early before they become entrained in the mud system and ground to finer and finer size fractions. High gel strengths are also associated with excessive solids buildup and result in higher pressure losses in the well annulus. This leads to high surge and swab pressures and could ultimately lead to lost circulation. High solids buildup can also affect the thickness of the wellbore filter cake. Filtrate volume is lowered by incorporating solids in the cake and the thickness of the cake generally increases which may also result in severe hole problems such as differential pressure sticking. Drill solids are generally not good solids substitutes for building an impermeable and compressible filter cake (Magcobar Solids Analysis Seminar).

In summary, mud solids control is one of the most important phases of mud control and exerts considerable influence on mud and well costs, drilling rates, hydraulics and the possibility of well kicks and lost returns.

There are four principal methods used to reduce the solids content of a drilling fluid: (1) Dilution, (2) displacement, (3) gravity settling and (4) mechanical separation.

The dilution method reduces the concentration of drilled solids by the addition of the liquid phase to the active mud system to reduce the relative volume occupied by the drilled solids. Eventually the increase in the mud volume will require a portion of the active system to be discharged. Typically, dilution and displacement are practiced concurrently. This method used alone can generate large volumes of drilling wastes.

The displacement method involves the removal or discharge of large volumes of drilling fluids from the active mud system and replacing the volume removed with new mud having the desired rheological properties. This method of solids removal can be very expensive because every barrel of mud that is discarded must be replaced which increases the overall cost of the mud system.

Settling is the separation of solid particles due to gravity and results from the difference in the specific gravities of the solids and the liquid. Settling rate depends upon particle size, specific gravity, and viscosity of the mud. The effective settling rate of solids can be increased by flocculants and viscosity reducing chemicals; however, settling is an extremely inefficient and slow method of solids removal.

Mechanical equipment separation selectively separates drill solids from the drilling fluid by either size or mass. Therefore all mechanical separators are designed to operate within certain particle size ranges for a given material. The specific equipment necessary to maintain desired mud properties and mud and well costs will be described in detail in a later section.

Current Industry Solids Control Practices. Solids processing equipment is an integral part of any drilling fluid system (Leyendecker 1986) and proper solids control management is absolutely essential in reducing the volume of waste fluids generated during a drilling operation (Rafferty 1985). The specific equipment present on the rig is dependent upon the depth, type of formations being drilled and the imposition of environmental controls by state or federal regulation. Typical solids separation equipment present on any given rig might include any or all of the following: shale shakers, desander, desilter, centrifuge, mud cleaner, mud gas separator, and various forms of mud agitators (mud guns and mechanical stirrers). An adequate solids control program is a key factor in drilling fluid economics as well as being able to maintain the system so as to minimize drilling problems (Leyendecker 1986).

Proper solids control practices are often disregarded by industry primarily due to up front cost considerations (equipment installation and rental) irrespective of information that shows the cost effectiveness of maintaining good solids control (Cagle 1987). A simple dilution model showed that a minimal 10 percent increase in solids removal efficiency resulted in a significant savings of over $500.00 per day in mud costs. Cagle also concluded from the results of numerous rig surveys that lower solids control efficiencies require more dilution. Every barrel of dilution fluid must be purchased and converted to drilling mud (cost dependent upon fluid type and weight) and higher dilution requirements automatically require higher mud costs.

Instead of removing drilled solids through by mechanical means to maintain an acceptable level of low gravity solids (cuttings) in the drilling fluid it is also possible to discharge part of the mud system and replace it with new mud (lower solids fluid), effectively diluting the solids content of the overall mud system. This dilution practice greatly increases the volume of drilling wastes generated over the life of the well. A recent rig survey by Cagle 1987, indicated that the typical drilling rig operating with the typical contractor solids control equipment was operating at between 25 percent and 50 percent efficiency.

Hoberock and Williams in 1983, conducted a field survey of 33 drilling rigs, with the intent of evaluating the use of solids control equipment and to focus on the most common and detrimental errors made in using the technology. The results showed that; 56 percent failed to meet minimum performance criteria for shale shaker installation; 53 percent of the desilter/desander installations had insufficient capacity to process the full flow of the drilling fluid; 66 percent had improper centrifugal pump installations with the main problems resulting from incorrect motor or impeller sizing; 78 percent were equipped with difficult to maintain or poorly maintained solids removal equipment (roping cones verified low efficiency); and 81 percent had drilling fluid routing errors associated with the desander/desilter installations which resulted in as little as one-half of the rig circulation being processed. In general, this survey showed that industry was a long way from implementing known technology. Leon Robinson, a research advisor at Exxon Production Research an expert in solids control equipment, gave an interview to the Petroleum Engineer International trade publication in June 1988 on the merits of good solid control. He too found that one of the most common problems in relation to solids control was improper plumbing of the equipment. With improper plumbing only 30 percent to 60 percent of the entire drilling fluid system is typically processed through the solids separation equipment. Other problems with equipment plumbing were; failure to install partitions in mud tanks, and improper feeding of the mud from the suction tank.

Closed Cycle Drilling Fluid Systems. Closed cycle drilling fluid systems are defined as systems in which mechanical solids control equipment (screen shakers, hydroclones, mud cleaners, centrifuges, mud gas separators, etc.) and collection equipment (roll off boxes, vacuum trucks, shale barges, etc.) are used to minimize waste mud and cutting volumes to be disposed of onsite or offsite. This ultimately serves to maximize the volume of drilling fluid returned to the active mud system (Hanson et al. 1986). The primary economic benefit of implementing an effective solids control program using a closed cycle system is a reduced mud cost; however, other less tangible but equally significant economic factors include increased penetration rates, reduced cost for chemical treatment, increased bit life, increased control of mud properties, reduced maintenance costs of surface equipment, improved accuracy of downhole information, reduced risk of differential pressure sticking, reduced cementing problems, reduced formation damage, reduction in reserve pit size or elimination of reserve pit for onland applications, and ultimately a reduced volume of drilling waste fluids generated.

Closed cycle systems can be used in both offshore and onshore drilling operations (Hanson et al 1986) and are currently being used in the coastal waters of Louisiana (per. comm. w/ SWACO and Cliffs Drilling contractors).

The equipment and technology that comprises closed cycle drilling fluid systems has been available for a number of years. Field-practical decanting centrifuges were first introduced in 1952, efficient 6" hydrocyclones in 1954, much more efficient 4" hydrocyclones in 1962 and very fine shale shaker screens in 1966 (Ormsby in Moore 1974). In the last 10 years additional progress has been made in the field of solids control. In regard to more conventional equipment, finer and more durable screens are being run on shale shakers, more durable centrifugal pumps are available, more efficient degassers have been developed, high efficiency hydrocyclones have been introduced, and centrifuges with more wear resistant conveyers and higher G-levels are available. In addition, more specialized equipment has been introduced, such as the vacuum-belt filter (Cagle 1987). Regardless of these significant improvements in solids control technology, Cagle (1987) found that efficient solids control practices are not being implemented in many of the wells being drilled. The results of poor solids control is slower rate of penetration, increased mud costs, increased downhole problems, and increased wear on surface equipment. Poor solids control increases the cost of drilling and usually far exceeds the cost of installing and operating the equipment.

The first functionally complete closed cycle drilling fluid system was developed and operated in early 1976. Since then, closed systems have been used in numerous locations throughout the world. An efficient solids control system (closed cycle system) is composed of various pieces of mechanical equipment, each installed in its proper place with all required auxiliary equipment correctly sized and positioned. In addition it is important that the equipment be properly operated and maintained to achieve maximum efficiency, and each is sized to handle the maximum circulation rate to be expected during drilling operations. A pump is sized to supply each unit of solids removal equipment, and all flow lines are properly plumbed and designed to be as short and straight as possible (Churchwell 1981). Solids control equipment should be arranged in order of their respective particle size separation i.e. shakers at the flowline and centrifuges just before the pump suction. Each piece of solids removal equipment must take suction from an upstream compartment and discharge to a compartment downstream of its own suction. The type of solids removal equipment installed in the removal section of an active mud system is dependent upon the type of drilling operation and disposal requirements. Generally the equipment is configured for unweighted mud systems, weighted mud systems and oil mud systems or dry location zero fluid discharge situations. In general, the solids processing equipment found on an effective closed cycle system would include some or all of the following depending upon the drilling requirements: two or more fine screen shakers, desander, desilter, mud cleaner(s), microclones, decanting centrifuges, and mud degasser.

A typical closed cycle drilling fluid system for an unweighted mud would be configured as follows. The shale shakers are the first piece of equipment located at the flowline to remove solids as the drilling fluid returns to the surface. The complete flow of the mud should be processed evenly over both of the duel screen fine mesh shakers. The finest mesh screen possible should be used that will allow at least 75 percent of the surface of the screens to be covered with mud. Drilled solids larger than the screens openings pass off the end of the shakers and into a reserve tank. The drilling fluid that passes through the screens collects in the sand trap compartment. The sand trap is the first mud collection compartment of the

active mud system. The sand trap is a settling tank that functions as a safety device to protect other downstream solids removal equipment by trapping the large solids in the event of a shaker bypass or if a screen becomes damaged or torn. The sand trap delivers mud to the rest of the active mud system over a high overflow weir into the next downstream compartment. If the mud has the potential to contain gas or become "gas-cut" the degasser should be utilized in the first compartment downstream of the sand trap so that gas free mud is fed to the remaining solids removal equipment. Hydroclones and centrifugal pumps do not operate efficiently on gas-cut muds. The desander is the first hydroclone used following the shaker. The feed pump should take its suction from the first compartment downstream of the sand trap or the discharge compartment from the degasser. The desander should be sized to handle at least 125 percent of the highest anticipated circulating volume. The overflow from the desander is discharged in the next downstream compartment and the underflow is discarded to the reserve tank. The desilter hydroclone receives is feed from the desander overflow compartment. The overflow of the desilter is discharged to the next downstream compartment and the underflow is discarded to the reserve tank. To maintain proper operating efficiency both the desander and desilter should have their own correctly sized centrifugal pump. If a mud cleaner is used on an unweighted mud system, it should be rigged up in the same location as the desilter and operated as a desilter, reducing the chance of introducing ultra-fine particles back to the active system. High efficiency microclones (20 2" hydroclones) take their suction from the desilter overflow compartment. The overflow or liquids and fine solids are returned to the next downstream compartment of the active mud system. The wet solids underflow (10–17 micron size fraction) is then directed to the decanting centrifuge for processing. In this particular instance the centrifuge is rigged up for solids removal (not barite recovery) and is used primarily to dry up the very wet microclone discharge. The centrifuge underflow (>7 micron solids) are discarded to the reserve tank and the liquid and fine solids overflow is discharged to the next downstream compartment. At this point a second decanting centrifuge takes its suction from the overflow tank of the first centrifuge. This high speed centrifuge is used primarily as a clarifier to remove the remaining ultra-fine, 2–3 micron sized solids. The solids are discarded to the reserve tank and the liquids are returned to the active mud system. From here the mud is pumped to other various treatment or mixing tanks before returning to the suction tank where it is recycled back down the well annulus.

In a weighted mud system the desander and desilters are usually replaced by mud cleaners and the microclone is not operated. In both instances barite passes through the mud cleaner screens and returns to the active mud system with the liquid and solids underflow. Drilled solids are discarded to the reserve tank from the screen overflow. Duel decanting centrifuges are used for barite recovery, maximum removal of drilled solids, and retention of chemical and liquids to the active mud system. Drilling fluid from the underflow of the desilter/mud cleaner is directed to the first centrifuge to recover the barite weighting material. The solids underflow containing the removed barite is returned to the active mud system. The liquid and fine solids discharge is directed to a holding tank where it is then fed to a high speed centrifuge to remove the ultra-fine solids. The solid fraction is discarded and the liquid is returned to the mud system.

The use of mud recirculation systems as described above is a common practice for onshore drilling and are beginning to be used more in offshore and coastal waters. Their use represents great benefit, as they can reduce the water and mud input requirements. This translates into cost savings on raw materials and also results in a reduction of waste material generated requiring disposal (EPA 1986).

Equipment Characteristics. Following is a more detailed discussion on the operational characteristics of the previously described solids removal equipment.

Shale Shakers. Solids control on most wells begin with the shakers which have the potential of removing large amounts of solids before they are broken up into finer particles and become entrained in the mud system. The smaller the solids particle the more difficult it becomes to remove later.

Shale shakers are large single or double decked vibrating screens through which the mud flow returning from the well bore is first directed. The principle behind screening separation is that the larger sized material (larger than the openings in the screen) is retained on the screen's surface and is discarded as waste, whereas the smaller sized solids that pass through the screen are retained and returned to the active mud system. Wire screens are usually classified by their API "mesh" size, which specifies the number of wires per linear inch. The mesh sizes available range from a very coarse 10 mesh to ultra fine 325 mesh (SWACO 1989).

Shale shakers have undergone vast improvements over the last 10 years with most of the work being done in the areas of screen design and vibrating pattern. The results of these improvements is the ability to run finer screens greatly improving solids removal capability. Up until about 1978, the practical limit for shaker screens was about 80 mesh (Cagle 1987) but, with the development of new screen technology much finer screens are now possible. A 200 mesh (74 micron) screen now seems to be the practical operating limit for shaker screens. This size screen would permit 97 percent of the barite in the system to pass through and be retained in the mud system. The remaining 3 percent would be discarded with the drilled solids (SWACO 1989). Bonded screens now being employed are generally of two types, perforated metal plate to which screen is bonded and a fine screen bonded to a stiff coarse backup cloth. One of the principal advantages over earlier fine screens is that rips and tears can now be easily repaired which results in a much longer usable life (Cagle 1987).

The types of vibratory motion available in different models of shakers include circular, elliptical and most recently linear. The type of motion used is dependent upon type of solids, drilling fluid and volume being processed.

Hydroclones. The next separation equipment after the shale shaker are the desander and desilter hydroclones and the microclone. The desander is designed to remove particles down to approximately 40 microns, the desilter will remove particles as small as approximately 20 microns and microclone will remove solids in the 10–14 micron range. Hydroclones are conical-cylindrical devices with no internal moving parts. The conical portion of the hydroclone is at the bottom of the clone and the cylindrical feed chamber is at the top. At the apex of the conical section or bottom is the underflow opening through which the separated solids are discharged. Near the top of the feed chamber is an inlet opening that is positioned perpendicular to the axis of the clone. The vortex finder, a hollow cylinder, extends from below the inlet feed up through the feed chamber and forms the outlet for the overflow. During operation, drilling fluid is pumped through the tangential

opening (feed inlet) in the cylindrical section of the housing which forces the mud to start spiraling downward toward the apex of the cone body. Centrifugal force acts upon the larger and heavier particles which are thrown outward toward the wall of the cone, while finer, lighter particles move toward the center with the moving fluid. The large particles and small amounts of fluid are discarded out the apex. The remaining fluid and finer solids reverse direction and pass back up inside the cone of fluid and out the vortex finder at the top of the clone. As in a natural cyclone, there is a central air core within the inner spiral.

In general, separation efficiency is dependent upon the following general parameters: Plastic viscosity of the fluid, feed solids load, flow, hydroclone size and proper rig up. The main advances in hydroclone technology have taken place in wear resistant synthetic materials and improved design. Most of the hydroclones in use today are replaceable and are made of polyurethane (Cagle 1987). Size and proper rigging are also important factors. Improper fluid routing may reduce the amount of drilling fluid treated by 50 percent (Cagle 1987). Young (1987) showed that new smaller hydroclones should operate 25 to 50 percent more efficiently than 4 inch desilter hydroclones more typically used today.

Mud Cleaner. Mud cleaners were developed in the early 1970's for removing sand from weighted mud systems. Desanders and desilters can be used for this purpose, but barite losses quickly reduce the economics of the operation. The mud cleaner is a combination hydroclone-shale shaker device and consists of hydroclones (size of clone dependent upon the size of particle being removed) mounted above a fine screen shaker. The hydroclone underflow is directed to a fine mesh screen where the solids (barite and small cuttings) and liquid muds will be returned to the mud system through the screen. The solids that collect on the screen are discarded. The need for mud cleaners has been reduced considerably with finer screens being run on shale shakers and specifically in unweighted mud systems where the mud cleaner should be operated as a desilter with the screen blocked off and the underflow being discarded to the reserve pit (Cagle 1987).

Decanting Centrifuge. The decanting centrifuge consists of a rotating cone shaped drum that rotates at a high rate of speed (1200–3500 rpms) and a screw conveyor within the bowl turning at a slower speed (20–90 rpms slower) that moves the coarse particles toward the discharge port. This differential speed allows a slow relative motion to exist within the bowl while the high rate of rotation develops a strong centrifugal force that throws heavier particles toward the outside of the bowl. The screw conveyor scrapes off the solid material where it is then discarded through the discharge ports at the small end of the centrifuge. The liquid fraction is returned to the active mud system through the liquid regulating weirs at the large end of the centrifuge.

Centrifuge applications may be categorized as either primary or secondary separation. Primary separation is where the centrifuge is used directly on the active mud system for the purpose of recovering barite in weighted drilling muds. In this application up to 95 percent of the usable barite is returned to the active mud system while the liquid effluent containing ultra-fine solids is discarded to the reserve pit. Secondary recovery is where the centrifuge is processing the effluent or underflow from hydroclones, mud cleaners or centrifuges. Secondary recovery using duel centrifuges has the added advantage of processing the liquid effluent from the first centrifuge by a second high speed centrifuge which remove a large percentage of the ultra-fine solids, and returns costly chemicals, bentonite and liquids back to the active mud system. Benefits are reduction of liquid consumption, reserve pit size (if applicable) and disposal costs.

d. Economic Analysis. This section evaluates the cost requirements and economic feasibility of imposing the selected BAT technology based permit limitations on the discharge of drilling muds and drill cuttings to coastal waters. Cost estimates used in the following economic analysis were obtained from various industry contractors based on current pricing schedules and actual cost information.

Model Well Characteristics. Model well characteristics were established for the purpose of estimating compliance costs per facility for the no discharge of drilling fluids and drill cuttings limitation in this permit. The characteristics of the model well used in this analysis generally represents a maximum cost/worst case scenario for most input parameters (Table 2). This approach was taken because it is impractical to analyze all drilling situations which might occur in the subcategory. Generally, the depth of the well and correspondingly the number of days required to drill the well gives the most direct indication of the overall cost of the drilling operation and would represent the highest expected cost for solids control equipment and the largest volume of drilling wastes. Thus, if the economics for the proposed permit limitations proved feasible for the worst case scenario, then it was assumed that shallower less costly wells would also be economic.

Economic Scenarios. Three economic scenarios were developed that are representative of the different levels of solids control that are currently in use in the coastal area. Each represents an increasing level of up front expenditures such as retrofitting costs, and equipment rental costs and also represents a decrease in the volume of drilling fluid waste generated. Cost estimates presented below were obtained through personal communications with various drilling contractors and are believed to reflect current industry rates.

Scenario 1. This model represents the minimum level of solids treatment technology and imposes the lowest level of equipment cost to the operator. This scenario is probably most representative of current industry practice in coastal waters. The equipment used for solids maintenance would include one or two shakers, a desilter and a desander. Average equipment efficiency for removing drilled solids would be approximately 38 percent (See Cagle 1987). This model represents a minimal treatment/barging option (Table 3).

Scenario 2. This model represents an intermediate level of solids control efficiency, with the equipment being used to include shale shakers, desilters, desanders, mud cleaners, and microclones. Average equipment efficiency would be approximately 62 percent (Table 4).

Scenario 3. The third model represents the closed cycle drilling fluid system, and characterizes the best solids control technology in use by industry. The equipment used would the same equipment found in scenario 2 but would also include decanting centrifuges and possibly a polymer flocculation unit. Equipment efficiency would average around 90 percent (Table 5).

In summary, to meet the no discharge limitation for drill cuttings and drilling fluids, an expenditure of $183,450 per well (approx. 11 percent of the total cost) would be required (Table 6). This is believed to represent a worst case/highest cost estimate and is expected to be lower for most drilling operations. Drilling disposal costs have been estimated at the high end for water based muds and may more typically run between $5 to $10 per bbl range.

depending upon oil content and salinity (see Non Water Quality Impacts Section). In addition substantial retrofitting costs have been included in the model each time a well is drilled. These costs are incurred by the operator when the solids equipment contractor or drilling contractor bids the job. However, once a rig or barge has been modified so that the equipment can be installed then this cost (approx. $35,000) would not be charged again to the operator. This would substantially lower the overall cost of compliance. This analysis has not taken into consideration cost savings (pit construction and pit closure) to operators in marsh areas that use reserve pits and ring levees to contain drilling fluids. This analysis also does not include more difficult to document savings to the operator on drilling costs due to improved mud properties using closed cycle systems i.e., increased rate of penetration and fewer rig days, lower probability of stuck pipe, decreased number of bits required, reduced wear on surface equipment etc.

Since closed system drilling fluids technology is routinely used both in onshore and offshore drilling operations (onshore areas where reserve pits are prohibited by private land owners, offshore waters where operators drill with oil based muds, and coastal waters where discharge of drilling muds are prohibited by state permit) the Region believes that this technology is directly applicable to the permits it is proposing for the coastal waters of Texas and Louisiana. Thus, based on the current use of closed mud systems this technology has been demonstrated to be technically feasible and economically achievable.

e. Non Water Quality Environmental Impacts. This section evaluates the non-water quality environmental impacts of implementing the BAT permit limitations. These aspects include energy requirements, solid waste generation and onshore disposal, air pollution, dredging, and water use.

Land Disposal Facilities for Non-Hazardous Wastes (NOW). The most significant non-water quality environmental impact of the proposed permit action prohibiting the discharge of drilling fluids and drill cuttings is the onshore disposal of the drilling wastes. Closed cycle drilling systems effectively reduce the volume of drilling fluid waste generated and consequently the volume of waste that must be disposed of at an onshore disposal site.

There are presently 31 approved commercial facilities in the state of Louisiana that are capable of storing, treating or disposing of non-hazardous wastes generated from oilfield operations. Non-hazardous oilfield wastes (NOW) are divided into 16 categories with certain facilities treating some or all of the waste types. Of the 31 approved disposal facilities, eight are currently accepting drilling muds and cuttings for treatment and land disposal. The Injection Mining Division of the Louisiana Department of Natural Resources maintains a list of the approved NOW commercial facilities, types of wastes they are approved to process and statistics on volumes of wastes currently being processed. This information was used to characterize the availability of disposal sites and ability to process the additional waste load as a result of this permit action. In 1988, state statistics show that a total of approximately 3 million barrels of drilling fluids and cuttings were processed with the largest waste treatment facility handling approximately 1.33 million barrels and the smallest approximately 20,000 barrels. Based on the above information, it appears that adequate capacity is available for land disposal of drilling fluids as a result of this proposed permit action. It is believed that additional processing capacity of drilling wastes would be directly related to demand. Several NOW facilities are currently shut down due to insufficient activity.

Energy Requirements. Additional energy requirements necessary to meet the proposed BAT effluent limitations on drilling muds and cuttings are assumed negligible. Diesel electric rig generators that supply energy to run the standard solids equipment would be adequate to power any additional equipment load.

Air Pollution. Additional air emissions may be created due to the increased activity in hauling shale barges or trucking drilling wastes to the treatment facility. However, these minor increases in airborne emissions are deemed to be insignificant when compared to the pollutant removal associated with the treatment technology.

Consumptive Water Use. Since little or no additional water is added to the operation above usual consumption, no water loss is expected as a result of the proposed permit limitations.

Dredging. Only minor additional dredging may be required as a result of this permit action. It is believed that the channels dredged for rig placement, crew boats and supply boats are sufficient to support the additional traffic from barging drilling wastes to collection and transfer terminals.

C. State Water Quality Standards, Rules and Regulations

EPA is required under 40 CFR 122.44(d)(1) to include conditions as necessary to achieve the States' water quality standards as established under section 303 of the Clean Water Act.

1. Drilling Fluids

a. Prohibitions. There shall be no discharge of Drilling Fluids.

The no discharge provision for drilling fluids is based on the state narrative criteria for Floating, Suspended and Settleable Solids. The standard for solids requires that "there shall be no substances present in concentrations sufficient to produce distinctly visible solids or scum, nor shall there be any formation of long term bottom deposits of slimes or sludge banks attributable to waste discharges from municipal, industrial, or other sources including agricultural practices, mining, dredging and the exploration for and the production of oil and natural gas". EPA solicits comment on the bulk discharge of drilling fluids and resuspension of drilling discharge piles as it relates to the state turbidity standard of not to exceed background plus 10 percent.

b. Limitations—Free Oil. The limitation of free oil is that a sheen shall not be detected on the surface of the receiving water. Monitoring must be accomplished once per day, when discharging during conditions when an observation of a sheen is possible. The number of days a sheen is detected must be recorded.

The Louisiana Department of Environmental Quality (LDEQ) has established a no discharge of free oil requirement for all facilities conducting drilling, workover, and production activities from oil and gas exploration, development, and production operations.

2. Drill Cuttings

a. Prohibitions. There shall be no discharge of Drill Cuttings.

The no discharge provision for drill cuttings is based on the state narrative criteria for Floating, Suspended and Settleable Solids. The standard for solids requires that "there shall be no substances present in concentrations sufficient to produce distinctly visible solids or scum, nor shall there be any formation of long term bottom deposits of slimes or sludge banks attributable to waste discharges from municipal, industrial, or other sources including agricultural practices, mining, dredging and the exploration for and the production of oil and natural gas". EPA solicits comment on the bulk discharge

of drill cuttings and resuspension of drilling discharge piles as it relates to the state turbidity standard of not to exceed background plus 10 percent.

b. Limitations—Free Oil. The limitation of free oil is that a sheen shall not be detected on the surface of the receiving water. Monitoring must be accomplished once per day, when discharging during conditions when an observation of a sheen is possible. The number of days a sheen is detected must be recorded.

The Louisiana Department of Environmental Quality (LDEQ) has established a no discharge of free oil requirement for all facilities conducting drilling, workover, and production activities from oil and gas exploration, development, and production operations.

3. Produced Water

Produced water discharges to the coastal waters of Texas are not covered by this permit action. This waste stream will however, be covered under a separate subsequent permit for oil and gas production related activities.

4. Produced Sand

Produced sand discharges to the coastal waters of Texas are not covered by this permit action. This waste stream will however, be covered under a separate subsequent permit for oil and gas production related activities.

5. Treated Wastewater from Drilling fluids and cuttings dewatering activities, and Pit closure activities

The State of Louisiana currently allows the discharge of treated wastewater from dewatered drill site reserve pits, shale barges, ring levees and inactive or abandoned reserve pits when the following discharge limitations are met.

Limitations—Free Oil. The limitation of free oil is that a sheen shall not be detected on the surface of the receiving water. Monitoring must be accomplished once per day, when discharging during conditions when an observation of a sheen is possible. The number of days a sheen is detected must be recorded.

The Louisiana Department of Environmental Quality (LDEQ) has established a no discharge of free oil requirement for all facilities conducting drilling, workover, and production activities from oil and gas exploration, development, and production operations.

Oil and Grease. Treated wastewater must meet a daily maximum limitation of 15 mg/l prior to discharge. Samples must be collected as a grab and analyzed once per day. If the effluent is batch treated and discharged, then the monitoring is once per discharge event.

Total Suspended Solids. Treated wastewater shall not exceed 50 mg/l TSS, as a daily maximum. A grab sample must be collected and analyzed once per day. If the effluent is batch treated and discharged, then the monitoring is once per discharge event.

Chemical Oxygen Demand. Treated wastewater shall not exceed 125 mg/l COD, as a daily maximum. A grab sample must be collected and analyzed once per day. If the effluent is batch treated and discharged, then the monitoring is once per discharge event.

pH. Discharges of treated wastewater must meet a pH limitation of not less than 6.0 and not greater than 9.0 at the point of discharge. Samples must be collected as a grab and analyzed once per day. If the effluent is batch treated and discharged, then the monitoring is once per discharge event.

Total Chromium. Discharges of treated wastewater shall meet a 0.5 mg/l daily maximum limitation. The monitoring frequency is once per day when discharging. If however, the effluent is batch treated and discharged the monitoring frequency shall be once per discharge event.

Zinc. Discharges of treated wastewater shall not exceed 5.0 mg/l as a daily maximum. The monitoring frequency is once per day when discharging. If however, the effluent is batch treated and discharged the monitoring frequency shall be once per discharge event.

Chlorides. Discharges of treated wastewater shall not exceed 500 mg/l chlorides as a daily maximum. The monitoring frequency is once per day when discharging. If however, the effluent is batch treated and discharged the monitoring frequency shall be once per discharge event.

6. Formation Test Fluids

a. Prohibition. The state of Louisiana prohibits the discharge of produced water to lakes, rivers, streams, or freshwater to intermediate wetlands in their oil and gas discharge permits. Brines brought to the surface during a production test are considered to be the same as those produced during production operations and have the same effluent limitations. Therefore, there shall be no discharge of formation test fluids to lakes, rivers, streams, or freshwater to intermediate wetlands. In addition, there shall be no discharge to wildlife refuges, game preserves, scenic streams, or other specially protected lakes or waterbodies.

Note: Freshwater and intermediate wetland areas, wildlife refuges and preserves can be determined from the 1978 Vegetative Type Map of the Louisiana (or any subsequent revisions), published by the Louisiana Department of Wildlife and Fisheries. The listing of scenic streams in Louisiana is found in the Louisiana Department of Wildlife and Fisheries publication "Natural and Scenic Streams System", (1981).

[Exception] Discharge of formation test fluids are allowed on the Mississippi River below Venice, Atchafalaya River below Morgan City, and Wax Lake Outlet. Discharges are also allowed to waterbodies and adjacent wetlands in brackish or saline marsh areas with the following limitations.

b. Limitations—Free Oil. The limitation of free oil is that a sheen shall not be detected on the surface of the receiving water. Monitoring must be accomplished once per day, when discharging during conditions when an observation of a sheen is possible. The number of days a sheen is detected must be recorded.

The Louisiana Department of Environmental Quality (LDEQ) has established a no discharge of free oil requirement for all facilities conducting drilling, workover, and production activities from oil and gas exploration, development, and production operations.

7. Well Treatment Fluids, Completion Fluids, and Workover Fluids

a. Prohibition. The state of Louisiana prohibits the discharge of well treatment, completion, and workover fluids to lakes, rivers, streams, freshwater to intermediate wetlands, wildlife refuges, game preserves, scenic streams, and other specially protected lakes and waterbodies.

Note: Freshwater and intermediate wetland areas, wildlife refuges and game preserves can be determined from the 1978 Vegetative Type Map of the Louisiana (or any subsequent revisions), published by the Louisiana Department of Wildlife and Fisheries. The listing of scenic streams in Louisiana is found in the Louisiana Department of Wildlife and Fisheries publication "Natural and Scenic Streams System", (1981).

b. Limitations—Free Oil. The limitation of free oil is that a sheen shall not be detected on the surface of the receiving water. Monitoring must be accomplished once per day, when discharging during conditions when an observation of a sheen is possible. The number of days a sheen is detected must be recorded.

The Louisiana Department of Environmental Quality (LDEQ) has established a no discharge of free oil requirement for all facilities conducting

drilling, workover, and production activities from oil and gas exploration, development, and production operations.

8. Deck Drainage

a. Limitations—Free Oil. The limitation of free oil is that a sheen shall not be detected on the surface of the receiving water. Monitoring must be accomplished once per day, when discharging during conditions when an observation of a sheen is possible. The number of days a sheen is detected must be recorded.

The Louisiana Department of Environmental Quality (LDEQ) has established a no discharge of free oil requirement for all facilities conducting drilling, workover, and production activities from oil and gas exploration, development, and production operations.

9. Excess Cement Slurry

a. Prohibition. The state of Louisiana prohibits the discharge of excess cement slurry, to lakes, rivers, streams, freshwater to intermediate wetlands, wildlife refuges, game preserves, scenic streams, and other specially protected lakes and waterbodies.

Note: Freshwater and intermediate wetland areas, wildlife refuges and game preserves can be determined from the 1978 Vegetative Type Map of the Louisiana (or any subsequent revisions), published by the Louisiana Department of Wildlife and Fisheries. The listing of scenic streams in Louisiana is found in the Louisiana Department of Wildlife and Fisheries publication "Natural and Scenic Streams System". (1981).

b. Limitations—Free Oil. The limitation of free oil is that a sheen shall not be detected on the surface of the receiving water. Monitoring must be accomplished once per day, when discharging during conditions when an observation of a sheen is possible. The number of days a sheen is detected must be recorded.

The Louisiana Department of Environmental Quality (LDEQ) has established a no discharge of free oil requirement for all facilities conducting drilling, workover, and production activities from oil and gas exploration, development, and production operations.

10. Sanitary Waste

a. Limitations—Biological Oxygen Demand (BOD5). The requirement for BOD in sanitary waste is 45 mg/l, reported as a daily maximum. A grab sample must be collected and analyzed once per quarter.

Total Suspended Solids. The requirement for TSS in sanitary waste is 45 mg/l, reported as a daily maximum. A grab sample shall be collected and analyzed once per quarter.

Total Residual Chlorine. The total residual chlorine level in sanitary waste discharges must be maintained between 0.2 mg/l and 0.8 mg/l. A grab sample must be collected and analyzed once per quarter.

11. Miscellaneous Discharges

Desalination Unit Discharge
Blowout Preventor Fluid
Uncontaminated Ballast Water
Uncontaminated Bilge Water
Mud, Cuttings, and Cement at the Seafloor
Uncontaminated Seawater
Uncontaminated Freshwater
Boiler Blowdown
Diatomaceous Earth Filter Media

Free Oil. The limitation of free oil is that a sheen shall not be detected on the surface of the receiving water. Monitoring must be accomplished once per day, when discharging during conditions when an observation of a sheen is possible. The number of days a sheen is detected must be recorded.

12. Derivation of Permit Conditions Based on State Water Quality Standards

a. Description of Applicable State Water Quality Standards. The Louisiana Water Quality Standards, set forth by the Louisiana Department of Environmental Quality, establish general and numeric criteria for discharges to state waters. The State of Louisiana has established the following narrative criteria which states: "No substances shall be present in the waters of the state or the sediments underlying said waters in quantities that alone or in combination will be toxic to human, plant, or animal life or significantly increase health risks due to exposure to the substances or consumption of contaminated fish or other aquatic life". General criteria apply at all times to the surface waters of the state (i.e., including waters within a mixing zone), except where specifically exempted, and apply to the following parameters:

- Aesthetics.
- Color.
- Floating, Suspended, and Settleable Solids.
- Taste and Odor.
- Toxic Substances.
- Oil and Grease.
- Foaming or Frothing Materials.
- Nutrients.
- Turbidity.
- Flow.
- Radioactive Materials.
- Other Substances and Characteristics.

General criteria clearly appropriate for regulating drilling fluids and cuttings discharges include those for floating, suspended and settleable solids, toxic substances and turbidity. The standard for solids requires that "there shall be no substances present in concentrations sufficient to produce distinctly visible solids or scum, nor shall there be any formation of long term bottom deposits of slimes or sludge banks attributable to waste discharges from municipal, industrial, or other sources including agricultural practices, mining, dredging and the exploration for and the production of oil and natural gas". The Administrative Authority of Louisiana may exempt certain short-term activities which are permitted under sections 402 or 404 or certified under section 401 of the Clean Water Act, such as dredging of navigable waterways, or other short term activities determined by the state as necessary to accommodate legitimate uses or emergencies or to protect the public health and welfare.

It is this Region's opinion that the discharge of drilling fluids and cuttings in shallow water areas would result in the formation of long term bottom deposits because of inadequate water depth for dispersion. The discharge of drilling fluids and cuttings to the coastal bays and estuaries in many cases produces distinctly visible cutting piles that typically are subareally exposed and can become semipermanent due to vegetative colonization (per. comm. LDEQ). The geographic area covered by this permit is one of very shallow water (approximately 95 percent of the permit area is in 10 feet of water or less). Numerous studies have been conducted and papers written on the dispersion of drilling fluids and cuttings from rigs that show that the bulk of the discharge (even in deep water environments) remain relatively near the discharge point and thus, it is obvious that the discharge of solids and high density fluids such as drilling muds in very shallow water areas will have much less of a dispersion pattern and will be concentrated near the discharge point. According to one industry source, Ayers 1981, approximately 3,000 to 6,000 barrels of wet solids are discharged from solids control equipment over the life of a well and some 5,000 to 30,000 barrels of drilling fluids are discharged. When just looking at the quantity of solids discharged (excluding water) approximately 1,000 m^3 approximately 2,000 tons) of dry solids (formation cuttings and drilling fluid additives) are discharged both in bulk and from solids control equipment over the life of a typical well. This data is in good agreement with the information presented in this permit on the volumes

of waste fluids and solids generated from drilling operations.

The standard for turbidity states that discharges "* * * shall not cause substantial visual contrast with the natural appearances of the waters of the state" (in this case, not exceed background values plus 10%). In many instances after a well has been drilled, the U.S. Corps of Engineers requires the operator to return the bottom profile to its original contour. This is generally accomplished by "prop washing" the cuttings and drilling fluids pile with a tug. This reduces the size of the pile by resuspending the material. EPA solicits information and comments as to whether this activity would locally increase the turbidity of the surrounding water over background levels plus 10 percent.

Numerical criteria for Gulf waters of the State of Louisiana, which are standards that must be met outside the mixing zone, are established for the following parameters:

- pH: 6.0 to 9.0.
- Chlorides, sulfates,. and total dissolved solids: not available (case-by-case).
- Dissolved oxygen:

Freshwater areas not less than 5 mg/l
Estuarine areas not less than 4 mg/l
Coastal marine waters not less than 5 mg/l

- Temperature:

Freshwater areas
Maximum 2.8 °C above ambient for streams
Maximum 1.7 °C above ambient for lakes and reservoirs
Maximum temperature 32.2 °C
Estuarine and coastal waters areas
Maximum 2.2 °C above ambient October to May;
Maximum 1.1 °C above ambient June to September;
Maximum temperature 35 °C

- Bacteria: <14 per dl (MPN); <43 per dl (MPN) for 90% of samples.
- Toxic substances: (See discussion below).

Specific numerical criteria are established for toxic substances in Louisiana's newly revised water quality standards, where the state has determined that adequate toxicity information is available. Louisiana has specified 49 instream numerical criteria (3 metals) expressed as freshwater acute, freshwater chronic, marine water acute, marine water chronic, drinking water supply and non drinking water supply.

Mixing zones, under Louisiana's water quality standards, are those portions of waterbodies where effluent waters are dispersed into receiving waters and are to be mixed in the smallest practicable area. Mixing zones are exempted from general and numerical criteria except as otherwise specified below. Small zones of initial dilution (ZIDS) are allowed at each discharge site and are areas where receiving water criteria do not apply. ZIDs are restricted to the immediate point of discharge and generally shall not exceed 10 percent of the mixing zone. Mixing zones must also be free from floating debris, oil, scum, or other materials at levels that constitute a nuisance; substances that produce undesirable or nuisance aquatic life; and materials in concentrations that will cause acute toxicity to aquatic life. Mixing zones shall not be allowed to significantly affect a nursery areas for aquatic life, habitat for water fowl, and areas approved for oyster propagation. Mixing zones must not include existing drinking water supply intakes. Mixing zones shall not overlap. Mixing zones for freshwater lakes and reservoirs will be expressed in terms of a maximum radius (100 feet) in all directions from the discharge point. The ZID will be no more than 25 feet. Mixing zones for discharges into bays, estuaries and coastal lakes will be expressed in terms of a maximum radius of 200 feet in all directions from the discharge point and the ZID shall not exceed 50 feet. In cases where unique site-specific or other considerations preclude the application of specific mixing zone requirements, the State may determine the mixing zone on a case-by-case basis.

For the purpose of determining compliance with Louisiana numerical criteria drilling fluids were characterized by three data sets for metals and organics. The analytical data set for metals found in drilling fluids is from the 8 generic muds (CENTEC, 1984), the 11 PESA used muds supplied to EPA Gulf Breeze (SAIC, 1984), and 66 muds analyzed as a part of the Diesel Pill Monitoring Program (DPMP) under NPDES general permit GMG 280000 (EPA, 1987). These data sets were combined to yield weighted average mean values and weighted average upper 95th percentile concentrations. The marine acute and chronic criteria for the three listed metals (arsenic, chromium and zinc) were compared to the concentrations estimated for drilling fluid metals at the zone of initial dilution (ZID) and at the edge of the mixing zone. The mixing zone established to assess compliance with the Louisiana standards was 200 feet. Metal concentrations from the drilling fluid data base was modelled to assure that the no chronic toxicity at the edge of the mixing zone requirement would be met. Louisiana also allows for a small zone of initial dilution, in this case 50 feet, to be exempt from numerical criteria. Metal concentrations in the drilling fluid data set were modelled to determine their concentrations at the 50 foot ZID to determine if acute toxicity would be present within the mixing zone.

Modelling results showed that neither acute or chronic criteria were exceeded at a 100 barrel per hour discharge rate at a 2 meter water depth when looking at mean metal concentrations.

D. Best Management Practices

1. Dispersants, Surfactants, and Detergents

The facility operator is required to minimize the discharge of dispersants, surfactants and detergents except as necessary to comply with the safety requirements of the Occupational Safety and Health Administration and the Minerals Management Service. This restriction applies to tank cleaning and other operations which do not directly involve the safety of workers. This restriction is proposed because detergents disperse and emulsify oil, thereby increasing toxicity and making the detection of a discharge of oil more difficult. These limitations have been established pursuant to NPDES permit regulations at 40 CFR 122.44(k) (Best Management Practices).

2. Halogenated Phenol Compounds

There shall be no discharge of halogenated phenol compounds as a part of any waste stream authorized in this permit. The class of halogenated phenol compounds used primarily as biocides includes toxic pollutants which can be reduced through product substitution. The discharge prohibition of this compound is based on a Minerals Management Service requirement (published at 44 FR 39031, July 3, 1979), and has been included in all Gulf of Mexico oil and gas general permits.

3. Priority Pollutants

For well treatment fluids, completion fluids, and workover fluids, the discharge of priority pollutants is prohibited, except in trace amounts. The discharge of these toxic pollutants can be reduced through product substitution. This is the same permit condition as found in the OCS BAT/BCT general permit.

E. Monitoring and Recordkeeping (section 308)

Monitoring. Monthly volume estimates are required for deck drainage, formation test fluids and well treatment, completion, and workover fluids. Monthly flow estimates are required for sanitary waste. Discharge Monitoring Reports must be submitted annually. A chemical inventory of all materials added and circulated down the well must be maintained and all

records retained for three years. Inventory data for effluents must be recorded and maintained, on a well specific basis, upon completion of each well if such effluents are discharged at any time in the drilling or completion of the well.

1. Formation Test Fluids

Volume. Once per month, an estimate must be recorded for the average discharge volume.

2. Well Treatment Fluids, Completion Fluids, Workover Fluids

Volume. Once per month, an estimate must be recorded for the average discharge volume.

Priority Pollutants. For well treatment fluids, completion fluids, and workover fluids, the discharge of priority pollutants is prohibited except in trace amounts. Information on the specific chemical composition of any additives containing priority pollutants must be recorded.

3. Treated Wastewater from drilling Fluid Dewatering Activities

Volume. Once per month, an estimate must be recorded for the average discharge volume.

4. Deck Drainage

Volume. An estimate of the monthly total discharge (bbl) must be recorded.

5. Sanitary Waste

Flow. Once per month, the average flow (MGD) must be estimated and recorded for the flow of sanitary wastes.

F. Miscellaneous [Section 402(a)(1)] Requirements

Rubbish, Trash, and Other Refuse. The discharge of any solid material not authorized in the permit (as described above) is prohibited (*See* section 402(a)(1)). This condition includes unopened or partially used sacks of drilling fluids additives, portland cement, or other chemicals. This is the same condition as established in the OCS general permit for oil and gas operations in the Gulf of Mexico.

Domestic Waste. This permit follows the limitations set out by the U.S. Coast Guard in their proposed rulemaking implementing Annex V of MARPOL 73/78 for domestic, waste disposal from all fixed or floating offshore platforms and associated vessels engaged in exploration or exploitation of seabed mineral resources. These limitations, as specified by Congress (33 U.S.C. 1901, the Act to Prevent Pollution from Ships), apply to all navigable waters of the United States. Therefore, these limitations would apply to all waterbodies in the coastal permit area.

This permit prohibits the discharge of "garbage" including food wastes, comminuted or not, within the permit area. Graywater, drainage from dishwater, shower, laundry, bath, and washbasins are not considered garbage within the meaning of Annex V. Incineration ash and clinkers are also prohibited from discharge within the permit area. (*See* Interim Final Regulations Implementing Annex V of MARPOL 73/78, 54 FR 18384, Friday, April 28, 1989).

References

API. 1987. Oil and Gas Industry Exploration and Production Wastes. Eastern Research Group (ERT) Inc., July 1987.

Ayers, R.C., Jr. 1981. Fate and Effects of Drilling Discharges in the Marine Environment. Proposed North Atlantic OCS Oil and Gas Lease Sale 52. Bureau of Land Management, U.S. Department of the Interior.

Brandt, L.K. 1973. Remarks on Fine Screen Shakers. *In:* Proceeding of a Rotary Drilling Conference of IADC, Houston, Texas, March 1973.

Cagle, W.S. 1987. Solids Control Update, Part 1. Shale Shakers and Centrifugal Pumps. Petroleum Engineer International. July 1987. pp 37–42.

Cagle, W.S. 1987. Solids Control Update, Part 2. Degassers, Hydrocyclones, and Mud Cleaners. Petroleum Engineer International. August 1987. pp 32–36.

Cagle, W.S. 1987. Solids Control Update, Part 3. Centrifuges. Petroleum Engineer International. September 1987. pp 46–50.

Cagle, W.S. 1987. Solids Control Update, Part 4. Auxiliary Equipment. Petroleum Engineer International. October 1987. pp 41–45.

Canter, L.W. 1985. Drilling Waste Disposal: environmental problems and issues. *In:* Proceedings of a National Conference on Disposal of Drilling Wastes. Univ. of Okla. Environmental and Ground Water Institute.

Churchwell, R.C. 1981. Closed-loop Systems Control Mud Solids. Petroleum Engineer International. September 1981. pp 132–140.

EPA. 1986. Wastes from the Exploration, Development and Production of Crude Oil, Natural Gas and Geothermal Energy. Interim Technical Report. EPA/530–SW–86–051. October 1986.

Froment, T.D., Rodt, G.M., Houwen, O.H. and Titreville, B. 1986. A drilling Contractor Tests Solids Control Equipment. IADC/SPE Drilling Conference, Dallas, Texas 1986.

Hanson et al. 1986. A review of Mud and Cuttings Disposal for Offshore and Land based Operations. *In:* Proceedings of a National Conference on Drilling Muds. Univ. of Okla. Environmental and Ground Water Institute.

Hoberock, L.L. and Williams, M.P. 1982. Solids Control for the Man on the Rig, Part 1. Solids Removal, Economics and Shale Shaker Selection. Petroleum Engineer International. October 1982. pp 58–84.

IMCO Services. 1978. Applied Mud Technology Manual. Sixth Edition. A Division of Halliburton Company, Houston, Texas.

Leyendecker. E.A. 1986. Planning a Drilling Fluid Program. *In:* Proceedings of a National Conference on Drilling Muds. Univ. of Okla. Environmental and Groundwater Institute.

Moore. L.P. 1974. Drilling Practices Manual. The Petroleum Publishing Company, Tulsa, Okla. 448 pp.

Neiderhardt, D. 1985. Rig-site system allows water reuse, cuts cleanup costs. Oil and Gas Jour. March 4, 1985. pp 88–94.

Ormsby, G.S. 1973. Why your removal system won't remove. *In:* Proceeding of a Rotary Drilling Conference of IADC, Houston, Texas, March 1973.

Ormsby, G.S. 1974. Drilling Fluids Solids Removal. *In:* Moore, L.P. Drilling Practices Manual. The Petroleum Publishing Company, Tulsa, Okla. 448 pp.

Rafferty, J.H. 1985. Recommended Practices for the Reduction of Drill Site Wastes. *In:* Proceedings of a National Conference on the Disposal of Drilling Wastes. Univ. of Okla. Environmental and Ground Water Institute.

Robinson, L.H. 1988. Proper Solids Control—Key to Good Drilling Practices. Petroleum Engineer International. June 1988. pp 42–43.

Rogers, W.F., et al. eds. 1969. Principles of Drilling Fluid Control. Twelfth Edition. University of Texas at Austin, Austin, Texas, 215 pp.

SWACO Geolograph. 1989. Solids Control Manual. Unpublished.

Young, G.A. 1987. An Experimental Investigation of the Performance of a three inch Hydrocyclone. SPE/IADC Drilling Technology Conference, New Orleans March 1987.

TABLE 1.—DISCHARGE, PERMIT CONDITION AND STATUTORY BASIS

Discharge and permit condition	Statutory basis
Drilling muds:	
No discharge	BAT, LWQS.
Drill cuttings:	
No discharge	BAT, LWQS.
Treated wastewater from dewatering activities:	
No free oil	LDEQ permit.
Oil and grease: (15 mg/l daily max.).	BCT, LDEQ permit.
Total suspended solids (50 mg/l).	BCT, LDEQ permit.
Chemical oxygen demand (125 mg/l).	LDEQ permit.
pH (6.0–9.0)	BCT, LDEQ permit.
Chlorides: (500 mg/l)	LDEQ permit.
Total chromium (0.5 mg/l)	LDEQ permit.
Zinc (5.0 mg/l)	LDEQ permit.
Monitor volume	Section 308.
Deck drainage:	
No free oil	BCT, LDEQ permit.
Monitor volume	Section 308.
Formation test fluid:	
No discharge (to rivers, lakes, streams, or freshwater to intermediate wetlands)—	
No free oil	BCT, LDEQ permit.
pH (6.0–9.0)	BCT.
Monitor volume	Section 308

TABLE 1.—DISCHARGE, PERMIT CONDITION AND STATUTORY BASIS—Continued

Discharge and permit condition	Statutory basis
Well treatment, completion and workover fluid:	
No discharge (to rivers, lakes, streams, or freshwater to intermediate wetlands)—	
Priority pollutants (no discharge).	BMP.
No free oil	BCT, LDEQ permit.
pH (6.0–9.0)	BCT.
Monitor volume	Section 308.
Sanitary waste:	
No floating solids	BCT.

TABLE 1.—DISCHARGE, PERMIT CONDITION AND STATUTORY BASIS—Continued

Discharge and permit condition	Statutory basis
Biological oxygen demand (45 mg/l).	BCT, LDEQ permit.
Total suspended solids (45 mg/l).	BCT, LDEQ permit.
Fecal coliform (200/100 ml)	BCT, LDEQ permit.
Monitor flow	Section 308.
Domestic waste:	
No discharge (food waste & incineration ash).	MARPOL 73/78, Annex V.
Miscellaneous discharges:	
No free oil	BCT, LDEQ permit.

TABLE 1.—DISCHARGE, PERMIT CONDITION AND STATUTORY BASIS—Continued

Discharge and permit condition	Statutory basis
All discharges:	
No halogenated phenols	BMP.
No floating solids or foam	BCT.
No discharge of rubbish, trash or refuse.	Section 402(a)(1).
Minimize use of surfactants, dispersants and detergents.	BMP.

TABLE 2—MODEL WELL INPUT PARAMETERS

Engineering Data:			
Drilled Interval (ft)	800	5,400	15,000
Number of Days	3	8	39
Bit Size (in)	17.5	12.3	7.9
Casing Depth (ft)	100	800	5,400
Avg. Hole Washout (%)	40	30	15
Avg. Mud Wt. (lb/gal)	8.6	8.9	9.1
Low Grav. Solids (%)	4.0	4.0	5.0
Pit Volume (bbls)	700	700	700
Calc. Hole Volume (bbls)	372.2	1,162.8	1,525.8
Total Fluid Volume (bbls)	1,072.2	1,862.8	2,225.8
Drill Solids Generated (bbls)	303.3	793.6	605.5
Drilling Expenditures:			
Number of Days on Location	50		
Total Well Cost (AFE)	$1,680,000		
Drilling Barge (fuel & marine pkg)	420,000	$8400/day	(25%)
Drilling Intangibles (mud, bits, etc)	537,600		(32%)
Tubulars (casing, well head, etc)	722,400		(43%)
Disposal Expenditures:			
Shale Barge Rental ($/day)	180		
Tug Rental ($/day)	1,400		
Mud & Cuttings Disposal & Trans. ($/bbl)	10		

TABLE 3.—ECONOMIC SCENARIO 1

Engineering Data:				
Drilled Interval (ft)	800	5,400	15,000	Well
Drill Solids in Mud System (bbls)	303.3	793.6	605.5	
Equipment Removal (bbls)	115.3	301.6	230.1	
Liquids lost w/Solids (bbls)	288.2	753.9	575.2	
Solids Remaining in Mud System (bbls)	188.1	492.0	375.4	
Dilution Needed (bbls)	3,761.3	9,840.6	7,507.9	
Cuttings/Sludge Generated (bbls)	404	1,055	805	2,264
Liquid Mud Generated (bbls)	3,761	9,841	7,508	21,110

Cost Analysis:	
Vol of Fluids for Disposal (23,374 bbls @ $10/bbl)	$233,740
Based on 38 percent equipment efficiency.	
Barge Rental (2 barges @ $180/day for 50 days)	18,000
Average shale barge capacity assumed to be 1,400 bbls.	
Tug Rental (17 hauls @ $1,500)	25,500
Does not include cost saving due to long term contracts nor does it assume that the rig tug could be used to haul the shale barges to collection terminal.	
Retro-fitting Costs (rig equipment)	0
No additional cost when using rig equipment.	
Solids Equipment Rental ($200/day for 50 days)	10,000
Total Expenditure	287,240

TABLE 4.—ECONOMIC SCENARIO 2

Engineering data				
Drilled interval (ft)	800	5,400	15,000	Well.
Drill solids in mud system (bbls)	303.3	793.6	605.5	
Equipment removal (bbls)	188.1	492.0	375.4	
Liquids lost w/ solids (bbls)	400.1	1046.9	798.7	
Solids remaining in mud system (bbls)	115.3	301.6	230.1	
Dilution needed (bbls)	2,305.3	6,031.3	4,601.6	
Cuttings/ sludge generated (bbls)	588	1,539	1,174	3,301
Liquid mud generated (bbls)	2,305	6,031	4,602	12,938

Cost analysis:	
Vol. of fluids for disposal (16,239 bbls @ $10/bbl)	$162,390
Based on 62 percent equipment efficiency.	
Barge rental (2 barges @ $180/day for 50 days)	18,000
Average shale barge capacity assumed to be 1,400 bbls.	
Tug rental (12 hauls @ $1,500)	18,000
Does not include cost saving due to long term contracts nor does it assume that the rig tug could be used to haul the shale barges to collection terminal.	
Retro-fitting costs (intermediate equipment)	35,000
Cost includes a cantilevered configuration over drill barge and re-plumbing mud flow lines.	
Solids equipment rental ($600/day for 50 days)	30,000
Subtotal	263,390
Drilling fluid savings	(14,505)
Savings to operator based on equipment efficiency and cost of drilling fluid.	
Total expenditure	248,885

TABLE 5.—ECONOMIC SCENARIO 3

Engineering data:				
Drilled interval (ft)	800	5.400	15,000	Well.
Drill solids in mud system (bbls)	303.3	793.6	605.5	
Equipment removal (bbls)	273.0	714.2	544.9	
Liquids lost w/solids (bbls)	420.0	1,098.8	838.3	
Solids remaining in mud system (bbls)	30.3	79.4	60.5	

TABLE 5.—ECONOMIC SCENARIO 3—Continued

Dilution needed (bbls)	606.7	1,587.2	1,210.9	
Cuttings/ sludge generated (bbls)	693	1,813	1,383	3,889
Liquid mud generated (bbls)	607	1,587	1,211	3,405

Cost analysis:	
Vol. of fluids for disposal (7,294 bbls @ $10/bbl)	$72,940
Based on 90 percent equipment efficiency.	
Barge rental (2 barges @ $180/day for 50 days)	18,000
Average shale barge capacity assumed to be 1,400 bbls.	
Tug rental (6 hauls @ $1,500)	9,000
Does not include cost saving due to long term contracts nor does it assume that the rig tug could be used to haul the shale barges to collection terminal.	
Retro-fitting Costs (closed cycle system)	35,000
Cost includes a cantilevered configuration over drill barge and re-plumbing mud flow lines.	
Solids equipment rental ($1600/day for 50 days)	80,000
Subtotal	214,940
Drilling Fluid Savings	(31,500)
Savings to operator based on equipment efficiency and cost of drilling fluid.	
Total expenditure	183,440

TABLE 6—SUMMARY OF DRILLING SCENARIO'S 1, 2, & 3

	Scenario 1	Scenario 2	Scenario 3
Equipment Efficiency (%)	38	62	90
Well Depth (ft)	15,000	15,000	15,000
Equipment Day Rate	$200	$600	$1,600
Days to Drill Well	50	50	50
Equipment Cost	$10,000	$30,000	$80,000
Drilling mud—Haul off (bbls)	21,110	12,938	3,405
Drill cuttings—Haul off (bbls)	2,264	3,301	3,889
Total Volume for Disposal (bbls)	23,374	16,239	7,294
Average Haul off Bbls/day	467	325	146
Haul off Bbls/ft	1.56	1.08	.49
Disposal Cost/ft (@ $10/bbl)	$15.58	$10.83	$4.87
Solids Equipment Cost/ft	$0.67	$2.00	$5.33
Misc. Costs/ft (retrofitting, tug and barge rentals)	$2.90	$4.73	$4.13
Mud Savings $/ft drilled	($0.00)	($0.97)	($2.10)
Total Cost/ft	$19.15	$16.59	$12.23
Total Expenditure	$278,250	$248,850	$183,450
Total Well Cost (AFE)	$1,680,000	$1,680,000	$1,680,000
Percent of AFE	17.1	14.8	10.9

General Permit Authorization To Discharge Under the National Pollutant Discharge Elimination System in the Coastal Waters of Louisiana, Permit No. LAG330000

In compliance with the provisions of the Federal Water Pollution Control Act, as amended (33 U.S.C. 1251 *et seq:* the "Act"), the following discharges are authorized from coastal oil and gas facilities (defined in 40 CFR part 435, subpart D) to receiving waters, described below (encompassing the coastal waters of Louisiana) in accordance with effluent limitations, monitoring requirements and other conditions set forth in parts I, II, III, and IV thereof:

Drilling Fluids,
Drill Cuttings,
Deck Drainage,
Sanitary Wastes,
Domestic Wastes,
Desalinization Unit Discharge,
Diatomaceous Earth Filter Media,
Excess Cement Slurry,
Uncontaminated Ballast/Bilge Water,
Boiler Blowdown,
Blowout Preventer Control Fluid,
Well Treatment Fluids,
Workover Fluids,
Completion Fluids,
Formation Test fluids,
Treated Wastewater from Dewatered Drilling Fluids/Cuttings,
Muds, Cuttings, and Cement at the Seafloor,
Uncontaminated Seawater,
Uncontaminated Freshwater.

This permit authorizes discharges to the coastal waters of Louisiana from oil and gas facilities engaged in production, field exploration, drilling, well completion, and well treatment operations. Produced water, produced sand and source water and sand discharges are excluded from coverage under this general permit, but will however, be regulated under a separate general coastal permit.

For the purpose of this NPDES general permit, the 40 CFR part 435 subpart D, Oil and Gas Extraction Point Source Subcategory definition of "coastal" shall describe the area authorized for coverage under this permit, including the geographic area (land and water areas) suspended from the onshore subcategory described in 40 CFR part 435 subpart C. The guidelines definition of coastal used here, is described as "any body of water landward of the territorial seas or any wetlands adjacent to such waters" (40 CFR 435.41(e). The term wetlands shall mean "those surface areas which are inundated or saturated by surface or ground water at a frequency and duration sufficient to support, and that under normal circumstances do support, a prevalence of vegetation typically adapted for life in saturated soil conditions. Wetlands generally include, swamps, marshes, bogs and similar areas" (40 CFR 435.41(f). Territorial seas refers to "the belt of the seas measured from the line of ordinary low water along that portion of the coast which is direct contact with the open sea and the line marking the seaward limit of inland waters, and extending seaward a distance of three miles." (See Clean Water Act section 502).

The coastal permit area as described in the regulations is broad by definition and includes all rivers, streams and lakes, bays, estuaries and adjacent wetlands that occur inland of the territorial seas. The coastal subcategory also includes the geographic area along the coast of Texas and Louisiana (Chapman line area) which was originally defined as coastal in EPA's 1976 Interim Final Regulations for the onshore subcategory (See Suspension of Regulations, 47 FR 31554, July 21, 1982). A facility is considered to be covered under the proposed general permit if the location of the wellhead is within the described permit area.

This permit does not authorize discharge from "new sources" as defined in 40 CFR 122.2.

This permit shall become effective on [_____].

This permit and the authorization to discharge shall expire at midnight, [5 years from date of issuance].

Signed this [_____] day of [_____].

Myron O. Knudson,

Director, Water Management Division, EPA Region 6.

Permit No LAG330000

Part I

Section A. General Permit Coverage

1. Intent to be Covered. Written notification of intent to be covered, including the legal name and address of the operator, the lease block number assigned by the Louisiana Minerals Board or, if none, the name commonly assigned to the lease area, and the type of facility to be covered, and the water depth at which it is located, shall be submitted:

(a) By operators in lease blocks that are located within the geographic scope of this permit, within 45 days of the effective date of this permit.

Note: Operators must request coverage under this general permit or have an effective individual permit.

(b) By operators of leases obtained subsequent to the effective date of this permit fourteen days prior to the commencement of discharge.

2. Termination of Operations. Lease block operators shall notify the Regional Administrator within 60 days after the permanent termination of discharges from their facilities. In addition, lease block operators shall notify the Regional Administrator within 30 days of any transfer of ownership.

Section B. NPDES Individual Versus General Permit Applicability

1. The Regional Administrator May Require Application for an Individual NPDES Permit. The Regional Administrator may require any person authorized by this permit to apply for and obtain an individual NPDES permit when:

(a) The discharge(s) is a significant contributor of pollution;

(b) The discharger is not in compliance with the conditions of this permit;

(c) A change has occurred in the availability of the demonstrated technology or practices for the control or abatement of pollutants applicable to the point sources;

(d) Effluent limitation guidelines are promulgated for point sources covered by this permit;

(e) A Water Quality Management Plan containing requirements applicable to such point source is approved;

(f) The point source(s) covered by this permit no longer:

(1) Involve the same or substantially similar types of operations;

(2) Discharge the same types of wastes;

(3) Require the same effluent limitations or operating conditions;

(4) Require the same or similar monitoring; or

(5) In the opinion of the Regional Administrator, are more appropriately controlled under an individual permit than under a general permit.

The Regional Administrator may require any operator authorized by this permit to apply for an individual NPDES permit only if the operator has been notified in writing that a permit application is required.

2. An Individual NPDES Permit May Be Requested. (a) Any operator authorized by this permit may request to be excluded from the coverage of this general permit by applying for an individual permit. The operator shall submit an application together with the reasons supporting the request to the Regional Administrator no later than September 5, 1990.

(b) When an individual NPDES permit is issued to an operator otherwise subject to this general permit, the applicability of this permit to the owner

or operator is automatically terminated on the effective date of the individual permit.

3. General Permit Coverage May Be Requested. A source excluded from coverage under this general permit solely because it already has an individual permit may request that its individual permit be revoked, and that it be covered by this general permit. Upon revocation of the individual permit, this general permit shall apply to the source after the notification of intent to be covered is filed (see A.1. above).

Part II

Section A. Effluent Limitations and Monitoring Requirements

Specific effluent limitations and monitoring requirements are discussed below. They are organized by the type of discharge in the text, and by discharge type, effluent limitation and monitoring requirements in Table 1.

1. Drilling Fluids—(a) Applicability. Permit conditions apply to all drilling fluids (muds) that are discharged, including fluids adhering to cuttings.

(b) Prohibitions. This permit prohibits the discharge of all drilling fluids.

2. Drill Cuttings. Special Note: The permit prohibitions and limitations that apply to drilling fluids also apply to drilling fluids that adhere to drill cuttings. Any permit condition that applies to the drilling fluid system, therefore, also applies to cuttings discharges.

(a) Prohibitions. This permit prohibits the discharge of drill cuttings.

3. Treated Wastewater from Drilling Fluids/Cuttings, Dewatering Activities and Pit Closure Activities—(a) Applicability. Treated wastewater from dewatered drill site reserve pits, shale barges, ring levees and inactive/abandoned reserve pits.

(b) Limitations—Free Oil. Discharges containing free oil are prohibited as determined by a visual sheen on the surface of the receiving water. Monitoring must be accomplished once per day, when discharging during conditions when an observation of a sheen is possible. The number of days a sheen is detected must be recorded.

[Exception] Treated wastewater may be discharged at any time if the operator uses the static sheen method for detecting free oil.

Oil and Grease. Treated Wastewater must meet a 15 mg/l daily maximum limitation.

Total Suspended Solids. Treated Wastewater shall not exceed 50 mg/l daily maximum.

Chemical Oxygen Demand. Treated wastewater shall not exceed 125 mg/l daily maximum.

pH. Discharges of treated wastewater must meet a pH limitation of not less than 6.0 and not greater than 9.0 at the point of discharge.

Chlorides. Treated wastewater shall not exceed a 500 mg/l daily maximum discharge limitation.

Total Chromium. Discharges of treated wastewater shall meet a 0.5 mg/l daily maximum limitation.

Zinc. Treated wastewater shall not exceed 5.0 mg/l daily maximum for zinc.

Monitoring. The monitoring frequency for the above limitations are once per day when discharging. However, if the effluent is batch treated and discharged, the monitoring requirements for all effluent characteristics are once per discharge event by grab sample.

(c) Other Monitoring—Volume. The volume (bbls) of discharged treated wastewater must be estimated once per day, when discharging. If the effluent is being batch treated and discharged then the estimated volume discharged in barrels must be recorded per discharge event.

4. Deck Drainage—(a) Limitations—Free Oil. Discharges containing free oil are prohibited as determined by a visual sheen on the surface of the receiving water. Monitoring must be accomplished once per day, when discharging during conditions when an observation of a sheen is possible. The number of days a sheen is detected must be recorded.

[Exception] Deck drainage may be discharged at any time if the operator uses the static sheen method for detecting free oil.

(b) Other Monitoring—Volume. Once per month, the total monthly volume (bbl) must be estimated.

5. Formation Test Fluid—(a) Prohibitions. There shall be no discharge of formation test fluids to lakes, rivers, streams, or freshwater to intermediate wetlands. In addition, discharges are prohibited to wildlife refuges, game preserves, scenic streams, or other specially protected lakes or waterbodies.

Note: Freshwater and intermediate wetland areas, wildlife refuges and game preserves can be identified from the 1978 Vegetative Type Map of the Louisiana (or any subsequent revisions), published by the Louisiana Department of Wildlife and Fisheries. The listing of scenic streams in Louisiana is found in the Louisiana Department of Wildlife and Fisheries publication "Natural and Scenic Streams System", (1981).

[Exception] Discharge of formation test fluids are allowed on the Mississippi River below Venice, Atchafalaya River below Morgan City, and Wax Lake Outlet. Discharges are also allowed to waterbodies and adjacent wetlands in brackish or saline marsh areas.

(b) Limitations—Free Oil. Discharges containing free oil are prohibited as determined by a visual sheen on the surface of the receiving water. Discharge is authorized only at times when a visual sheen observation is possible. The monitoring frequency is once per discharge.

[Exception] Formation test fluids may be discharged at any time if the operator uses the static sheen method for detecting free oil.

pH. Discharges of formation test fluid must meet a pH limitation of not less than 6.0 and not greater than 9.0. A grab sample must be taken once per discharge. Any spent acidic test fluids shall be neutralized before discharge such that the pH at the point of discharge meets the limitation.

(c) Other Monitoring—Volume. Once per discharge, the total volume reported as number of barrels sent downhole during testing and the number of barrels discharged shall be estimated and reported once per month.

6. Well Treatment Fluids, Completion Fluids, Workover Fluids—(a) Prohibitions. There shall be no discharge of well completion, treatment or workover fluids to lakes, rivers, streams, or freshwater to intermediate wetlands. In addition, discharges are prohibited to wildlife refuges, game preserves, scenic streams, or other specially protected lakes or waterbodies.

Note: Freshwater and intermediate wetland areas, wildlife refuges and game preserves can be identified from the 1978 Vegetative Type Map of the Louisiana (or any subsequent revisions), published by the Louisiana Department of Wildlife and Fisheries. The listing of scenic streams in Louisiana is found in the Louisiana Department of Wildlife and Fisheries publication "Natural and Scenic Streams System", (1981).

[Exception] Discharge of well completion, treatment or workover fluids are allowed on the Mississippi River below Venice, Atchafalaya River below Morgan City, and Wax Lake Outlet. Discharges are also allowed to waterbodies and adjacent wetlands in brackish or saline marsh areas.

Priority (Toxic) Pollutants. For well treatment fluids, completion fluids, and workover fluids, the discharge of priority pollutants (see Appendix A) is prohibited, except in trace amounts. If well completion, treatment or workover fluids are discharged, the permittee is

required to certify by letter to the Director of the Water Management Division that the discharge did not contain priority pollutants, except in trace amounts. This letter shall be sent to the same address as the discharge monitoring reports.

Information on the specific chemical composition of additives used in these fluids, and their concentrations in the fluid, must be recorded if priority pollutants are present, in any amount, in these additives.

(b) Limitations—Free Oil. Discharges containing free oil are prohibited as determined by a visual sheen on the surface of the receiving water. Discharge is authorized only at times when a visual sheen observation is possible. The monitoring frequency is once per discharge.

[Exception] Well treatment fluids, completion fluids, or workover fluids may be discharged at any time if the operator uses the static sheen method for detecting free oil.

pH. Well treatment, completion and workover fluids must meet a pH limitation of not less than 6.0 and not greater than 9.0 prior to being discharged. Sampling must be accomplished once per day when discharging.

(c) Other Monitoring—Volume. Once per month, the average discharge volume (bbls) must be estimated.

7. Sanitary Waste—(a) Prohibitions—Solids. No floating solids may be discharged.

(b) Limitations—Biological Oxygen Demand (BOD5). Sanitary waste discharges must meet a 45 mg/l daily maximum limitation. A grab sample must be collected and analyzed once per quarter.

Total Suspended Solids. Sanitary waste discharges shall meet a 45 mg/l daily maximum limitation. A grab sample shall be collected and analyzed once per quarter.

Fecal Coliform. Sanitary waste discharges must meet a daily maximum limitation of 200/100 ml for fecal coliform. A grab sample must be taken and analyzed once per quarter.

(c) Other Monitoring—Flow. Once per month, the average flow (million gallons per day; MGD) must be estimated.

8. Domestic Waste—(a) Prohibitions—Solids. This permit prohibits the discharge of "garbage" including food wastes (comminuted or not), incineration ash and clinkers. Graywater is not considered garbage under this definition.

9. Excess Cement Slurry—(a) Prohibitions. There shall be no discharge of excess cement slurry to lakes, rivers, streams, or freshwater to intermediate wetlands. In addition, discharges are prohibited to wildlife refuges, game preserves, scenic streams, or other specially protected lakes or waterbodies.

Note: Freshwater and intermediate wetland areas, wildlife refuges and game preserves can be identified from the 1978 Vegetative Type Map of the Louisiana (or any subsequent revisions), published by the Louisiana Department of Wildlife and Fisheries. The listing of scenic streams in Louisiana is found in the Louisiana Department of Wildlife and Fisheries publication "Natural and Scenic Streams System", (1981).

[Exception] Discharge of excess cement slurry is allowed on the Mississippi River below Venice, Atchafalaya River below Morgan City, and Wax Lake Outlet. Discharges are also allowed to waterbodies and adjacent wetlands in brackish or saline marsh areas.

(b) Limitations—Free Oil. Discharges containing free oil are prohibited as determined by a visual sheen on the surface of the receiving water. Discharge is authorized only at times when a visual sheen observation is possible. The monitoring frequency is once per discharge.

[Exception] Excess cement slurry may be discharged at any time if the operator uses the static sheen method for detecting free oil.

10. Miscellaneous Discharges: Desalinization Unit Discharge, Blowout Preventer Fluid, Uncontaminated Ballast Water, Uncontaminated Bilge Water, Mud, Cuttings, and Cement at the Seafloor, Uncontaminated Seawater, Uncontaminated Freshwater, Boiler Blowdown, Diatomaceous Earth Filter Media—(a) Limitations—Free Oil. Discharges containing free oil are prohibited as determined by a visual sheen on the surface of the receiving water. Monitoring must be accomplished once per day, when discharging during conditions when an observation of a sheen is possible. The number of days a sheen is detected must be recorded.

[Exception] Miscellaneous discharges may occur at any time if the operator uses the static sheen method for detecting free oil.

11. Other Discharge Conditions—(a) Prohibitions—Halogenated Phenol Compounds. There shall be no discharge of halogenated phenol compounds.

Rubbish, Trash, and Other Refuse. The discharge of any solid material not authorized in the permit (as described above) is prohibited.

(b) Limitations—Floating Solids or Visible Foam. There shall be no discharge of floating solids or visible foam in other than trace amounts.

Surfactants, Dispersants, and Detergents. The discharge of surfactants, dispersants, and detergents used to wash working areas shall be minimized except as necessary to comply with applicable State and Federal safety requirements.

Section B. Other Conditions

1. Samples of Wastes—If requested, the permittee shall provide EPA with a sample of any waste in a manner specified by the Agency.

Part III

Section A. General Conditions

1. Introduction. In accordance with the provisions of 40 CFR part 122.41, et seq., this permit incorporates by reference all conditions and requirements applicable to NPDES Permits set forth in the Clean Water Act, as amended (hereinafter known as the "Act"), as well as ALL applicable CFR regulations.

2. Duty to Comply. The permittee must comply with all conditions of this permit. Any permit non-compliance constitutes a violation of the Clean Water Act and is grounds for enforcement action or for requiring a permittee to apply for and obtain an individual NPDES permit.

3. Toxic Pollutants. Notwithstanding III.A.5 below, if any toxic effluent standard or prohibition (including any schedule of compliance specified in such effluent standard or prohibition) is promulgated under section 307(a) of the Clean Water Act for a toxic pollutant which is present in the discharge and that standard or prohibition is more stringent than any limitation on the pollutant in this permit, this permit shall be modified or revoked and reissued to conform to the toxic effluent standard or prohibition and the permittee so notified.

The permittee shall comply with effluent standards or prohibitions established under section 307(a) of the Clean Water Act for toxic pollutants within the time provided in the regulations that established those standards or prohibitions, even if the permit has not yet been modified to incorporate the requirement.

4. Duty to Reapply. If the permittee wishes to continue an activity regulated by this permit after the expiration date of this permit, the permittee must submit notice of intent to be covered and must apply for a new permit. Continuation of the expiring permit shall be governed by regulations at 40 CFR 122.6 and any subsequent amendments.

5. Permit Flexibility. This permit may be modified, revoked and reissued, or terminated for cause including, but not limited to, the following (see 40 CFR 122.62.64):

(a) Violation of any terms or conditions of this permit;

(b) Obtaining this permit by misrepresentation or failure to disclose fully all relevant facts;

(c) A change in any condition that requires either a temporary or a permanent reduction or elimination of the authorized discharge; or

(d) A determination that the permitted activity endangers human health or the environment and can only be regulated to acceptable levels by permit modification or termination.

The filing of a request by the permittee for a permit modification, revocation and reissuance, or termination, or a notification of planned changes or anticipated noncompliance, does not stay any permit condition.

This permit shall be modified, or alternatively, revoked and reissued, to comply with any applicable effluent standard or limitation issued or approved under section 301, 304, and 307 of the Clean Water Act, if the effluent standard or limitation so issued or approved:

(a) Contains different conditions or limitations than any in the permit; or

(b) Controls any pollutant not limited in the permit.

The permit as modified or reissued under this paragraph shall also contain any other requirements of the Act then applicable.

6. Property Rights. The issuance of this permit does not convey any property rights of any sort, or any exclusive privileges, nor does it authorize any injury to private property or any invasion of personal rights, nor any infringement of Federal, State, or local laws or regulations.

7. Duty to Provide Information. The permittee shall furnish to the Regional Administrator, within a reasonable time, any information which the Regional Administrator may request to determine whether cause exists for modifying, revoking and reissuing, or terminating this permit, or to determine compliance with this permit. The permittee shall also furnish to the Regional Administrator upon request, copies of records required to be kept by this permit.

8. Civil and Criminal Liability. Except as provided in permit conditions on "Bypassing" and "Upsets" (see III.B.4 and III.B.5), nothing in this permit shall be construed to relieve the permittee from civil or criminal penalties for noncompliance. Any false or misleading misrepresentation or concealment of information required to be reported by the provisions of the permit, the ACT, or applicable CFR regulations which avoids or effectively defeats the regulatory purpose of the permit may subject the permittee to criminal enforcement pursuant to 18 U.S.C. section 1001.

9. Oil and Hazardous Substance Liability. Nothing in this permit shall be construed to preclude the institution of any legal action or relieve the permittee from any responsibilities, liabilities, or penalties to which the permittee is or may be subject under section 311 of the Clean Water Act.

10. State Laws. Nothing in this permit shall be construed to preclude the institution of any legal action or relieve the permittee from any responsibilities, liabilities, or penalties established pursuant to any applicable State law or regulation under authority preserved by section 510 of the Clean Water Act.

11. Severability. The provisions of this permit are severable, and if any provision of this permit or the application of any provision of this permit to any circumstance is held invalid, the application of such provision to other circumstances, and the remainder of this permit, shall not be affected thereby.

Section B. Operation and Maintenance of Pollution Controls

1. Need to Halt or Reduce Not a Defense. It shall not be a defense for a permittee in an enforcement action that it would have been necessary to halt or reduce the permitted activity in order to maintain compliance with the conditions of this permit.

2. Duty to Mitigate. The permittee shall take all reasonable steps to minimize or prevent any discharge in violation of this permit which has a reasonable likelihood of adversely affecting human health or the environment.

3. Proper Operation and Maintenance. The permittee shall at all times properly operate and maintain all facilities and systems of treatment and control (and related appurtenances) that are installed or used by the permittee to achieve compliance with the conditions of this permit. Proper operation and maintenance also includes adequate laboratory controls and appropriate quality assurance procedures. This provision requires the operation of backup or auxiliary facilities or similar systems that are installed by a permittee only when the operation is necessary to achieve compliance with the conditions of the permit.

4. Bypass of Treatment Facilities—(a) Definitions. (1) *Bypass* means the intentional diversion of waste streams from any portion of a treatment facility.

(2) *Severe property damage* means substantial physical damage to property, damage to the treatment facilities that causes them to become inoperable, or substantial and permanent loss of natural resources that can reasonably be expected to occur in the absence of a bypass. Severe property damage does not mean economic loss caused by delays in production.

(b) Bypass Not Exceeding Limitations. The permittee may allow any bypass to occur that does not cause effluent limitations to be exceeded, but only if it also is for essential maintenance to assure efficient operation. These bypasses are not subject to the provisions of section B, paragraphs 4.c and 4.d of this section.

(c) Notice. (1) Anticipated bypass. If the permittee knows in advance of the need for a bypass, it shall submit prior notice, if possible at least ten days before the date of the bypass.

(2) Unanticipated bypass. The permittee shall submit notice of an unanticipated bypass as required in section D, paragraph 6 (24-hour reporting).

(d) Prohibition of Bypass. (1) Bypass is prohibited, and the Regional Administrator may take enforcement action against a permittee for bypass, unless:

(a) Bypass was unavoidable to prevent loss of life, personal injury, or severe property damage;

(b) There were no feasible alternatives to the bypass, such as the use of auxiliary treatment facilities, retention of untreated wastes, or maintenance during normal periods of equipment downtime. This condition is not satisfied if adequate back-up equipment should have been installed in the exercise of reasonable engineering judgment to prevent a bypass that occurred during normal periods of equipment downtime or preventive maintenance; and

(c) The permittee submitted notices as required under Section B, paragraph 4.c.

(2) The Regional Administrator may approve an anticipated bypass, after considering its adverse effects, if the Regional Administrator determines that it will meet the three conditions listed above in section B, paragraph 4.d.(1).

5. Upset Conditions—(a) Definition. Upset means an exceptional incident in which there is unintentional and temporary noncompliance with technology-based permit effluent limitations because of factors beyond

the reasonable control of the permittee. An upset does not include noncompliance to the extent caused by operational error, improperly designed treatment facilities, inadequate treatment facilities, lack of preventive maintenance, or careless or improper operation.

(b) Effect of an Upset. An upset constitutes an affirmative defense to an action brought for noncompliance with such technology-based permit effluent limitations if the requirements of section B, paragraph 5.(c) are met. No determination made during administrative review of claims that noncompliance was caused by upset, and before an action for noncompliance, is final administrative action subject to judicial review.

(c) Conditions Necessary for a Demonstration of Upset. A permittee who wishes to establish the affirmative defense of upset shall demonstrate, through properly signed, contemporaneous operating logs, or other relevant evidence, that:

(1) An upset occurred and that the permittee can identify the cause(s) of the upset;

(2) The permitted facility was at the time being properly operated;

(3) The permittee submitted notice of the upset as required in section D, paragraph 5; and,

(4) The permittee complied with any remedial measures required under section B, paragraph 2.

(d) Burden of Proof. In any enforcement proceeding the permittee seeking to establish the occurrence of an upset has the burden of proof.

6. Removed Substances. Solids, sludges, filter backwash, or other pollutants removed in the course of treatment or control of wastewaters shall be disposed of in a manner such as to prevent any pollutant from such materials from entering navigable waters. Any substance specifically listed within this permit may be discharged in accordance with specified conditions, terms, or limitations.

Section C. Monitoring and Records

1. Inspection and Entry. The permittee shall allow the Regional Administrator or an authorized representative, upon the presentation of credentials and other documents as may be required by law, to:

(a) Enter upon the permittee's premises where a regulated facility or activity is located or conducted, or where records must be kept under the conditions of this permit;

(b) Have access to and copy, at reasonable times, any records that must be kept under the conditions of this permit;

(c) Inspect at reasonable times any facilities, equipment (including monitoring and control equipment),practices, or operations regulated or required under this permit; and

(d) Sample or monitor at reasonable times, for the purposes of assuring permit compliance or as otherwise authorized by the Clean Water Act, any substances or parameters at any location.

2. Representative Sampling. Samples and measurements taken as required herein shall be representative of the volume and nature of the monitored discharge.

3. Retention of Records. The permittee shall retain records of all monitoring information, including all calibration and maintenance records and all original strip chart recordings for continuous monitoring instrumentation, and copies of all reports required by this permit, for a period of at least 3 years from the date of the sample, measurement, or report. This period may be extended by request of the Regional Administrator at any time.

The operator shall maintain records at development and production facilities for 3 years, wherever practicable and at a specific shore-based site whenever not practicable. The operator is responsible for maintaining records at exploratory facilities while they are discharging under the operator's control and at a specified shore-based site for the remainder of the 3-year retention period.

4. Record Contents. Records of monitoring information shall include:

(a) The date, exact place, and time of sampling or measurements,

(b) The individual(s) who performed the sampling or measurements,

(c) The date(s) analyses were performed,

(d) The individual(s) who performed the analyses,

(e) The analytical techniques or methods used, and

(f) The results of such analyses.

5. Monitoring Procedures. Monitoring must be conducted according to test procedures approved under 40 CFR part 136, unless other test procedures have been specified in this permit (*see* part IV.A., below).

6. Discharge Rate/Flow Measurements. Appropriate flow measurement devices consistent with accepted practices shall be selected, maintained, and used to ensure the accuracy and reliability of measurements of the volume of monitored discharges. The devices shall be installed, calibrated, and maintained to insure that the accuracy of the measurements are consistent with the accepted capability of that type of device. Devices selected shall be capable of measuring flows with a maximum deviation of less than ±10% from true discharge rates throughout the range of expected discharge volumes

Section D. Reporting Requirements

1. Planned Changes. The permittee shall give notice to the Regional Administrator as soon as possible of any planned physical alterations or additions to the permitted facility. Notice is required only when:

(a) The alteration or addition to a permitted facility may meet one of the criteria for determining whether a facility is a new source in 40 CFR 122.29(b) (48 FR 14153, April 1, 1983, as amended at 49 FR 38049, September 26, 1984); or

(b) The alteration or addition could significantly change the nature or increase the quantity of pollutants discharged. This notification applies to pollutants that are subject neither to effluent limitations in the permit, nor to notification requirements under 40 CFR 122.42(a)(1) (48 FR 14153, April 1, 1983, as amended at 49 FR 38049, September 26, 1984).

2. Anticipated Noncompliance. The permittee shall give advance notice to the Regional Administrator of any planned changes in the permitted facility or activity which may result in noncompliance with permit requirements.

3. Transfers. This permit is not transferable to any person except after notice to the Regional Administrator. The Regional Administrator may require modification or revocation and reissuance of the permit to change the name of the permittee and incorporate such other requirements as may be necessary under the Act.

4. Discharge Monitoring Reports. The operator of each lease block shall be responsible for submitting monitoring results for each facility within each lease block. If there is more than one facility (platform, jack-up, drilling barge, etc.), the discharge shall be designated in the following manner: 101 for the first facility; 201 for the second facility; 301 for the third facility; etc.

Monitoring results obtained during the previous 12 months shall be summarized and reported on a Discharge Monitoring Report (DMR) Form (EPA No. 3320–1). The highest monthly average for each facility shall be reported. The highest daily maximum sample taken during the reporting period shall be reported as the daily maximum concentration. (See

"Definitions" for more detailed explanations of these terms.)

If any category of waste (discharge) is not applicable due to the type of operation (e.g., drilling, production), either "no activity" or "no discharge" must be reported in the appropriate categories on the DMR. A blank on the DMR indicates a non-reported discharge and signifies a violation. If no activity occurs for a permitted facility "No Activity" must be written on the DMR and it must be signed and submitted on the reporting date.

Upon receipt of a notification of intent to be covered, (part I.A.) the permittee will be notified of its specific permit number applicable to that lease block. Furthermore, the Permittee will be informed of the discharge monitoring report due date for that facility.

All notices and reports required under this permit shall be sent to EPA Region 6 at the address below: Director, Water Management Division, USEPA, Region 6, P.O. Box 50625, Dallas, TX 75270.

5. Additional Monitoring by the Permittee. If the permittee monitors any pollutant more frequently than required by this permit, using test procedures approved under 40 CFR part 136 or as specified in this permit, the results of this monitoring shall be included in the calculation and reporting of the data submitted in the DMR. Such increased monitoring frequency shall also be indicated on the DMR.

6. Averaging of Measurements. Calculations for all limitations which require averaging of measurements shall utilize an arithmetic mean unless otherwise specified by the Regional Administrator in the permit.

7. Twenty-Four Hour Reporting. The permittee shall report any noncompliance which may endanger health or the environment (this includes any spill that requires oral reporting to the state regulatory authority). Information shall be provided orally within 24 hours from the time the permittee becomes aware of the circumstances. A written submission shall also be provided within 5 days of the time the permittee becomes aware of the circumstances. The written submission shall contain a description of the noncompliance and its cause; the period of noncompliance, including exact dates and times, and if the noncompliance has not been corrected, the anticipated time it is expected to continue; and steps taken or planned to reduce, eliminate, and prevent reoccurrence of the noncompliance. The Regional Administrator may waive the written report on a case-by-case basis if the oral report has been received within 24 hours.

The following shall be included as information which must be reported within 24 hours:

(a) Any unanticipated bypass which exceeds any effluent limitation in the permit;

(b) Any upset which exceeds any effluent limitation in the permit.

(c) Violations of a maximum daily discharge limitation or daily minimum toxicity limitation for any of the pollutants listed by the Regional Administrator in part III of the permit to be reported within 24 hours.

The reports should be made to Region 6 by telephone at (214) 655–6593. The Regional Administrator may waive the written report on a case-by-case basis if the oral report has been received within 24 hours.

8. Other Noncompliance. The permittee shall report all instances of noncompliance not reported under part III, section D, paragraphs 4 and 7 at the time monitoring reports are submitted. The reports shall contain the information listed in section D, paragraph 7.

9. Other Information. When the permittee becomes aware that it failed to submit any revellant facts in a permit application, or submitted incorrect information in a permit application or in any report to the Regional Administrator, it shall promptly submit such facts or information.

10. Changes in Discharges of Toxic Substances. For any toxic pollutant (see appendix A) that is not limited in this permit, either as an additive itself or as a component in an additive formulation, the permittee shall notify the Regional Administrator as soon as he knows or has reason to believe:

(a) That any activity has occurred or will occur which would result in the discharge of such toxic pollutants, on a routine or frequent basis, if that discharge will exceed the highest of the "notification levels" described at 40 CFR 122.42(a)(1) (i) and (ii);

(b) That any activity has occurred or will occur which would result in any discharge of such toxic pollutants, on a non-routine or infrequent basis, if that discharge will exceed the highest of the "notification levels" described at 40 CFR 122.42 (a)(2) (i) and (ii).

11. Signatory Requirements. All applications, reports, or information submitted to the Regional Administrator shall be signed and certified as required at 40 CFR 122.22.

(a) All permit applications shall be signed as follows:

(1) For a corporation: By a responsible corporate officer. For the purpose of this section, a responsible corporate officer means:

(i) A president, secretary, treasurer, or vice-president of the corporation in charge of a principal business function, or any other person who performs similar policy or decision making functions for the corporation, or

(ii) The manager of one or more manufacturing, production, or operating facilities employing more than 250 persons or having gross annual sales or expenditures exceeding $25 million (in second-quarter 1980 dollars), if authority to sign documents has been assigned or delegated to the manager in accordance with corporate procedures.

(2) For a partnership or sole proprietorship: by a general partner or the proprietor, respectively.

(b) Authorized Representative. All reports required by the permit and other information requested by the Regional Administrator shall be signed by a person described above or by a duly authorized representative of that person. A person is a duly authorized representative only if:

(1) The authorization is made in writing by a person described above.

(2) The authorization specifies either an individual or a position having responsibility for the overall operation of the regulated facility or activity, such as the position of plant manager, operator of a well or a well field, superintendent, or position of equivalent responsibility, or an individual or position having overall responsibility for environmental matters for the company. A duly authorized representative may thus be either a named individual or any individual occupying a named position; and,

(3) The written authorization is submitted to the Regional Administrator.

(c) Changes to Authorization. If an authorization under paragraph (b) of this section is no longer accurate because a different individual or position has responsibility for the overall operation of the facility, a new authorization satisfying the requirements of paragraph (b) of this section must be submitted to the Director prior to or together with any reports, information, or applications to be signed by an authorized representative.

(d) Certification. Any person signing a document under this section shall make the following certification:

I certify under penalty of law that this document and all attachments were prepared under my direction or supervision in accordance with a system designed to assure that qualified personnel properly gather and evaluate the information submitted. Based on my inquiry of the person or persons who manage the system, or those persons directly

responsible for gathering the information, the information submitted is, to the best of my knowledge and belief, true, accurate, and complete. I am aware that there are significant penalties for submitting false information, including the possibility of fine and imprisonment for knowing violations.

12. Availability of Reports. Except for data determined to be confidential under 40 CFR part 2, all reports prepared in accordance with the terms of this permit shall be available for public inspection at the office of the Regional Administrator. As required by the Clean Water Act, the name and address of any permit applicant or permittee, permit applications, permits, and effluent data shall not be considered confidential.

13. Compliance Schedules. Reports of compliance or noncompliance with, or any progress reports on, interim and final requirements contained in any compliance schedule of this permit shall be submitted no later than 14 days following each schedule date. Any reports of noncompliance shall include the cause of noncompliance, any remedial actions taken, and the probability of meeting the next scheduled requirement.

Section E. Penalties for Violations of Permit Conditions

1. Criminal. (a) *Negligent Violations.* The Act provides that any person who negligently violates permit conditions implementing sections 301, 302, 306, 307, 308, 318, or 405 of the Act is subject to a fine of not less than $2,500 nor more than $25,000 per day of violation, or by imprisonment for not more than 1 year, or both.

(b) *Knowing Violations.* The Act provides that any person who knowingly violates permit conditions implementing sections 301, 302, 306, 307, 308, 318, or 405 of the Act is subject to a fine of not less than $5,000 nor more than $50,000 per day of violation, or by imprisonment for not more than 3 years, or both.

(c) *Knowing Endangerment.* The Act provides that any person who knowingly violates permit conditions implementing sections 301, 302, 306, 307, 308, 318, or 405 of the Act and who knows at that time that he is placing another person in imminent danger of death or serious bodily injury is subject to a fine of not more than $250,000 per day of violation, or by imprisonment for not more than 15 years, or both.

(d) *False Statements.* The Act provides that any person who knowingly makes any false material statement, representation, or certification in any application, record, report, plan, or other document filed or required to be maintained under the Act or who knowingly falsifies, tampers with, or renders inaccurate, any monitoring device or method required to be maintained under the Act, shall upon conviction, be punished by a fine of not more than $10,000, or by imprisonment for not more than 2 years, or by both. If a conviction of a person is for a violation committed after a first conviction of such person under this paragraph, punishment shall be by a fine of not more than $20,000 per day of violation, or by imprisonment of not more than 4 years, or by both. (See section 309.c.4 of the Clean Water Act.)

2. Civil Penalties. The Clean Water Act at section 309 provides that any person who violates a permit condition implementing sections 301, 302, 306, 307, 308, 318, or 405 of the Clean Water Act is subject to a civil penalty not to exceed $25,000 per day of such violation. Any person who willfully or negligently violates permit conditions implementing sections 301, 302, 306, 307, or 308 of the Clean Water Act is subject to a fine of not less than $2,500 nor more than $25,000 per day of violation, or by imprisonment for not more than 1 year, or both. The maximum penalty may be assessed for each violation occurring on a single day. A single operational upset which leads to simultaneous violations of more than one pollutant parameter shall be treated as a single violation.

3. Administrative Penalties. The Act at section 309 allows that the Regional Administrator may assess a Class I or Class II civil penalty for violations of sections 301, 302, 306, 307, 308, 318, or 405 of the Act. A Class I penalty may not exceed $10,000 per violation except that the maximum amount shall not exceed $25,000. A Class II penalty may not exceed $10,000 per day for each day during which the violation continues, except that the maximum amount shall not exceed $125,000. An upset that leads to violations of more than one pollutant parameter will be treated as a single violation.

Part IV

Section A. Test Procedures

For test procedures not specified below, the only authorized procedures are those described at 40 CFR part 136.

1. Visual Sheen Test. The visual sheen test is used to detect free oil by observing the surface of the receiving water for the presence of a sheen while discharging. A sheen is defined as a 'silvery' or 'metallic' sheen, gloss, or increased reflectivity; visual color; or iridescence on the water surface. The operator must conduct a visual sheen test only at times when a sheen can be observed. This restriction eliminates observations at night or when atmospheric or surface conditions prohibit the observer from detecting a sheen (e.g. overcast skies, rough seas, etc.). Certain discharges can only occur if a visual sheen test can be conducted.

The observer must be positioned on the rig or platform, relative to both the discharge point and current flow at the time of discharge, such that the observer can detect a sheen should it surface down current from the discharge. For discharges that have been occurring for at least 15 minutes previously, observations may be made any time thereafter. For discharges of less than 15 minutes duration, observations must be made during both discharge and at 5 minutes after discharge has ceased. Discharges that are prohibited unless a visual sheen test can be conducted may be allowed if the operator uses the static sheen method for detecting free oil.

2. Static Sheen Test. The static sheen test shall be conducted according to the following methods; "Minimal Volume Static Sheen Test".

1. Scope and Application. This method is to be used as a compliance test for all discharges in this permit with the "no discharge of free oil" requirement, when it is not possible for the operator to accomplish a visual sheen observation on the surface of the receiving water. Free oil refers to any oil contained in a waste stream that when discharged will cause a film or sheen on or a discoloration of the surface of the receiving water.

2. Summary of Method. Samples of drilling fluids, deck drainage, well treatment, completion and workover fluids, formation test fluids, and treated wastewater from drilling fluid dewatering activities (5 ml) and samples of drill cuttings and produced sand (15 g, wet weight basis) are introduced into a 125 ml sample container (surface area approximately 26.5 cm^2 or 4.1 in^2) with test water from a drinking-quality water source. Fluid samples are introduced by automatic pipet into the container after filling with test water; samples of solids are introduced prior to adding test water. Care should be taken to minimize agitation when adding the fluid sample or the receiving water. Observations are made immediately and five minutes later. To aid in interpretation, an oil-free drilling fluid blank and a 0.5% volume to volume (v/v) oil contaminated drilling fluid standard are tested concurrently with the effluent samples. Observations are made to ascertain if these materials cause a sheen, iridescence, gloss, or increased reflectance on the surface of the test demonstration that the tested material contains "free oil", and

therefore results in a prohibition on its discharge into receiving waters.

3. Interferences. Residual "free oil" adhering to sampling containers and the stainless steel spatula (used to transfer drill cuttings or produced sand) will be the principal sources of contamination problems. These problems should only occur if improperly washed and cleaned equipment are used for the test. The use of disposable equipment minimizes the potential for similar contamination from pipets and test containers.

4. Apparatus, Materials, and Reagents.

4.1 Apparatus.

4.1.1 Sampling Containers—1 L polyethylene screw-cap containers.

4.1.2 Graduated cylinder—100 ml graduated cylinder required only for operators where predilution of mud discharges is required.

4.1.3 Triple-beam scale.

4.1.4 Automatic pipet capable of delivering 5 ml volumes of test samples, and disposable polypropylene pipet tips. (Equivalent to Oxford MACRO-SET 5–10 ml transfer pipet, product number 8885–890502 and MACRO-SET 5–10 ml pipet tips, approximately 132 mm x 11 mm, product number 8885–081508).

4.1.5 Stainless steel spatula.

4.1.6 Test container—120 ml (4 oz) polypropylene or polyethylene specimen or sample cups, with or without screw-cap covers; approximate dimensions 72 mm high × 60 mm top diameter (od) / 48 mm bottom diameter (od). Surface area approximately 26.5 cm^2 (59 mm id). (Equivalent to Fisherbrand 118 ml clear polypropylene screw-cap containers, product number 14–375–112A or Lab-Tek 4 oz polyethylene disposal cups, product number 4719).

4.2 Materials and Reagents.

4.2.1 Test water—from a drinking-quality water source.

4.2.2 Oil-free generic drilling fluids.

4.2.3 Samples of diesel oil or mineral oil, added either directly or as a component of a complex additive, or diesel oil from the rigs fuel supply.

5. Calibration. None currently specified.

6. Quality Control Procedures. Both negative control and positive control samples are tested concurrently with the effluent test sample. The negative control consists of an oil-free sample of the type of generic drilling mud that was being used at the time that sampling was performed. The positive control is this same generic mud to which a 0.5% (v/v) spike of oil has been freshly added (within 12 hours, if tightly sealed in a screw-capped container; within 1 hour if left open to air). The added oil should be one of the following: (a) If no oil or oil-based additives have been used in the mud system, diesel oil from the rig's fuel supply; (b) if a specific diesel or mineral oil has been used in the mud system, a sample of that oil.

7. Sample Collection and Handling.

7.1 Sampling containers must be thoroughly washed with detergent, rinsed a minimum of three times with fresh water, and allowed to air dry before samples are collected.

7.2 Samples of drilling fluid must be obtained once per day unless otherwise specified in a permit from the active mud pit; the sample volume should range between 200 ml and 500 ml.

7.3 Samples of drill cuttings or produced sand must be obtained from each type of solids control equipment from which the discharges occur on any given day prior to the addition of any washdown water; samples should range between 200 g and 500 g.

7.4 Samples of deck drainage, well treatment, completion and workover fluids, formation test fluids and treated wastewater from drilling fluid dewatering activities must be obtained from the holding facility prior to discharge; the sample volume should range between 200 ml and 500 ml.

7.5 Samples must be tightly sealed with screw-cap enclosures immediately after sample collection and tested no later than 1 hour after collection.

7.6 If predilution is imposed as a permit condition, drilling fluid samples must be diluted at the same ratio with the same prediluting water as the discharged muds until the slurry is homogeneously mixed. Muds should be mixed in screw-wap sampling containers by shaking.

8. Procedure.

8.1 Test water that will be used as "receiving water" in the test must be obtained from a drinking-quality source of water. The test container must have an air to liquid interface area of 26.5±2.5 cm^2. The surface of the water should be no more than 1 cm below the top of the test container.

8.2 Drilling fluid materials, deck drainage, well treatment, completion and workover fluids, formation test fluids, and treated wastewater from drilling fluid dewatering activities must be sampled by introducing the disposable pipet tip of the automatic pipet 1.5 inches below the surface of the effluent. Fluid is withdrawn from the effluent sample and carefully transferred to the test container without cleaning or scraping the pipet tip or touching it to the sides of either the effluent sample container or the test container. The effluent sample is then transferred to the test container by introducing the pipet tip containing the test sample into the test container at least 1.5 inches below the surface level of the test water, and the test material is then slowly injected into the test water. Care must be taken to keep the pipet tip stationary as possible while expelling the sample to avoid creating turbulence in the test container. Care also must be taken to avoid discharging air bubbles, which can occur especially for viscous muds, and which generally occur when most of the sample has been expelled. Test containers and pipet tips must be used only once and discarded.

8.3 Drill cuttings or produced sand should be transferred from the sampling container directly into the test containers. Test containers should be tared and 15 g of wet solids added to the container. Test water should be added slowly; the container should be tipped slightly so that water can be added along the wall of the container and not directly onto the solids material at the bottom of the container.

8.4 Observations must be made immediately and 5 minutes after the test material is transferred to the test container. Viewing points above the test container should be made from at least 3 perspectives of the test container, at viewing angles of approximately 60° and 30° from the horizontal. Illumination of the test container must be representative of adequate lighting for a working environment to conduct routine laboratory procedures. The order for the testing should be (1) the negative control, (2) the positive control, (3) the test sample(s).

8.5 Detection of a "silvery" or "metallic" sheen, gloss, or increased reflectivity; visual color; or iridescence on the surface of the test water shall constitute a demonstration of "free oil". These visual observations include droplets, patches, streaks, or sheets of such altered surface characteristics. Generally, the appearance of free oil, as oil content increases, will proceed from droplets to swirls or streaks, to patches or sheets. With increasing time, the larger surface forms generally break down into the smaller forms, i.e. sheets will cast off swirls, which further desegregate into droplets. Iridescence, i.e., a multi-color appearance of the oil film, is generally a transient phenomenon; in many cases it may only last for 15–30 seconds after the sample is introduced. It may occur immediately after the test material added (or test water in the case of effluents solids), but as the film spreads and its thickness decreases, color will degenerate into a "silvery" appearance, or areas of increased light reflectance.

8.5 Interpretation

Several interferences in detecting a sheen can occur with drilling fluids. Two of these are bubbling or foaming in the test container and particulate surface deposits. Bubbles may be formed when pipetting the test sample into the test water (especially for viscous muds) and some muds (e.g., lime muds) may foam or effervesce for a short time when added to water.

Bubbles may interfere with the ability to detect oil, leading to false negative responses. Care must be taken to carefully observe the instant that the pipet tip touches the surface of the test water and the first few seconds thereafter. However, it is also useful to wait a minute or two and recheck the test containers to determine if a sheen has developed after foaming has stopped and bubbles have broken. The appearance of a sheen must persist for at least 30 seconds before it may be scored as a positive result.

Particulate surface deposits also interfere with interpreting the sheen test results, leading to false positive results. This interference occurs when drilling fluid fines remain at the surface of the test water, normally occurring for the first 15–30 seconds, after which time they sink into the test water. Some fines do not sink, however. Generally, these can be differentiated from oil sheens because fines have a "flat" appearance whereas oil sheens have a "glossy" or more reflective appearance. Also, oil sheens tend to "disappear" when the viewing angle is changed away from the angle of reflected light. Surface patches of particulate fines, on the other hand, tend to appear as darkened patches, or shadow-like appearances regardless of the viewing angle.

Section B. Definitions

Administrator means the administrator of EPA Region 6, or an authorized representative.

Areas of Biological Concern (ABC) are locations identified by the State of Louisiana as "no activity zones" or areas determined by EPA and the State, collectively, containing significant biological resources or features that require a "No Discharge" conditions.

Average daily discharge limitation means the highest allowable average of discharges over a 24-hour period, calculated as the sum of all discharges measured divided by the number of discharges measured that day.

Average monthly discharge limitation means the highest allowable average of "daily discharges" over a calendar month, calculated as the sum of all "daily discharges" measured during a calendar month divided by the number of discharges measured that month.

Batch or bulk discharge any discharge of a discrete volume or mass of effluent from a pit, tank or similar container that occurs on a one time or infrequent or irregular basis.

Batch or bulk treatment any treatment of a discrete volume or mass of effluent from a pit, tank, or similar container prior to discharge.

Blow-out preventer control fluid is fluid used to actuate the hydraulic equipment on the blow-out preventer.

BOD5 five day biological oxygen demand.

Boiler blowdown is discharge from boilers necessary to minimize solids build-up in the boilers, includes vents from boilers and other heating systems.

Clinkers small lumps of melted plastic.

Coastal any body of water landward of the territorial seas or any wetlands adjacent to such waters.

COD chemical oxygen demand.

Completion fluids salt solutions, weighted brines, polymers and various additives used to prevent damage to the well bore during operations which prepare the drilled well for hydrocarbon production. These fluids move into the formation and return to the surface as a slug with the produced water. Drilling muds remaining in the wellbore during logging, casing and cementing operations or during temporary abandonment of the well are not considered completion fluids and are regulated by drilling fluids requirements.

Daily maximum discharge limitation means the highest allowable "daily discharge" during the calendar month.

Deck drainage is all waste resulting from platform washings, deck washings, spills, rainwater, and runoff from curbs, gutters, and drains, including drip pans and wash areas.

Desalinization unit discharge means wastewater associated with the process of creating fresh water from seawater.

Diatomaceous earth filter media means filter media used to filter seawater or other authorized completion fluids and subsequently washed from the filter.

Domestic waste is discharges from galleys, sinks, showers, safety showers, eye wash stations, hand wash stations and laundries.

Drill cuttings are particles generated by drilling into the subsurface geological formations and carried to the surface with the drilling fluid.

Drilling fluid is any fluid sent down the hole, including drilling muds and any specialty products, from the time a well is begun until final cessation of drilling in that hole.

Excess Cement Slurry the excess cement including additives and wastes from equipment washdown after a cementing operation.

Free Oil is oil that causes a sheen when discharges are released or when a static sheen test is used.

Formation test fluids are the discharge that would occur should hydrocarbons be located during exploratory drilling and tested for formation pressure and content.

Garbage means all kinds of victual, domestic and operational waste * * * generated during the normal operation of the ship and liable to be disposed of continuously or periodically * * * (*see* MARPOL 73/78 regulations).

Grab sample a single representative effluent sample taken at the recognized discharge point in as short a period of time as feasible.

Graywater means drainage from dishwater, shower, laundry, bath, and washbasin drains and does not include drainage from toilets, urinals, hospitals, and drainage from cargo areas. (*See* MARPOL 73/78 regulations.)

Inverse emulsion drilling fluids means an oil-based drilling fluid that also contains a large amount of water.

Maximum hourly rate means the greatest number of barrels of drilling fluids discharged within one hour, expressed as barrels per hour.

MGD units of flow measurement, as million gallons per day.

MPN most probable number.

Muds, cuttings, and cement at the seafloor are discharges which occur at the seafloor prior to installation of the marine riser and during marine riser disconnect and well abandonment and plugging operations.

No Activity Zones are those areas identified by MMS where no structures, drilling rigs, or pipelines will be allowed. See Areas of Biological Concern.

No Discharge Areas are areas specified by EPA where discharge of pollutants may not occur.

Packer Fluid low solids fluids between the packer, production string and well casing, (*see* workover fluids).

Priority Pollutants are those chemicals or elements identified by EPA, pursuant to section 307 of the Clean Water Act, and 40 CFR 401.15. *See* appendix A.

Sanitary waste means human body waste discharged from toilets and urinals.

Source water and sand means water from non-hydrocarbon bearing formations for the purpose of pressure maintenance or secondary recovery, including the entrained solids.

Static Sheen is the procedure described in part IV, section A.2. of the permit.

Territorial Seas is "the belt of the seas measured from the line of ordinary low water along that portion of the coast which is in direct contact with the open ocean and the line marking the seaward limit of inland waters, and extending seaward a distance of three miles" (CWA section 502).

TDS total dissolved solids.

Toxic Pollutants (see Priority Pollutants, appendix A).

Treated wastewater from dewatered drilling fluids and cuttings means wastewater from reserve pits which have been flocculated or otherwise chemically or mechanically treated to meet specific discharge conditions.

TSS total suspended solids.

Uncontaminated ballast/bilge water is seawater added or removed to maintain proper draft of a vessel.

Uncontaminated Freshwater: Freshwater which is returned to the receiving stream without the addition of any chemicals; included are (1) discharges of excess freshwater that permit the continuous operation of fire control and utility lift pumps, (2) excess freshwater from pressure maintenance and secondary recovery projects, (3) water released during the training and testing of personnel in fire protection, (4) water used to pressure test piping, and (5) once through, non-contact cooling water.

Uncontaminated Seawater is seawater which is returned to the sea without the addition of chemicals. Included are: (1) Discharges of excess seawater which permit the continuous operation of fire control and utility lift pumps, (2) excess seawater from pressure maintenance and secondary recovery projects, (3) water released during the training and testing of personnel in fire protection, (4) seawater used to pressure test piping, and (5) once through, noncontact cooling water.

Visual Sheen means a "silvery" or "metallic" sheen, gloss, or increased reflectivity; visual color; or iridescence on the water surface.

Well treatment (stimulation) fluids any fluid used to restore or improve productivity by chemically or physically altering hydrocarbon-bearing strata after a well has been drilled. These fluids move into the formation and return to the surface as a slug with the produced water. Stimulation fluids include substances such as acids, solvents and propping agents.

Workover fluids salt solutions, weighted brines, polymers and other specialty additives used in a producing well to allow safe repair and maintenance or abandonment procedures. High solids drilling fluids used during workover operations are not considered workover fluids by definition and therefore must meet drilling fluid effluent limitations before discharge may occur. Packer Fluids, low solids fluids between the packer, production string and well casing, are considered to be workover fluids and must meet only the effluent requirements imposed on workover fluids.

TABLE 1—PERMIT CONDITIONS AND DISCHARGE MONITORING FREQUENCY

Effluent characteristic	Discharge limitation	Monitoring requirements		
		Measurement frequency	Sample type/method	Recorded value(s)
(A). Drilling Fluids—no discharge.				
(B). Drill Cuttings—no discharge.				
(C). Treated Wastewater from Drilling Fluids/Cuttings, Dewatering Activities, and Pit Closure Activities.				
Free oil	No free oil	Once/day [1]	Visual sheen on receiving water [2]	Number of days sheen observed.
Oil and grease	15 mg/l	Once/day [1]	Grab	Daily maximum.
TSS	50 mg/l	Once/day [1]	Grab	Daily maximum.
COD	125 mg/l	Once/day [1]	Grab	Daily maximum.
pH	6.0–9.0 [3]	Once/day [1]	Grab	pH value.
Chlorides	500 mg/l	Once/day [1]	Grab	Daily maximum.
Total chromium	0.5 mg/l	Once/day [1]	Grab	Daily maximum.
Zinc	5.0 mg/l	Once/day [1]	Grab	Daily maximum.
Volume	Report (bbls)	Once/day [1]	Estimate	Daily total. [4]
(D). Deck Drainage.				
Free oil	No free oil	Once/day	Visual sheen on receiving water [2]	Number of days sheen observed.
Volume	Report (bbls)	Once/month	Estimate	Monthly total. [4]
(E) Formation Test Fluids.				
Free oil	No free oil	Once/discharge	Visual sheen on receiving water [2]	Number of days sheen observed.
pH	6.0–9.0 [3]	Once/discharge	Grab	pH value.
Volume	Report (bbls)	Once/discharge	Estimate	Monthly total. [4]
LDEQ field wide permits—no discharge to lakes, rivers, streams, and freshwater to intermediate wetlands.				
(F). Well Treatment, Completion, and Workover Fluids.				
Priority Pollutants	No discharge	Once/discharge	Certification [5]	
Free oil	No free oil	Once/discharge	Visual sheen on receiving water [2]	Number of days sheen observed.
pH	6.0–9.0 [3]	Once/discharge	Grab	pH value.
Volume	Report (bbls)	Once/discharge	Estimate	Monthly total.
(G). Sanitary Waste.				
Solids	No floating solids	Once/day	Observation [6]	Number of days solids observed.
BOD5	45 mg/l	Once/quarter	Grab	Daily maximum.
TSS	45 mg/l	Once/quarter	Grab	Daily maximum.
Fecal coliform	200/100 ml	Once/quarter	Grab	Daily maximum.
Flow	Report (MGD)	Once/month	Estimate	Monthly avg. [4]
(H). Domestic Waste.				
Solids	No discharge [7]			
(I). Excess Cement Slurry.				
Free oil	No free oil	Once/discharge	Visual sheen on receiving water [2]	Number of days sheen observed.

TABLE 1—PERMIT CONDITIONS AND DISCHARGE MONITORING FREQUENCY—Continued

Effluent characteristic	Discharge limitation	Monitoring requirements		
		Measurement frequency	Sample type/method	Recorded value(s)
LDEQ field wide permits—no discharge to lakes, rivers, streams, and freshwater to intermediate wetlands.				
(J). Miscellaneous Discharges: Desalinization Unit Discharge, Blowout Preventer Fluid, Uncontaminated Ballast Water, Uncontaminated Bilge Water, Mud, Cuttings, and Cement at the Seafloor, Uncontaminated Seawater, Uncontaminated Freshwater, Boiler Blowdown, Diatomaceous Earth Filter Media.				
Free oil	No free oil	Once/day [1]	Visual sheen on receiving water [2]	Number of days sheen observed.

[1] If effluent is batch treated and discharged, the monitoring requirement is once per discharge event.
[2] Discharge is possible during times other than when a visual sheen observation is possible, if the static sheen test method is used.
[3] pH at the point of discharge shall not be less than 6.0 or greater than 9.0.
[4] Information shall be recorded, but not reported unless specifically requested by EPA.
[5] No discharge except in trace amounts. Certification that the discharge does not contain priority pollutants (except in trace amounts) is required by letter to the Region. Information on the specific chemical composition shall be recorded but not reported unless requested by EPA.
[6] Monitoring by visual observation of the surface of the receiving water in the vicinity of outfall(s) shall be done during daylight at the time of maximum estimated discharge.
[7] Annex V of MARPOL 73/78 prohibits the discharge of "garbage" including food wastes, incineration ash and clinkers. Graywater, drainage from dishwater, shower, laundry, bath, and washbasins may be discharged.

Appendex A—Priority Pollutant List

Acenaphtene
Acrolein
Acrylonitrile
Benzene
Benzidine
Carbon tetrachloride (tetrachloromethane)
Chlorobenzene
1,2,4-trichlorobenzene
Hexachlorobenzene
1,2-dichloroethane
1,1,1-trichloroethane
Hexachloroethane
1,1-dichloroethane
1,1,2-trichloroethane
1,1,2,2—tetrachloroethane
Chloroethane
Bis(2-chloroethyl) ether
2-chloroethyl vinyl ether (mixed)
2-chloronaphthalene
2,4,6-trichlorophenol
Parachlorometacresol
Chloroform (trichloromethane)
2-chlorophenol
1,2-dichlorobenzene
1,3-dichlorobenzene
1,4-dichlorobenzene
3,3-dichlorobenzene
1,1-dichloroethylene
2,4-dichlorophenol
1,2-dichloropropane
1,2-dichloropropylene (1,3-dichloropropene)
2,4-dimethylphenol
2,4-dinitrotoluene
2,6-dinitrotoluene
1,2-diphenylhydrazine
Ethylbenzene
Fluoranthene
4-chlorophenyl phenyl ether
4-bromophenyl phenyl ether
Bis(2-chloroisopropyl) ether
Bis(2-chloroethyoxy) methane
Methylene chloride (dichloromethane)
Methyl chloride (dichloromethane)
Methyl bromide (bromomethane)
Bromoform (tribromomethane)
Dichlorobromomethane
Chlorodibromomethane
Hexachlorobutadiene
Hexachlorocyclopentadiene
Isophorone
Naphthalene
Nitrobenzene
2-nitrophenol
4-nitrophenol
2,4-dinitrophenol
4,6-dinitro-o-cresol
N-nitrosodimethylamine
N-nitrosodi-n-propylamine
Pentachlorophenol
Phenol
Bis(2-ethylhexyl)phthalate
Butyl benzyl phthalate
Di-n-butyl phthalate
Di-n-octyl phthalate
Diethyl Phthalate
Dimethyl phthalate 1,2-benzanthracene (benzo(a)anthracene)
Benzo(a)pyrene (3,4-benzo-pyrene)
3,4-Benzofluoranthene (benzo(b)fluoranthene)
11,12-benzofluoranthene (benzo(b)fluoranthene)
Chrysene
Acenaphtylene
Anthracene
1,12-benzoperylene(benzo(ghi)perylene)
Fluorene
Phenanthrene
1,2,5,6-dibenzanthracene (dibenzo(h)anthracene)
Indeno(1,2,3-cd)pyrene(2,3-o-phenylene pyrene)
Pyrene
Tetrachloroethylene
Toluene
Trichloroethylene
Vinyl chloride (chloroethylene)
Aldrin
Dieldrin
Chlordane(tech. mixture and metabolites)
4,4-DDT
4,4-DDE (p,p-DDX)
4,4-DDD (p,p-TDE)
Alpha-endosulfan
Beta-endosulfan
Endosulfan sulfate
Endrin
Endrin aldehyde
Heptachlor
Heptachlor epoxide (BHC-hexachlorocyclohexane)
Alpha-BHC
Beta-BHC
Gamma-BHC (lindane)
Delta-BHC (PCB-polychlorinated biphenyls)
PCB-1242 (Arochlor 1242)
PCB-1254 (Arochlor 1254)
PCB-1221 (Arochlor 1221)
PCB-1232 (Arochlor 1232)
PCB-1248 (Arochlor 1248)
PCB-1260 (Arochlor 1260)
PCB-1016 (Arochlor 1016)
Toxaphene
Antimony
Arsenic
Asbestos
Beryllium
Cadmium
Chromium
Copper
Cyanide, Total
Lead
Mercury
Nickel
Selenium
N-nitrosodiphenylamine
2,3,7,8-tetrachloro-dibenzo-p-dioxin (TCDD)
Silver Thallium Zinc

[FR Doc. 90-12211 Filed 6-6-90; 8:45 am]
BILLING CODE 6560-50-M

ENVIRONMENTAL PROTECTION AGENCY

[FRL-3784-2]

Proposed NPDES General Permit for Coastal Waters of Texas

AGENCY: Environmental Protection Agency.

ACTION: Notice of draft NPDES general permit.

SUMMARY: The Regional Administrator of Region 6 (the "Region") is today issuing a draft National Pollutant Discharge Elimination System (NPDES) general permit for discharges in the Coastal Subcategory of the Oil and Gas Extraction Point Source Category (40 CFR part 435, subpart D). This draft NPDES general permit establishes proposed effluent limitations, prohibitions, reporting requirements, and other conditions on discharges from oil and gas facilities engaged in production, field exploration, drilling, well completion, and well treatment

operations. Produced water, produced sand and source water and sand discharges are excluded from coverage under this general permit, but will, however, be regulated under a separate general coastal permit. This draft permit is being issued as a Best Professional Judgment (BPJ) determination of Best Available Technology Economically Achievable (BAT) and Best Conventional Pollutant Control Technology (BCT) levels of pollution control. This permit, when issued as final, will authorize discharges from oil and gas facilities to the coastal waters of Texas. This permit will not authorize discharges from areas defined as "Onshore" (see 40 CFR part 435, subpart C), or from "new sources" (see 40 CFR 122.2 and 40 CFR 122.29).

DATES: *Comment Period:* Comments must be received by July 23, 1990.

ADDRESSES: Comments should be sent to the Regional Administrator, Region 6, U.S. Environmental Protection Agency, 1445 Ross Avenue, Dallas, Texas 75202-2733.

FOR FURTHER INFORMATION: Contact Ms. Ellen Caldwell, Region 6, U.S. Environmental Protection Agency, 1445 Ross Avenue, Dallas, Texas 75202-2733. Telephone: (214) 655-7190.

FACT SHEET AND SUPPLEMENTAL INFORMATION:

I. Background Information

This section gives a brief overview of Federal NPDES permitting activity for Gulf of Mexico coastal waters over the last 10 years and touches upon future oil and gas guidelines development for the Coastal Subcategory.

The Draft Inland Tidal Waters Permit (in part the same geographic area as covered by this proposed coastal permit) was published on December 27, 1983 at 48 FR 57001. The draft permit was never published as final. Effluent limitations in the proposed permit were based on BPT guidelines for the Coastal Subcategory of the Oil and Gas Extraction Point Source Category (40 CFR part 435, subpart D). The BPT limitations set out in that 1983 proposed permit restricted oil and grease in produced waters to 48 mg/l monthly average and 72 mg/l daily maximum. All other discharges had a no free oil limitation. The discharge of oil based drilling fluids and drilling fluids with diesel oil added were prohibited. The discharge of halogenated phenol compounds was prohibited and the facility operator was required to minimize the discharge of dispersants, surfactants and detergents.

On November 8, 1989 (54 FR 46919), EPA published a notice requesting information to be used in the development of BAT and BCT guidelines and NSPS for all oil and gas effluent discharges in the coastal subcategory and presented a possible modification to the current definition of the coastal subcategory.

II. General Permit Coverage

In compliance with the provisions of the Federal Water Pollution Control Act, as amended (33 U.S.C. 1251 *et seq:* the Clean Water Act, or the "Act"), operators of lease blocks covered by the Coastal Subcategory of the Oil and Gas Extraction Point Source Category, located in the coastal and inland waters of Texas will be authorized to discharge to the receiving waters covered by this permit in accordance with effluent limitations, monitoring requirements, and other conditions set forth in the final general permit.

Operators of lease blocks within the general permit area will be required to make a written notification to the Regional Administrator within 45 days of the effective date of this permit that they intend to be covered by the general permit (*See* permit Part I.A.1). Unless otherwise notified in writing by the Regional Administrator after submission of the notification, owners or operators requesting coverage will be authorized to discharge under the general permit (*See* permit, Part I.A.). Operators of lease blocks within the general permit area who fail to notify the Regional Administrator of their intent to be covered by the general permit will not be authorized under the general permit to discharge from those facilities to the receiving waters named.

This permit does not authorize discharges from "new sources" as defined at 40 CFR 122.2.

III. Geographic Coverage

This proposed general permit covers oil and gas extraction facilities in the State of Texas that are engaged in production, field exploration, drilling, well completion and well treatment operations in areas defined as "coastal". The geographic scope of the proposed permit implements EPA's regulatory definition of "coastal". As a result of a decision of the U.S. Court of Appeals for the Fifth Circuit, the proposed permit also covers an area between the Chapman line and the inner boundary of the territorial seas. Both the regulatory definition and the area included as a result of the Fifth Circuit decision are explained below.

EPA's regulations define "coastal" as "(1) any body of water landward of the territorial seas as defined in 40 CFR 125.1(gg) or (2) any wetlands adjacent to such waters." 40 CFR 435.41(e). The term wetlands is defined as "those surface areas which are inundated or saturated by surface or groundwater at a frequency and duration sufficient to support, and that under normal circumstances do support, a prevalence of vegetation typically adapted for life in saturated soil conditions. Wetlands generally include swamps, marshes, bogs, and similar areas." 40 CFR 435.41(f). The coastal permit area as described in the regulations is broad by definition. It includes, for example, certain bays and all inland rivers, streams and lakes and adjacent wetlands.

The inner boundary of the area of the proposed permit cannot be delineated as a single line because, under the forgoing definition, facilities located over any body of water landward of the territorial seas and adjacent wetlands are considered to be coastal.

The outer boundary of the proposed permit area, as defined at 40 CFR 435.41(e), is the inner boundary of the territorial seas. Although 40 CFR 435.41(e) refers to 40 CFR 125.1(gg) for a definition of the territorial seas, the latter provision has been deleted from the regulations. However, 40 CFR 125.1(gg) merely repeated section 502(8) of the Clean Water Act, which defines the territorial seas as "the belt of seas measured from the line of ordinary low water along that portion of the coast which is in direct contact with the open sea and the line marking the seaward limit of inland waters, and extending seaward a distance of three miles." 40 CFR 125.1(gg) (July 1, 1978). That statutory definition is still in effect.

Current National Oceanic and Atmospheric Administration (NOAA) nautical charts can be of assistance in locating the outer boundary of the proposed general permit area. These charts cover the entire coasts of Texas and Louisiana at a 1:80,000 scale, although certain ports and bays have more detailed coverage. They are available from NOAA Charts Agents, such as marinas and marine supply stores.

As is noted above, the geographic scope of the proposed permit also includes the area between the Chapman line and the inner boundary of the territorial seas as a result of a decision of the U.S. Court of Appeals for the Fifth Circuit. The Chapman line is formed by a series of 40 latitude and longitude coordinates that roughly parallel the Louisiana and Texas coastline to the Mexican border. EPA's regulations formerly defined "coastal" to include all land and water areas landward from the inner boundary of the territorial seas

and eastward of the point defined by 89 degrees 45 minutes W. Longitude and 29 degrees 46 minutes N. Latitude and continuing west of that point through a series of longitude and latitude coordinates (the Chapman Line) to the point 97 degrees 19 minutes W. Longitude and continuing southward to the U.S.-Mexican border. So defined, the coastal area included areas on the Gulf coast of Texas and Louisiana and other areas. Interim Final Rulemaking, 41 FR 44942–44946 (Oct. 13, 1976). The 1976 boundaries were set to include wells located both in water and on land within the geographic area defined as coastal (at that time most of the facilities were believed to have been located in marshes, bays and estuaries)

On April 13, 1979 (44 FR 22069), the Agency redefined the coastal subcategory as set forth at 40 CFR 435.41(e). Under the new definition, certain wells on land were reclassified into the onshore subcategory and others were reclassified as stripper wells, depending on their rate of production. The wells that were reclassified as onshore were required to attain zero discharge. Industry challenged EPA's 1979 final rule. In *American Petroleum Institute* v *EPA*, 661 F. 2d 340, 354–57 (5th Cir. 1981), the Court held that the Agency had failed to adequately consider the cost to the reclassified wells and to any wells that came into existence in the affected area after the issuance of the 1979 redefinition. Oil and Gas Extraction Point Source Category; Suspension of Regulations, 47 FR 31554 (July 21, 1982). The wells affected by the suspension are treated as coastal in this proposed permit.

A facility is considered to be covered under the proposed general permit if the location of the wellhead is within the described permit area. It is the responsibility of the operator to determine if its facility is covered by this permit.

IV. Types of Discharges Covered

The following discharges, as defined below, will be covered under this general permit.

Blow-Out Preventer Control Fluid: Fluid used to actuate the hydraulic equipment on the blow-out preventer.

Boiler Blowdown: Discharges from boilers necessary to minimize solids build-up in the boilers, including vents from boilers and other heating systems.

Completion Fluids: Salt solutions, weighted brines, polymers and various additives used to prevent damage to the wellbore during operations which prepare the drilled well for hydrocarbon production. These fluids move into the formation and return to the surface as a slug with the produced water. Drilling muds remaining in the wellbore during logging, casing and cementing operations or during temporary abandonment of the well are not considered completion fluids and are regulated by drilling fluids requirements.

Deck Drainage: All waste resulting from platform washings, deck washings, spills, rainwater, and runoff from curbs, gutters, and drains, including drip pans and wash areas.

Desalinization Unit Discharge: Wastewater associated with the process of creating fresh water from seawater.

Diatomaceous Earth Filter Media: Filter media used to filter seawater or other authorized completion fluids and subsequently washed from the filter unit.

Domestic Waste: Discharges from galleys, sinks, showers, safety showers, eye wash stations and laundries.

Drill Cuttings: Particles generated by drilling into the subsurface geological formations and carried to the surface with the drilling fluid.

Drilling Fluid: Any fluid sent down the hole, including drilling muds and any specialty products, from the time a well is begun until final cessation of drilling in that hole.

Excess Cement Slurry: The excess cement including additives and wastes from equipment washdown after a cementing operation.

Formation Test Fluid: The discharge that would occur should hydrocarbons be located during exploratory drilling and tested for formation pressure and content.

Muds, Cuttings, and Cement at the Seafloor: Discharges that occur at the seafloor prior to installation of the marine riser and during marine riser disconnect, well abandonment and plugging operations.

Produced Sands: Will be covered in a subsequent coastal waters production permit.

Produced Waters: Will be covered in a subsequent coastal waters production permit.

Sanitary Waste: Human body waste discharged from toilets and urinals.

Source Water and Sand: Will be covered in a subsequent coastal waters production permit.

Treated Wastewater from Dewatered Drilling Fluids and Cuttings: Means wastewater from reserve pits which have been flocculated or otherwise chemically or mechanically treated to meet specific discharge limitations.

Uncontaminated Ballast/Bilge Water: Seawater added or removed to maintain proper draft of a vessel.

Uncontaminated Seawater: Seawater which is returned to the sea without the addition of any chemicals; included are (1) discharges of excess seawater that permit the continuous operation of fire control and utility lift pumps, (2) excess seawater from pressure maintenance and secondary recovery projects, (3) water released during the training and testing of personnel in fire protection, (4) sea-water used to pressure test piping, and (5) once through, noncontact cooling water.

Uncontaminated Freshwater: Freshwater which is returned to the receiving stream without the addition of any chemicals; included are (1) discharges of excess freshwater that permit the continuous operation of fire control and utility lift pumps, (2) excess freshwater from pressure maintenance and secondary recovery projects, (3) water released during the training and testing of personnel in fire protection, (4) water used to pressure test piping, and (5) once through, noncontact cooling water.

Well Treatment (stimulation) Fluids: Any fluid used to restore or improve productivity by chemically or physically altering hydrocarbon-bearing strata after a well has been drilled. These fluids move into the formation and return to the surface as a slug with the produced water. Stimulation fluids include substances such as acids, solvents and propping agents.

Workover Fluids; Salt solutions, weighted brines, polymers and other specialty additives used in a producing well to allow safe repair and maintenance or abandonment procedures. High solids drilling fluids used during workover operations are not considered workover fluids by definition and therefore must meet drillling fluid effluent limitations before discharge may occur. Packer fluids, low solids fluids between the packer, production string and well casing, are considered to be workover fluids and must meet only the effluent requirements imposed on workover fluids.

V. Statutory Basis

The Act, at Section 402, sets forth the NPDES program to carry out its objective of reducing and eliminating the discharge of pollutants to surface waters of the U.S. The Water Quality Act amendments of 1987 has extended the original BAT/BCT/NSPS compliance deadline of July 1, 1984 to no later than March 31, 1989 for existing dischargers.

A. Permit Coverage

Under the NPDES permit program, every point source must have a valid permit before discharge may occur. A point source is defined as:

Any discernible, confined,and discrete conveyance, including but not limited to, any pipe, ditch, channel, tunnel, conduit, well, discrete fissure, container, rolling stock, concentrated animal feeding operation, landfill leachate collection system, vessel or other floating craft from which pollutants are or may be discharged. (40 CFR 122.2)

Permits may be issued individually or as general permits that cover categories of dischargers where, among other things, operations are the same or are substantially similar and the types of wastes discharged are the same (40 CFR 122.28). Any discharger falling under the Coastal Subcategory of the Oil and Gas Extraction Point Source Category (40 CFR part 435, subpart D) must notify the Regional Administrator for coverage and comply with the general permit or apply for an individual permit.

B. Clean Water Act Provisions

Sections 301(b), 304, 308, 401, 402, and 403 of the Act provide the basis for the conditions included in NPDES permits. For this coastal waters permit, the conditions fall into four categories: technology-based effluent limitations, limitations based on state water quality standards, best management practices, and monitoring and recordkeeping requirements.

1. Technology-based Effluent Limitations

Technology-based effluent limitations are categorized by the industrial category, the pollutants covered, and the treatment level required. For existing sources, these limitations require that more effective control technologies be accomplished over time. For new sources, the most stringent limitations are immediately effective. The first level of effluent limitations for existing sources is based on the Best Practicable Control Technology Currently Available (BPT). This technology represents the average of the best existing waste treatment performance by plants of various sizes, ages and unit processes within the industry or subcategory. BPT guidelines for the Offshore Subcategory of the Oil and Gas Extraction Point Source Category were promulgated on April 13, 1979. (40 CFR part 435, subpart A; 44 FR 22069). These guidelines require "no discharge of free oil" for discharges of drilling muds and cuttings. This limitation is monitored by a visual inspection of the receiving water for evidence of a sheen. Interim Final BPT effluent limitations for the Coastal Subcategory were promulgated by EPA on October 13, 1976 (40 CFR part 435, subpart D; 41 FR 44942). The BPT limits established include: limitations on the discharge of oil and grease in produced water of 72 mg/l as a daily maximum and 48 mg/l as a 30 day average; a prohibition on the discharge of free oil in deck drainage, drilling fluids, drill cuttings, and well treatment fluids; a minimum residual chlorine content of 1 mg/l in sanitary discharges must be maintained; and a prohibition on the discharge of floating solids in sanitary wastes and domestic wastes.

The second level of technology-based effluent limitations is based on the Best Available Technology Economically Achievable (BAT) and Best Conventional Pollutant Control Technology (BCT). BAT limitations, in general, represent the best existing performance of technology in the industrial category or subcategory. BAT limitations control listed toxic and nonconventional pollutants (40 CFR 401.15; see Permit Appendix A for listing). BCT limitations control the conventional pollutants listed at 40 CFR 401.16 (pH, BOD, oil and grease, TSS, and fecal coliform) from existing industrial point sources BAT and BCT may never be less stringent than BPT.

Guidelines for BAT and BCT effluent limitations, as well as New Source Performance Standards (NSPS) were proposed for the offshore subcategory of the oil and gas extraction category in August, 1985. The Agency intends to publish final guidelines covering the offshore subcategory in 1992. On November 8, 1989 (54 FR 46919), EPA published a notice requesting comments regarding various issues on the possible development of BAT, BCT and new source performance standards (NSPS) relating to discharges in the coastal subcategory, including a redefinition of the subcategory. Final promulgated guidelines for the coastal subcategory is not expected until 1995. Therefore, any permit actions by the Region must be based on the Agency's Best Professional Judgment (BPJ) of what BAT or BCT limitations may be (40 CFR 122.44).

2. State of Texas Standards and Limitations

All discharges to state waters must comply with state water quality standards and Railroad Commission of Texas pollution control rules for oil and gas operations. Discharges to state waters must also comply with any other limitations that may be imposed by the State as part of its certification of NPDES permits under section 401 of the Act (see below, part VI.A.).

3. Best Management Practices

To carry out the purposes and intent of the Act, Best Management Practices (BMPs) are defined at 40 CFR 122.44(k). Permit conditions can be based on BMPs to control toxic pollutants and hazardous substances under section 304(e) when numeric effluent limitations are infeasible, or when the practices are reasonably necessary to achieve limitations and standards set forth by the Act.

4. Monitoring and Recordkeeping

Section 308 of the Act specifies that to assist in developing effluent limitations and standards and in determining violations of any permit conditions, permits must require that operators monitor and record discharge information. This section of the Act requires owners or operators to maintain records, to supply reports, to install, use, and maintain monitoring equipment, to sample effluents according to prescribed methods, and to allow the Regional Administrator access to the facilities or records.

VI. Other Legal Requirements

A. State Certification

Under section 401(a)(1) of the Act, EPA may not issue a NPDES permit until the State in which the discharge will originate grants or waives certification to ensure compliance with appropriate requirements of the Act and State law. Section 301(b)(1)(c) of the Act requires that NPDES permits contain conditions that ensure compliance with applicable state water quality standards or limitations.

B. Oil Spill Requirements

Section 311 of the Act prohibits the discharge of oil and hazardous materials in harmful quantities. In the 1978 amendments to section 311, Congress clarified the relationship between this section and discharges permitted under section 402 of the Act. It was the intent of Congress that routine discharges permitted under section 402 be excluded from section 311. Discharges permitted under section 402 are not subject to section 311 if they are:

(1) In compliance with a permit under section 402 of the Act;

(2) Resulting from circumstances identified, reviewed and made part of the public record with respect to a permit issued or modified under section 402 of the Act, and subject to a condition in such permit; or,

(3) Continuous or anticipated intermittent discharges from a point source, identified in a permit or permit application under section 402 of the Act that are caused by events occurring within the scope of the relevant operating or treatment system.

To help clarify the relationship between a spill, regulated under section

311, and a discharge regulated under a section 402 permit, the following list of spills was developed by EPA and has been included in all previous Gulf of Mexico oil and gas discharge permits as guidance (Note: this list is not all-inclusive):

(1) Discharges from a platform or structure on which oil or water treatment equipment is not mounted;
(2) Discharges from burst or ruptured pipelines, manifolds, pressure vessels or atmospheric tanks;
(3) Discharges from uncontrolled wells;
(4) Discharges from pumps or engines;
(5) Discharges from oil gauging or measuring equipment;
(6) Discharges from pipeline scraper, launching, and receiving equipment;
(7) Spills of diesel fuel during transfer operations;
(8) Discharges from faulty drip pans;
(9) Discharges from well heads and associated valves;
(10) Discharges from gas-liquid separators; and
(11) Discharges from flare lines.

C. The Endangered Species Act

The Endangered Species Act (ESA) and its implementing regulations (50 CFR part 402) require that each Federal Agency shall ensure that any agency action, such as permit issuance, is not likely to jeopardize the continued existence of any endangered or threatened species or result in the destruction or adverse modification of their critical habitats.

The discharges from exploration and development activities that could potentially cause the greatest impact to endangered or threatened species are drilling fluids and drill cuttings. Under the proposed permit, these discharges are prohibited and therefore, will cause no impact. Discharges that are permitted include treated wastewater, deck drainage, formation test fluids (prohibited to freshwater), treatment, completion and workover fluids (prohibited to freshwater), sanitary waste, domestic waste and several miscellaneous discharges. These discharges must meet applicable technology based limitations and limitations designed to assure compliance with standards for the protection of water quality.

Thus, based on the terms, conditions, and limitations of this permit, EPA has concluded in its biological assessment that the discharges authorized by this general permit are not likely to adversely affect any endangered or threatened species nor adversely affect their critical habitat. EPA will provide copies of the draft permit, fact sheet, and biological assessment to the U.S. Fish and Wildlife Service and the National Marine Fisheries Service prior to issuing the permit, requesting comment on this conclusion.

D. The Coastal Zone Management Act

The Coastal Zone Management Act (CZMA) and its implementing regulations (15 CFR part 930, subpart D) require that any Federally licensed or permitted activity affecting the coastal zone of a State with an approved Coastal Zone Management Program (CZMP) be consistent with the CZMP (section 307(c)(3)(A)). The State of Texas does not have an approved CZMP Consistency certification, therefore, is not necessary

E. The Marine Protection, Research and Sanctuaries Act

The Marine Protection, Research and Sanctuaries Act (MPRSA) of 1972 regulates the dumping of all types of materials into ocean waters and establishes a permit program for ocean dumping. In addition the MPRSA establishes the Marine Sanctuaries Program, implemented by NOAA, which requires NOAA to designate ocean waters as marine sanctuaries for the purpose of preserving or restoring their conservation, recreational, ecological or aesthetic values.

Section 302(i) of MPRSA requires that the Secretary of Commerce, after designation of a marine sanctuary, consult with other Federal agencies, and issue necessary regulations to control any activities permitted within the boundaries of the marine sanctuary. It also provides that no permit, license, or other authorization issued pursuant to any other authority shall be valid unless the Secretary shall certify that the permitted activity is consistent with the purpose of the marine sanctuaries program and/or can be carried out within its promulgated regulations. There are presently no existing marine sanctuaries in the coastal waters of Texas.

F. Economic Impact (Executive Order 12291)

The Office of Management and Budget has exempted this action from the review requirements of Executive Order 12291 pursuant to section 8(b) of that order.

G. The Paperwork Reduction Act

The information collection required by this permit has been approved by the Office of Water Management and Budget (OMB) under the provisions of the Paperwork Reduction Act, 44 U.S.C. 3501 *et seq.*, in submissions made for the NPDES permit program and assigned OMB control numbers 2040-0086 (NPDES permit application) and 2040-0004 (discharge monitoring reports).

All facilities affected by this permit will need to submit a request for coverage under the Texas Coastal Waters general permit. EPA estimates that it will take an affected facility three hours to prepare the request for coverage. All affected facilities will be required to submit discharge monitoring reports (DMRs). EPA estimates the DMR burden to be 36 hours per facility per year.

The public is invited to send comments regarding this burden estimate for any other aspect of this collection of information, including suggestions for reducing this burden, to Chief, Information Policy Branch, PM-223, U.S. Environmental Protection Agency, 401 M Street SW., Washington, DC 20460; and the Office of Water Management and Budget, Paperwork Reduction Project (2040-0086 and 2040-0004), Washington, DC 20503, marked "Attention: Desk Officer for EPA".

H. The Regulatory Flexibility Act

After review of the facts presented in this document, I hereby certify, pursuant to the provisions of 5 U.S.C. 605(b), that this general permit will not have a significant impact on a substantial number of small entities. This certification is based on the fact that the majority of parties regulated by this permit have greater than 500 employees and are not classified as small businesses under the Small Business Administration regulations established at 49 FR 5024 *et seq.*, (February 9, 1984). These facilities are classified as Major Group 13—Oil and Gas Extraction SIC 1311 Crude Petroleum and Natural Gas. For those operators having fewer than 500 employees this permit will not have significant economic impact. Effluent limitations being imposed in this permit are similar to those being drafted in state discharge permits. Moreover, the permit reduces a significant administrative burden of applying for individual permits, on regulated sources.

Robert E. Layton Jr., P.E.,
Regional Administrator, Region 6.

VII. Specific Permit Conditions

Appropriate conditions for each discharge were determined through consideration of: (A) Technology-based effluent limitations to control conventional pollutants under BCT (BPJ); (B) technology-based effluent limitations to control toxic and nonconventional pollutants under BAT (BPJ); (C) Texas State Water Quality Standards; (D) Best Management Practices; (E) monitoring and record-

keeping requirements; and (F) miscellaneous requirements.

Discussions of the specific effluent limitations and monitoring requirements, derived from the above considerations, appear below in parts A through F. This factsheet discusses all potential effluent limits for each waste stream, however, the permit only contains the most stringent limitations. Permit conditions are organized first, in the text by their statutory authority and second by the type of discharge. For convenience, these requirements and their regulatory basis are cross-referenced by the type of discharge in Table 1.

Detailed discussions of the information base and the Agency's decisionmaking process is presented in the Administrative Records of the BAT/BCT (BPJ) Federal waters permit for the Gulf of Mexico and the BAT/BCT/NSPS effluent guideline rulemaking. Consequently, discussions on BAT, BCT, and BMP limitations are presented briefly in this fact sheet where they are the same as those found in the OCS general permit GMG280000. New permit-specific BAT and BCT considerations for this proposed Coastal permit will be discussed in detail where effluent limitations were not considered previously or are different from those found in the OCS general permit. The reader is referred to the **Federal Register** notifications for the proposed and final permits and proposed effluent guidelines for these detailed discussions (see part I., above). The information base and rationale for the permit-specific conditions resulting from consideration of state water quality standards are also new, and therefore, presented in detail in this fact sheet.

A. Best Conventional Pollutant Control Technology (BCT) Conditions

BCT (BPJ) conditions include both prohibitions and limitations on conventional pollutants. BCT parameters that are regulated in this permit include oil and grease (also regulated as "free oil"), solids, pH, and fecal coliform.

For wastestreams for which no effluent guidelines exist, the Region is establishing BPT effluent limitations on a best professional judgment basis. In doing so, the Region has considered all statutory requirements of section 304(b)(1) (a) and (b) of the Clean Water Act. These considerations included the total cost of the application, the age of the equipment and facility, the process employed, the engineering aspects of the application of various types of control techniques, process changes, non-water quality environmental impacts and such other factors as are appropriate.

1. Drilling Fluids

a. Prohibitions. Discharge of oil-based drilling fluids and inverse emulsion drilling fluids is prohibited. This prohibition is based on the Agency's determination that such discharges cannot comply with the free oil limitation required below. This is a condition of the OCS BAT/BCT general permit.

b. Limitations—Free Oil. The BCT limitation on free oil is the same as the BPT limitation: none shall be detected, using the visual sheen on the surface of the receiving water method. The monitoring frequency is once per day, when discharging. For water-based drilling fluids to which any oil has been added, discharge is limited to those times that visual sheen observation is possible. The number of days a sheen is observed must be recorded.

[Exception] Discharge of water-based muds to which oil has been added is not restricted only to periods when observation is possible if the operator uses the static sheen test method for detecting free oil.

The Region is proposing to establish this permit's BCT limitation for drilling fluids to be equal to BPT because the Region does not have technology performance data available at this time on which to base a more stringent limitation. As this limitation is equal to the BPT level of control, there is no incremental cost involved.

2. Drill Cuttings

[Special Note.] The permit prohibitions and limitations that apply to drilling fluids also apply to fluids that adhere to drill cuttings. Any permit condition that applies to the drilling fluid system, therefore, also applies to cuttings discharges. Monitoring requirements, however, are not the same.

a. Prohibitions. Discharge of cuttings derived from oil-based and inverse emulsion drilling fluids is prohibited. This prohibition is based on the Agency's determination that such discharges cannot comply with the free oil limitation required below. This is a condition in the OCS BAT/BCT general permit.

b. Limitations—Free Oil. The BCT limitation for free oil from cuttings is the same as that for drilling fluids: there shall be no free oil detected by use of the visual sheen on the surface of the receiving water method. Operators are cautioned that this limitation applies not only at the time of discharge, but at any time subsequent to discharge. Operators can be, and have been, held liable for permit violations resulting from cuttings piles from which oil has seeped even after the operator has left the site. The monitoring frequency is once per day, when discharging. If oil has been added to the mud system for any reason, discharge is only authorized during times when a visual sheen observation is possible.

[Exception] Discharge of cuttings from a mud system to which oil has been added is not restricted only to those periods when a visual observation is possible if the operator uses the static sheen test method for detecting free oil.

The Region is establishing this permit's BCT limitation for cuttings to be equal to BPT because the Region does not have technology performance data available at this time on which to base a more stringent limitation. As this limitation is equal to the BPT level of control, there is no incremental cost involved.

3. Produced Water

Produced water discharges to the coastal waters of Texas are not covered by this permit action. This waste stream will, however, be covered under a separate permit for oil and gas production related activities.

4. Produced Sand

Produced sand discharges to the coastal waters of Texas are not covered by this permit action. This waste stream will, however, be covered under a separate permit for oil and gas production related activities.

5. Treated Wastewater From Drilling Fluids and Cuttings Dewatering Activities, and Pit Closure Activities

a. Limitations—Oil and Grease. Treated wastewater must meet a daily maximum limitation of 15 mg/l prior to discharge. Samples must be collected as a grab and analyzed once per day. If the effluent is batch treated and discharged, then the monitoring is once per discharge event.

Total Suspended Solids. Treated wastewater shall not exceed 50 mg/l TSS, as a daily maximum. A grab sample must be collected and analyzed once per day. If the effluent is batch treated and discharged, then the monitoring is once per discharge event.

pH. Discharges of treated wastewater must meet a daily pH limitation of not less than 6.0 and not greater than 9.0 at the point of discharge. Samples must be collected as a grab and analyzed once per day. If the effluent is batch treated and discharged, then the monitoring is once per discharge event.

Note: Dilution of the reserve pit effluent or the use of dispersants or surfactants to meet any of the above standards is prohibited.

It is this Region's best professional judgment that the above limitations for oil and grease, total suspended solids and pH appropriately reflect a BPT level of control and are based on current pit dewatering technology (chemical flocculation and mechanical treatment). No technology performance data available to the Region indicate that more stringent limits are appropriate at this time. Therefore, the Region is setting BCT effluent limitations equal to BPT. Because these same effluent limitations are required by the State of Texas prior to discharging treated wastewater from reserve pit dewatering activities, there is no incremental cost to the operator to achieve BCT.

6. Formation Test Fluids

a. Limitations—Free Oil. The limitation of free oil is that a sheen shall not be detected on the surface of the receiving water. Monitoring must be accomplished once per day, when discharging during conditions when an observation of a sheen is possible. The number of days a sheen is detected must be recorded.

[Exception] Discharge may not be restricted to only at times when observation of a sheen is possible if the operator uses the static sheen test method for detecting free oil.

The Region has determined that the BPT effluent limitation guideline of no discharge of free oil from deck drainage, drilling muds, drill cuttings, well treatment, workover, and completion fluids and other miscellaneous discharges should also apply to formation test fluids. The no free oil limitation for formation test fluids can be achieved through the use of oil-water separator technology or discharge of the effluent through an oil-water sump pile. No technology performance data available to the Region indicate that a more stringent limit is appropriate at this time. Thus, the Region has established BCT equal to BPT level of control for this waste stream. In addition, the State of Texas prohibits the discharge of hydrocarbons (interpreted as free oil) in its Statewide Rule 8(e)2(b) into waters of the State, therefore, there is no incremental cost to achieve BCT.

pH. Formation test fluids must meet the BCT effluent limitation where the pH shall not be less than 6.0 and greater than 9.0 prior to discharge. Once per discharge, a grab sample must be collected and analyzed.

The pH of discharged formation test fluids may have a substantially different pH from that of ambient receiving water due to various well stimulation operations such as acidizing. The purpose of this limitation is to prevent the discharge of formation test fluids into shallow water areas where there is potential of increasing the background pH. The technology employed to maintain the pH of formation test fluids within the range of 6.0 to 9.0 is simple chemical buffering of the effluent in a catch tank prior to discharging or passage through the water treatment equipment. It is this Region's best professional judgment that the above limitation appropriately reflects a BPT level of control. No technology performance data available to the Region indicate that a more stringent standard is appropriate at this time. Therefore, the Region is setting a BCT effluent limitation for the pH of test fluids to equal that of BPT. Operators routinely buffer fluids passing through their oil water separator equipment to avoid equipment corrosion and upset conditions, thus, the above limitation for pH does not reflect any incremental cost.

7. Well Treatment Fluids, Completion Fluids, and Workover Fluids

a. Limitations—Free Oil. The BCT limitation on free oil is the same as the BPT limitation: a visual sheen shall not be detected on the surface of the receiving water. Monitoring must be accomplished once per day when discharging, during conditions when an observation of a sheen is possible. The number of days a sheen is observed must be recorded.

[Exception] Discharge may not be restricted only to periods when observation of a sheen is possible if the operator uses the static sheen test method for detecting free oil.

The Region is establishing this permit's BCT limitation for free oil to be equal to BPT because the Region does not have technology performance data available at this time on which to base a more stringent limitation. In addition, the State of Texas prohibits the discharge of hydrocarbons (interpreted as free oil) in its Statewide Rule 8(e)2(b) into waters of the State, therefore, there is no incremental cost to achieve BCT.

pH. Well treatment, completion and workover fluids must meet the BCT requirement for pH of not less than 6.0 and not greater than 9.0, at the point of discharge. Once per discharge, a grab sample must be taken and analyzed.

The pH of discharged well treatment, completion and workover fluids may have a substantially different pH from that of ambient receiving water due to various well stimulation operations such as acidizing. The purpose of this limitation is to prevent the discharge of well treatment, completion and workover fluids into shallow water areas where there is potential of increasing the background pH. The technology employed to maintain the pH of well treatment, completion and workover fluids within the range of 6.0 to 9.0 is simple chemical buffering of the effluent in a catch tank prior to discharging or passage through the water treatment equipment. It is this Region's best professional judgment that the above limitation appropriately reflects a BPT level of control. No technology performance data available to the Region indicate that a more stringent standard is appropriate at this time. Therefore, the Region is setting a BCT effluent limitation for the pH of well treatment, completion and workover fluids to equal that of BPT. Operators routinely buffer fluids passing through their oil water separator equipment to avoid equipment corrosion and upset conditions, thus, the above limitation for pH does not reflect any incremental cost.

8. Deck Drainage

a. Limitations—Free Oil. The BCT limitation on the discharge of free oil is the same as the BPT limitation: a visual sheen shall not be detected on the surface of the receiving water. As this limitation is equal to the BPT level of control, there is no incremental cost involved. No technology performance data available to the Region indicate that a more stringent standard is appropriate at this time. Monitoring shall be accomplished once a day, when discharging, during conditions when a sheen could be observed. The number of days a sheen is observed must be recorded.

[Exception] Discharge may not be restricted only to periods when a visual observation is possible if the operator uses the static sheen test method for detecting free oil.

9. Sanitary Waste

a. Prohibitions—Solids. No floating solids may be discharged to the receiving waters. An observation must be made once per day during daylight in the vicinity of sanitary waste outfalls following either the morning or midday meals and at a time during maximum estimated discharge. The number of days solids are observed must be recorded.

The Region is establishing this permit's BCT limitation for floating solids equal to BPT because the Region does not have technology performance

data available at this time on which to base a more stringent limitation. As this limitation is equal to the BPT level of control, there is no incremental cost involved.

b. Limitations—Biological Oxygen Demand (BOD5). It is this Region's best professional judgment that the BCT requirement for BOD in sanitary waste is 45 mg/l as a daily maximum. A grab sample must be collected and analyzed once per quarter. Data from manufacturers of offshore sanitation systems (those currently in use on most offshore and coastal platforms and rigs) show that when these units are properly operated and maintained can under optimum conditions meet 20–30 mg/l, and under normal use meet the proposed permit limitation of 45 mg/l. Most rigs and platforms in the Gulf of Mexico and state coastal waters already operate Type II—Marine Sanitation Devices which can meet the above limitation, thus, there is no incremental cost associated with this limitation.

Total Suspended Solids. Sanitary waste discharges shall meet a 45 mg/l daily maximum BCT discharge limitation for total suspended solids. A grab sample shall be collected and analyzed once per quarter. Data from manufacturers of offshore sanitation systems (those currently in use on most offshore and coastal platforms, rigs, and barges) show that when these units are properly operated and maintained can, under optimum conditions meet 20–30 mg/l and under normal use, meet the proposed permit limitation of 45 mg/l. Most rigs and platforms in the Gulf of Mexico and state coastal waters already operate Type II—Marine Sanitation Devices which can meet the above limitation, thus, there is no incremental cost associated with this limitation.

Fecal Coliform. Sanitary waste discharges must meet a maximum limitation of 200/100 ml for fecal coliform bacteria. A grab sample must be collected and analyzed once per quarter. In previous permits residual chlorine has been used as a surrogate parameter for fecal coliform. The BCT limitation of 200/100 ml in this proposed permit, based on the Region's best professional judgment, is equivalent to the BPT limitation of a minimum of 1 mg/l residual chlorine (maintained as close as to this concentration as possible). Because the proposed BCT effluent limitation is equivalent to the BPT level of control, there is no incremental cost. Data from manufacturers of offshore sanitation systems (those currently in use on most offshore and coastal platforms and rigs) show that when these units are properly operated and maintained can, under normal operations meet the permit limitations of 200/100 ml.

10. Domestic Waste

a. Prohibition— Solids. No floating solids may be discharged to the receiving waters. An observation must be made once per day during daylight in the vicinity of domestic waste outfalls at times during maximum estimated discharge. The number of days solids are observed must be recorded.

The Region is proposing this permit's BCT limitation to be equal to BPT because the Region does not have technology performance data available at this time on which to base a more stringent limitation. As this limitation is equal to the BPT level of control, there is no incremental cost involved.

11. Miscellaneous Discharges

Desalination Unit Discharge
Blowout Preventor Fluid
Uncontaminated Ballast Water
Uncontaminated Bilge Water
Mud, Cuttings, and Cement at the Seafloor
Uncontaminated Seawater
Uncontaminated Freshwater
Boiler Blowdown
Excess Cement Slurry
Diatomaceous Earth Filter Media

a. Limitations—Free Oil. The limitation for all of these discharges of no free oil is that none shall be detected using the visual sheen on the surface of the receiving water method. Monitoring must be accomplished during periods when a sheen can be detected. The number of days a sheen is observed must be recorded.

[Exception] Discharges may not be restricted only to periods when observation of a sheen is possible if the operator uses the static sheen method for detecting free oil.

This Region has determined that the BPT effluent limitation guideline of no discharge of free oil from the discharge of deck drainage, drilling muds, drill cuttings, and well treatment fluids should also apply to the above miscellaneous discharges. Thus, the no free oil limitation is the Regions best professional judgment determination of BPT controls for these discharges. No technology performance data available to the Region indicate that a more stringent standard is appropriate at this time. For this permit, the Region has proposed BCT effluent limitations equal to the BPT level of control. The above BCT effluent limitations for miscellaneous discharges are the same as those established in the OCS BAT/BCT general permit. The State of Texas prohibits the discharge of hydrocarbons (interpreted as free oil) in its Statewide Rule 8(e)2(b) into waters of the State, therefore, there is no incremental cost to achieve BCT.

12. Miscellaneous BCT Prohibitions or Limitations

a. Limitations—Floating Solids or Visible Foam. There shall be no discharge of floating solids or visible foam, from any source, in other than trace amounts. This is a condition of the OCS BAT/BCT general permit.

The BCT prohibition on floating solids is equal to the BPT level of control for sanitary and domestic wastes. The Region has determined that the BPT effluent limitations guideline of no discharge of floating solids from sanitary wastes and domestics wastes should apply to all other discharges as well. Thus, the no floating solids limitation is the Region's best professional judgment determination of BPT limitations for these discharges. Therefore the no floating solids discharge limitation for these discharges is equal to the BPT level of control. As such, the extension of this limitation to all discharges will involve no incremental cost.

B. Best Available Technology Economically Achievable (BAT) Conditions

BAT conditions include both prohibitions and limitations on toxic and nonconventional pollutants. BAT (BPJ) effluent limitations proposed for drilling muds and drill cuttings would prohibit their discharge. The legal, technical and economic basis for this determination will be discussed below in detail (*See* Derivation of Permit Conditions based on EPA's Best Professional Judgment of BAT for Drilling Fluids and Cuttings Discharges).

1. Drilling Fluids

a. Prohibitions. There shall be no discharge of drilling fluids.

2. Drill Cuttings

Special Note: The permit prohibitions and limitations that apply to drilling fluids also apply to fluids that adhere to drill cuttings. Any permit condition that may apply to the drilling fluid system, therefore, also applies to cuttings discharges.

a. Prohibitions. There shall be no discharge of drill cuttings.

3. Derivation of Permit Conditions Based on EPA's Best Professional Judgment of BAT for Drilling Fluids and Cuttings Discharges

a. Sources of Data and Information. A variety of information sources were used in the development of this

proposed general permit. These data sources are referenced within the body of the text and cited in full at the end of this section. The major categories of information employed included Environmental Protection Agency technical reports and guidance documents, Minerals Management Service environmental impact reports for lease sale activities, data from state oil and gas regulatory agencies, American Petroleum Institute reports and studies, proceedings from industry conferences and symposia, industry technical manuals, and industry trade publications. In addition to the above sources, a number of industry, public, and academic specialists through personal communications provided data and opinions on certain technical and economic considerations. These contacts are referenced in the document when they are the principal source of information. Beyond these contacts, no formal opinion or data collection surveys were undertaken.

b. Legal Basis—Introduction. The Clean Water Act establishes a comprehensive program to "restore and maintain the chemical, physical and biological integrity of the Nation's waters". The national goals established by the Act included eliminating the discharge of pollutants into navigable waters, prohibiting the discharge of toxic pollutants in toxic amounts, and developing technology necessary to eliminate the discharge of pollutants into navigable waters. To accomplish these goals, Congress set dates by which existing industrial dischargers would have to meet best practicable control technology currently available (BPT), best available technology economically achievable (BAT) for nonconventional and toxic pollutants and best conventional pollutant control technology (BCT) for parameters such as BOD, TSS, Ph, fecal coliform and oil and grease. Initially, industries were required to meet BPT by July 1, 1977 with BAT and BCT required by July 1, 1984. EPA was unable to promulgate many of the toxic pollutant regulations and guidelines within the original time frame specified within the Act. Subsequently, amendments to the Act state that BAT effluent limitations shall be achieved as expeditiously as practicable, but in no case, later than three years after the date such limitations are promulgated under section 304(b), and in no case later than March 31, 1989.

Criteria for Imposing BAT Technology Based Treatment Requirements Under 301(b) and 402 of the Act. Technology based treatment requirements under section 301(b) of the Act represent the minimum level of control that must be imposed in a permit issued under section 402 of the Act.

This BAT (BPJ) determination for drilling fluids and drill cuttings will result in a reasonable attempt toward the national goal of eliminating the discharge of pollutants into waters of the United States. BAT limitations in general represent the best existing performance of technology in the applicable industrial category or subcategory. The Act establishes BAT as a principal national means of controlling the direct discharge of toxic and non conventional pollutants.

The factors considered in assessing best available technology economically achievable (BAT) (40 CFR 125.3) include the age of equipment and facilities involved, the process employed, the engineering aspects of the application of various types of control techniques, process changes, non water quality environmental impacts (including energy requirements) and the cost of achieving such effluent reduction (see 304(b)(2)(B) of the Act). At a minimum, the BAT level of technology represents the best economically achievable performance of plants of various ages, sizes, processes, or other shared characteristics. Where the Agency has found the existing performance to be uniformly inadequate, BAT may be transferred from a different industrial category or subcategory. BAT may include feasible process changes or internal controls, even when not in common industry practice. The required statutory assessment of BAT "considers" costs, but does not require a balancing of costs against pollutant removal benefits (see *EPA* v. *National Crushed Stone Association,* 449 U.S. 64, 71 (1980)).

BAT (BPJ) Permit Requirements for Drilling Fluids and Drill Cuttings. The BAT (BPJ) effluent limitation for all drilling fluids and drill cuttings established for this proposed Texas Coastal general permit is "no discharge". This limitation is substantially different from the BPT effluent limitation for drilling fluids and cuttings for coastal wells, which only requires no discharge of free oil. It is also more stringent than the BAT (BPJ) effluent limitations in effect for drilling muds and cuttings in the Outer Continental Shelf general permit GMG280000 (see 51 FR 24897). BAT limitations in that permit prohibit the discharge of free oil in drilling fluids and cuttings, prohibit the discharge of oil based or invert emulsion drilling fluids and cuttings generated while using oil based muds, prohibit the discharge of drilling fluids that contain diesel oil and diesel contaminated cuttings, and limit the acute toxicity of drilling fluid discharges to a minimum 96 hour LC50 (lethal concentration to 50% of the test organisms) of 30,000 ppm Suspended Particulate Phase (SPP).

The decision to propose different BAT effluent limitations for drilling fluids and drill cuttings was primarily the result of two new technology considerations applicable to the Coastal Subcategory. The first consideration involved a more detailed examination of modern solids control equipment currently in use by industry. When such equipment is properly configured and operated a significant reduction in the volume of drilling fluids generated from drilling operations can be achieved and consequently, results in a reduced volume of toxic pollutants discharged. Industry sources have documented that it is possible to reduce the volume of drilling fluid wastes generated by as much as 90 percent by using a closed drilling fluid system (API 1987, SWACO 1989). The second consideration reexamined the feasibility and cost effectiveness of barging (or trucking) and onshore disposal of drilling wastes as an effluent treatment option. The nearness of coastal drilling operations to onshore nonhazardous oilfield waste treatment and disposal facilities coupled with the ability to reduce the volume of drilling fluid wastes generated through efficient solids control dictates that the "no discharge" option is both technologically feasible and economically achievable. A detailed description of the rationale and economic evaluation used in developing the BAT effluent limitation will be discussed in the following sections.

c. Existing Drilling Fluid Treatment Technology and Control Options. This section describes some of the control and treatment technologies that are currently being used by industry in coastal waters, wetlands and onshore for the treatment and disposal of drilling fluids and drill cuttings. Treatment options examined in developing a best professional judgment BAT permit limitation included closed cycle drilling fluid systems, annular disposal, barging and commercial landfarming and on site disposal.

Rotary Drilling Technology. Analysis of geological and geophysical data (i.e., well logs, cores, seismic, gravity, magnetics, etc.) provide the basic information on where potential hydrocarbon deposits are located. However, the only mechanism that can absolutely confirm the presence of oil and gas is exploratory drilling. When

commercial accumulations of hydrocarbons are discovered, the field is then "put on production" by drilling development wells. Exploratory and development drilling are mechanically very similar and generate similar types of wastes up to the point of production. Development wells will also generate completion, treatment and workover fluid wastes sometime during their life.

Since the early 1900's, the primary mechanism used to evaluate potential hydrocarbon deposits has been with the use of a rotary drilling rig. Rotary drilling is accomplished by rotating a bit at the end of a drill string which cuts and chips the rock formations encountered at the bottom of the hole. The drill string consists of 30 foot lengths of special high strength steel pipe ranging from 3.5 inches to 5 inches in diameter. Each length is referred as a joint and three joints make up a stand of pipe. When making a bit trip (retrieving and replacing a worn bit), pipe is pulled from the hole and separated into stands each consisting of three joints. This reduces trip time by reducing the number of pipe connections that must be made. Heavy-walled pipe (drill collars) are placed at the base of the drill pipe nearest the bit and provide the weight needed to drill. The type of bit used will vary depending upon the rock type being drilled. Most commonly tri-cone bits are used and get their name from the three cone shaped cutting wheels studded with teeth or buttons. The drill string also provides the mechanism of pumping drilling fluid to the bit and that fluid is then circulated back up the hole where the drilled rock cuttings are then removed by surface solids control equipment. The kelly, a multi-sided joint of pipe is screwed into the upper end of the drill string each time a new joint of pipe is added to deepen the hole. The kelly bushing is located in the rotary table and allows the kelly and entire drill string to rotate. The rotary motion is provided by the rotary table located on the rig floor through which the kelly passes. The kelly and drill string are supported by a block and tackle system which is in turn supported by the drilling derrick. During a drilling operation the open hole is periodically lined with steel pipe called casing to prevent the borehole from caving in, to protect weak formations from being fractured by high density drilling muds and to protect productive horizons from drilling mud contamination. Usually two or more casing strings are run in the hole in a telescoping fashion. The first string, the surface casing, is the largsst diameter and is run at fairly shallow depths. Successive strings are smaller in diameter and run in longer sections. To establish a bond between the casing and the hole a cement slurry is pumped down the casing, out a valve at the bottom (casing shoe) and up the annular space between the casing and the hole. When the casing has set for approximately 10 hours drilling resumes with a smaller bit.

Drilling Fluid Circulation System. Most rotary drilling operations employ a drilling fluid circulation system or active mud system which consists primarily of mud storage tanks or pits, mud pumps, stand pipe, kelly hose, kelly, drill string, well annulus, mud return flowline and solids separation equipment. The primary function of drilling fluid circulation is to carry drilled rock fragments from the bottom of the hole to the surface where they are then separated out. The mud circulation system begins with the mud pumps which are capable of moving large volumes of fluids at high pressures (up to 4,000 psi). The pumps draw drilling mud from the suction pit and forces it up the stand pipe a long vertical pipe attached to the derrick. The mud then enters the swivel through the kelly hose (or rotary hose). From the swivel, mud travels into the kelly and down to the bit through the drill string. The bit is usually equipped with three nozzles or jets, which causes the mud to be ejected from the bit at high velocity. The jets enable the drilling fluid to scour the bottom of the hole and also keep the teeth on the bit free of previously drilled cuttings. Completing the cycle of circulation, the mud returns to the surface through the space between the drill string and the borehole, commonly referred to as the well annulus. At the surface the mud flows by gravity feed through the mud flow line to the shale shakers and into the sand trap or settling pit. The settling pit, a large rectangular steel tank, receives the underflow from the shale shakers (a series of vibrating screens) which have removed the coarsest rock cuttings from the mud system. As its name implies, the settling pit has no agitation and thus allows the finer sand size particles to settle to the bottom and out of the mud system. The mud may then pass through other various solids removal equipment (removing successively smaller rock particles) and into additional pits for chemical treatment, storage, or mixing new mud (i.e., makeup pit) before returning to the suction pit.

Drilling Fluids. The drilling fluid plays a major role in a safe and successful drilling operation. Early drilling fluids were a simple mixture of clays and water. But as the search for hydrocarbons has expanded to deeper, higher temperature horizons and with the advent more radical directional drilling, so too have the requirements of the drilling fluid expanded. Drilling fluids have become complex mixtures of liquids, solids and chemicals, designed to interact in a predictable manner under given drilling conditions. The principal functions of drilling fluids include; transport cuttings to the surface, suspend cuttings when circulation is stopped, control subsurface pressures, cool and lubricate the bit and drill string, support the walls of the wellbore, minimize damage to the formation, help support the weight of the drill string, transfer hydraulic energy to the bit, and provide a suitable medium for running wireline logs.

The composition of a drilling mud will depend upon the requirements of the particular drilling operation. Holes must be drilled through different types of formations, requiring different types of drilling muds. The majority of drilling fluids are classified as water-based muds. This refers to any drilling fluid having water as the liquid or continuous phase and in which other materials are suspended or dissolved. There are numerous mud additives used to obtain special properties, but basically water based muds have three phases: (1) The continuous phase or water phase. (2) the reactive solids phase (commercial hydratable clays and drilled shales held in suspension) and are chemically treatable and (3) the inert solids phase (primarily drilled solids, limestone, sandstone and dolomite, and added barite for weighting) and are chemically unreactive. The solids in a drilling fluid can be separated into two distinct classes based on their specific gravity. Low gravity solids (drill cuttings) have specific gravities that range between 2.3 to 3.0 and average around 2.5. High gravity solids, primarily barite, have specific gravities above 4.2. The size of solid particles in the mud also play a significant role in maintaining proper drilling fluid characteristics. Solids produced by the drill bit vary considerably in size and range from colloidal to large cuttings. Particles less than 2 microns are classified as colloidal. These particles due to their small size are generally sensitive to surface electrical charges and thus are typically more active solids. Silt size particles range from between 2 microns and 74 microns in size. Particles over 74 microns are classified as API sand. A 200 mesh screen is used for the API sand test, and all particles which do not pass through the screen are classified as sand.

The instability of a drilling fluid (chemical and physical properties) tends to increase as the percentage of solids by volume in the mud increases (IMCO 1978). The concentration, particle size, type and reactivity of the drilled solids will determine the mud properties that will be affected. Specifically, mud weight, funnel viscosity, plastic viscosity, yield point, fluid loss characteristics and gel strength are directly affected by increasing solids concentration and can require constant dilution and building of new mud to maintain desired mud properties (SWACO 1989). The funnel viscosity or relative viscosity increases as the percent solids by volume increases. Solids generated viscosity means that not enough free water is available for particles move past each other. Solids develop a water envelope when introduced to the mud system which effectively enlarges the particle and reduces the free water content. Therefore, as solids increase so does the relative viscosity. An increase in solids also causes an increase in mud weight and can result in lower penetration rates. Plastic viscosity is a measure of the frictional forces in the drilling fluid. As solids concentration in the mud increases, the space between the particles decreases resulting in greater frictional forces As solids are ground into the colloidal and ultra fine size ranges, their effective surface areas increase dramatically and so does the plastic viscosity. From a control point of view it is extremely important to remove large solids early before they become entrained in the mud system and ground to finer and finer size fractions. High gel strengths are also associated with excessive solids buildup and result in higher pressure losses in the well annulus. This leads to high surge and swab pressures and could ultimately lead to lost circulation. High solids buildup can also affect the thickness of the wellbore filter cake. Filtrate volume is lowered by incorporating solids in the cake and the thickness of the cake generally increases which may also result in severe hole problems such as differential pressure sticking. Drill solids are generally not good solids substitutes for building an impermeable and compressible filter cake (Magcobar Solids Analysis Seminar).

In summary, mud solids control is one of the most important phases of mud control and exerts considerable influence on mud and well costs, drilling rates, hydraulics and the possibility of well kicks and lost returns.

There are four principal methods used to reduce the solids content of a drilling fluid: (1) Dilution, (2) displacement, (3) gravity settling and (4) mechanical separation.

The dilution method reduces the concentration of drilled solids by the addition of the liquid phase to the active mud system to reduce the relative volume occupied by the drilled solids. Eventually the increase in the mud volume will require a portion of the active system to be discharged. Typically, dilution and displacement are practiced concurrently. This method used alone can generate large volumes of drilling wastes.

The displacement method involves the removal or discharge of large volumes of drilling fluids from the active mud system and replacing the volume removed with new mud having the desired rheological properties. This method of solids removal can be very expensive because every barrel of mud that is discarded must be replaced which increases the overall cost of the mud system.

Settling is the separation of solid particles due to gravity and results from the difference in the specific gravities of the solids and the liquid. Settling rate depends upon particle size, specific gravity, and viscosity of the mud. The effective settling rate of solids can be increased by flocculants and viscosity reducing chemicals; however, settling is an extremely inefficient and slow method of solids removal.

Mechanical equipment separation selectively separates drill solids from the drilling fluid by either size or mass. Therefore all mechanical separators are designed to operate within certain particle size ranges for a given material. The specific equipment necessary to maintain desired mud properties and mud and well costs will be described in detail in a later section.

Current Industry Solids Control Practices. Solids processing equipment is an integral part of any drilling fluid system (Leyendecker 1986) and proper solids control management is absolutely essential in reducing ths volume of waste fluids generated during a drilling operation (Rafferty 1985). The specific equipment present on the rig is dependent upon the depth, type of formations being drilled and the imposition of environmental controls by state or federal regulation. Typical solids separation equipment present on any given rig might include any or all of the following: shale shakers, desander, desilter, centrifuge, mud cleaner, mud gas separator, and various forms of mud agitators (mud guns and mechanical stirrers). An adequate solids control program is a key factor in drilling fluid economics as well as being able to maintain the system so as to minimize drilling problems (Leyendecker 1986).

Proper solids control practices are often disregarded by industry primarily due to up front cost considerations (equipment installation and rental) irrespective of information that shows the cost effectiveness of maintaining good solids control (Cagle 1987). A simple dilution model showed that a minimal 10 percent increase in solids removal efficiency resulted in a significant savings of over $500.00 per day in mud costs. Cagle also concluded from the results of numerous rig surveys that lower solids control efficiencies require more dilution. Every barrel of dilution fluid must be purchased and converted to drilling mud (cost dependent upon fluid type and weight) and higher dilution requirements automatically require higher mud costs. Instead of removing drilled solids through mechanical means to maintain an acceptable level of low gravity solids (cuttings) in the drilling fluid it is also possible to discharge part of the mud system and replace it with new mud (lower solids fluid), effectively diluting the solids content of the overall mud system. This dilution practice greatly increases the volume of drilling wastes generated over the life of the well. A recent rig survey by Cagle 1987, indicated that the typical drilling rig operating with the typical contractor solids control equipment was operating at between 25 percent and 50 percent efficiency.

Hoberock and Williams in 1983, conducted a field survey of 33 drilling rigs, with the intent of evaluating the use of solids control equipment and to focus on the most common and detrimental errors made in using the technology. The results showed that 56 percent failed to meet minimum performance criteria for shale shaker installation; 53 percent of the desilter/desander installations had insufficient capacity to process the full flow of the drilling fluid; 66 percent had improper centrifugal pump installations with the main problems resulting from incorrect motor or impeller sizing; 78 percent were equipped with difficult to maintain or poorly maintained solids removal equipment (roping cones verified low efficiency); and 81 percent had drilling fluid routing errors associated with the desander/desilter installations which resulted in as little as one-half of the rig circulation being processed. In general, this survey showed that industry was a long way from implementing known technology. Leon Robinson, a research advisor at Exxon Production Research and expert

in solids control equipment, gave an interview to the Petroleum Engineer International trade publication in June 1988 on the merits of good solid control. He too found that one of the most common problems in relation to solids control was improper plumbing of the equipment. With improper plumbing only 30 percent to 60 percent of the entire drilling fluid system is typically processed through the solids separation equipment. Other problems with equipment plumbing were failure to install partitions in mud tanks, and improper feeding of the mud from the suction tank.

Closed Cycle Drilling Fluid Systems. Closed cycle drilling fluid systems are defined as systems in which mechanical solids control equipment (screen shakers, hydroclones, mud cleaners, centrifuges, mud gas separators, etc.) and collection equipment (roll off boxes, vacuum trucks, shale barges, etc.) are used to minimize waste mud and cutting volumes to be disposed of onsite or offsite. This ultimately serves to maximize the volume of drilling fluid returned to the active mud system (Hanson et al. 1986). The primary economic benefit of implementing an effective solids control program using a closed cycle system is a reduced mud cost; however, other less tangible but equally significant economic factors include increased penetration rates, reduced cost for chemical treatment, increased bit life, increased control of mud properties, reduced maintenance costs of surface equipment, improved accuracy of downhole information, reduced risk of differential pressure sticking, reduced cementing problems, reduced formation damage, reduction in reserve pit size or elimination of reserve pit for onland applications, and ultimately a reduced volume of drilling waste fluids generated.

Closed cycle systems can be used in both offshore and onshore drilling operations (Hanson et al. 1986) and are currently being used in the coastal waters of Louisiana (per. comm. w/ SWACO and Cliffs Drilling contractors).

The equipment and technology that comprises closed cycle drilling fluid systems has been available for a number of years. Field-practical decanting centrifuges were first introduced in 1952, efficient 6" hydrocyclones in 1954, much more efficient 4" hydrocyclones in 1962 and very fine shale shaker screens in 1966 (Ormsby in Moore 1974). In the last 10 years additional progress has been made in the field of solids control. In regard to more conventional equipment, finer and more durable screens are being run on shale shakers, more durable centrifugal pumps are available, more efficient degassers have been developed, high efficiency hydrocyclones have been introduced, and centrifuges with more wear resistant conveyers and higher G-levels are available. In addition, more specialized equipment has been introduced, such as the vacuum-belt filter (Cagle 1987). Regardless of these significant improvements in solids control technology, Cagle (1987) found that efficient solids control practices are not being implemented in many of the wells being drilled. The results of poor solids control is slower rate of penetration, increased mud costs, increased downhole problems, and increased wear on surface equipment. Poor solids control increases the cost of drilling and usually far exceeds the cost of installing and operating the equipment.

The first functionally complete closed cycle drilling fluid system was developed and operated in early 1976. Since then, closed systems have been used in numerous locations throughout the world. An efficient solids control system (closed cycle system) is composed of various pieces of mechanical equipment, each installed in its proper place with all required auxiliary equipment correctly sized and positioned. In addition it is important that the equipment be properly operated and maintained to achieve maximum efficiency, and each is sized to handle the maximum circulation rate to be expected during drilling operations. A pump is sized to supply each unit of solids removal equipment, and all flow lines are properly plumbed and designed to be as short and straight as possible (Churchwell 1981). Solids control equipment should be arranged in order of their respective particle size separation i.e. shakers at the flowline and centrifuges just before the pump suction. Each piece of solids removal equipment must take suction from an upstream compartment and discharge to a compartment downstream of its own suction. The type of solids removal equipment installed in the removal section of an active mud system is dependent upon the type of drilling operation and disposal requirements. Generally the equipment is configured for unweighted mud systems, weighted mud systems and oil mud systems or dry location zero fluid discharge situations. In general, the solids processing equipment found on an effective closed cycle system would include some or all of the following depending upon the drilling requirements: two or more fine screen shakers, desander, desilter, mud cleaner(s), microclones, decanting centrifuges, and mud degasser.

A typical closed cycle drilling fluid system for an unweighted mud would be configured as follows. The shale shakers are the first piece of equipment located at the flowline to remove solids as the drilling fluid returns to the surface. The complete flow of the mud should be processed evenly over both of the dual screen fine mesh shakers. The finest mesh screen possible should be used that will allow at least 75 percent of the surface of the screens to be covered with mud. Drilled solids larger than the screens openings pass off the end of the shakers and into a reserve tank. The drilling fluid that passes through the screens collects in the sand trap compartment. The sand trap is the first mud collection compartment of the active mud system. The sand trap is a settling tank that functions as a safety device to protect other downstream solids removal equipment by trapping the large solids in the event of a shaker bypass or if a screen becomes damaged or torn. The sand trap delivers mud to the rest of the active mud system over a high overflow weir into the next downstream compartment. If the mud has the potential to contain gas or become "gas-cut" the degasser should be utilized in the first compartment downstream of the sand trap so that gas free mud is fed to the remaining solids removal equipment. Hydroclones and centrifugal pumps do not operate efficiently on gas-cut muds. The desander is the first hydroclone used following the shaker. The feed pump should take its suction from the first compartment downstream of the sand trap or the discharge compartment from the degasser. The desander should be sized to handle at least 125 percent of the highest anticipated circulating volume. The overflow from the desander is discharged in the next downstream compartment and the underflow is discarded to the reserve tank. The desilter hydroclone receives feed from the desander overflow compartment. The overflow of the desilter is discharged to the next downstream compartment and the underflow is discarded to the reserve tank. To maintain proper operating efficiency both the desander and desilter should have their own correctly sized centrifugal pump. If a mud cleaner is used on an unweighted mud system, it should be rigged up in the same location as the desilter and operated as a desilter, reducing the chance of introducing ultra,fine particles back to the active system. High efficiency

microclones (20 2" hydroclones) take their suction from the desilter overflow compartment. The overflow or liquids and fine solids are returned to the next downstream compartment of the active mud system. The wet solids underflow (10–17 micron size fraction) is then directed to the decanting centrifuge for processing. In this particular instance the centrifuge is rigged up for solids removal (not barite recovery) and is used primarily to dry up the very wet microclone discharge. The centrifuge underflow (>7 micron solids) are discarded to the reserve tank and the liquid and fine solids overflow is discharged to the next downstream compartment. At this point a second decanting centrifuge takes its suction from the overflow tank of the first centrifuge. This high speed centrifuge is used primarily as a clarifier to remove the remaining ultra-fine, 2–3 micron sized solids. The solids are discarded to the reserve tank and the liquids are returned to the active mud system. From here the mud is pumped to other various treatment or mixing tanks before returning to the suction tank where it is recycled back down the well annulus.

In a weighted mud system the desander and desilters are usually replaced by mud cleaners and the microclone is not operated. In both instances barite passes through the mud cleaner screens and returns to the active mud system with the liquid and solids underflow. Drilled solids are discarded to the reserve tank from the screen overflow. Dual decanting centrifuges are used for barite recovery, maximum removal of drilled solids, and retention of chemicals and liquids to the active mud system. Drilling fluid from the underflow of the desilter/mud cleaner is directed to the first centrifuge to recover the barite weighting material. The solids underflow containing the removed barite is returned to the active mud system. The liquid and fine solids discharge is directed to a holding tank where it is then fed to a high speed centrifuge to remove the ultra-fine solids. The solid fraction is discarded and the liquid is returned to the mud system.

The use of mud recirculation systems as described above is a common practice for onshore drilling and are beginning to be used more in offshore and coastal waters. Their use represents great benefit, as they can reduce the water and mud input requirements. This translates into cost savings on raw materials and also results in a reduction of waste material generated requiring disposal (EPA 1986).

Equipment Characteristics. Following is a more detailed discussion on the operational characteristics of the previously described solids removal equipment.

Shale Shakers. Solids control on most wells begin with the shakers which have the potential of removing large amounts of solids before they are broken up into finer particles and become entrained in the mud system. The smaller the solids particle the more difficult it becomes to remove later.

Shale shakers are large single or double decked vibrating screens through which the mud flow returning from the well bore is first directed. The principle behind screening separation is that the larger sized material (larger than the openings in the screen) is retained on the screen's surface and is discarded as waste, whereas the smaller sized solids that pass through the screen are retained and returned to the active mud system. Wire screens are usually classified by their API "mesh" size, which specifies the number of wires per linear inch. The mesh sizes available range from a very coarse 10 mesh to ultra fine 325 mesh.

Shale shakers have undergone vast improvements over the last 10 years with most of the work being done in the areas of screen design and vibrating pattern. The results of these improvements is the ability to run finer screens greatly improving solids removal capability. Up until about 1978, the practical limit for shaker screens was about 80 mesh (Cagle 1987) but, with the development of new screen technology much finer screens are now possible. A 200 mesh (74 micron) screen now seems to be the practical operating limit for shaker screens. This size screen would permit 97 percent of the barite in the system to pass through and be retained in the mud system. The remaining 3 percent would be discarded with the drilled solids (SWACO 1989). Bonded screens now being employed are generally of two types, perforated metal plate to which screen is bonded and a fine screen bonded to a stiff coarse backup cloth. One of the principal advantages over earlier fine screens is that rips and tears can now be easily repaired, which results in a much longer usable life (Cagle 1987).

The types of vibratory motion available in different models of shakers include circular, elliptical and most recently linear. The type of motion used is dependent upon type of solids, drilling fluid and volume being processed.

Hydroclones. The next separation equipment after the shale shaker are the desander and desilter hydroclones and the microclone. The desander is designed to remove particles down to approximately 40 microns, the desilter will remove particles as small as approximately 20 microns and microclone will remove solids in the 10–14 micron range. Hydroclones are conical-cylindrical devices with no internal moving parts. The conical portion of the hydroclone is at the bottom of the clone and the cylindrical feed chamber is at the top. At the apex of the conical section or bottom is the underflow opening through which the separated solids are discharged. Near the top of the feed chamber is an inlet opening that is positioned perpendicular to the axis of the clone. The vortex finder, a hollow cylinder, extends from below the inlet feed up through the feed chamber and forms the outlet for the overflow. During operation, drilling fluid is pumped through the tangential opening (feed inlet) in the cylindrical section of the housing which forces the mud to start spiraling downward toward the apex of the cone body. Centrifugal force acts upon the larger and heavier particles which are thrown outward toward the wall of the cone, while finer, lighter particles move toward the center with the moving fluid. The large particles and small amounts of fluid are discarded out the apex. The remaining fluid and finer solids reverse direction and pass back up inside the cone of fluid and out the vortex finder at the top of the clone. As in a natural cyclone, there is a central air core within the inner spiral.

In general, separation efficiency is dependent upon the following general parameters: plastic viscosity of the fluid, feed solids load, flow, hydroclone size and proper rig up. The main advances in hydroclone technology have taken place in wear resistant synthetic materials and improved design. Most of the hydroclones in use today are replaceable and are made of polyurethane (Cagle 1987). Size and proper rigging are also important factors. Improper fluid routing may reduce the amount of drilling fluid treated by 50 percent (Cagle 1987). Young (1987) showed that new smaller hydroclones should operate 25 to 50 percent more efficiently than 4 inch desilter hydroclones more typically used today.

Mud Cleaner. Mud cleaners were developed in the early 1970's for removing sand from weighted mud systems. Desanders and desilters can be used for this purpose, but barite losses quickly reduce the economics of the operation. The mud cleaner is a combination hydroclone-shale shaker

device and consists of hydroclones (size of clone dependent upon the size of particle being removed) mounted above a fine screen shaker. The hydroclone underflow is directed to a fine mesh screen where the solids (barite and small cuttings) and liquid muds will be returned to the mud system through the screen. The solids that collect on the screen are discarded. The need for mud cleaners has been reduced considerably with finer screens being run on shale shakers and specifically in unweighted mud systems where the mud cleaner should be operated as a desilter with the screen blocked off and the underflow being discarded to the reserve pit (Cagle 1987).

Decanting Centrifuge. The decanting centrifuge consists of a rotating cone shaped drum that rotates at a high rate of speed (1200–3500 rpms) and a screw conveyor within the bowl turning at a slower speed (20–90 rpms slower) that moves the coarse particles toward the discharge port. This differential speed allows a slow relative motion to exist within the bowl while the high rate of rotation develops a strong centrifugal force that throws heavier particles toward the outside of the bowl. The screw conveyor scrapes off the solid material where it is then discarded through the discharge ports at the small end of the centrifuge. The liquid fraction is returned to the active mud system through the liquid regulating weirs at the large end of the centrifuge.

Centrifuge applications may be categorized as either primary or secondary separation. Primary separation is where the centrifuge is used directly on the active mud system for the purpose recovering barite in weighted drilling muds. In this application up to 95 percent of the usable barite is returned to the active mud system while the liquid effluent containing ultra-fine solids is discarded to the reserve pit. Secondary recovery is where the centrifuge is processing the effluent or underflow from hydroclones, mud cleaners or centrifuges. Secondary recovery using duel centrifuges has the added advantage of processing the liquid effluent from the first centrifuge by a second high speed centrifuge which remove a large percentage of the ultra-fine solids, and returns costly chemicals, bentonite and liquids back to the active mud system. Benefits are reduction of liquid consumption, reserve pit size (if applicable) and disposal costs.

d. Economic Analysis. This section examines the cost requirements and economic feasibility of imposing the selected BAT technology based permit limitations on the discharge of drilling muds and drill cuttings to coastal waters. Cost estimates used in the following economic analysis were obtained from various industry contractors based on current pricing schedules and actual cost information.

Model Well Characteristics. Model well characteristics were established for the purpose of estimating compliance costs per facility for the no discharge of drilling fluids and drill cuttings limitation in this permit. The characteristics of the model well used in this analysis generally represents a maximum cost/worst case scenario for most input parameters (Table 2). This approach was taken because it is impractical to analyze all drilling situations which might occur in the subcategory. Generally, the depth of the well and correspondingly the number of days required to drill the well gives the most direct indication of the overall cost of the drilling operation and would represent the highest expected cost for solids control equipment and the largest volume of drilling wastes. Thus, if the economics for the proposed permit limitations proved feasible for the worst case scenario, then it was assumed that shallower less costly wells would also be economic.

Economic Scenarios. Three economic scenarios were developed that are representative of the different levels of solids control that are currently in use in the coastal area. Each represents an increasing level of up front expenditures such as retrofitting costs. and equipment rental costs and also represents a decrease in the volume of drilling fluid waste generated. Cost estimates presented below were obtained through personal communications with various drilling contractors and are believed to reflect current industry rates.

Scenario 1. This model represents the minimum level of solids treatment technology and imposes the lowest level of equipment cost to the operator. This scenario is probably most representative of current industry practice in coastal waters. The equipment used for solids maintenance would include one or two shakers, a desilter and a desander. Average equipment efficiency for removing drilled solids would be approximately 38 percent (See Cagle 1987). This model represents a minimal treatment/barging option (Table 3).

Scenario 2. This model represents an intermediate level of solids control efficiency, with the equipment being used to include shale shakers, desilters, desanders, mud cleaners, and microclones. Average equipment efficiency would be approximately 62 percent (Table 4).

Scenario 3. The third model represents the closed cycle drilling fluid system, and characterizes the best solids control technology in use by industry. The equipment used would include the same equipment found in scenario 2 but would also include decanting centrifuges and possibly a polymer flocculation unit. Equipment efficiency would average around 90 percent (Table 5).

In summary, to meet the no discharge limitation for drill cuttings and drilling fluids, an expenditure of $183,450 per well (approx. 11 percent of the total cost) would be required (Table 6). This is believed to represent a worst case/highest cost estimate and is expected to be lower for most drilling operations. Drilling disposal costs have been estimated at the high end for water based muds and may more typically run between $5 to $10 per bbl range, depending upon oil content and salinity (see Non Water Quality Impacts Section). In addition, substantial retrofitting costs have been included in the model each time a well is drilled. These costs are incurred by the operator when the solids equipment contractor or drilling contractor bids the job. However, once a rig or barge has been modified so that the equipment can be installed then this cost (approx. $35,000) would not be charged again to the operator. This would substantially lower the overall cost of compliance. This analysis has not taken into consideration cost savings (pit construction and pit closure) to operators in marsh areas that use reserve pits and ring levees to contain drilling fluids. This analysis also does not include more difficult to document savings to the operator on drilling costs, due to improved mud properties using closed cycle systems i.e., increased rate of penetration and fewer rig days, lower probability of stuck pipe, decreased number of bits required, reduced wear on surface equipment etc.

Since closed system drilling fluids technology is routinely used both in onshore and offshore drilling operations (onshore areas where reserve pits are prohibited by private land owners, offshore waters where operators drill with oil based muds, and coastal waters where discharge of drilling muds are prohibited by state permit) the Region believes that this technology is directly applicable to the permits it is proposing for the coastal waters of Texas and Louisiana. Thus, based on the current use of closed mud systems this technology has been demonstrated to be technically feasible and economically achievable.

e. Non Water Quality Environmental Impacts. This section evaluates the non-water quality environmental impacts of implementing the BAT permit limitations. These aspects include energy requirements, solid waste generation and onshore disposal, air pollution, dredging, and water use.

Land Disposal Facilities for Non Hazardous Wastes (NOW). The most significant non-water quality environmental impact of the proposed permit action prohibiting the discharge of drilling fluids and drill cuttings is the onshore disposal of the drilling wastes. Closed cycle drilling systems effectively reduce the volume of drilling fluid waste generated and consequently the volume of waste that must be disposed of at an onshore disposal site.

In Texas, over 50 small approved commercial facilities (as of 1/1/89) have been permitted by the Railroad Commission, to store, treat and dispose of non-hazardous wastes (NOW) generated from oilfield operations. There are currently 19 commercial and 2 noncommercial facilities permitted by the Railroad Commission to dispose of water based drilling mud in the Texas coastal area. The total capacity of these facilities is approximately 28 million barrels and 0.25 million barrels, respectively. In addition, several large commercial waste treatment companies are currently seeking permits to land farm and process drilling muds and cuttings. The types of waste that a particular facility processes generally depends upon the concentration and type of oil found in the waste and chloride concentration of the waste. The Railroad Commission of Texas (Oil and Gas Division) maintains a list of the approved NOW commercial facilities for the various districts in Texas and types of wastes they treat. This information was used to broadly characterize the availability of disposal sites and their ability to process the additional waste load as a result of this permit action. Based on the above information, it appears that adequate capacity is available for land disposal of drilling fluids as a result of this proposed permit action. It is believed that additional processing capacity of drilling wastes would be directly related to demand.

Energy Requirements. Additional energy requirements necessary to meet the proposed BAT effluent limitations on drilling muds and cuttings are assumed negligible. Diesel electric rig generators that supply energy to run the standard solids equipment would be adequate to power any additional equipment load.

Air Pollution. Additional air emissions may be created due to the increased activity in hauling shale barges or trucking drilling wastes to the treatment facility However, these minor increases in airborne emissions are deemed to be insignificant when compared to the pollutant removal associated with the treatment technology.

Consumptive Water Use. Since little or no additional water is added to the operation above usual consumption, no water loss is expected as a result of the proposed permit limitations.

Dredging. Only minor additional dredging may be required as a result of this permit action. It is believed that the channels dredged for rig placement, crew boats and supply boats are sufficient to support the additional traffic from barging drilling wastes to collection and transfer terminals.

C. State Water Quality Standards, Rules and Regulations

EPA is required under 40 CFR part 122.44(d)(1) to include conditions as necessary to achieve the States' water quality standards as established under section 303 of the Clean Water Act.

1. Drilling Fluids

a. Prohibition. There shall be no discharge of drilling fluids.

This limitation is based both on numerical criteria for metals to be met at the edge of the mixing zone and on the Texas hazardous metals board order rule, 31 TAC 319 (*See* Derivation of Conditions based on water quality standards).

b. Limitations—Free Oil. The limitation of free oil is that a sheen shall not be detected on the surface of the receiving water. Monitoring must be accomplished once per day, when discharging during conditions when an observation of a sheen is possible. The number of days a sheen is detected must be recorded.

The Railroad Commission of Texas has established requirements for the protection of the State's water resources from activities associated with the exploration, development and production of hydrocarbon resources in Statewide Rules for Oil, Gas and Geothermal Operations (amended December 1, 1987). Based on the Railroad Commission's interpretation of Rule 8(e)2(e) for drilling fluids, there shall be no discharge of free oil, monitored by visual sheen observation. "Drilling muds which contain oil shall be transported to shore or a designated area for disposal. Only oil free cuttings and fluids from mud systems may be disposed of into Texas offshore and adjacent estuarine zones at or near the surface".

2. Drill Cuttings

a. Limitations—Free Oil. The limitation of free oil is that a sheen shall not be detected on the surface of the receiving water. Monitoring must be accomplished once per day, when discharging during conditions when an observation of a sheen is possible. The number of days a sheen is detected must be recorded.

The Railroad Commission of Texas has established requirements for the protection of the State's water resources from activities associated with the exploration, development and production of hydrocarbon resources in Statewide Rule 8 (amended December 1, 1987). Based on the Railroad Commission's interpretation of 8(e)2(e) from the rule, there shall be no discharge of free oil, monitored by visual sheen observation. "Only oil free cuttings and fluids from mud systems may be disposed of into Texas offshore and adjacent estuarine zones at or near the surface".

3. Produced Water

Produced water discharges to the coastal waters of Texas are not covered by this permit action. This waste stream will however, be covered under a separate subsequent permit for oil and gas production related activities.

4. Produced Sand

Produced sand discharges to the coastal waters of Texas are not covered by this permit action. This waste stream will however, be covered under a separate subsequent permit for oil and gas production related activities.

5. Treated Wastewater From Drilling Fluids and Cuttings Dewatering Activities, and Pit Closure Activities.

The State of Texas currently allows the discharge of treated wastewater from dewatered drill site reserve pits after the contents of the pits have been flocculated or otherwise chemically or mechanically treated when the following discharge limitations are met.

a. Limitations—Free Oil. The limitation of free oil is that a sheen shall not be detected on the surface of the receiving water. Monitoring must be accomplished once per day, when discharging during conditions when an observation of a sheen is possible. The number of days a sheen is detected must be recorded.

The Railroad Commission of Texas has established requirements for the protection of the State's water resources from activities associated with the exploration, development and production of hydrocarbon resources in

Statewide Rule 8 (amended December 1, 1987). Based on the Railroad Commission's interpretation of 8(e)2(b) from the rule, there shall be no discharge of free oil, monitored by visual sheen observation. "No oil or hydrocarbons in any form or combination with other materials or constituent shall be disposed of into the Texas offshore and adjacent estuarine zone".

Oil and Grease. Treated wastewater must meet a daily maximum limitation of 15 mg/l prior to discharge. Samples must be collected as a grab and analyzed once per day. If the effluent is batch treated and discharged, then the monitoring is once per discharge event.

Total Suspended Solids. Treated wastewater shall not exceed 50 mg/l TSS, as a daily maximum. A grab sample must be collected and analyzed once per day. If the effluent is batch treated and discharged, then the monitoring is once per discharge event.

Total Dissolved Solids. Treated wastewater shall not exceed 3,000 mg/l TDS, as a daily maximum. A grab sample must be collected and analyzed once per day. If the effluent is batch treated and discharged, then the monitoring is once per discharge event.

[Exception] Total dissolved solids (TDS) concentration may exceed 3,000 mg/l in tidally influenced watercourses (downstream of the upper limit of saltwater intrusion) if the TDS concentration of the treated reserve pit effluent does not exceed the TDS concentration of the receiving water at the point of discharge at the time of discharge.

Chemical Oxygen Demand. Treated wastewater shall not exceed 200 mg/l COD, as a daily maximum. A grab sample must be collected and analyzed once per day. If the effluent is batch treated and discharged, then the monitoring is once per discharge event.

pH. Discharges of treated wastewater must meet a daily pH limitation of not less than 6.0 and not greater than 9.0 at the point of discharge. Samples must be collected as a grab and analyzed once per day. If the effluent is batch treated and discharged, then the monitoring is once per discharge event.

Chlorides. Treated wastewater shall not exceed 500 mg/l as a daily maximum in inland areas, and shall not exceed 1,000 mg/l as a daily maximum, in tidally influenced watercourses. Samples must be collected as a grab and analyzed once per day. If the effluent is batch treated and discharged, then the monitoring is once per discharge event.

[Exception] Chloride concentration may exceed 1,000 mg/l in tidally influenced watercourses (downstream of the upper limit of saltwater intrusion) if the chloride concentration of the treated reserve pit effluent does not exceed the chloride concentration of the receiving water at the point of discharge at the time of discharge. Inland regions are defined to be those regions where natural drainage is into any watercourse which is not tidally influenced.

Hazardous Metals. The discharge must not contain concentrations of any substance classified as a hazardous metal in excess of the levels established at 31 TAC 319 as an end of pipe limitation (See Derivation of Permit Conditions Based on State Water Quality Standards, Rules and Regulations). A grab sample must be collected and analyzed once per day. If the effluent is batch treated and discharged, then the monitoring is once per discharge event.

Note: Dilution of the reserve pit effluent or the use of dispersants or surfactants to meet any of the above standards is prohibited.

6. Formation Test Fluids

a. Limitations—Free Oil. The limitation of free oil is that a sheen shall not be detected on the surface of the receiving water. Monitoring must be accomplished once per day, when discharging during conditions when an observation of a sheen is possible. The number of days a sheen is detected must be recorded.

The Railroad Commission of Texas has established requirements for the protection of the State's water resources from activities associated with the exploration, development and production of hydrocarbon resources in Statewide Rule 8 (amended December 1, 1987). Based on the Railroad Commission's interpretation of 8(e)2(b) from the rule, there shall be no discharge of free oil, monitored by a visual sheen observation. "No oil or hydrocarbons in any form or combination with other materials or constituent shall be disposed of into the Texas offshore and adjacent estuarine zone".

7. Well Treatment Fluids, Completion Fluids, and Workover Fluids

a. Limitations—Free Oil. The limitation of free oil is that a sheen shall not be detected on the surface of the receiving water. Monitoring must be accomplished once per day, when discharging during conditions when an observation of a sheen is possible. The number of days a sheen is detected must be recorded.

The Railroad Commission of Texas has established requirements for the protection of the State's water resources from activities associated with the exploration, development and production of hydrocarbon resources in Statewide Rule 8 (amended December 1, 1987). Based on the Railroad Commission's interpretation of 8(e)2(b) from the rule, there shall be no discharge of free oil. monitored by a visual sheen observation. "No oil or hydrocarbons in any form or combination with other materials or constituent shall be disposed of into the Texas offshore and adjacent estuarine zone".

8. Deck Drainage

a. Limitations—Free Oil. The limitation of free oil is that a sheen shall not be detected on the surface of the receiving water. Monitoring must be accomplished once per day, when discharging during conditions when an observation of a sheen is possible. The number of days a sheen is detected must be recorded.

The Railroad Commission of Texas has established requirements for the protection of the State's water resources from activities associated with the exploration, development and production of hydrocarbon resources in Statewide Rule 8 (amended December 1, 1987). Based on the Railroad Commission's interpretation of 8(e)2(b) from the rule, there shall be no discharge of free oil, monitored by a visual sheen observation. "No oil or hydrocarbons in any form or combination with other materials or constituent shall be disposed of into the Texas offshore and adjacent estuarine zone".

9. Miscellaneous Discharges

Desalination Unit Discharge
Blowout Preventor Fluid
Uncontaminated Ballast Water
Uncontaminated Bilge Water
Mud, Cuttings, and Cement at the Seafloor
Uncontaminated Seawater
Uncontaminated Freshwater
Boiler Blowdown
Excess Cement Slurry
Diatomaceous Earth Filter Media

Free Oil. The limitation of free oil is that a sheen shall not be detected on the surface of the receiving water. Monitoring must be accomplished once per day, when discharging during conditions when an observation of a sheen is possible. The number of days a sheen is detected must be recorded.

The Railroad Commission of Texas has established requirements for the protection of the State's water resources from activities associated with the exploration, development and production of hydrocarbon resources in Statewide Rule 8 (amended December 1,

1987). Based on the Railroad Commission's interpretation of 8(e)2(b) from the rule, there shall be no discharge of free oil, monitored by a visual sheen observation. "No oil or hydrocarbons in any form or combination with other materials or constituent shall be disposed of into the Texas offshore and adjacent estuarine zone".

10. Derivation of Permit Conditions Based on State Water Quality Standards, Rules and Regulations

a. Description of Applicable State Water Quality Standards and Resulting Permit Conditions. The Texas Water Quality Standards, set forth by the Texas Water Commission, establish general and numerical criteria for discharges to state waters. The Commission delegates the responsibility of controlling pollution to state waters from activities associated with the exploration, development, and production of oil or gas or geothermal resources to the Railroad Commission of Texas. As such, the Railroad Commission developed Statewide Rule 8 for Oil, Gas, and Geothermal Operations (most recently amended January 6, 1987) which establishes operational guidelines and specific discharge requirements for these operations. All authorized discharges must also meet the standards as set forth by the Texas Water Commission.

General criteria apply at all times to all surface waters of the state (i.e., including waters within a mixing zone), except where specifically exempted, and apply to the following parameters:

- Aesthetics
- Color
- Floating, suspended, and settleable solids
- Taste and odor
- Toxic substances
- Oil and grease
- Foaming or frothing materials
- Nutrients
- Turbidity
- Other substances and characteristics

General criteria clearly appropriate for regulating drilling fluids and cuttings discharges include those for floating, suspended and settleable solids, toxic substances and turbidity. The standard for solids requires that; "surface water be essentially free of floating debris and suspended solids that are conducive to producing adverse responses in aquatic organisms or putrescible sludge deposits or sediment layers which adversely affect benthic biota or any lawful uses", "surface waters be essentially free of settleable solids conducive to changes in flow characteristics * * * or untimely filling * * *", and "waste discharges shall not cause substantial and persistent changes from ambient conditions of turbidity or color".

This Region believes that the discharge of drilling fluids and cuttings in shallow water areas would result in the formation of significant sludge deposits and sediment layers that have the potential of producing adverse responses in aquatic organisms and benthic biota. The adverse affects would be in the form of burial of benthic organisms and changes in the substrate. Suspended and particulate matter potentially could inhibit sight feeding animals, clog their feeding apparatus or possibly damage gills in fishes (Kinne 1970) and decrease dissolved oxygen concentrations in localized areas due to the high biological and chemical oxygen demands associated with drilling fluids and drill cuttings (See EPA 1985).

Numerical criteria for waters of the State of Texas, which are standards that must be met outside the mixing zone, are established for the following parameters:

- pH: 6.5 to 9.0
- chlorides, sulfates, and total dissolved solids: not available (case-by-case)
- dissolved oxygen: not less than 5 mg/l
- temperature: maximum differential Fall, Winter, Spring 4 °F; maximum differential June—August 1.5 °F; maximum temperature 95 °F
- bacteria: <14 per dl (MPN); <43 per dl (MPN) for 90% of samples
- toxic substances:

—nonpersistent toxic materials shall not exceed 0.1 of the 96-hour LC50
—persistent toxic materials shall not exceed 0.05 of the 96-hour LC50
—bioaccumulative toxic materials shall not exceed 0.01 of the 96-hour LC50

In the Texas standards, specific numerical criteria are established for toxic substances (31 TAC 307.6(c)) for which the state has determined that adequate toxicity information is available. Texas has specified 30 instream numerical criteria (10 metals) expressed as fresh water acute, fresh water chronic, marine water acute and marine water chronic. The marine acute and chronic criteria for the ten listed metals (arsenic, cadmium, chromium, copper, lead, mercury, nickel, selenium, silver, and zinc) were compared to the concentrations estimated for drilling fluid metals at the zone of initial dilution (ZID) and at the edge of the mixing zone. EPA marine water quality criteria and human health criteria were also compared to the estimated drilling fluids metals concentration at the ZID and edge of the mixing zone. EPA criteria were examined for informational purposes only. Permit limitations are based on Texas standards.

Drilling fluid discharges have been characterized by three data sets for metals and organics. The muds analyzed adequately represent mud systems that would be used in the permit area. The analytical data set for metals found in drilling fluids is from the 8 generic muds (CENTEC, 1984), the 11 PESA used muds supplied to EPA Gulf Breeze (SAIC, 1984), and 66 muds analyzed as a part of the Diesel Pill Monitoring Program (DPMP) under NPDES general permit GMG 280000 (EPA, 1987). These data sets were combined to yield weighted average mean values and weighted average upper 95th percentile concentrations and are presented in Table 7.

To determine compliance with Texas water quality standards the mean effluent metal concentration from the drilling fluids database was divided by the Texas criteria to give the number of dilutions/dispersions needed to meet the state standards (Table 8). Of the ten metals examined, the mean concentration for copper failed to meet the acute and chronic criteria and mercury failed to meet the chronic criteria (at a 100 barrels per hour discharge rate). When examining the upper 95 percentile concentrations of metals present in drilling fluids, copper, lead. chromium and mercury failed to meet the state chronic standards when discharging at 100 barrels per hour (Table 9). At 1,000 barrels per hour discharge rate the mean concentration of 5 of the 10 metals examined failed to meet the state chronic criteria and 6 failed to meet the state acute criteria (Table 10). Based on these results, there shall be no discharge of drilling fluids to the coastal waters of Texas (See following discussion of mixing zone).

The Texas Water Commission requires under its implementation policy of the State's recently revised Water Quality Standards (31 TAC 307.1–307.10), that effluent discharge limits for metals will not be greater than those established at 31 TAC 319.21–319.49, for Hazardous Metals. These limits have been set by the Texas Water Commission as upper maximum concentrations not to be exceeded at the end of pipe. The Hazardous Metals Rule regulates the allowable concentrations of each of the listed metals (Arsenic, Barium, Cadmium, Chromium, Copper, Lead, Manganese, Mercury, Nickel, Selenium, Silver and Zinc) that can be discharged to inland and coastal waters of Texas.

The mean concentration for drilling fluids metals from the three data sets were then compared to the Texas Hazardous Metals Rule effluent

limitations. The mean concentration of all metals present in the analyzed muds (both in the whole mud effluent phase and the suspended particulate phase) were present in concentrations greater than that permitted by State. Table 11 shows the relationship of metals concentrations found in the analyzed mud samples v.s. limitations found in the Texas Hazardous Metals Rule.

b. Characterization of Drilling Fluids Discharges for Assessing Compliance with Water Quality Criteria and Standards. Drilling fluid discharges have been characterized by three data sets for metals and organics content. The muds analyzed adequately reflect mud systems used in the Gulf of Mexico. The first set of analytical data for metals is from the eight generic drilling muds (CENTEC, 1984). The second metals data set is based on analyses performed on 11 used muds supplied to EPA's Gulf Breeze Laboratory by PESA (SAIC, 1984). The third metals data set is composed of 66 samples analyzed as part of the DPMP under the NPDES general permit for the Gulf of Mexico OCS (EPA, 1987). These data sets were combined to yield weighted average mean values and weighted average upper 95th percentile values for all of the metals reported. Estimated metal levels in the suspended particulate phase (SPP) and liquid phase (LP) were adjusted for partitioning and leachability characteristics on the basis of PESA mud data and barite leaching data (Trefry, 1984). Values ranging from 1.5% to 52% of whole mud metal values were used for the SPP and from 0.044% to 2.4% of whole mud metal values were used for the LP phase.

The mean and upper 95% confidence limit concentrations for drilling fluid metals were compared to state water quality standards and to marine water quality criteria, including health criteria for excess cancer risk of 10^{-6} based on fish consumption only. Parameters that only had Lowest Observed Effect Levels (LOELs) instead of criteria were multiplied by safety factors to estimate no-effect levels. Safety factors were 0.05 for persistent toxics and 0.01 for bioaccumulative toxics. Those analyte values higher than criteria values were divided by the criteria to determine the number of dilutions or dispersions needed to comply with water quality criteria. Dilutions required were calculated for drilling fluid parameters based on suspended particulate phase values or liquid phase values; dispersions required were calculated for parameters based on whole mud values.

c. Mixing Zones and Estimated Dilution/Dispersion. Under Texas' implementation policy for their new water quality standards, mixing zones vary depending upon the type of water body into which the effluent is being discharged. For streams and rivers the mixing zone length will be 300 feet downstream from the discharge point and 100 feet upstream from the discharge point. ZIDs will normally be no more that 20% of the mixing zone lengths in the upstream and downstream directions. Mixing zones for discharges into lakes and reservoirs will be expressed in terms of a maximum radius (typically 100 feet) in all directions from the discharge point. ZIDs will be no more than 25% of the mixing zone radius. Mixing zones for discharges into bays, estuaries and tidal rivers will be expressed in the permit in terms of a maximum radius (typically 200 feet) in all directions from the discharge point. ZIDs will be no more than 25% of the mixing zone radius or 50 feet. Mixing zone size and shape can be varied in permits as necessary to account for differences in local geometry, effluent flow, tidal flows, ecological sensitivity and zone of passage concerns. In addition to the above conditions the following guidance applies to Texas mixing zones. Mixing zones shall not overlap. Mixing zones will not encompass an intake for a domestic drinking water supply and chronic water quality criteria do not apply within a mixing zone.

The mixing zone established to assess compliance with Texas standards was 200 feet. Metal concentrations from the drilling fluid data base was modelled to assure that the no chronic toxicity at the edge of the mixing zone state requirement would be met. In addition, the state allows a 50 foot ZID (zone of initial dilution) to be exempt from the acute numerical standards. Metal concentrations in the drilling fluid data set were modelled to determine their concentrations at the 50 foot ZID to determine if acute toxicity would be present within the mixing zone. The Region considers the modelling to be valid for discharges to the coastal waters (bays and estuaries) covered under this draft permit.

The short-term fate of drilling fluids was assessed using EPA's 2-Dimensional Drilling Fluid Model (EPA 2-D) to address the different transport processes relevant to drilling fluids—dispersion and dilution. Dispersion is defined here as the reduction in suspended solids concentration due to physical transport processes, including gravitational settling. Dispersion is linked to "whole mud" properties for the purposes of assessing potential impact. In contrast, dilution is defined here as the reduction in soluble component concentrations due to physical transport processes. Dilution is linked either to suspended particulate phase characteristics or to liquid phase characteristics of drilling fluids. These phase distinctions are important because toxicologically important characteristics correlate better with some phases than others (i.e., are transported preferentially with or in certain drilling fluid phases relative to others).

The presently available models that analyze the fate of drilling muds have not been designed to deal with the interaction of the plume with the ocean floor. In many cases this does not present a problem. However, there are large areas where drilling is expected to be conducted in water less than 5 meters deep. EPA Region 10 has developed a method (the EPA 2-D Model) for evaluating the dispersion of drilling mud discharges in shallow water (Yearsly, 1984). This model has been used to assess dispersion in shallow water areas of the Gulf of Mexico.

The EPA 2-D model is based on the assumption that the discharged material is completely mixed throughout the water column. This assumption is more valid for discharges in shallow water than deeper water. In a previous study (Tetra Tech, 1984), model results obtained by the EPA 2-D model were more conservative than those obtained by the OOC model for shallow water discharges. However, the EPA 2-D model, at greater depths, will become less and less conservative. Model predictions using appropriate estimates of input parameters compared favorably with available field data from the Gulf of Mexico, demonstrating the EPA model to be a reasonable modeling tool.

Parameters used for all model runs in this current analysis were obtained from observations taken from the Gulf of Mexico. Two discharge rates, 100 bbl/hr and 1000 bbl/hr, were selected to represent reasonable upper and lower bounds of drilling mud discharge rates in these analyses. Source strength was calculated using discharge rates and total suspended solids (TSS) concentrations observed in Gulf of Mexico muds. The estimated bulk density of the model drilling fluid was based on value of 17.4 pounds per gallon. (This sample was analyzed by Exxon Production Research Co. and reported in Brandsma *et al.*, 1984). Settling velocities and compositions of drilling mud used in all model runs are those used in Yearsly (1984).

The background concentration is assumed to be zero in all model runs. The eddy diffusion coefficient is obtained following the method of Fischer et al. (1979), and the value of 0.2 m^2/sec used for all model runs. Average surface current speeds for near shore Texas and Louisiana were obtained from NOAA, 1985. *Gulf of Mexico Coastal and Oceanic Zones Strategic Assessment: Data Atlas.* The surface current speeds for Texas and Louisiana are 8 cm/sec. and 10 cm/sec. respectively. A 5 cm/sec. depth-averaged current speed was used for all model runs.

A single depth scenario, 2 meters was selected for this analysis and represents the lower limit of the model. The results presented represent a discharge for only 1 hour and depict total water column concentration (mg/l effluent solids and liquids in the water column). Model results using the aforementioned input parameters were as follows. At 100 bbl/hr, available dispersions at the ZID were 2,373 and 10,733 at the edge of the mixing zone. At 1,000 bbl/hr, available dispersions were 273 at the ZID and were 1,073 at the edge of the mixing zone.

D. Best Management Practices

1. Dispersants, Surfactants, and Detergents

The facility operator is required to minimize the discharge of dispersants, surfactants, and detergents except as necessary to comply with the safety requirements of the Occupational Safety and Health Administration and the Minerals Management Service. This restriction applies to tank cleaning and other operations which do not directly involve the safety of workers. This restriction is proposed because detergents disperse and emulsify oil, thereby increasing toxicity and making the detection of a discharge of oil more difficult. These limitations have been established pursuant to NPDES permit regulations at 40 CFR 122.44(k) (Best Management Practices).

2. Halogenated Phenol Compounds

There shall be no discharge of halogenated phenol compounds as a part of any waste stream authorized in this permit. The class of halogenated phenol compounds used primarily as biocides includes toxic pollutants which can be reduced through product substitution. The discharge prohibition of this compound is based on a Minerals Management Service requirement (published at 44 FR 39031, July 3, 1979), and has been included in all Gulf of Mexico oil and gas general permits.

3. Priority Pollutants

For well treatment fluids, completion fluids, and workover fluids, the discharge of priority pollutants is prohibited, except in trace amounts. The discharge of these toxic pollutants can be reduced through product substitution. This is the same permit condition as found in the OCS BAT/BCT general permit.

E. Monitoring and Recordkeeping (Section 308)

Monitoring. Monthly volume estimates are required for deck drainage, formation test fluids and well treatment, completion, and workover fluids. Monthly flow estimates are required for sanitary waste. Discharge Monitoring Reports must be submitted annually. A chemical inventory of all materials added and circulated down the well must be maintained and all records retained for three years. Inventory data for effluents must be recorded and maintained, on a well specific basis, upon completion of each well if such effluents are discharged at any time in the drilling or completion of the well.

1. Formation Test Fluids

Volume. Once per month, an estimate must be recorded for the average discharge volume.

2. Well Treatment Fluids, Completion Fluids, Workover Fluids

Volume. Once per month, an estimate must be recorded for the average discharge volume.

Priority Pollutants. For well treatment fluids, completion fluids, and workover fluids, the discharge of priority pollutants is prohibited, except in trace amounts. Information on the specific chemical composition of any additives containing priority pollutants must be recorded.

3. Treated Wastewater From Drilling Fluid Dewatering Activities

Volume. Once per month, an estimate must be recorded for the average discharge volume.

4. Deck Drainage

Volume. An estimate of the monthly total discharge (bbl) must be recorded.

5. Sanitary Waste

Flow. Once per month, the average flow (MGD) must be estimated and recorded for the flow of sanitary wastes.

F. Miscellaneous Requirements

Rubbish, Trash, and Other Refuse. The discharge of any solid material not authorized in the permit (as described above) is prohibited (See section 402(a)(1)). This condition includes unopened or partially used sacks of drilling fluids additives, portland cement, or other chemicals. This is the same condition as established in the OCS general permit for oil and gas operations in the Gulf of Mexico.

Domestic Waste. This permit follows the limitations set out by the U.S. Coast Guard in their proposed rulemaking implementing Annex V of MARPOL 73/78 for domestic waste disposal from all fixed or floating offshore platforms and associated vessels engaged in exploration or exploitation of seabed mineral resources. These limitations, as specified by Congress (33 U.S.C. 1901, The Act to Prevent Pollution from Ships), apply to all navigable waters of the United States. Therefore, these limitations would apply to all waterbodies in the coastal permit area.

This permit prohibits the discharge of "garbage" including food wastes, comminuted or not, within the permit area. Graywater, drainage from dishwater, shower, laundry, bath, and washbasins are not considered garbage within the meaning of Annex V. Incineration ash and clinkers are also prohibited from discharge within the permit area. (See Interim Final Regulations Implementing Annex V of MARPOL 73/78, 54 FR 18384, Friday, April 28, 1989.)

References

API. 1987. Oil and Gas Industry Exploration and Production Wastes. Eastern Research Group (ERT) Inc., July 1987.

Ayers, R.C., Jr. 1981. Fate and Effects of Drilling Discharges in the Marine Environment. Proposed North Atlantic OCS Oil and Gas Lease Sale 52. Bureau of Land Management, U.S. Department of the Interior.

Brandt, L.K. 1973. Remarks on Fine Screen Shakers. *In:* Proceeding of a Rotary Drilling Conference of IADC, Houston, Texas, March 1973.

Cagle, W.S. 1987. Solids Control Update, Part 1. Shale Shakers and Centrifugal Pumps. Petroleum Engineer International. July 1987. pp 37–42.

Cagle, W.S. 1987. Solids Control Update. Part 2. Degassers, Hydrocyclones, and Mud Cleaners. Petroleum Engineer International. August 1987. pp 32–36.

Cagle, W.S. 1987. Solids Control Update, Part 3. Centrifuges. Petroleum Engineer International. September 1987. pp 46–50.

Cagle, W.S. 1987. Solids Control Update, Part 4. Auxiliary Equipment. Petroleum Engineer International. October 1987. pp 41–45.

Canter, L.W. 1985. Drilling Waste Disposal: environmental problems and issues. *In:* Proceedings of a National Conference on Disposal of Drilling Wastes. Univ. of Okla. Environmental and Ground Water Institute.

Churchwell, R.C. 1981. Closed-loop Systems Control Mud Solids. Petroleum Engineer International. September 1981. pp 132–140.

EPA. 1986. Wastes from the Exploration, Development and Production of Crude Oil, Natural Gas and Geothermal Energy. Interim Technical Report. EPA/530–SW–86–051. October 1986.

Froment, T.D., Rodt., G.M., Houwen, O.H. and Titreville, B. 1986. A drilling Contractor Tests Solids Control Equipment. IADC/SPE Drilling Conference, Dallas, Texas 1986.

Hanson et al. 1986. A review of Mud and Cuttings Disposal for Offshore and Land based Operations. *In:* Proceedings of a National Conference on Drilling Muds. Univ. of Okla. Environmental and Ground Water Institute.

Hoberock, L.L. and Williams, M.P. 1982. Solids Control for the Man on the Rig, Part 1. Solids Removal, Economics and Shale Shaker Selection. Petroleum Engineer International. October 1982. pp 58–84.

IMCO Services. 1978. Applied Mud Technology Manual. Sixth Edition. A Division of Halliburton Company, Houston, Texas.

Leyendecker, E.A. 1986. Planning a Drilling Fluid Program. *In:* Proceedings of a National Conference on Drilling Muds. Univ. of Okla. Environmental and Groundwater Institute.

Moore, L.P. 1974. Drilling Practices Manual. The Petroleum Publishing Company, Tulsa, Okla. 448 pp.

Neiderhardt, D. 1985. Rig-site system allows water reuse, cuts cleanup costs. Oil and Gas Jour. March 4, 1985. pp 88–94.

Ormsby, G.S. 1973. Why your removal system wont remove. *In:* Proceeding of a Rotary Drilling Conference of IADC, Houston, Texas, March 1973.

Ormsby, G.S. 1974. Drilling Fluids Solids Removal. *In:* Moore. L.P., Drilling Practices Manual. The Petroleum Publishing Company, Tulsa, Okla. 448 pp.

Rafferty, J.H. 1985. Recommended Practices for the Reduction of Drill Site Wastes. *In:* Proceedings of a National Conference on the Disposal of Drilling Wastes. Univ. of Okla. Environmental and Ground Water Institute.

Robinson, L.H. 1988. Proper Solids Control—Key to Good Drilling Practices. Petroleum Engineer International. June 1988. pp 42–43.

Rogers, W.F., et al. eds. 1969. Principles of Drilling Fluid Control. Twelfth Edition. University of Texas at Austin, Austin, Texas, 215 pp.

SWACO Geolograph. 1989. Solids Control Manual. Unpublished.

Young, G.A. 1987. An Experimental Investigation of the Performance of a three inch Hydrocyclone. SPE/IADC Drilling Technology Conference, New Orleans March 1987.

TABLE 1.—DISCHARGE, PERMIT CONDITION AND STATUTORY BASIS

Discharge and permit condition	Statutory basis
Drilling muds:	
No discharge	BAT TWQS.
Drill cuttings:	
No discharge	BAT TWQS.
Treated wastewater from dewatering activities:	
No free oil	TX RR Comm. Rule 8.
Oil and grease: (15 mg/l daily max.).	BCT TX RR Comm.
Total suspended solids (50 mg/l).	BCT TX RR Comm.
Total dissolved solids (3,000 mg/l max.).	TX RR Comm.
Chemical oxygen demand (200 mg/l).	TX RR Comm.
pH (6.0–9.0)	BCT TX RR Comm.

TABLE 1.—DISCHARGE, PERMIT CONDITION AND STATUTORY BASIS—Continued

Discharge and permit condition	Statutory basis
Chlorides: (500 mg/l inland waters) (1,000 mg/l tidally influenced waters).	TX RR Comm.
Hazardous metals (no discharge).	TX RR Comm. TWQS.
Monitor volume	Section 308.
Deck drainage:	
No free oil	BCT TX RR Comm.
Monitor volume	Section 308.
Formation test fluid:	
No free oil	BCT TX RR Comm.
pH (6.0–9.0)	BCT
Monitor volume	Section 308.
Well treatment, completion and workover fluids:	
Priority pollutants (no discharge).	BMP.
No free oil	BCT TX RR Comm.
pH (6.0–9.0)	BCT.
Monitor volume	Section 308.
Sanitary waste:	
No floating solids	BCT.
Biological oxygen demand (45 mg/l).	BCT.
Total suspended solids (45 mg/l).	BCT.
Fecal coliform (200/100 ml)	BCT
Monitor flow	Section 308.
Domestic waste:	
No floating solids	BCT.
No discharge (food waste & incineration ash).	MARPOL 73/78 Annex V.
Miscellaneous discharges:	
No free oil	BCT TX RR Comm.
All discharges:	
No halogenated phenols	BMP.
No floating solids or foam	BCT.
No discharge of rubbish, trash or refuse.	Section 402(a)(1).
Minimize use of surfactants, dispersants and detergents.	BMP.

TABLE 2.—MODEL WELL INPUT PARAMETERS

Engineering Data:			
Drilled Interval (ft)	800	5,400	15,000
Number of Days	3	8	39
Bit Size (in)	17.5	12.3	7.9
Casing Depth (ft)	100	800	5,400
Avg. Hole Washout (%)	40	30	15
Avg. Mud Wt. (lb/gal)	8.6	8.9	9.1
Low Grav. Solids (%)	4.0	4.0	5.0
Pit Volume (bbls)	700	700	700
Calc. Hole Volume (bbls)	372.2	1,162.8	1,525.8
Total Fluid Volume (bbls)	1,072.2	1,862.8	2,225.8
Drill Solids Generated (bbls)	303.3	793.6	605.5
Drilling expenditures:			
Number of Days on Location	50		
Total Well Cost (AFE)	$1,680,000		
Drilling Barge (fuel & marine pkg)	420,000	$8400/day	(25%)
Drilling Intangibles (mud, bits, etc)	537,600		(32%)
Tubulars (casing, well head, etc)	722,400		(43%)
Disposal Expenditures:			
Shale Barge Rental ($/day)		$180	
Tug Rental ($/day)		1,400	
Mud & Cuttings Disposal & Trans. ($/bbl)		10	

TABLE 3—ECONOMIC SCENARIO 1

Engineering Data:				
Drilled Interval (ft)	800	5,400	15,000	Well
Drill Solids in Mud System (bbls)	303.3	793.6	605.5	.....
Equipment Removal (bbls)	115.3	301.6	230.1	.....
Liquids lost w/Solids (bbls)	288.2	753.9	575.2	.....
Solids Remaining in Mud System (bbls)	188.1	492.0	375.4	.....
Dilution Needed (bbls)	3,761.3	9,840.6	7,507.9	.....
Cuttings/Sludge Generated (bbls)	404	1,055	805	2,264
Liquid Mud Generated (bbls)	3,761	9,841	7,508	21,110

Cost Analysis:	
Vol. of Fluids for Disposal (23,374 bbls @ $10/bbl)	$233,740
Based on 38 percent equipment efficiency.	
Barge Rental (2 barges @ $180/day for 50 days)	18,000
Average shale barge capacity assumed to be 1,400 bbls.	
Tug Rental (17 hauls @ $1,500)	25,500
Does not include cost saving due to long term contracts nor does it assume that the rig tug could be used to haul the shale barges to collection terminal.	
Retro-fitting Costs (rig equipment)	0
No additional cost when using rig equipment.	
Solids Equipment Rental ($200/day for 50 days)	10,000
Total Expenditure	287,240

TABLE 4—ECONOMIC SCENARIO 2

Engineering Data:				
Drilled Interval (ft)	800	5,400	15,000	Well.
Drill Solids in Mud System (bbls)	303.3	793.6	605.5	.....
Equipment Removal (bbls)	188.1	492.0	375.4	.....
Liquids lost w/Solids (bbls)	400.1	1046.9	798.7	.....
Solids Remaining in Mud System (bbls)	115.3	301.6	230.1	.....
Dilution Needed (bbls)	2,305.3	6,031.3	4,601.6	.....
Cuttings/Sludge Generated (bbls)	588	1,539	1,174	3,301
Liquid Mud Generated (bbls)	2,305	6,031	4,602	12,938

Cost Analysis:	
Vol. of Fluids for Disposal (16,239 bbls @ $10/bbl)	$162,390
Based on 62 percent equipment efficiency.	
Barge Rental (2 barges @ $180/day for 50 days)	18,000
Average shale barge capacity assumed to be 1,400 bbls.	
Tug Rental (12 hauls @ $1,500)	18,000
Does not include cost saving due to long term contracts nor does it assume that the rig tug could be used to haul the shale barges to collection terminal.	
Retro-fitting Costs (intermediate equipment)	35,000
Cost includes a cantilevered configuration over drill barge and re-plumbing mud flow lines.	
Solids Equipment Rental ($600/day for 50 days)	30,000
Subtotal	263,390
Drilling Fluid Savings	(14,505)
Savings to operator based on equipment efficiency and cost of drilling fluid.	
Total Expenditure	248,885

TABLE 5— ECONOMIC SCENARIO 3

Engineering Data:				
Drilled Interval (ft)	800	5,400	15,000	Well.
Drill Solids in Mud System (bbls)	303.3	793.6	605.5	.....
Equipment Removal (bbls)	273.0	714.2	544.9	.....
Liquids lost w/Solids (bbls)	420.0	1,098.8	838.3	.....
Solids Remaining in Mud System (bbls)	30.3	79.4	60.5	.....
Dilution Needed (bbls)	606.7	1,587.2	1,210.9	.....
Cuttings/Sludge Generated (bbls)	693	1,813	1,383	3,889
Liquid Mud Generated (bbls)	607	1,587	1,211	3,405

Cost Analysis:	
Vol. of Fluids for Disposal (7,294 bbls @ $10/bbl)	$72,940
Based on 90 percent equipment efficiency.	
Barge Rental (2 barges @ $180/day for 50 days)	18,000
Average shale barge capacity assumed to be 1,400 bbls.	
Tug Rental (6 hauls @ $1,500)	9,000
Does not include cost saving due to long term contracts nor does it assume that the rig tug could be used to haul the shale barges to collection terminal.	
Retro-fitting Costs (closed cycle system)	35,000

Cost includes a cantilevered configuration over drill barge and re-plumbing mud flow lines.	
Solids Equipment Rental ($1600/day for 50 days)	80,000
Subtotal	$214,940
Drilling Fluid Savings	(31,500)
Savings to operator based on equipment efficiency and cost of drilling fluid.	
Total Expenditure	183,440

TABLE 6—SUMMARY OF DRILLING SCENARIO'S 1, 2, & 3

	Scenario 1	Scenario 2	Scenario 3
Equipment Efficiency (%)	38	62	90
Well Depth (ft)	15,000	15,000	15,000
Equipment Day Rate	$200	$600	$1,600
Days to Drill Well	50	50	50
Equipment Cost	$10,000	$30,000	$80,000
Drilling mud—Haul off (bbls)	21,110	12,938	3,405
Drill cuttings—Haul off (bbls)	2,264	3,301	3,889
Total Volume for Disposal (bbls)	23,374	16,239	7,294
Average Haul off Bbls/day	467	325	146
Haul off Bbls/ft	1.56	1.08	.49
Disposal Cost/ft (@ $10/bbl)	$15.58	$10.83	$4.87
Solids Equipment Cost/ft	$0.67	$2.00	$5.33
Misc. Costs/ft (retrofitting, tug and barge rentals)	$2.90	$4.73	$4.13
Mud Savings $/ft drilled	($0.00)	($0.97)	($2.10)
Total Cost/ft	$19.15	$16.59	$12.23
Total Expenditure	$287,250	$248,850	$183,450
Total Well Cost (AFE)	$1,680,000	$1,680,000	$1,680,000
Percent of AFE	17.1	14.8	10.9

TABLE 7.—ESTIMATED DRILLING FLUID METAL CONCENTRATIONS IN THE WHOLE MUD EFFLUENT PHASE (ug/l)

Data set	Eight generic muds mean	PESA muds mean	DPMP muds mean	Average data set	
				Mean	U95
Antimony			3,590	3,590	4,940
Arsenic	6,580	11,100		12,800	20,100
Beryllium			32,300	32,300	651,000
Cadmium	315	2,720	4,520	3,310	6,060
Chromium	539,000	400,000	368,000	408,000	549,000
Copper	37,100	319,000	39,600	99,400	233,000
Lead	10,200	99,700	54,700	55,700	73,800
Mercury	309		540	482	670
Nickel	2,900		14,400	11,500	16,500
Selenium	820		450	542	717
Silver	315		647	564	627
Thallium	112		380	313	387
Zinc	46,600	461,000	162,000	204,000	294,000

TABLE 8.—TEXAS CRITERIA—DILUTIONS/DISPERSIONS REQUIRED FOR METALS IN DRILLING FLUIDS

Metal		Criteria (µg/1)	Effluent content	
			Mean	U95
Arsenic	A	149	85.9	135
	C	78	164	258
	M	100	N	N
Barium	A			
	C			
	M	1,000		
Cadmium	A	45.62	72.5	133
	C	10.02	330	605
	M	100	N	N
Chromium (Hex)	A	1,100	371	499
	C	50	8,160	10,980
	M	500 (Tot.)	N	N
Copper	A	4.37	22,756	53,318
	C	4.37	22,756	53,318
	M	500	N	N
Lead	A	140	398	527
	C	5.6	9,946	13,178

TABLE 8.—TEXAS CRITERIA—DILUTIONS/DISPERSIONS REQUIRED FOR METALS IN DRILLING FLUIDS—Continued

Metal		Criteria (µg/1)	Effluent content	
			Mean	U95
	M	500	N	N
Mercury	A	2.1	229	319
	C	0.025	19,280	26,800
	M	5	N	N
Nickel	A	119	96.6	139
	C	13.2	871	1,250
	M	1,000	N	N
Selenium	A	410	1.32	1.75
	C	54	10.0	13.3
	M	100	N	N
Silver	A	2.3	245	273
	C			
	M	50	N	N
Zinc	A	98	2,082	3,000
	C	89	2,292	3,303
	M	1,000	N	N

A: Acute marine criteria (TX)—to be met at ZID (50 feet).

C: Chronic marine criteria (TX—to be met at edge of mixing zone (200 feet).

M: Hazardous metals criteria (TX).

N: Indicates that the effluent does not meet the criteria.

Y: Indicates that the effluent does meet the criteria.

TABLE 9.—DILUTIONS / DISPERSIONS NEEDED FOR METALS FAILING TO MEET CRITERIA FOR 50 AND 200 FOOT MIXING AT 100 BBL/HR

Metal	Effluent	
	Mean	U95
Arsenic		
H (EPA)	731,428	1,148,571
Beryllium		
H (EPA)	276,068	5,564,103
Copper		
A/C (EPA)	34,276	80,345
A/C (TX)*	22,746	53,318

TABLE 9.—DILUTIONS / DISPERSIONS NEEDED FOR METALS FAILING TO MEET CRITERIA FOR 50 AND 200 FOOT MIXING AT 100 BBL/HR—Continued

Metal	Effluent	
	Mean	U95
Mercury		
C (EPA)	19,280	26,800
C (TX)*	19,280	26,800
Lead		
C (EPA)		13,178
C (TX)*		13,178
Chromium		
C (EPA)		10,980
C (TX)*		10,980

*Only Texas criteria used to establish permit conditions

Dilutions available at 100 bbl/hr: 50 feet=2,373 200 feet=10,733.

Table 10.—DILUTIONS/DISPERSIONS NEEDED FOR METALS FAILING TO MEET CRITERIA FOR 50 AND 200 FOOT MIXING AT 1,000 BBL/HR

Metal	Effluent	
	Mean	U95
Arsenic		
H (EPA)	731,428	1,148,571
Beryllium		
H (EPA)	276,068	5,564,103
Copper		
A/C (EPA)	34,276	80,345
A/C (TX)	22,746	53,318
Mercury		
C (EPA)	19,280	26,800
C (TX)	19,280	26,800
Lead		
C (EPA)	9,946	13,178
C (TX)	9,946	13,178
Chromium		
C (EPA)	8,160	10,980
C (TX)	8,160	10,980
Mercury		
H (EPA)	3,301	4,589
Zinc		
C (EPA)	2,372	3,419
C (TX)	2,292	3,303

Table 10.—DILUTIONS/DISPERSIONS NEEDED FOR METALS FAILING TO MEET CRITERIA FOR 50 AND 200 FOOT MIXING AT 1,000 BBL/HR—Continued

Metal	Effluent	
	Mean	U95
A (EPA)	2,147	3,095
A (TX)	2,082	3,000
Nickel		
C (EPA)	1,385	1,988
C (TX)		1,250
Lead		
A (EPA)	398	527
A (TX)	398	527
Chromium		
A (EPA)	371	499
A (TX)	371	499
Mercury		
A (EPA)		319
A (TX)		319
Silver		
A (EPA)	245	273
A (TX)	245	273
Arsenic		
A (EPA)		291

Dilutions available at 1,000 bbl/hr: 50 feet=237 200 feet=1,073.

TABLE 11.—ESTIMATED DRILLING FLUID METALS CONCENTRATIONS FOR WHOLE MUD VS ALLOWABLE DAILY AVERAGE CONCENTRATIONS FOR EFFLUENTS (mg/l)

Metals rule	Inland	Tidal	8 Generic muds	PESA	DPMP	Mean
Arsenic	0.1	0.1	6.58		14.86	12.8
Cadmium	.05	.1	.315	2.72	4.52	3.1
Chromium	.5	.5	539	400	368	408
Copper	.5	.5		319	39.6	99.4
Lead	.5	.5	10.2	99.7	54.7	55.7
Mercury	.005	.005	.309		.54	.482
Nickel	1.0	1.0	2.9		14.4	11.5
Selenium	.05	.1	.82		.45	.542
Silver	.05	.05	.315		.647	.564
Zinc	1.0	1.0	46.6	461	162	204

GENERAL PERMIT AUTHORIZATION TO DISCHARGE UNDER THE NATIONAL POLLUTANT DISCHARGE ELIMINATION SYSTEM IN THE COASTAL WATERS OF TEXAS PERMIT NO. TXG330000

In compliance with the provisions of the Federal Water Pollution Control Act, as amended (33 U.S.C. 1251 *et seq:* the "Act"), the following discharges are authorized from coastal oil and gas facilities (defined in 40 CFR part 435, subpart D) to receiving waters, described below (encompassing the coastal waters of Texas) in accordance with effluent limitations, monitoring requirements and other conditions set forth in Parts I, II, III, and IV thereof:

Drilling Fluids
Drill Cuttings
Deck Drainage
Sanitary Wastes
Domestic Wastes
Desalinization Unit Discharge
Diatomaceous Earth Filter Media
Excess Cement Slurry
Uncontaminated Ballast/Bilge Water
Boiler Blowdown
Blowout Preventer Control Fluid
Well Treatment Fluids
Workover Fluids
Completion Fluids
Formation Test Fluids

Clean Water Act section 502.

The coastal permit area as described in the regulations is broad by definition and includes all rivers, streams, lakes, bays, estuaries and adjacent wetlands that occur inland of inner boundary of the territorial seas. The coastal subcategory also includes the geographic area along the coast of Texas and Louisiana (Chapman line area) which was originally defined as coastal in EPA's 1976 Interim Final Regulations for the onshore subcategory (See Suspension of Regulations, 47 FR 31554, July 21, 1982). A facility is considered to be covered under the proposed general permit if the location of the wellhead is within the described permit area.

This permit does not authorize discharge from "new sources" as defined in 40 CFR 122.2.

This permit shall become effective on [_____].

This permit and the authorization to discharge shall expire at midnight, [5 years from date of issuance].

Signed this [_____] day of [_____].

Myron O. Knudson, P.E.,

Director, Water Management Division, EPA Region 6.

Treated Wastewater from Dewatered Drilling Fluids/Cuttings
Muds, Cuttings, and Cement at the Seafloor
Uncontaminated Seawater
Uncontaminated Freshwater

This permit authorizes discharges to the coastal waters of Texas from oil and gas facilities engaged in production,

field exploration, drilling, well completion, and well treatment operations. Produced water, produced sand and source water and sand discharges are excluded from coverage under this general permit, but will however, be regulated under a separate general coastal permit.

For the purposes of this NPDES general permit, the 40 CFR part 435 subpart D, Oil and Gas Extraction Point Source Subcategory definition of "coastal" shall describe the area authorized for coverage under this permit, including the geographic area (land and water areas) suspended from the onshore subcategory described in 40 CFR part 435 subpart C. The guidelines definition of coastal used here, is described as "any body of water landward of the territorial seas or any wetlands adjacent to such waters" (40 CFR 435.41(e). The term wetlands shall mean "those surface areas which are inundated or saturated by surface or ground water at a frequency and duration sufficient to support, and that under normal circumstances do support, a prevalence of vegetation typically adapted for life in saturated soil conditions. Wetlands generally include, swamps, marshes, bogs and similar areas" (40 CFR 435.41(f). Territorial seas refers to "the belt of the seas measured from the line of ordinary low water along that portion of the coast which is direct contact with the open sea and the line marking the seaward limit of inland waters, and extending seaward a distance of three miles."

Permit No. TXG330000

Part I

Section A. General Permit Coverage

1. Intent to be Covered. Written notification of intent to be covered, including the legal name and address of the operator, the lease block number assigned by the Texas General Land Office or, if none, the name commonly assigned to the lease area, and the type of facility to be covered, and the water depth at which it is located, shall be submitted:

(a) By operators in lease blocks that are located within the geographic scope of this permit, within 45 days of the effective date of this permit.

Note: Operators must request coverage under this general permit or have an effective individual permit.

(b) By operators of leases obtained subsequent to the effective date of this permit fourteen days prior to the commencement of discharge.

2. Termination of Operations. Lease block operators shall notify the Regional Administrator within 60 days after the permanent termination of discharges from their facilities. In addition, lease block operators shall notify the Regional Administrator within 30 days of any transfer of ownership.

Section B. NPDES Individual Versus General Permit Applicability

1. The Regional Administrator May Require Application for an Individual NPDES Permit. The Regional Administrator may require any person authorized by this permit to apply for and obtain an individual NPDES permit when:

(a) The discharge(s) is a significant contributor of pollution;

(b) The discharger is not in compliance with the conditions of this permit;

(c) A change has occurred in the availability of the demonstrated technology or practices for the control or abatement of pollutants applicable to the point sources;

(d) Effluent limitation guidelines are promulgated for point sources covered by this permit;

(e) A Water Quality Management Plan containing requirements applicable to such point source is approved;

(f) The point source(s) covered by this permit no longer:

(1) Involve the same or substantially similar types of operations;

(2) Discharge the same types of wastes;

(3) Require the same effluent limitations or operating conditions;

(4) Require the same or similar monitoring; or

(5) In the opinion of the Regional Administrator, are more appropriately controlled under an individual permit than under a general permit.

The Regional Administrator may require any operator authorized by this permit to apply for an individual NPDES permit only if the operator has been notified in writing that a permit application is required.

2. An Individual NPDES Permit May Be Requested. (a) Any operator authorized by this permit may request to be excluded from the coverage of this general permit by applying for an individual permit. The operator shall submit an application together with the reasons supporting the request to the Regional Administrator no later than September 5, 1990.

(b) When an individual NPDES permit is issued to an operator otherwise subject to this general permit, the applicability of this permit to the owner or operator is automatically terminated on the effective date of the individual permit.

3. General Permit Coverage May Be Requested. A source excluded from coverage under this general permit solely because it already has an individual permit may request that its individual permit be revoked, and that it be covered by this general permit. Upon revocation of the individual permit, this general permit shall apply to the source after the notification of intent to be covered is filed (see A.1. above).

Part II

Section A. Effluent Limitations and Monitoring Requirements

Specific effluent limitations and monitoring requirements are discussed below. They are organized by the type of discharge in the text, and by discharge type, effluent limitation and monitoring requirements in Table 1.

1. Drilling Fluids—(a) Applicability. Permit conditions apply to all drilling fluids (muds) that are discharged, including fluids adhering to cuttings.

(b) Prohibitions. This permit prohibits the discharge of all drilling fluids.

2. Drill Cuttings—

Special Note: The permit prohibitions and limitations that apply to drilling fluids also apply to drilling fluids that adhere to drill cuttings. Any permit condition that applies to the drilling fluid system, therefore, also applies to cuttings discharges.

(a) Prohibitions.

This permit prohibits the discharge of drill cuttings.

3. Treated Wastewater from Drilling Fluids/Cuttings, Dewatering Activities and Pit Closure Activities

(a) Applicability. Treated water from reserve pits may be discharged after the contents of the pits have been flocculated or otherwise chemically or mechanically treated to meet the following limitations.

(b) Limitations—Free Oil. Discharges containing free oil are prohibited as determined by a visual sheen on the surface of the receiving water. Monitoring must be accomplished once per day, when discharging during conditions when an observation of a sheen is possible. The number of days a sheen is detected must be recorded.

[Exception] Treated wastewater may be discharged at any time if the operator uses the static sheen method for detecting free oil.

Oil and Grease. Treated Wastewater must meet a 15 mg/l daily maximum limitation.

Total Suspended Solids. Treated wastewater shall not exceed 50 mg/l as a daily maximum.

Total Dissolved Solids. Treated wastewater shall not exceed 3,000 mg/l as a daily maximum.

[Exception] Total dissolved solids (TDS) concentration may exceed 3,000 mg/l in tidally influenced watercourses (downstream of the upper limit of saltwater intrusion) if the TDS concentration of the treated reserve pit effluent does not exceed the TDS concentration of the receiving water at the point of discharge at the time of discharge.

Chemical Oxygen Demand. Treated wastewater shall not exceed 200 mg/l as a daily maximum.

pH. Discharges of treated wastewater must meet a pH limitation of not less than 6.0 and not greater than 9.0 at the point of discharge.

Chlorides. Treated wastewater shall not exceed 500 mg/l in inland areas and shall not exceed 1,000 mg/l in tidally influenced watercourses.

[Exception] Chloride concentration may exceed 1,000 mg/l in tidally influenced watercourses (downstream of the upper limit of saltwater intrusion) if the chloride concentration of the treated reserve pit effluent does not exceed the chloride concentration of the receiving water at the point of discharge at the time of discharge. Inland regions are defined to be those regions where natural drainage is into any watercourse which is not tidally influenced.

Hazardous Metals. The discharge must not contain concentrations of the substances classified as "hazardous metals" in excess of the levels allowed by the Texas Water Development Board Rules 156.19.15.001-.009 (currently TAC 319.21).

Monitoring. The monitoring frequency for the above limitations are once per day when discharging. However, if the effluent is batch treated and discharged, the monitoring requirements for all effluent characteristics shall be once per discharge event by grab sample.

(c) Other Monitoring—Volume. The volume (bbls) of discharged treated wastewater must be estimated once per day, when discharging. If the effluent is being batch treated and discharged then the estimated volume discharged in barrels must be recorded per discharge event.

4. Deck Drainage—(a) Limitations. Free Oil. Discharges containing free oil are prohibited as determined by a visual sheen on the surface of the receiving water. Monitoring must be accomplished once per day, when discharging during conditions when an observation of a sheen is possible. The number of days a sheen is detected must be recorded.

[Exception] Deck drainage may be discharged at any time if the operator uses the static sheen method for detecting free oil.

(b) Other Monitoring—Volume. Once per month, the total monthly volume (bbl) must be estimated.

5. Formation Test Fluid—(a) Prohibitions. There shall be no discharge of formation test fluids to lakes, rivers, streams, bays and estuaries.

[Exception] Discharges of formation test fluids are allowed to bays and estuaries where no chloride standards have been established by the Texas Water Commission.

(b) Limitations—Free Oil. Discharges containing free oil are prohibited as determined by a visual sheen on the surface of the receiving water. Discharge is authorized only at times when a visual sheen observation is possible. The monitoring frequency is once per discharge event.

[Exception] Formation test fluids may be discharged at any time if the operator uses the static sheen method for detecting free oil.

pH. Discharges of formation test fluid must meet a pH limitation of not less than 6.0 and not greater than 9.0. A grab sample must be taken once per discharge. Any spent acidic test fluids shall be neutralized before discharge such that the pH at the point of discharge meets the limitation.

(c) Other Monitoring—Volume. Once per discharge, the total volume reported as number of barrels sent downhole during testing and the number of barrels discharged shall be estimated and reported once per month.

6. Well Treatment Fluids, Completion Fluids, Workover Fluids—(a) Prohibitions—There shall be no discharge of well completion, treatment or workover fluids to lakes, rivers, streams, bays or estuaries.

[Exception] Discharge of well completion, treatment or workover fluids are allowed to bays and estuaries where no chloride standards have been established by the Texas Water Commission.

Priority (Toxic) Pollutants. For well treatment fluids, completion fluids, and workover fluids, the discharge of priority pollutants (see Appendix A) is prohibited, except in trace amounts. If well completion, treatment or workover fluids are discharged, the permittee is required to certify by letter to the Director of the Water Management Division that the discharge did not contain priority pollutants, except in trace amounts. This letter shall be sent to the same address as the discharge monitoring reports.

Information on the specific chemical composition of additives used in these fluids, and their concentrations in the fluid, must be recorded if priority pollutants are present, in any amount, in these additives.

(b) Limitations—Free Oil. Discharges containing free oil are prohibited as determined by a visual sheen on the surface of the receiving water. Monitoring must be accomplished once per day, when discharging during conditions when an observation of a sheen is possible. The number of days a sheen is detected must be recorded.

[Exception] Well treatment fluids, completion fluids, or workover fluids may be discharged at any time if the operator uses the static sheen method for detecting free oil.

pH. Well treatment, completion and workover fluids must meet a pH limitation of not less than 6.0 and not greater than 9.0 prior to being discharged. Sampling must be accomplished once per day when discharging.

(c) Other Monitoring—Volume. Once per month, the average discharge volume (bbls) must be estimated.

7. Sanitary Waste—(a) Prohibitions. Solids. No floating solids may be discharged.

(b) Limitations—Biological Oxygen Demand (BOD5). Sanitary waste discharges must meet a 45 mg/l daily maximum limitation. A grab sample must be collected and analyzed once per quarter.

Total Suspended Solids. Sanitary waste discharges shall meet a 45 mg/l daily maximum limitation. A grab sample shall be collected and analyzed once per quarter.

Fecal Coliform. Sanitary waste discharges must meet a daily maximum limitation of 200/100 ml for fecal coliform. A grab sample must be taken and analyzed once per quarter.

(c) Other Monitoring

Flow. Once per month, the average flow (million gallons per day; MGD) must be estimated.

8. Domestic Waste—

(a) Prohibitions. Solids. This permit prohibits the discharge of "garbage" including food wastes (comminuted or not), incineration ash and clinkers. Graywater is not considered garbage under this definition.

9. Miscellaneous Discharges: Desalinization Unit Discharge, Blowout Preventer Fluid, Uncontaminated Ballast Water, Uncontaminated Bilge Water, Mud, Cuttings, and Cement at the Seafloor, Uncontaminated Seawater, Uncontaminated Freshwater, Boiler Blowdown, Excess Cement Slurry, Diatomaceous Earth Filter Media—(a) Limitations—Free Oil. Discharges

containing free oil are prohibited as determined by a visual sheen on the surface of the receiving water. Monitoring must be accomplished once per day, when discharging during conditions when an observation of a sheen is possible. The number of days a sheen is detected must be recorded.

[Exception] Miscellaneous discharges may occur at any time if the operator uses the static sheen method for detecting free oil.

10. Other Discharge Conditions—(a) Prohibitions—Halogenated Phenol Compounds. There shall be no discharge of halogenated phenol compounds.

Rubbish, Trash, and Other Refuse. The discharge of any solid material not authorized in the permit (as described above) is prohibited.

(b) Limitations—Floating Solids or Visible Foam. There shall be no discharge of floating solids or visible foam in other than trace amounts.

Surfactants, Dispersants, and Detergents. The discharge of surfactants, dispersants, and detergents used to wash working areas shall be minimized except as necessary to comply with applicable State and Federal safety requirements.

Section B. Other Conditions

1. Samples of Wastes. If requested, the permittee shall provide EPA with a sample of any waste in a manner specified by the Agency.

Part III.

Section A. General Conditions

1. Introduction. In accordance with the provisions of 40 CFR part 122.41, *et seq.*, this permit incorporates by reference all conditions and requirements applicable to NPDES Permits set forth in the Clean Water Act, as amended, (hereinafter known as the "Act") as well as ALL applicable CFR regulations.

2. Duty to Comply. The permittee must comply with all conditions of this permit. Any permit non-compliance constitutes a violation of the Clean Water Act and is grounds for enforcement action or for requiring a permittee to apply for and obtain an individual NPDES permit.

3. Toxic Pollutants. Notwithstanding III.A.5 below, if any toxic effluent standard or prohibition (including any schedule of compliance specified in such effluent standard or prohibition) is promulgated under section 307(a) of the Clean Water Act for a toxic pollutant which is present in the discharge and that standard or prohibition is more stringent than any limitation on the pollutant in this permit, this permit shall be modified or revoked and reissued to conform to the toxic effluent standard or prohibition and the permittee so notified.

The permittee shall comply with effluent standards or prohibitions established under section 307(a) of the Clean Water Act for toxic pollutants within the time provided in the regulations that established those standards or prohibitions, even if the permit has not yet been modified to incorporate the requirement.

4. Duty to Reapply. If the permittee wishes to continue an activity regulated by this permit after the expiration date of this permit, the permittee must submit notice of intent to be covered and must apply for a new permit. Continuation of the expiring permit shall be governed by regulations at 40 CFR 122.6 and any subsequent amendments.

5. Permit Flexibility. This permit may be modified, revoked and reissued, or terminated for cause including, but not limited to, the following (see 40 CFR 122.62–64):

(a) Violation of any terms or conditions of this permit;

(b) Obtaining this permit by misrepresentation or failure to disclose fully all relevant facts;

(c) A change in any condition that requires either a temporary or a permanent reduction or elimination of the authorized discharge; or

(d) A determination that the permitted activity endangers human health or the environment and can only be regulated to acceptable levels by permit modification or termination.

The filing of a request by the permittee for a permit modification, revocation and reissuance, or termination, or a notification of planned changes or anticipated noncompliance, does not stay any permit condition.

This permit shall be modified, or alternatively, revoked and reissued, to comply with any applicable effluent standard or limitation issued or approved under section 301, 304, and 307 of the Clean Water Act, if the effluent standard or limitation so issued or approved:

(a) Contains different conditions or limitations than any in the permit; or

(b) Controls any pollutant not limited in the permit.

The permit as modified or reissued under this paragraph shall also contain any other requirements of the Act then applicable.

6. Property Rights. The issuance of this permit does not convey any property rights of any sort, or any exclusive privileges, nor does it authorize any injury to private property or any invasion of personal rights, nor any infringement of Federal, State, or local laws or regulations.

7. Duty to Provide Information. The permittee shall furnish to the Regional Administrator, within a reasonable time, any information which the Regional Administrator may request to determine whether cause exists for modifying, revoking and reissuing, or terminating this permit, or to determine compliance with this permit. The permittee shall also furnish to the Regional Administrator upon request, copies of records required to be kept by this permit.

8. Civil and Criminal Liability. Except as provided in permit conditions on "Bypassing" and "Upsets" (see III.B.4 and III.B.5), nothing in this permit shall be construed to relieve the permittee from civil or criminal penalties for noncompliance. Any false or misleading misrepresentation or concealment of information required to be reported by the provisions of the permit, the ACT, or applicable CFR regulations which avoids or effectively defeats the regulatory purpose of the permit may subject the permittee to criminal enforcement pursuant to 18 U.S.C. section 1001.

9. Oil and Hazardous Substance Liability. Nothing in this permit shall be construed to preclude the institution of any legal action or relieve the permittee from any responsibilities, liabilities, or penalties to which the permittee is or may be subject under Section 311 of the Clean Water Act.

10. State Laws. Nothing in this permit shall be construed to preclude the institution of any legal action or relieve the permittee from any responsibilities, liabilities, or penalties established pursuant to any applicable State law or regulation under authority preserved by section 510 of the Clean Water Act.

11. Severability. The provisions of this permit are severable, and if any provision of this permit or the application of any provision of this permit to any circumstance is held invalid, the application of such provision to other circumstances, and the remainder of this permit, shall not be affected thereby.

Section B. Operation and Maintenance of Pollution Controls

1. Need to Halt or Reduce not a Defense. It shall not be a defense for a permittee in an enforcement action that it would have been necessary to halt or reduce the permitted activity in order to maintain compliance with the conditions of this permit.

2. Duty to Mitigate. The permittee shall take all reasonable steps to

minimize or prevent any discharge in violation of this permit which has a reasonable likelihood of adversely affecting human health or the environment.

3. Proper Operation and Maintenance. The permittee shall at all times properly operate and maintain all facilities and systems of treatment and control (and related appurtenances) that are installed or used by the permittee to achieve compliance with the conditions of this permit. Proper operation and maintenance also includes adequate laboratory controls and appropriate quality assurance procedures. This provision requires the operation of backup or auxiliary facilities or similar systems that are installed by a permittee only when the operation is necessary to achieve compliance with the conditions of the permit.

4. Bypass of Treatment Facilities—(a) Definitions. (1) *Bypass* means the intentional diversion of waste streams from any portion of a treatment facility.

(2) *Severe property damage* means substantial physical damage to property, damage to the treatment facilities that causes them to become inoperable, or substantial and permanent loss of natural resources that can reasonably be expected to occur in the absence of a bypass. Severe property damage does not mean economic loss caused by delays in production.

(b) Bypass not exceeding limitations. The permittee may allow any bypass to occur that does not cause effluent limitations to be exceeded, but only if it also is for essential maintenance to assure efficient operation. These bypasses are not subject to the provisions of section B, paragraphs 4.c and 4.d of this section.

(c) Notice. (1) *Anticipated bypass.* If the permittee knows in advance of the need for a bypass, it shall submit prior notice, if possible at least ten days before the date of the bypass.

(2) Unanticipated bypass. The permittee shall submit notice of an unanticipated bypass as required in section D, paragraph 6 (24-hour reporting).

(d) Prohibition of bypass. (1) Bypass is prohibited, and the Regional Administrator may take enforcement action against a permittee for bypass. unless:

(a) Bypass was unavoidable to prevent loss of life, personal injury, or severe property damage;

(b) There were no feasible alternatives to the bypass, such as the use of auxiliary treatment facilities, retention of untreated wastes, or maintenance during normal periods of equipment downtime. This condition is not satisfied if adequate back-up equipment should have been installed in the exercise of reasonable engineering judgment to prevent a bypass that occurred during normal periods of equipment downtime or preventive maintenance; and

(c) The permittee submitted notices as required under section B, paragraph 4.c.

(2) The Regional Administrator may approve an anticipated bypass, after considering its adverse effects, if the Regional Administrator determines that it will meet the three conditions listed above in section B, paragraph 4.d.(1).

5. Upset Conditions—(a) Definition—Upset means an exceptional incident in which there is unintentional and temporary noncompliance with technology-based permit effluent limitations because of factors beyond the reasonable control of the permittee. An upset does not include noncompliance to the extent caused by operational error, improperly designed treatment facilities, inadequate treatment facilities, lack of preventive maintenance, or careless or improper operation.

(b) Effect of an Upset. An upset constitutes an affirmative defense to an action brought for noncompliance with such technology-based permit effluent limitations if the requirements of section B, paragraph 5.(c) are met. No determination made during administrative review of claims that noncompliance was caused by upset, and before an action for noncompliance, is final administrative action subject to judicial review.

(c) Conditions Necessary for a Demonstration of Upset. A permittee who wishes to establish the affirmative defense of upset shall demonstrate, through properly signed, contemporaneous operating logs, or other relevant evidence, that:

(1) An upset occurred and that the permittee can identify the cause(s) of the upset;

(2) The permitted facility was at the time being properly operated;

(3) The permittee submitted notice of the upset as required in section D, paragraph 5; and,

(4) The permittee complied with any remedial measures required under section B, paragraph 2.

(d) Burden of proof

In any enforcement proceeding the permittee seeking to establish the occurrence of an upset has the burden of proof.

6. Removed Substances. Solids, sludges, filter backwash, or other pollutants removed in the course of treatment or control of wastewaters shall be disposed of in a manner such as to prevent any pollutant from such materials from entering navigable waters. Any substance specifically listed within this permit may be discharged in accordance with specified conditions, terms, or limitations.

Section C. Monitoring and Records

1. Inspection and Entry. The permittee shall allow the Regional Administrator or an authorized representative, upon the presentation of credentials and other documents as may be required by law, to:

(a) Enter upon the permittee's premises where a regulated facility or activity is located or conducted, or where records must be kept under the conditions of this permit;

(b) Have access to and copy, at reasonable times, any records that must be kept under the conditions of this permit;

(c) Inspect at reasonable times any facilities, equipment (including monitoring and control equipment), practices, or operations regulated or required under this permit; and

(d) Sample or monitor at reasonable times, for the purposes of assuring permit compliance or as otherwise authorized by the Clean Water Act, any substances or parameters at any location.

2. Representative Sampling. Samples and measurements taken as required herein shall be representative of the volume and nature of the monitored discharge.

3. Retention of Records. The permittee shall retain records of all monitoring information, including all calibration and maintenance records and all original strip chart recordings for continuous monitoring instrumentation, and copies of all reports required by this permit, for a period of at least 3 years from the date of the sample, measurement, or report. This period may be extended by request of the Regional Administrator at any time.

The operator shall maintain records at development and production facilities for 3 years, wherever practicable and at a specific shore-based site whenever not practicable. The operator is responsible for maintaining records at exploratory facilities while they are discharging under the operator's control and at a specified shore-based site for the remainder of the 3-year retention period.

4. Record Contents. Records of monitoring information shall include:

(a) The date, exact place, and time of sampling or measurements,

(b) The individual(s) who performed the sampling or measurements,

(c) The date(s) analyses were performed,

(d) The individual(s) who performed the analyses,

(e) The analytical techniques or methods used, and

(f) The results of such analyses.

5. Monitoring Procedures

Monitoring must be conducted according to test procedures approved under 40 CFR part 136, unless other test procedures have been specified in this permit (*see* Part IV.A., below).

6. Discharge Rate/Flow Measurements

Appropriate flow measurement devices consistent with accepted practices shall be selected, maintained, and used to ensure the accuracy and reliability of measurements of the volume of monitored discharges. The devices shall be installed, calibrated, and maintained to insure that the accuracy of the measurements are consistent with the accepted capability of that type of device. Devices selected shall be capable of measuring flows with a maximum deviation of less than ± 10% from true discharge rates throughout the range of expected discharge volumes.

Section D. Reporting Requirements

1. Planned Changes. The permittee shall give notice to the Regional Administrator as soon as possible of any planned physical alterations or additions to the permitted facility. Notice is required only when:

(a) The alteration or addition to a permitted facility may meet one of the criteria for determining whether a facility is a new source in 40 CFR part 122.29(b) (48 FR 14153, April 1, 1983, as amended at 49 FR 38049, September 26, 1984); or

(b) The alteration or addition could significantly change the nature or increase the quantity of pollutants discharged. This notification applies to pollutants that are subject neither to effluent limitations in the permit, nor to notification requirements under 40 CFR 122.42(a)(1) (48 FR 14153, April 1, 1983, as amended at 49 FR 38049, September 26, 1984).

2. Anticipated Noncompliance. The permittee shall give advance notice to the Regional Administrator of any planned changes in the permitted facility or activity which may result in noncompliance with permit requirements.

3. Transfers. This permit is not transferable to any person except after notice to the Regional Administrator. The Regional Administrator may require modification or revocation and reissuance of the permit to change the name of the permittee and incorporate such other requirements as may be necessary under the Act.

4. Discharge Monitoring Reports. The operator of each lease block shall be responsible for submitting monitoring results for each facility within each lease block. If there is more than one facility (platform, jack-up, drilling barge, etc.), the discharge shall be designated in the following manner: 101 for the first facility; 201 for the second facility; 301 for the third facility; etc.

Monitoring results obtained during the previous 12 months shall be summarized and reported on a Discharge Monitoring Report (DMR) Form (EPA No. 3320-1). The highest monthly average for each facility shall be reported. The highest daily maximum sample taken during the reporting period shall be reported as the daily maximum concentration (See "Definitions" for more detailed explanations of these terms).

If any category of waste (discharge) is not applicable due to the type of operation (e.g., drilling, production), either "no activity" or "no discharge" must be reported in the appropriate categories on the DMR. A blank on the DMR indicates a non-reported discharge and signifies a violation. If no activity occurs for a permitted facility "No Activity" must be written on the DMR and it must be signed and submitted on the reporting date.

Upon receipt of a notification of intent to be covered, (part I.A.) the permittee will be notified of its specific permit number applicable to that lease block.

Furthermore, the Permittee will be informed of the discharge monitoring report due date for that facility.

All notices and reports required under this permit shall be sent to EPA Region 6 at the following address: Director, Water Management Division, USEPA, Region 6, P.O. Box 50625, Dallas, TX 75270.

5. Additional Monitoring by the Permittee. If the permittee monitors any pollutant more frequently than required by this permit, using test procedures approved under 40 CFR part 136 or as specified in this permit, the results of this monitoring shall be included in the calculation and reporting of the data submitted in the DMR. Such increased monitoring frequency shall also be indicated on the DMR.

6. Averaging of Measurements. Calculations for all limitations which require averaging of measurements shall utilize an arithmetic mean unless otherwise specified by the Regional Administrator in the permit.

7. Twenty-Four Hour Reporting. The permittee shall report any noncompliance which may endanger health or the environment (this includes any spill that requires oral reporting to the State Regulatory Authority). Information shall be provided orally within 24 hours from the time the permittee becomes aware of the circumstances. A written submission shall also be provided within 5 days of the time the permittee becomes aware of the circumstances. The written submission shall contain a description of the noncompliance and its cause; the period of noncompliance, including exact dates and times, and if the noncompliance has not been corrected, the anticipated time it is expected to continue; and steps taken or planned to reduce, eliminate, and prevent reoccurrence of the noncompliance. The Regional Administrator may waive the written report on a case-by-case basis if the oral report has been received within 24 hours.

The following shall be included as information which must be reported within 24 hours:

(a) Any unanticipated bypass which exceeds any effluent limitation in the permit;

(b) Any upset which exceeds any effluent limitation in the permit.

(c) Violations of a maximum daily discharge limitation or daily minimum toxicity limitation for any of the pollutants listed by the Regional Administrator in part III of the permit to be reported within 24 hours.

The reports should be made to Region 6 by telephone at (214) 655-6593. The Regional Administrator may waive the written report on a case-by-case basis if the oral report has been received within 24 hours.

8. Other Noncompliance. The permittee shall report all instances of noncompliance not reported under part III, section D, paragraphs 4 and 7 at the time monitoring reports are submitted. The reports shall contain the information listed in section D, paragraph 7.

9. Other Information. When the permittee becomes aware that it failed to submit any revellent facts in a permit application, or submitted incorrect information in a permit application or in any report to the Regional Administrator, it shall promptly submit such facts or information.

10. Changes in Discharges of Toxic Substances. For any toxic pollutant (see Appendix A) that is not limited in this permit, either as an additive itself or as a component in an additive formulation, the permittee shall notify the Regional Administrator as soon as he knows or has reason to believe:

(a) That any activity has occurred or will occur which would result in the discharge of such toxic pollutants, on a routine or frequent basis, if that discharge will exceed the highest of the "notification levels" described at 40 CFR 122.42(a)(1) (i) and (ii);

(b) That any activity has occurred or will occur which would result in any discharge of such toxic pollutants, on a non-routine or infrequent basis, if that discharge will exceed the highest of the "notification levels" described at 40 CFR 122.42(a)(2) (i) and (ii)

11. Signatory Requirements. All applications, reports, or information submitted to the Regional Administrator shall be signed and certified as required at 40 CFR 122.22.

(a) All permit applications shall be signed as follows:

(1) For a corporation: by a responsible corporate officer. For the purpose of this section, a responsible corporate officer means:

(i) A president, secretary, treasurer, or vice-president of the corporation in charge of a principal business function, or any other person who performs similar policy or decisionmaking functions for the corporation, or

(ii) The manager of one or more manufacturing, production, or operating facilities employing more than 250 persons or having gross annual sales or expenditures exceeding $25 million (in second-quarter 1980 dollars), if authority to sign documents has been assigned or delegated to the manager in accordance with corporate procedures.

(2) For a partnership or sole proprietorship: by a general partner or the proprietor, respectively.

(b) Authorized Representative. All reports required by the permit and other information requested by the Regional Administrator shall be signed by a person described above or by a duly authorized representative of that person. A person is a duly authorized representative only if:

(1) The authorization is made in writing by a person described above.

(2) The authorization specifies either an individual or a position having responsibility for the overall operation of the regulated facility or activity, such as the position of plant manager, operator of a well or a well field, superintendent, or position of equivalent responsibility, or an individual or position having overall responsibility for environmental matters for the company. A duly authorized representative may thus be either a named individual or any individual occupying a named position; and,

(3) The written authorization is submitted to the Regional Administrator.

(c) Changes to Authorization. If an authorization under paragraph (b) of this section is no longer accurate because a different individual or position has responsibility for the overall operation of the facility, a new authorization satisfying the requirements of paragraph (b) of this section must be submitted to the Director prior to or together with any reports, information, or applications to be signed by an authorized representative.

(d) Certification. Any person signing a document under this section shall make the following certification:

I certify under penalty of law that this document and all attachments were prepared under my direction or supervision in accordance with a system designed to assure that qualified personnel properly gather and evaluate the information submitted. Based on my inquiry of the person or persons who manage the system, or those persons directly responsible for gathering the information, the information submitted is, to the best of my knowledge and belief, true, accurate, and complete. I am aware that there are significant penalties for submitting false information, including the possibility of fine and imprisonment for knowing violations.

12. Availability of Reports. Except for data determined to be confidential under 40 CFR part 2, all reports prepared in accordance with the terms of this permit shall be available for public inspection at the office of the Regional Administrator. As required by the Clean Water Act, the name and address of any permit applicant or permittee, permit applications, permits, and effluent data shall not be considered confidential.

13. Compliance Schedules. Reports of compliance or noncompliance with, or any progress reports on, interim and final requirements contained in any compliance schedule of this permit shall be submitted no later than 14 days following each schedule date. Any reports of noncompliance shall include the cause of noncompliance, any remedial actions taken, and the probability of meeting the next scheduled requirement.

Section E. Penalties for Violations of Permit Conditions

1. Criminal—(a) *Negligent Violations.* The Act provides that any person who negligently violates permit conditions implementing Sections 301, 302, 306, 307, 308, 318, or 405 of the Act is subject to a fine of not less than $2,500 nor more than $25,000 per day of violation, or by imprisonment for not more than 1 year, or both.

(b) *Knowing Violations.* The Act provides that any person who knowingly violates permit conditions implementing sections 301, 302, 306, 307, 308, 318, or 405 of the Act is subject to a fine of not less than $5,000 nor more than $50,000 per day of violation, or by imprisonment for not more than 3 years, or both.

(c) *Knowing Endangerment.* The Act provides that any person who knowingly violates permit conditions implementing sections 301, 302, 306, 307, 308, 318, or 405 of the Act and who knows at that time that he is placing another person in imminent danger of death or serious bodily injury is subject to a fine of not more than $250,000 per day of violation, or by imprisonment for not more than 15 years, or both.

(d) *False Statements.* The Act provides that any person who knowingly makes any false material statement, representation, or certification in any application, record, report, plan, or other document filed or required to be maintained under the Act or who knowingly falsifies, tampers with, or renders inaccurate, any monitoring device or method required to be maintained under the Act, shall upon conviction, be punished by a fine of not more than $10,000, or by imprisonment for not more than 2 years, or by both. If a conviction of a person is for a violation committed after a first conviction of such person under this paragraph, punishment shall be by a fine of not more than $20,000 per day of violation, or by imprisonment of not more than 4 years, or by both. (See Section 309.c.4 of the Clean Water Act).

2. Civil Penalties. The Clean Water Act at section 309 provides that any person who violates a permit condition implementing sections 301, 302, 306, 307, 308, 318, or 405 of the Clean Water Act is subject to a civil penalty not to exceed $25,000 per day of such violation. Any person who willfully or negligently violates permit conditions implementing sections 301, 302, 306, 307, or 308 of the Clean Water Act is subject to a fine of not less than $2,500 nor more than $25,000 per day of violation, or by imprisonment for not more than 1 year, or both. The maximum penalty may be assessed for each violation occurring on a single day. A single operational upset which leads to simultaneous violations of more than one pollutant parameter shall be treated as a single violation.

3. Administrative Penalties. The Act at section 309 allows that the Regional Administrator may assess a Class I or Class II civil penalty for violations of sections 301, 302, 306, 307, 308, 318, or 405 of the Act. A Class I penalty may

not exceed $10,000 per violation except that the maximum amount shall not exceed $25,000. A Class II penalty may not exceed $10,000 per day for each day during which the violation continues, except that the maximum amount shall not exceed $125,000. An upset that leads to violations of more than one pollutant parameter will be treated as a single violation.

Part IV.

Section A. Test Procedures

For test procedures not specified below, the only authorized procedures are those described at 40 CFR part 136.

1. Visual Sheen Test. The visual sheen test is used to detect free oil by observing the surface of the receiving water for the presence of a sheen while discharging. A sheen is defined as a 'silvery' or 'metallic' sheen, gloss, or increased reflectivity; visual color; or iridescence on the water surface. The operator must conduct a visual sheen test only at times when a sheen can be observed. This restriction eliminates observations at night or when atmospheric or surface conditions prohibit the observer from detecting a sheen (e.g., overcast skies, rough seas, etc.). Certain discharges can only occur if a visual sheen test can be conducted.

The observer must be positioned on the rig or platform, relative to both the discharge point and current flow at the time of discharge, such that the observer can detect a sheen should it surface down current from the discharge. For discharges that have been occurring for at least 15 minutes previously, observations may be made any time thereafter. For discharges of less than 15 minutes duration, observations must be made during both discharge and at 5 minutes after discharge has ceased. Discharges that are prohibited unless a visual sheen test can be conducted may be allowed if the operator uses the static sheen method for detecting free oil.

2. Static Sheen Test. The static sheen test shall be conducted according to the following methods; "Minimal Volume Static Sheen Test".

1. *Scope and Application.* This method is to be used as a compliance test for all discharges in this permit with the "no discharge of free oil" requirement, when it is not possible for the operator to accomplish a visual sheen observation on the surface of the receiving water. Free oil refers to any oil contained in a waste stream that when discharged will cause a film or sheen on or a discoloration of the surface of the receiving water.

2. *Summary of Method.* Samples of drilling fluids, deck drainage, well treatment, completion and workover fluids, formation test fluids, and treated wastewater from drilling fluid dewatering activities (5 ml) and samples of drill cuttings and produced sand (15 g, wet weight basis) are introduced into a 125 ml sample container (surface area approximately 26.5 cm^2 or 4.1 in^2) with test water from a drinking-quality water source. Fluid samples are introduced by automatic pipet into the container after filling with test water; samples of solids are introduced prior to adding test water. Care should be taken to minimize agitation when adding the fluid sample or the receiving water. Observations are made immediately and five minutes later. To aid in interpretation, an oil-free drilling fluid blank and a 0.5% volume to volume (v/v) oil contaminated drilling fluid standard are tested concurrently with the effluent samples. Observations are made to ascertain if these materials cause a sheen, iridescence, gloss, or increased reflectance on the surface of the test demonstration that the tested material contains "free oil", and therefore results in a prohibition on its discharge into receiving waters.

3. *Interferences.* Residual "free oil" adhering to sampling containers and the stainless steel spatula (used to transfer drill cuttings or produced sand) will be the principal sources of contamination problems. These problems should only occur if improperly washed and cleaned equipment are used for the test. The use of disposable equipment minimizes the potential for similar contamination from pipets and test containers.

4. Apparatus, Materials, and Reagents.

4.1 Apparatus.

4.1.1 Sampling Containers—1 L polyethylene screw-cap containers.

4.1.2 Graduated cylinder—100 ml graduated cylinder required only for operators where predilution of mud discharges is required.

4.1.3 Triple-beam scale.

4.1.4 Automatic pipet capable of delivering 5 ml volumes of test samples, and disposable polypropylene pipet tips. (Equivalent to Oxford MACRO-SET 5–10 ml transfer pipet, product number 8885–890502 and MACRO-SET 5–10 ml pipet tips, approximately 132 mm×11 mm, product number 8885–081508).

4.1.5 Stainless steel spatula.

4.1.6 Test container—120 ml (4 oz) polypropylene or polyethylene specimen or sample cups, with or without screw-cap covers; approximate dimensions 72 mm high×60 mm top diameter (od)/48 mm bottom diameter (od). Surface area approximately 26.5 cm^2 (59 mm id). (Equivalent to Fisherbrand 118 ml clear polypropylene screw-cap containers, product number 14–375–112A or Lab-Tek 4 oz polyethylene disposal cups, product number 4719).

4.2 Materials and Reagents.

4.2.1 Test water—from a drinking-quality water source.

4.2.2 Oil-free generic drilling fluids.

4.2.3 Samples of diesel oil or mineral oil, added either directly or as a component of a complex additive, or diesel oil from the rigs fuel supply.

5. Calibration.

None currently specified.

6. Quality Control Procedures.

Both negative control and positive control samples are tested concurrently with the effluent test sample. The negative control consists of an oil-free sample of the type of generic drilling mud that was being used at the time that sampling was performed. The positive control is this same generic mud to which a 0.5% (v/v) spike of oil has been freshly added (within 12 hours, if tightly sealed in a screw-capped container; within 1 hour if left open to air). The added oil should be one of the following: (a) if no oil or oil-based additives have been used in the mud system, diesel oil from the rig's fuel supply; (b) if a specific diesel or mineral oil has been used in the mud system, a sample of that oil.

7. Sample Collection and Handling.

7.1 Sampling containers must be thoroughly washed with detergent, rinsed a minimum of three times with fresh water, and allowed to air dry before samples are collected.

7.2 Samples of drilling fluid must be obtained once per day unless otherwise specified in a permit from the active mud pit; the sample volume should range between 200 ml and 500 ml.

7.3 Samples of drill cuttings or produced sand must be obtained from each type of solids control equipment from which the discharges occur on any given day prior to the addition of any washdown water; samples should range between 200 g and 500 g.

7.4 Samples of deck drainage, well treatment, completion and workover fluids, formation test fluids, and treated wastewater from drilling fluid dewatering activities must be obtained from the holding facility prior to discharge; the sample volume should range between 200 ml and 500 ml.

7.5 Samples must be tightly sealed with screw-cap enclosures immediately after sample collection and tested no later than 1 hour after collection.

7.6 If predilution is imposed as a permit condition, drilling fluid samples must be diluted at the same ratio with the same prediluting water as the discharged muds until the slurry is homogeneously mixed. Muds should be mixed in screw-cap sampling containers by shaking.

8. Procedure.

8.1 Test water that will be used as "receiving water" in the test must be obtained from a drinking-quality source of water. The test container must have an air to liquid interface area of 26.5 ± 2.5 cm^2. The surface of the water should be no more than 1 cm below the top of the test container.

8.2 Drilling fluid material, deck drainage, well completion, treatment and workover fluids, formation test fluids, and treated wastewater from drilling fluid dewatering activities must be sampled by introducing the disposable pipet tip of the automatic pipet 1.5 inches below the surface of the effluent. Fluid is withdrawn from the effluent sample and carefully transferred to the test container without cleaning or scraping the pipet tip or touching it to the sides of either the effluent sample container or the test container. The effluent sample is then transferred to the test container by introducing the pipet tip containing the test sample into the test

container at least 1.5 inches below the surface level of the test water, and the test material is then slowly injected into the test water. Care must be taken to keep the pipet tip stationary as possible while expelling the sample to avoid creating turbulence in the test container. Care also must be taken to avoid discharging air bubbles, which can occur especially for viscous muds, and which generally occur when most of the sample has been expelled. Test containers and pipet tips must be used only once and discarded.

8.3 Drill cuttings or produced sand should be transferred from the sampling container directly into the test containers. Test containers should be tared and 15 g of wet solids added to the container. Test water should be added slowly; the container should be tipped slightly so that water can be added along the wall of the container and not directly onto the solids material at the bottom of the container.

8.4 Observations must be made immediately and 5 minutes after the test material is transferred to the test container. Viewing points above the test container should be made from at least 3 perspectives of the test container, at viewing angles of approximately 60° and 30° from the horizontal. Illumination of the test container must be representative of adequate lighting for a working environment to conduct routine laboratory procedures. The order for the testing should be (1) the negative control, (2) the positive control, (3) the test sample(s).

8.5 Detection of a "silvery" or "metallic" sheen, gloss, or increased reflectivity; visual color; or iridescence on the surface of the test water shall constitute a demonstration of "free oil". These visual observations include droplets, patches, streaks, or sheets of such altered surface characteristics. Generally, the appearance of free oil, as oil content increases, will proceed from droplets to swirls or streaks, to patches or sheets. With increasing time, the larger surface forms generally break down into the smaller forms, i.e. sheets will cast off swirls, which further desegregate into droplets. Iridescence, i.e., a multi-color appearance of the oil film, is generally a transient phenomenon; in many cases it may only last for 15–30 seconds after the sample is introduced. It may occur immediately after the test material is added (or test water in the case of effluents solids), but as the film spreads and its thickness decreases, color will degenerate into a "silvery" appearance, or areas of increased light reflectance.

8.6 Interpretation.

Several interferences in detecting a sheen can occur with drilling fluids. Two of these are bubbling or foaming in the test container and particulate surface deposits. Bubbles may be formed when pipetting the test sample into the test water (especially for viscous muds) and some muds (e.g., lime muds) may foam or effervesce for a short time when added to water.

Bubbles may interfere with the ability to detect oil, leading to false negative responses. Care must be taken to carefully observe the instant that the pipet tip touches the surface of the test water and the first few seconds thereafter. However, it is also useful to wait a minute or two and recheck the test containers to determine if a sheen has developed after foaming has stopped and bubbles have broken. The appearance of a sheen must persist for at least 30 seconds before it may be scored as a positive result.

Particulate surface deposits also interfere with interpreting the sheen test results, leading to false positive results. This interference occurs when drilling fluid fines remain at the surface of the test water, normally occurring for the first 15–30 seconds, after which time they sink into the test water. Some fines do not sink, however. Generally, these can be differentiated from oil sheens because fines have a "flat" appearance whereas oil sheens have a "glossy" or more reflective appearance. Also, oil sheens tend to "disappear" when the viewing angle is changed away from the angle of reflected light. Surface patches of particulate fines, on the other hand, tend to appear as darkened patches, or shadow-like appearances regardless of the viewing angle.

Section B. Definitions

Administrator means the administrator of EPA Region 6, or an authorized representative.

Areas of Biological Concern (ABC) are locations identified by the State of Texas as "no activity zones" or areas determined by EPA and the State, collectively, containing significant biological resources or features that require a "No Discharge" condition. There are currently no designated areas of biological concern.

Average daily discharge limitation means the highest allowable average of discharges over a 24-hour period, calculated as the sum of all discharges measured divided by the number of discharges measured that day.

Average monthly discharge limitation means the highest allowable average of "daily discharges" over a calendar month, calculated as the sum of all "daily discharges" measured during a calendar month divided by the number of discharges measured that month.

Batch or bulk discharge any discharge of a discrete volume or mass of effluent from a pit, tank or similar container that occurs on a one time or infrequent or irregular basis.

Batch or bulk treatment is any treatment of a discrete volume or mass of effluent from a pit, tank, or similar container prior to discharge.

Blow-out preventer control fluid is fluid used to actuate the hydraulic equipment on the blow-out preventer.

BOD5 is five day biological oxygen demand.

Boiler blowdown is discharge from boilers necessary to minimize solids build-up in the boilers, includes vents from boilers and other heating systems.

Clinkers are small lumps of melted plastic.

Coastal is any body of water landward of the inner boundary of the territorial seas or any wetlands adjacent to such waters.

COD is chemical oxygen demand.

Completion fluids are salt solutions, weighted brines, polymers and various additives used to prevent damage to the well bore during operations which prepare the drilled well for hydrocarbon production. These fluids move into the formation and return to the surface as a slug with the produced water. Drilling muds remaining in the wellbore during logging, casing and cementing operations or during temporary abandonment of the well are not considered completion fluids and are regulated by drilling fluids requirements.

Daily maximum discharge limitation means the highest allowable "daily discharge" during the calendar month.

Deck drainage is all waste resulting from platform washings, deck washings, spills, rainwater, and runoff from curbs, gutters, and drains, including drip pans and wash areas.

Desalinization unit discharge means wastewater associated with the process of creating fresh water from seawater.

Diatomaceous earth filter media means filter media used to filter seawater or other authorized completion fluids and subsequently washed from the filter.

Domestic waste is discharges from galleys, sinks, showers, safety showers, eye wash stations, hand wash stations and laundries.

Drill cuttings are particles generated by drilling into the subsurface geological formations and carried to the surface with the drilling fluid.

Drilling fluid is any fluid sent down the hole, including drilling muds and any specialty products, from the time a well is begun until final cessation of drilling in that hole.

Excess Cement Slurry the excess cement including additives and wastes from equipment washdown after a cementing operation.

Free Oil is oil that causes a sheen when discharges are released or when a static sheen test is used.

Formation test fluids are the discharges that would occur should hydrocarbons be located during exploratory drilling and tested for formation pressure and content.

Garbage means all kinds of victual, domestic and operational waste . . . generated during the normal operation of the ship and liable to be disposed of continuously or periodically . . . (See MARPOL 73/78 regulations).

Grab sample is a single representative effluent sample taken at the recognized discharge point in as short a period of time as feasible.

Graywater means drainage from dishwater, shower, laundry, bath, and washbasin drains and does not include drainage from toilets, urinals, hospitals, and drainage from cargo areas. (See MARPOL 73/78 regulations).

Inverse emulsion drilling fluids means an oil-based drilling fluid that also contains a large amount of water.

Maximum hourly rate means the greatest number of barrels of drilling fluids discharged within one hour, expressed as barrels per hour.

MGD means units of flow measurement, as million gallons per day.

MPN most probable number

Muds, cuttings, and cement at the seafloor are discharges which occur at the seafloor prior to installation of the marine riser and during marine riser disconnect and well abandonment and plugging operations.

No Activity Zones are those areas identified by MMS where no structures, drilling rigs, or pipelines will be allowed. See Areas of Biological Concern.

No Discharge Areas are areas specified by EPA where discharge of pollutants may not occur.

Packer Fluid is low solids fluids between the packer, production string and well casing (see workover fluids).

Priority Pollutants are those chemicals or elements identified by EPA, pursuant to section 307 of the Clean Water Act, and 40 CFR 401.15. See Appendix A.

Sanitary waste means human body waste discharged from toilets and urinals.

Source water and sand means water from non-hydrocarbon bearing formations for the purpose of pressure maintenance or secondary recovery, including the entrained solids.

Static Sheen is the procedure described in Part IV, Section A.2. of the permit.

TDS total dissolved solids.

Territorial Seas is "the belt of the seas measured from the line of ordinary low water along that portion of the coast which is in direct contact with the open ocean and the line marking the seaward limit of inland waters, and extending seaward a distance of three miles" (CWA Section 502).

Toxic Pollutants (See Priority Pollutants, Appendix A)

Treated wastewater from dewatered drilling fluids and cuttings means wastewater from reserve pits which have been flocculated or otherwise chemically or mechanically treated to meet specific discharge conditions.

TSS total suspended solids.

Uncontaminated ballast/bilge water is seawater added or removed to maintain proper draft of a vessel.

Uncontaminated Freshwater: freshwater which is returned to the receiving stream without the addition of any chemicals; included are (1) discharges of excess freshwater that permit the continuous operation of fire control and utility lift pumps, (2) excess freshwater from pressure maintenance and secondary recovery projects, (3) water released during the training and testing of personnel in fire protection, (4) water used to pressure test piping, and (5) once through, non-contact cooling water.

Uncontaminated Seawater is seawater which is returned to the sea without the addition of chemicals. Included are: (1) Discharges of excess seawater which permit the continuous operation of fire control and utility lift pumps, (2) excess seawater from pressure maintenance and secondary recovery projects, (3) water released during the training and testing of personnel in fire protection, (4) seawater used to pressure test piping, and (5) once through, noncontact cooling water.

Visual Sheen means a "silvery" or "metallic" sheen, gloss, or increased reflectivity; visual color; or iridescence on the water surface.

Well Treatment (stimulation) Fluids any fluid used to restore or improve productivity by chemically or physically altering hydrocarbon-bearing strata after a well has been drilled. These fluids move into the formation and return to the surface as a slug with the produced water. Stimulation fluids include substances such as acids, solvents and propping agents.

Workover Fluids salt solutions, weighted brines, polymers and other specialty additives used in a producing well to allow safe repair and maintenance or abandonment procedures. High solids drilling fluids used during workover operations are not considered workover fluids by definition and therefore must meet drilling fluid effluent limitations before discharge may occur. Packer Fluids, low solids fluids between the packer, production string and well casing, are considered to be workover fluids and must meet only the effluent requirements imposed on workover fluids.

TABLE 1—Permit Conditions and Discharge Monitoring Frequency

Effluent characteristic	Discharge limitation	Monitoring requirements		
		Measurement frequency	Sample type/method	Recorded value(s)
(A) Drilling fluids—no discharge.				
(B) Drill cuttings—no discharge.				
(C) Treated Wastewater from Drilling Fluids/Cuttings, Dewatering Activities, and Pit Closure Activities.				
Free oil	No free oil	Once/day [1]	Visual sheen on receiving water [2].	Number of days sheen observed.
Oil and grease	15 mg/l	Once/day [1]	Grab	Daily maximum.
TSS	50 mg/l	Once/day [1]	Grab	Daily maximum.
TDS	3,000 mg/l [3]	Once/day [1]	Grab	Daily maximum.
COD	200 mg/l	Once/day [1]	Grab	Daily maximum.
pH	6.0–9.0 [4]	Once/day [1]	Grab	pH value.
Chlorides	500 mg/l [3]	Once/day [1]	Grab	Daily maximum.
	1,000 mg/l [3]	Once/day [1]	Grab	Daily maximum.
Hazardous metals	No discharge [3,5]	Once/day [1]	Grab	Daily maximum.
Volume	Report (bbls)	Once/day [1]	Estimate	Daily total. [6]
(D) Deck drainage.				

TABLE 1—Permit Conditions and Discharge Monitoring Frequency—Continued

Effluent characteristic	Discharge limitation	Monitoring requirements		
		Measurement frequency	Sample type/method	Recorded value(s)
Free oil	No free oil	Once/day	Visual sheen on receiving water [2].	Number of days sheen observed.
Volume	Report (bbls)	Once/month	Estimate	Monthly total.[6]
(E) Formation test fluids.				
Free oil	No free oil	Once/discharge	Visual sheen on receiving water [2].	Number of days sheen observed.
ph	6.0–9.0 [4]	Once/discharge	Grab	pH value.
Volume	Report (bbls)	Once/discharge	Estimate	Monthly total.[6]
TX RR COM		No discharge to lakes, rivers, streams, bays and estuaries.		
(F) Well treatment, completion, and workover fluids.				
Priority pollutants	No discharge	Once/discharge	Certification [7]	
Free oil	No free oil	Once/discharge	Visual sheen on receiving water [2].	Number of days sheen observed.
pH	6.0–9.0 [4]	Once/discharge	Grab	pH value.
Volume	Report (bbls)	Once/discharge	Estimate	Monthly total.
(G) Sanitary waste.				
Solids	No floating solids	Once/day	Observation [8]	Number of days solids observed.
BOD5	45 mg/l	Once/quarter	Grab	Daily maximum.
TSS	45 mg/l	Once/quarter	Grab	Daily maximum.
Fecal coliform	200/100 ml	Once/quarter	Grab	Daily maximum.
Flow	Report (MGD)	Once/month	Estimate	Monthly avg.[6]
(H) Domestic waste.				
Solids	No discharge [9]			
(I) Miscellaneous Discharges: Desalinization Unit Discharge, Blowout Preventer Fluid, Uncontaminated Ballast Water, Uncontaminated Bilge Water, Mud, Cuttings, and Cement at the Seafloor, Uncontaminated Seawater, Uncontaminated Freshwater, Boiler Blowdown, Excess Cement Slurry, Diatomaceous Earth Filter Media				
Free oil	No free oil	Once/day [1]	Visual sheen on receiving water [2].	Number of days sheen observed.

[1] If effluent is batch treated and discharged, the monitoring requirement is once per discharge event.
[2] Discharge is possible during times other than when a visual sheen observation is possible, if the static sheen test method is used.
[3] See permit; part II A.3.b.
[4] pH at the point of discharge shall not be less than 6.0 or greater than 9.0.
[5] See fact sheet; Table 6.
[6] Information shall be recorded, but not reported unless specifically requested by EPA.
[7] No discharge except in trace amounts. Certification that the discharge does not contain priority pollutants (except in trace amounts) is required by letter to the Region. Information on the specific chemical composition shall be recorded but not reported unless requested by EPA.
[8] Monitoring by visual observation of the surface of the receiving water in the vicinity of outfall(s) shall be done during daylight at the time of maximum estimated discharge.
[9] Annex V of MARPOL 73/78 prohibits the discharge of "garbage" including food wastes, incineration ash and clinkers. Graywater, drainage from dishwater, shower, laundry, bath, and washbasins may be discharged.

Appendix A—Priority Pollutant List

Acenaphthene
Acrolein
Acrylonitrile
Benzene
Benzidine
Carbon tetrachloride (tetrachloromethane)
Chlorobenzene
1,2,4-trichlorobenzene
Hexachlorobenzene
1,2-dichloroethane
1,1,1-trichloroethane
Hexachloroethane
1,1-dichloroethane
1,1,2-trichloroethane
1,1,2,2-tetrachloroethane
Chloroethane
Bis(2-chloroethyl) ether
2-chloroethyl vinyl ether (mixed)
2-chloronaphthalene
2,4,6-trichlorophenol
Parachlorometacresol
Chloroform (trichloromethane)
2-chlorophenol
1,2-dichlorobenzene
1,3-dichlorobenzene
1,4-dichlorobenzene
3,3-dichlorobenzene
1,1-dichloroethylene
2,4-dichlorophenol
1,2-dichloropropane
1,2-dichloropropylene (1,3-dichloropropene)
2,4-dimethylphenol
2,4-dinitrotoluene
2,6-dinitrotoluene
1,2-diphenylhydrazine
Ethylbenzene
Fluoranthene
4-chlorophenyl phenyl ether
4-bromophenyl phenyl ether
Bis(2-chloroisopropyl) ether
Bis(2-chloroethyoxy) methane
Methylene chloride (dichloromethane)
Methyl chloride (dichloromethane)
Methyl bromide (bromomethane)
Bromoform (tribromomethane)
Dichlorobromomethane
Chlorodibromomethane
Hexachlorobutadiene
Hexachlorocyclopentadiene
Isophorone
Naphthalene
Nitrobenzene
2-nitrophenol
4-nitrophenol
2,4-dinitrophenol
4,6-dinitro-o-cresol
N-nitrosodimethylamine
N-nitrosodi-n-propylamine
Pentachlorophenol
Phenol
Bis(2-ethylhexyl)phthalate
Butyl benzyl phthalate
Di-n-butyl phthalate
Di-n-octyl phthalate
Diethyl Phthalate

Dimethyl phthalate 1,2-benzanthracene (benzo(a)anthracene)
Benzo(a)pyrene (3,4-benzopyrene)
3,4-Benzofluoranthene (benzo(b)fluoranthene)
11,12-benzofluoranthene (benzo(b)fluoranthene)
Chrysene
Acenaphthylene
Anthracene
1,12-benzoperylene(benzo(ghi)perylene)
Fluorene
Phenanthrene
1,2,5,6-dibenzanthracene (dibenzo(h)anthracene)
Indeno(1,2,3-cd)pyrene(2,3o-phenylene pyrene) Pyrene Tetrachloroethylene
Toluene
Trichloroethylene
Vinyl chloride (chloroethylene) Aldrin
Dieldrin
Chlordane(tech. mixture and metabolites)
4,4-DDT
4,4-DDE (p,p-DDX)
4,4-DDD (p,p-TDE)
Alpha-endosulfan
Beta-endosulfan
Endosulfan sulfate
Endrin
Endrin aldehyde
Heptachlor
Heptachlor epoxide (BHC-hexachloro-cyclohexane)
Alpha-BHC
Beta-BHC
Gamma-BHC (lindane)
Delta-BHC (PCB-poly-chlorinated bi-phenyls)
PCB-1242 (Arochlor 1242)
PCB-1254 (Arochlor 1254)
PCB-1221 (Arochlor 1221)
PCB-1232 (Arochlor 1232)
PCB-1248 (Arochlor 1248)
PCB-1260 (Arochlor 1260)
PCB-1016 (Arochlor 1016)
Toxaphene
Antimony
Arsenic
Asbestos
Beryllium
Cadmium
Chromium
Copper
Cyanide, Total
Lead
Mercury
Nickel
Selenium
N-nitrosodiphenylamine
2,3,7,8-tetrachloro-dibenzo-p-dioxin (TCDD)
Silver
Thallium
Zinc

[FR Doc. 90-12762 Filed 6-6-90; 8:45 am]
BILLING CODE 6560-50-M

federal register

Thursday
June 7, 1990

Part III

Department of Health and Human Services

Centers for Disease Control

Revision of Requirements for Content of HIV/AIDS-Related Written Materials, Pictorials, Audiovisuals, Questionnaires, Survey Instruments, and Educational Sessions, in Centers for Disease Control Assistance Programs; Notice

DEPARTMENT OF HEALTH AND HUMAN SERVICES

Centers for Disease Control

Revision of Requirements for Content of HIV/AIDS-Related Written Materials, Pictorials, Audiovisuals, Questionnaires, Survey Instruments, and Educational Sessions, in Centers for Disease Control Assistance Programs

AGENCY: Centers for Disease Control (CDC), Public Health Service, HHS.

ACTION: Revision of Requirements for Content of HIV/AIDs-Related Written Materials, Pictorials, Audiovisuals, Questionnaires, Survey Instruments, and Educational Sessions, in Centers for Disease Control Assistance Programs.

SUMMARY: The Requirements for Content of HIV/AIDs-Related Written Materials, Pictorials, Audiovisuals, Questionnaires, Survey Instruments, and Educational Sessions, in Centers for Disease Control Assistance Programs are being revised after consideration of public comments to the proposed changes in terms and conditions relating to these requirements published in the **Federal Register** on March 22, 1990 [55 FR 10667].

EFFECTIVE DATE: June 7, 1990.

FOR FURTHER INFORMATION CONTACT: Gary West, Center for Prevention Services, Centers for Disease Control, (404) 639-1480.

SUPPLEMENTARY INFORMATION: Since 1985, the Centers for Disease Control (CDC), as part of the terms and conditions for receipt of CDC funds for human immunodeficiency virus (HIV) prevention programs, has required that all educational and related program materials be reviewed by a Program Review Panel of the recipient. Since education about preventing HIV transmission involves effectively presenting sensitive subject matter, the purpose of this requirement has been to avoid disruptions of CDC-funded programs by requiring a careful consideration of the content, intended audience, and potential offensiveness of materials. A guidance document for this review entitled "Content of AIDS-Related Written Materials, Pictorials, Audiovisuals, Questionnaires, Survey Instruments, and Educational Sessions in Centers for Disease Control Assistance Programs" was last revised in October 1988. It was published in the **Federal Register** on March 9, 1989 (54 FR 10049).

In a **Federal Register** announcement published on March 22, 1990, [55 FR 10667] CDC requested public comment on proposed changes in terms and conditions relating to these requirements. CDC received 133 responses from concerned citizens and organizations including health departments, State and local governmental agencies, national organizations, and many local organizations. Respondents did not always comment specifically on each of the proposed changes and many provided comments on additional related issues. After considering these comments, CDC has modified several of the proposed changes and is now issuing a final revised set of terms and conditions with respect to this matter. Comments received, CDC responses to comments, and modifications in the proposed changes are summarized below:

1. Sections 1.b. and 1.c. of the current Basic Principles concerning offensiveness of the materials was proposed to be changed to provide that terms, descriptors, or displays not be used which "will be offensive to a majority of the intended audience or to a majority of persons outside the intended audience."

There were no objections to the requirement that materials not be offensive to a majority of the intended audience. However, 91 respondents provided comments concerning the requirement that materials not be offensive "to a majority of persons outside the intended audience." Five of the 91 respondents concurred while 86 expressed concerns regarding the impact of using such a standard. In addition to the respondents who specifically commented, 33 others objected generally to limitations on the content of materials for use in HIV prevention efforts.

Examples of comments include:

* * * this standard is contradicted by the standard set out in section 1.a., that materials "should use terms, descriptors, or displays necessary for the intended audience to understand the message."

* * * restricting the effectiveness of public health messages and information, particularly when those messages have been targeted to individuals who may unknowingly be risking exposure to the virus, borders on the unethical and unconscionable.

* * * an "offensiveness" standard is so vague that it provides little guidance to those designing educational materials. It may actually deter the development of materials.

Offensiveness, even if it were capable of definition or application as a standard, has absolutely no relationship to how effective particular materials are in reducing risk behaviors.

* * * people outside the intended audience do not need to be concerned with this information. If it does not affect them, they can choose to ignore it.

* * * reactions of persons who are not the intended audience should not be the standard for assessing the suitability of materials that are specifically designed to reduce the rate of transmission in a defined, targeted audience.

The most effective and popular educational materials often contain pictorials and verbal messages that the majority of persons outside the intended audience may find offensive.

* * * strong objections to any efforts to censor or eliminate graphic language or visuals from AIDS education efforts.

CDC Response: CDC believes that recipients of Federal funds must consider the potential offensiveness of materials they plan to use in their prevention programs. Public support of HIV prevention programs obviously will be eroded if the general public is offended by tax-supported activities. While careful judgments must be made when deciding whether or not materials are offensive and/or effective, CDC believes that these decisions are best made by Program Review Panels of the recipients of CDC funds. In most instances, CDC believes that it is possible for materials to be understandable without being offensive. However, CDC agrees that there may be instances where a particular message might be offensive to a majority of adults outside the intended audience, yet that mateial is still considered by the panel to be a particularly effective message for preventing HIV. Therefore, the following provision has been added at the end of section 1.b., following the offensiveness limitation: "* * * unless, in the judgment of the Program Review Panel, the potential offensiveness of such materials is outweighed by the potential effectiveness in communicating an important HIV prevention message." CDC feels this modification will allow Program Review Panels to "balance" potential offensiveness with potential effectiveness when reviewing CDC funded materials.

2. The basic principle in section 1.c. of the current terms and conditions requiring language and terms "* * * to be understood by a broad cross section of educated adults in society but which a reasonable person would not judge to be offensive to such people * * *" was proposed to be deleted.

Twenty respondents provided specific comments concerning this proposed change. Eleven concurred. Comments ranged from recommending complete deletion of this standard to keeping it intact in preference to the new standard.

Examples of comments include:

It is good to see the deletion of section 1.c. It has been the experience of our local review panel that this section could be misinterpreted and left much to be desired.

Many well-educated, reasonable people may not understand the need to use certain terms * * *.

* * * deletion of references to educated adults and reasonable person as standards. * * * deletes guidance to the programs and leaves them at the mercy of uninformed or uneducated persons.

CDC Response: This standard will be deleted in the new terms and conditions, as proposed on March 22. CDC believes the new offensiveness/effectiveness standard, although it still requires case-by-case-judgments to be made by the Program Review Panel, is more relevant to concerns regarding controversial educational materials. Furthermore, CDC is changing the proposed wording in 1.b. that read "* * * to a majority of *persons* outside the intended audience" to now read "* * * to a majority of *adults* outside the intended audience." The replacement of "persons" with "audlts" in this phrase is to further clarify that this standard is to be applied to persons age 18 and older.

3. Section 2 of the current Basic Principles, concerning the establishment of a Program Review Panel, was proposed to be revised to exempt CDC-developed materials and the Surgeon General's Reoprt on Acquired Immune Deficiency Syndrome from review and approval by a Program Review Panel.

Sixteen respondents provided specific comments on proposed exclusion of CDC-developed materials and the Surgeon General's Report from panel review. Thirteen concurred. In general, the majority of respondents felt that review of CDC-developed materials such as those used for the "America Responds to AIDS" national public information effort was unnecessary.

Examples of comments include:

I certainly favor the idea that CDC developed materials and the Surgeon General's Report need not be reviewed by Local Panels.

Exempting CDC-developed materials . . . would eliminate a potentially significant amount of work, thus increasing * * * panel efficiency and efficacy.

Material developed by the CDC and Surgeon General should not require further scrutiny.

Due to many regional differences in the United States, it would be important to continue the practice of a Program Review Panel approving CDC developed materials.

CDC Response: CDC will not require that the Surgeon General's report and CDC-developed materials, such as those used in the national "America Responds to AIDS" public information program, undergo review by Program Review Panels. However, local recipients always have the freedom to review CDC-developed materials before they participate in distribution if they have concerns about offensiveness or relevance to particular audiences.

4. Section 2 of the current terms and conditions requires the Program Review Panel to be composed of no less than five persons representing a reasonable cross section of the general community, but which is not drawn predominately from the target population or groups to whom reviewed materials or activities are directed.

Sixty-eight respondents commented on the restriction that members of the intended audiences not predominate the panel. Nine respondents concurred and 59 objected to this provision. Several repondents felt that this requirement contradicted the companion requirement that the panel should draw on the expertise of individuals, especially racial/ethnic minorities, who can represent cultural sensitivities and languages of the intended audiences. Because the intended audience can best judge the credibility, persuasiveness, and cultural sensitivity of materials, commenters recommend that the panel be predominately composed of such individuals. It was suggested that participation by the intended audience in the review and approval of materials may increase the likelihood that materials will be accepted by the target communities. Other respondents suggested that, in addition to the intended audience, health professionals, community leaders, and persons with HIV infection, should be members of the panel.

Examples of comments include:

* * * a panel * * * may be largely unacquainted with, or even hostile toward, the communities most directly threatened by the HIV epidemic.

This puts control of education in the hands of persons who are unlikely to know if something helps to educate those we are trying to reach or not.

Composition of program review panels should be guided by an effort to enlist persons who can best assess both the scientific accuracy and the likely effectiveness of proposed materials including parents.

Program Review Panels should not be barred from having a majority of members drawn from the intended audience.

Any effort to exclude any minority population from establishing a majority on their review panel is highly discriminatory.

CDC Response: In response to these and other comments, CDC has revised this requirement to clarify that no single intended audience shall predominate the composition of any panel. Panels must review materials for many intended audiences. The current terms and conditions are not intended to limit the expertise of any group in evaluating materials, but are intended to prevent any one audience from dominating the membership of the panel. As indicated in section 2.c.(1)(a), recipients are encouraged to use consultants to augment the expertise of Program Review Panels on particular matters. The revised terms and conditions will also provide that membership on panels reviewing materials intended for racial and ethnic minority populations, may be drawn predominately from such racial and ethnic populations.

5. Section 2.d. of the proposed terms and conditions was added to permit CDC-funded organizations that create or distribute materials in a national or regional (multistate) program to establish a single Program Review Panel to fulfill the review requirement.

Sixteen respondents provided specific comments concerning this proposed change. Thirteen concurred. The concurring respondents felt that additional review by local panels was duplicative, cumbersome, and unnecessary. Objections focused on the need to consider regional and local differences.

Examples of Comments include:

We fully support this proposal as a means of lifting burdensome and duplicative paperwork requirements from organizations receiving federal funds.

We also support the requirements in section 2.d. which allow national or regional organizations to establish a single Program Review Panel.

* * * disapproval by such panels may eliminate materials which some States would find useful.

CDC Response: The revised terms and conditions will permit organizations which undertake national and regional distribution to establish a single Program Review Panel for review of materials to be produced or distributed with CDC funds. CDC has clarified the revised section 2.d. to increase flexibility by also allowing for review on a statewide basis, as well as on a national or regional basis. CDC does not believe that all materials once reviewed under this provision need also to be reviewed locally, although each local recipient has the freedom to decide to review any material they plan to distribute.

6. Interpretation of the Kennedy/Cranston Amendment:

Respondents requested that CDC interpret, clarify or provide further guidance regarding the Kennedy Cranston Amendment (Pub. L. No. 100-436, 102 Stat. 1692 (1988)).

Examples of Comments include:

Sen. Alan Cranston and Sen. Edward Kennedy made clear * * * that their amendment was intended to permit the

funding of materials which seek to make safer sexual or drug-related behavior attractive, so long as those materials are not "designed" solely and specifically for promotion or encouragement of those behaviors.

* * * because of the confusion which has arisen concerning the meaning and interpretation of this language, it can be applied in ways which curtail the expression of certain ideas and which severely undercut AIDS prevention efforts.

CDC Response: CDC will not attempt to synopsize legislative history on this matter. Rather, CDC will continue to provide the Progrm Review Panels with the actual language that was enacted by Congress and will instruct the panels that CDC-funded materials must be consistent with this language.

These revised terms and conditions shall be effective immediately for all new CDC-funded programs and activities and for all existing CDC-funded programs and activities in which materials have not yet been reviewed by a Program Review Panel. Current fund recipients are being notified by mail of these revised terms and conditions.

The final revised set of terms and conditions, which is effective immediately, follows in its entirety.

Dated: June 1, 1990.

Robert L. Foster,

Acting Director, Office of Program Support, Centers for Disease Control.

Content of HIV/AIDS-Related Written Materials, Pictorials, Audiovisuals, Questionnaires, Survey Instruments, and Educational Sessions in Centers for Disease Control Assistance Programs

June 1990.

Controlling the spread of HIV infection and AIDS requires the promotion of individual behaviors that eliminate or reduce the risk of acquiring and spreading the virus. Messages must be provided to the public that emphasize the ways by which individuals can fully protect themselves from acquiring the virus. These methods include abstinence from the illegal use of IV drugs and from sexual intercourse except in a mutually monogamous relationship with an uninfected partner. For those individuals who do not or cannot cease risky behavior, methods of reducing their risk of acquiring or spreading the virus must also be communicated. Such messages can be controversial. This document is intended to provide guidance for the development and use of educational materials, and to require the establishment of Program Review Panels to consider the appropriateness of messages designed to communicate with various groups.

1. Basic Principles

a. Written materials (e.g., pamphlets, brochures, fliers), audiovisual materials (e.g., motion pictures and video tapes), and pictorials (e.g., posters and similar educational materials using photographs, slides, drawings, or paintings) should use terms, descriptors, or displays necessary for the intended audience to understand dangerous behaviors and explain less risky practices concerning HIV transmission.

b. Written materials, audiovisual materials, and pictorials should not include terms, descriptors, or displays which will be offensive to a majority of the intended audience or to a majority of adults outside the intended audience unless, in the judgment of the Program Review Panel, the potential offensiveness of such materials is outweighed by the potential effectiveness in communicating an important HIV prevention message.

c. Educational sessions should not include activities in which attendees participate in sexually suggestive physical contact or actual sexual practices.

d. Messages provided to young people in schools and in other settings should be guided by the principles contained in "Guidelines for Effective School Health Education to Prevent the Spread of AIDS" (MMWR 1988;37 [suppl. no. S-2]).

e. HIV/AIDS educational programs and education curricula funded by CDC from 1990 appropriations must be consistent with language contained in the Labor, Health and Human Services, and Education and Related Agencies Appropriations Act, 1990 (Pub. L. 101-166, sec. 220, 103 Stat. 1178 (1989)). This language is as follows:

"Notwithstanding any other provision of this Act, AIDS education programs funded by the Centers for Disease Control and other education curricula funded under this Act dealing with sexual activity—(1) shall not be designed to promote or encourage, directly, intravanous drug abuse or sexual activity, homosexual or heterosexual, and (2) in addition, with regard to AIDS education programs and curricula—(A) shall be designed to reduce exposure to and transmission of the etiologic agent for acquired immune deficiency syndrome by providing accurate information, and (B) shall provide information on the health risks of promiscuous sexual activity and intravenous drug abuse."

The Surgeon General's Report on Acquired Immune Deficiency Syndrome (October 1986) contains messages which are consistent with the provisions of this legislation. (Pub. L. No. 101-166, Sec. 220, 103 Stat. 1178 (1989))

2. Program Review Panel

a. Each recipient will be required to establish or identify a Program Review Panel to review and approve all written materials, pictorials, audiovisuals, questionnaires or survey instruments, and proposed educational group session activities to be used under the project plan. This requirement applies regardless of whether the applicant plans to conduct the total program activities or plans to have part of them conducted through other organization(s) and whether program activities involve creating unique materials or using/distributing modified or intact materials already developed by others. Whenever feasible, CDC funded community-based organizations are encouraged to use a program review panel established by a health department or an other CDC-funded organization rather than establish their own panel. The *Surgeon General's Report on Acquired Immune Deficiency Syndrome* (October 1986) and CDC-developed materials do not need to be reviewed by the panel unless such review is deemed appropriate by the recipient. Members of a program review panel should:

(1) Understand how HIV is and is not transmitted; and

(2) Understand the epidemiology and extent of the HIV/AIDS problem in the local population and the specific audiences for which materials are intended.

b. The Program Review Panel will be guided by the CDC Basic Principles (in the previous section) in conducting such reviews. The panel is authorized to review materials only and is not empowered either to evaluate the proposal as a whole or to replace any other internal review panel or procedure of the recipient organization or local governmental jurisdiction.

c. Applicants for CDC assistance will be required to include in the applications the following:

(1) Identification of a panel of no less than five persons which represent a reasonable cross-section of the general population. Since Program Review Panels review materials for many intended audiences, no single intended audience shall predominate the composition of the Program Review Panel, except as provided in subsection (c) below. In addition:

(a) Panels which review materials intended for a specific audience should draw upon the expertise of individuals who can represent cultural sensitivities and languages of the intended audience.

either through representation on the panels or as consultants to the panels.

(b) Panels which review materials for use with school age populations should include representatives of groups such as teachers, school administrators, parents, and students;

(c) For panels reviewing materials intended for racial and ethnic minority populations, membership of the Program Review Panel may be drawn predominately from such racial and ethnic populations.

(2) A letter or memorandum from the proposed project director, countersigned by a responsible business official, which includes:

(a) Concurrence with this guidance and assurance that its provisions will be observed;

(b) The identity of proposed members of the program review panel, including their names, occupations, and any organizational affiliations that were considered in their selection for the panel;

d. CDC-funded organizations that undertake program plans which are national, regional (multistate), or statewide in scope, or that plan to distribute materials as described above to other organizations on a national, regional, or statewide basis, may establish a single Program Review Panel to fulfill this requirement. Materials reviewed by such a single (national, regional, or State) Program Review Panel do not need to be reviewed locally unless such review is deemed appropriate by the recipient. The Program Review Panel will also be guided by the CDC Basic Principles. Such national/regional/State organization reviews should adopt a national/regional/statewide standard when applying Basic Principles 1.a. and 1.b. to the respective concepts of "intended audience" and "majority of adults outside the intended audience."

e. When a cooperative agreement/grant is awarded, the recipient will:

(1) Convene the Program Review Panel and present for its assessment copies of written materials, pictorials, and audiovisuals proposed to be used;

(2) Provide for assessment by the Program Review Panel text, scripts, or detailed descriptions for written materials, pictorials, or audiovisuals which are under development;

(3) Prior to expenditure of funds related to the ultimate program use of these materials, assure that its project files contain a statement(s) signed by the Program Review Panel specifying the vote for approval or disapproval for each proposed item submitted to the panel;

(4) Provide to CDC in regular progress reports signed statement(s) of the chairperson of the Program Review Panel specifying the vote for approval or disapproval for each proposed item that is subject to this guidance.

[FR Doc. 90-13215 Filed 6-6-90; 8:45 am]

BILLING CODE 4160-18-M

Reader Aids

Federal Register

Vol. 55, No. 110

Thursday, June 7, 1990

INFORMATION AND ASSISTANCE

Federal Register

Index, finding aids & general information	523-5227
Public inspection desk	523-5215
Corrections to published documents	523-5237
Document drafting information	523-5237
Machine readable documents	523-3447

Code of Federal Regulations

Index, finding aids & general information	523-5227
Printing schedules	523-3419

Laws

Public Laws Update Service (numbers, dates, etc.)	523-6641
Additional information	523-5230

Presidential Documents

Executive orders and proclamations	523-5230
Public Papers of the Presidents	523-5230
Weekly Compilation of Presidential Documents	523-5230

The United States Government Manual

General information	523-5230

Other Services

Data base and machine readable specifications	523-3408
Guide to Record Retention Requirements	523-3187
Legal staff	523-4534
Library	523-5240
Privacy Act Compilation	523-3187
Public Laws Update Service (PLUS)	523-6641
TDD for the deaf	523-5229

FEDERAL REGISTER PAGES AND DATES, June

22319-22764.....1
22765-22888.....4
22889-23064.....5
23065-23182.....6
23183-23418.....7

CFR PARTS AFFECTED DURING JUNE

At the end of each month, the Office of the Federal Register publishes separately a List of CFR Sections Affected (LSA), which lists parts and sections affected by documents published since the revision date of each title.

3 CFR

Administrative Orders:
Presidential Determinations:
No. 90-21 of
May 24, 1990.....23183

5 CFR

890.....22889
Proposed Rules:
550.....23088

7 CFR

51.....22765, 22772
301.....22319, 22320
352.....23065
400.....23066
910.....22774
948.....23069
953.....22775
982.....23185
998.....22776
Proposed Rules:
928.....22797
982.....23205
999.....23205
1068.....23086
1139.....22798
1948.....22920

8 CFR

103.....23345
210a.....23345

9 CFR

381.....23070
Proposed Rules:
92.....22338
309.....23100
310.....23100
317.....23100
318.....22921, 23030
320.....22921, 23030
381.....22921

10 CFR

Proposed Rules:
61.....23206

12 CFR

337.....23186
506.....22891
1611.....22323
Proposed Rules:
203.....22923
210.....23208
225.....22348

13 CFR

123.....23072
Proposed Rules:
121.....22799

14 CFR

39.....22328, 22329, 22779, 23187-23190
71.....22331, 23191
95.....23191
97.....23199
121.....23046
125.....23046
127.....23046
129.....23046
135.....23046
Proposed Rules:
Ch I.....22351, 22800
39.....22351, 22358, 22800, 22806, 22924, 23218-23231
71.....23233, 23234
75.....23234

15 CFR

774.....22892
Proposed Rules:
381.....22808

16 CFR

305.....22893

19 CFR

152.....22894

21 CFR

74.....22895
178.....22898
520.....23075
522.....23075
Proposed Rules:
333.....23235
334.....23235
335.....23235
341.....23235
344.....23235
347.....23235
348.....23235
350.....23235
355.....23235
356.....23235
357.....23235
358.....23235

23 CFR

658.....22758
Proposed Rules:
635.....22812

24 CFR

Proposed Rules:
86.....22722
251.....22887
252.....22887
255.....22887

26 CFR

48 23076
602 23076

Proposed Rules:

1 23235

27 CFR

Proposed Rules:

9 22925

28 CFR

0 ..... 22901, 22902

29 CFR

2200 22780

30 CFR

917 22903
920 22904
925 22907
935 22913
942 23345

Proposed Rules:

220 23248
914 22928
935 22929–22931

33 CFR

100 ..... 23200, 23201
117 23202
162 23202
165 23202

Proposed Rules:

117 ..... 22822, 22823
165 23250

38 CFR

Proposed Rules:

3 22932

40 CFR

35 22994
52 ..... 22332, 22334, 22784
60 23077
123 22748
130 22748
148 22520
261 22520
262 22520
264 22520
265 22520
268 22520
270 22520
271 ..... 22520, 22916
302 22520

Proposed Rules:

52 22933
141 22752
228 23251
799 22359

42 CFR

405 22785
410 22785

43 CFR

5400 22916
5440 22916

44 CFR

7 23078

46 CFR

Proposed Rules:

308 23103

47 CFR

1 23082
73 23084

Proposed Rules:

21 23254
43 23254
73 ..... 23107, 23108
74 23254
78 23254
94 23254

48 CFR

Proposed Rules:

1509 23109
1510 23109
1512 23109
1527 23109
1552 23109

49 CFR

217 22791
219 22791

50 CFR

301 23085
611 22794
620 22336
641 23086
650 22336
652 22336
659 22795
661 23087
672 ..... 22794, 22796, 22917, 22918
675 22919

Proposed Rules:

17 23109
20 23178

LIST OF PUBLIC LAWS

Note: No public bills which have become law were received by the Office of the Federal Register for inclusion in today's List of Public Laws.

Last List June 4, 1990