7-18-91
Vol. 56 No. 138
Pages 32951-33188

# federal register

Thursday
July 18, 1991

**Briefing on How To Use the Federal Register**
For information on a briefing in New Orleans, LA, see announcement on the inside cover of this issue.

**FEDERAL REGISTER** Published daily, Monday through Friday, (not published on Saturdays, Sundays, or on official holidays), by the Office of the Federal Register, National Archives and Records Administration, Washington, DC 20408, under the Federal Register Act (49 Stat. 500, as amended; 44 U.S.C. Ch. 15) and the regulations of the Administrative Committee of the Federal Register (1 CFR Ch. I). Distribution is made only by the Superintendent of Documents, U.S. Government Printing Office, Washington, DC 20402.

The **Federal Register** provides a uniform system for making available to the public regulations and legal notices issued by Federal agencies. These include Presidential proclamations and Executive Orders and Federal agency documents having general applicability and legal effect, documents required to be published by act of Congress and other Federal agency documents of public interest. Documents are on file for public inspection in the Office of the Federal Register the day before they are published, unless earlier filing is requested by the issuing agency.

The seal of the National Archives and Records Administration authenticates this issue of the **Federal Register** as the official serial publication established under the Federal Register Act. 44 U.S.C. 1507 provides that the contents of the **Federal Register** shall be judicially noticed.

The **Federal Register** will be furnished by mail to subscribers for $340 per year in paper form; $195 per year in microfiche form; or $37,500 per year for the magnetic tape. Six-month subscriptions are also available at one-half the annual rate. The charge for individual copies in paper or microfiche form is $1.50 for each issue, or $1.50 for each group of pages as actually bound, or $175.00 per magnetic tape. Remit check or money order, made payable to the Superintendent of Documents, U.S. Government Printing Office, Washington, DC 20402, or charge to your GPO Deposit Account or VISA or Mastercard.

There are no restrictions on the republication of material appearing in the **Federal Register.**

**How To Cite This Publication:** Use the volume number and the page number. Example: 56 FR 12345.

## SUBSCRIPTIONS AND COPIES

### PUBLIC

**Subscriptions:**

| | |
|---|---|
| Paper or fiche | 202-783-3238 |
| Magnetic tapes | 275-0186 |
| Problems with public subscriptions | 275-3054 |

**Single copies/back copies:**

| | |
|---|---|
| Paper or fiche | 783-3238 |
| Magnetic tapes | 275-0186 |
| Problems with public single copies | 275-3050 |

### FEDERAL AGENCIES

**Subscriptions:**

| | |
|---|---|
| Paper or fiche | 523-5240 |
| Magnetic tapes | 275-0186 |
| Problems with Federal agency subscriptions | 523-5243 |

**For other telephone numbers, see the Reader Aids section at the end of this issue.**

## THE FEDERAL REGISTER

## WHAT IT IS AND HOW TO USE IT

**FOR:** Any person who uses the Federal Register and Code of Federal Regulations.

**WHO:** The Office of the Federal Register.

**WHAT:** Free public briefings (approximately 3 hours) to present:

1. The regulatory process, with a focus on the Federal Register system and the public's role in the development of regulations.
2. The relationship between the Federal Register and Code of Federal Regulations.
3. The important elements of typical Federal Register documents.
4. An introduction to the finding aids of the FR/CFR system.

**WHY:** To provide the public with access to information necessary to research Federal agency regulations which directly affect them. There will be no discussion of specific agency regulations.

### NEW ORLEANS, LA

**WHEN:** July 23, at 9:00 am

**WHERE:** Federal Building, 501 Magazine St., Conference Room 1120, New Orleans, LA

**RESERVATIONS:** Federal Information Center 1-800-366-2998

# Contents

Federal Register
Vol. 56, No. 138
Thursday, July 18, 1991

**Agricultural Marketing Service**
RULES
Pork promotion, research, and consumer information; correction, 32952

**Agriculture Department**
*See also* Agricultural Marketing Service; Forest Service
RULES
Organization, functions, and authority delegations:
Agriculture Secretary, 32951
NOTICES
Agency information collection activities under OMB review, 33014

**Army Department**
NOTICES
Meetings:
Science Board, 33023
Patent licenses; non-exclusive, exclusive, or partially exclusive:
Malik, Riger J., 33023

**Arts and Humanities, National Foundation**
*See* National Foundation on the Arts and the Humanities

**Centers for Disease Control**
NOTICES
Grants and cooperative agreements; availability, etc.:
International laboratory capacity development and training, 33035

**Civil Rights Commission**
NOTICES
Meetings; State advisory committees:
Minnesota, 33016

**Commerce Department**
*See* International Trade Administration; National Oceanic and Atmospheric Administration

**Defense Department**
*See also* Army Department; Navy Department
RULES
Civil rights:
Nondiscrimination in federally assisted programs; CFR Part redesignation, 32965
Off-base housing; equal opportunity; CFR Part redesignation, 32964
Civilian health and medical program of uniformed services (CHAMPUS):
Outpatient care; annual deductible, 32965
Privacy Act; implementation, 32965
NOTICES
Travel per diem rates, civilian personnel; changes, 33017

**Education Department**
RULES
Special education and rehabilitative services:
State vocational rehabilitation services, 33148
NOTICES
Administrative Law Judges Office hearings:
Claim compromises—
Minnesota Education Department, 33026
West Virginia Education Department, 33026
Agency information collection activities under OMB review, 33024
Grants and cooperative agreements; availability, etc.:
Bilingual education and minority languages affairs—
Training development and improvement program, 33025

**Energy Department**
*See also* Energy Research Office; Federal Energy Regulatory Commission
NOTICES
Grant and cooperative agreement awards:
Columbia Basin College, 33027
D-Q University, 33027

**Energy Research Office**
NOTICES
Grants and cooperative agreements; availability, etc.:
Special research program—
Federal high performance computing and communications program, 33028

**Environmental Protection Agency**
PROPOSED RULES
Drinking water:
National primary drinking water regulations—
Radionuclides; maximum contaminant levels, 33050
Hazardous waste:
Identification and listing—
Landfills, composite model; and exclusions, 32993
NOTICES
Drinking water:
Underground injection control violations—
Amoco Oil Co. et al., 33029
Meetings:
Environmental Policy and Technology National Advisory Council, 33031, 33032
(2 documents)
Sewage sludge, municipal; beneficial use on Federal land; interagency policy, 33186

**Farm Credit Administration**
RULES
Farm credit system:
Personnel administration—
Salary ranges; prior approval, 32956

**Federal Aviation Administration**
RULES
Airworthiness directives:
Boeing, 32957
Cessna, 32958
Control zones; correction, 32961
PROPOSED RULES
Transition areas, 32991

**Federal Communications Commission**
RULES
Radio stations; table of assignments:
California, 32975
Mississippi, 32977
Montana, 32976

North Carolina et al., 32978
Pennsylvania, 32976
Television stations; table of assignments:
Colorado, 32977
PROPOSED RULES
Radio stations; table of assignments:
Arizona, 33013
NOTICES
Public safety radio communications plans:
Arizona area, 33032

**Federal Election Commission**
NOTICES
Meetings; Sunshine Act, 33047

**Federal Energy Regulatory Commission**
NOTICES
*Applications, hearings, determinations, etc.:*
Granite State Gas Transmission, Inc., 33028

**Federal Maritime Commission**
NOTICES
Agreements filed, etc., 33032, 33033 (2 documents)
Causualty and nonperformance certificates:
Princess Cruise Lines, Inc., et al., 33033
Freight forwarder licenses:
Amex International, Inc., 33033
Morgan & Brother Manhattan Storage Co., Inc., et al., 33034

**Federal Reserve System**
RULES
Equal opportunity rules:
Employment of noncitizens, 32954
NOTICES
Meetings; Sunshine Act, 33047
*Applications, hearings, determinations, etc.:*
Firstar Corp. et al., 33034
Glick, Robert Dunn, et al., 33034
Norwest Corp., 33034

**Fish and Wildlife Service**
RULES
Endangered and threatened species:
Knieskern's beaked-rush, 32978
NOTICES
Endangered and threatened species permit applications, 33039
Environmental statements; availability, etc.:
Boulder City, Clark County, NV; Mojave desert tortoise, incidental taking; correction, 33039

**Forest Service**
NOTICES
Environmental statements; availability, etc.:
Deschutes National Forest, OR, 33014
National Forest System lands:
Research natural areas establishment, 33015

**Health and Human Services Department**
*See also* Centers for Disease Control; Health Care Financing Administration; Health Resources and Services Administration; National Institutes of Health; Social Security Administration
NOTICES
Federal claims collection; interest rates on overdue debts, 33035

**Health Care Financing Administration**
RULES
Medicare:
Home health agencies; participation conditions; reporting and recordkeeping requirements, 32967

**Health Resources and Services Administration**
NOTICES
Grants and cooperative agreements; availability, etc.:
Human immunodeficiency virus (HIV) and Acquired Immune Deficiency Syndrome (AIDS)—
Dental reimbursement program, 33037

**Immigration and Naturalization Service**
RULES
Immigration:
Visa waiver pilot program, 32952

**Interior Department**
*See* Fish and Wildlife Service; Land Management Bureau; Minerals Management Service; National Park Service; Surface Mining Reclamation and Enforcement Office

**International Trade Administration**
NOTICES
United States-Canada free-trade agreement; binational panel reviews:
Live swine from Canada, 33016

**Interstate Commerce Commission**
NOTICES
Motor carriers and water carriers:
Finance applications, 33041
Railroad operation, acquisition, construction, etc.:
Wisconsin Central Ltd., 33042
Railroad services abandonment:
Massachusetts Bay Transportation Authority et al., 33041

**Justice Department**
*See* Immigration and Naturalization Service

**Land Management Bureau**
NOTICES
Realty actions; sales, leases, etc.:
Utah, 33038

**Minerals Management Service**
NOTICES
Royalty management:
Federal and Indian oil and gas leases estimated payment balances suffficiency determination; accounting procedure, 33040

**National Archives and Records Administration**
NOTICES
Census records; transfer to National Archives, 33043

**National Foundation on the Arts and the Humanities**
NOTICES
Meetings:
Arts National Council, 33044

**National Institute for Occupational Safety and Health**
*See* Centers for Disease Control

**National Institutes of Health**
NOTICES
Recombinant DNA molecules research:
Actions under guidelines, 33174

**National Oceanic and Atmospheric Administration**
RULES
Fishery conservation and management:
Bering Sea and Aleutian Islands groundfish, 32984
Gulf of Alaska groundfish, 32983

**National Park Service**
NOTICES
Environmental statements; availability, etc.:
Denali National Park and Preserve, AK; mining operations, 33040
National Register of Historic Places:
Pending nominations, 33040

**National Science Foundation**
NOTICES
Meetings:
Ocean Science Review Panel, 33044

**Navy Department**
NOTICES
Environmental statements; availability, etc.:
Base realignments and closures—
Naval Station Puget Sound Sand Point, WA, 33023

**Nuclear Regulatory Commission**
NOTICES
Agency information collection activities under OMB review, 33044
Environmental statements; availability, etc.:
Public Service Electric & Gas Co. et al., 33045

**Personnel Management Office**
NOTICES
Meetings:
Performance Management and Recognition System Review Committee, 33046

**Public Health Service**
*See* Centers for Disease Control; Health Resources and Services Administration; National Institutes of Health

**Social Security Administration**
PROPOSED RULES
Social security benefits and supplemental security income:
Mental disorders in adults; impairments listing, 33130
NOTICES
Supplemental security income:
Modernization project issue paper, 33038

**Surface Mining Reclamation and Enforcement Office**
RULES
Permanent program and abandoned mine land reclamation plan submissions:
Arkansas, 32961
PROPOSED RULES
Federal lands program; surface coal mining and reclamation operations:
Congressionally prohibited mining areas; coal exploration; valid existing rights, 33152
Initial and permanent programs:
Underground mining subsidence control; permit application requirements and performance standards, 33170

**ransportation Department**
*See also* Federal Aviation Administration
PROPOSED RULES
Procedural regulations:
Aviation Form 41 Schedules B-7 and B-43; confidential treatment, 32992

---

**Separate Parts In This Issue**

**Part II**
Environmental Protection Agency, 33050

**Part III**
Department of Health and Human Services, Social Security Administration, 33130

**Part IV**
Department of Education, 33148

**Part V**
Department of the Interior, Office of Surface Mining Reclamation and Enforcement, 33152

**Part VI**
Department of the Interior, Office of Surface Mining Reclamation and Enforcement, 33170

**Part VII**
Department of Health and Human Services, National Institutes of Health, 33174

**Part VIII**
Environmental Protection Agency, 33186

---

**Reader Aids**
Additional information, including a list of public laws, telephone numbers, and finding aids, appears in the Reader Aids section at the end of this issue.

## CFR PARTS AFFECTED IN THIS ISSUE

A cumulative list of the parts affected this month can be found in the Reader Aids section at the end of this issue.


**7 CFR**
2 ..... 32951
20 ..... 32951
1230 ..... 32952

**8 CFR**
217 ..... 32952

**12 CFR**
268 ..... 32954
612 ..... 32956

**14 CFR**
39 (2 documents) ..... 32957, 32958
71 ..... 32961

**Proposed Rules:**
71 ..... 32991
241 ..... 32992

**20 CFR**

**Proposed Rules:**
404 ..... 33130
416 ..... 33130

**30 CFR**
904 ..... 32961

**Proposed Rules:**
740 ..... 33152
761 (2 documents) ..... 33152, 33170
772 ..... 33152
784 ..... 33170
817 ..... 33170

**32 CFR**
192 ..... 32964
195 ..... 32965
199 ..... 32965
286b ..... 32965
300 ..... 32965
301 ..... 32964

**34 CFR**
361 ..... 33148

**40 CFR**

**Proposed Rules:**
141 ..... 33050
142 ..... 33050
261 ..... 32993

**42 CFR**
484 ..... 32967

**47 CFR**
73 (6 documents) ..... 32975–32978

**Proposed Rules:**
73 ..... 33013

**50 CFR**
17 ..... 32978
672 ..... 32983
675 ..... 32984

# Rules and Regulations

Federal Register
Vol. 56, No. 138
Thursday, July 18, 1991

This section of the FEDERAL REGISTER contains regulatory documents having general applicability and legal effect, most of which are keyed to and codified in the Code of Federal Regulations, which is published under 50 titles pursuant to 44 U.S.C. 1510.
The Code of Federal Regulations is sold by the Superintendent of Documents. Prices of new books are listed in the first FEDERAL REGISTER issue of each week.

## DEPARTMENT OF AGRICULTURE

### Office of the Secretary

### 7 CFR Parts 2 and 20

### Delegations of Authority

**AGENCY:** Office of the Secretary, USDA.

**ACTION:** Final rule.

**SUMMARY:** This document amends the delegations of authority from the Secretary of Agriculture and the General Officers of the Department to delegate the authority of the Secretary of Agriculture under section 602 of the Agricultural Trade Act of 1978, as amended, regarding export sales reporting and amends the export sales reporting regulations by revising the authority citation.

**EFFECTIVE DATE:** July 18, 1991.

**FOR FURTHER INFORMATION CONTACT:** Thomas B. McDonald, Jr., Chief, Export Sales Reporting Branch, Foreign Agricultural Service, United States Department of Agriculture, 14th and Independence Avenue, SW., Washington, DC 20250–1000, telephone (202) 447–3273.

**SUPPLEMENTAL INFORMATION:** Section 602 of the Agricultural Trade Act of 1978, as amended by section 1531 of the Food, Agriculture, Conservation, and Trade Act of 1990, requires the Secretary of Agriculture (hereafter "the Secretary") to collect and publish specific information regarding export sales contracts for designated agricultural commodities. Section 812 of the Agricultural Act of 1970, as amended (7 U.S.C. 612c–3), which required export sales reporting, is repealed by section 1578 of the Food, Agriculture, Conservation, and Trade Act of 1990, effective upon publication of this final rule. Section 602 is substantively identical to section 812 of the Agricultural Act of 1970, as amended.

The delegations of authority of the Department of Agriculture are amended to delegate to the Under Secretary for International Affairs and Commodity Programs the authority of the Secretary set forth in section 602 of the Agricultural Trade Act of 1978, as amended, and to further delegate that authority to the Administrator, Foreign Agricultural Service. Also, the export sales reporting regulations are revised to update the authority citation.

The information collection requirements contained in 7 CFR part 20 have been approved by the Office of Management and Budget (OMB) under the provisions of 44 U.S.C. chapter 35 and have been assigned OMB Control number 0551–0007. The current approval is through March 31, 1992.

This rule relates to internal agency management. Therefore, pursuant to 5 U.S.C. 553, notice of proposed rule making and opportunity for comment are not required, and this rule may be made effective less than 30 days after publication in the **Federal Register**. Further, since this rule relates to internal agency management, it is exempt from the provisions of Executive Order 12291. Finally, this action is not a rule as defined by the Regulatory Flexibility Act, Public Law No. 96–354, and, thus, is exempt from the provisions of that Act.

**List of subjects:**

*7 CFR Part 2*

Authority delegations (Government agencies).

*7 CFR Part 20*

Exports, Agricultural commodities.

Accordingly, title 7, Code of Federal Regulations is amended as follows:

## PART 2—DELEGATIONS OF AUTHORITY BY THE SECRETARY OF AGRICULTURE AND GENERAL OFFICERS OF THE DEPARTMENT

1. The authority citation for part 2 continues to read as follows:

Authority: 5 U.S.C. 301 and Reorganization Plan No. 2 of 1953.

### Subpart C—Delegations of Authority to the Deputy Secretary, the Under Secretary for International Affairs and Commodity Programs, the Under Secretary for Small Community and Rural Development, and Assistant Secretaries.

2. Section 2.21 is amended by revising paragraph (d)(23) to read as follows:

**§ 2.21 Delegations of authority to the Under Secretary for International Affairs and Commodity Programs.**

* * * * *

(d) *Related to foreign agriculture.* * * *

(23) Administer the program under section 602 of the Agricultural Trade Act of 1978, as amended (7 U.S.C. 5712), relating to export sales contract reporting operations.

* * * * *

### Subpart H—Delegations of Authority by the Under Secretary for International Affairs and Commodity Programs.

3. Section 2.68 is amended by revising paragraph (a)(15) to read as follows:

**§ 2.68 Administrator, Foreign Agricultural Service.**

(a) *Delegations.* * * *

(15) Administer the program under section 602 of the Agricultural Trade Act of 1978, as amended (7 U.S.C. 5712), relating to export sales contract reporting operations.

* * * * *

## PART 20—EXPORT SALES REPORTING REQUIREMENTS

4. The authority citation for part 20 is revised to read as follows:

Authority: 7 U.S.C. 5712.

5. Section 20.1 is revised to read as follows:

**§ 20.1 General.**

The regulations of this part 20 are issued under section 404 of the Agricultural Trade Act of 1978, as amended, to implement the export sales reporting requirements of section 602 of the Agricultural Trade Act of 1978, as amended.

Dated: June 12, 1991.

For part 2, subpart C:

**Edward Madigan,**

*Secretary of Agriculture.*

Dated: June 7, 1991.

For part 2, subpart H:

**Richard T. Crowder,**

*Under Secretary for International Affairs and Commodity Programs.*

Dated: June 14, 1991.

For part 20:

**Stephen L. Censky,**

*Acting Administrator, Foreign Agricultural Service.*

[FR Doc. 91-17115 Filed 7-17-91; 8:45 am]

BILLING CODE 3410-10-M

## Agricultural Marketing Service

## 7 CFR Part 1230

**[No. LS-91-001]**

## Pork Promotion and Research

**AGENCY:** Agricultural Marketing Service, USDA.

**ACTION:** Final rule; Correction.

**SUMMARY:** AMS is correcting the cents-per-kilogram assessments for three Harmonized Tariff Systems (HTS) numbers in the table listing assessments for imported pork and pork products which appeared in the June 10, 1991, **Federal Register** (56 FR 26589). The incorrect cents-per-kilogram assessment of 0.597009 was listed for HTS numbers 1601.00.20105, 1601.00.20908, and 1602.49.20009. The correct cents-per-kilogram assessment for each of these three numbers is 0.595242. The cents-per-pound assessment of 0.27 cents listed for these same three HTS numbers in the final rule (56 FR 26589) is correct.

**EFFECTIVE DATE:** July 10, 1991.

**FOR FURTHER INFORMATION CONTACT:** Ralph L. Tapp, Chief, Marketing Programs Branch—202/382-1115.

**SUPPLEMENTARY INFORMATION:** The following corrections are made in LS-91-001, the Pork Promotion and Research final rule to increase the amount of assessments per pound and per kilogram due on imported pork and pork products subject to assessment under the Pork Promotion, Research, and Consumer Information Act of 1985 (7 U.S.C. 4801-4819) published in the June 10, 1991 **Federal Register** (56 FR 26589):

**§ 1230.110 Assessments on imported pork and pork products.**

In § 1230.110(b), the cents-per-kilogram assessment of .597009 is revised to .595242 for the following three HTS numbers in the table on page 26590 listed below:

| HTS No. | Assessment cents/Kg |
|---|---|
| 1601.00.20105 | .595242 |
| 1601.00.20908 | .595242 |
| 1602.49.20009 | .595242 |

Done at Washington, DC on July 12, 1991.

**Daniel D. Haley,**

*Administrator.*

[FR Doc. 91-17072 Filed 7-17-91; 8:45 am]

BILLING CODE 3410-02-M

## DEPARTMENT OF JUSTICE

## Immigration and Naturalization Service

## 8 CFR Part 217

**[INS No. 1406-91]**

**RIN 1115-AB93**

## Visa Waiver Pilot Program

**AGENCY:** Immigration and Naturalization Service, Justice.

**ACTION:** Final rule.

**SUMMARY:** This rule amends 8 CFR part 217 to enhance the Visa Waiver Pilot Program by permitting nationals of countries designated for the program to apply for admission at land border ports as well as at airports and seaports. This rule will simplify the forms required of an applicant by combining two forms into one and will reduce the paperwork for the inspections process under the Pilot Program.

**EFFECTIVE DATE:** July 18, 1991.

**FOR FURTHER INFORMATION CONTACT:** Virginia F. Gorman, Assistant Chief Inspector, Inspections Division, Immigration and Naturalization Service, 425 I Street NW., room 7123, Washington, DC 20536, telephone number (202) 514-3995.

**SUPPLEMENTARY INFORMATION:** Under the Visa Waiver Pilot Program, authorized in section 217 of the Immigration and Nationality Act, nonimmigrant visitors from countries designated jointly by the Attorney General and the Secretary of State are eligible to apply for admission into the United States as nonimmigrant visitors for business or pleasure for ninety (90) days or less without obtaining nonimmigrant visitor visas at United States embassies or consulates. The primary goal of the pilot program is to promote international travel and tourism.

The Visa Waiver Pilot Program, as implemented on July 1, 1988, allowed applicants to apply for admission at air and sea ports after arrival on signatory carriers. However, many nationals from the designated countries commence their journeys by traveling to Canada or to Mexico and then make their initial application for admission to the United States at land border ports of entry. Because they did not arrive aboard a signatory carrier, they were not eligible for entry under the Visa Waiver Pilot Program. This rule implements section 201(a) of the Immigration Act of 1990 (IMMACT), Public Law 101-649, November 29, 1990, by expanding the avenues by which these nonimmigrants may enter the country and by providing for an initial entry at land border ports.

This rule also eliminates the Visa Waiver Pilot Program Information Form and replaces it with Form I-94W, the Nonimmigrant Visa Waiver Arrival/Departure Form. This will reduce the amount of paperwork that must be completed by applicants and immigration officers under this program, thereby streamlining the inspection process.

The Service published a proposed rule, with a request for comments, in the **Federal Register** on May 7, 1991, at 56 FR 21101, amending 8 CFR part 217. The comment period for the proposed rule ended on May 22, 1991. The Service received six comments. Each of the comments received has been reviewed, analyzed and considered. Generally the comments supported the enhancement of the program. The following are concerns raised by several commenters and the Service's response:

One of the commenters stated that requiring that the Form I-94W be completed prior to boarding "* * * represents a radical change * * *" and creates "* * * a new, unacceptable burden for carriers * * * ." The Service recognizes this concern and has amended 8 CFR 217.6(b)(2)(vi) to require the carrier to ensure that the Form I-94W is completed and signed by the alien prior to inspection. The proposed requirement that the carrier ensure that the Form I-94W is completed and signed prior to boarding the aircraft or vessel is under review and will be addressed at a later date.

Another commenter expressed concern that the extension of the program to land borders would "* * * impact on increases planned for airport staffing." The Service does not anticipate that this amendment will adversely affect airport inspections.

Another concern addressed "* * * exclusion procedures without a hearing * * *" and the "withholding of deportation * * *" for nationals of countries participating in this program. This rule does not change the required

waiver of administrative or judicial review or appeal (other than an application for asylum) which currently exists in 8 CFR 217.2. The proposed addition of 8 CFR 217.4(e), changing the procedure by which an applicant for admission under this program applies for asylum, has been postponed for further consideration and will be addressed at a later date. The procedure in the existing regulation will remain in effect while the matter is under review.

This rule also redefines the return passage requirement in accordance with established policy. The requirement may be met by possession of a round trip, non-transferable transportation ticket, airline employee passes indicating return passage, individual vouchers, group vouchers for charter flights, or United States military travel orders which include military dependents showing return to duty stations outside the United States on United States military flights. The requirement of § 217.2(b) of the existing rule that the trip not terminate in contiguous territory or an adjacent island unless the traveler is a resident of the country of destination was omitted in the proposed rule. Section 217.2(b) of the final rule includes this restriction.

8 CFR 217.4 is amended to establish a uniform format by which the Service will notify carriers that an alien is not found to be admissible under the program. Currently, there is no consistent manner by which the carriers are notified. The final rule now provides that the Form I-259, Notice to Detain, Deport, Remove or Present Aliens, be used for that purpose.

In accordance with 5 U.S.C. 605(b), the Commissioner of the Immigration and Naturalization Service certifies that this rule will not have a significant economic impact on a substantial number of small entities. This rule is not a major rule within the meaning of section 1(b) of E.O. 12291, nor does this rule have Federalism implications warranting the preparation of a Federalism Assessment in accordance with E.O. 12612.

The information collection requirement contained in this regulation has been approved by the Office of Management and Budget (OMB) under the provisions of the Paperwork Reduction Act. The OMB control number for this collection is 1115-0148.

**List of Subjects in 8 CFR Part 217**

Administrative practice and procedures, Aliens, Passports and visas, Reporting and record keeping requirements.

Accordingly, part 217 of chapter 1 of title 8 of the Code of Federal Regulations is amended as follows:

## PART 217—VISA WAIVER PILOT PROGRAM

1. The authority citation for part 217 continues to read as follows:

Authority: 8 U.S.C. 1103, 1187; 8 CFR part 2.

2. Section 217.2 is amended by revising paragraph (a) introductory text; revising paragraph (a)(4); removing paragraphs (a)(5) and (a)(6); redesignating paragraphs (a)(7) and (a)(8) as (a)(5) and (a)(6) respectively; and revising paragraphs (b) through (d) to read as follows:

**§ 217.2 Eligibility.**

(a) *General.* Notwithstanding the provisions of section 212(a)(7)(B)(i)(II) of the Act, a nonimmigrant visa may be waived for an alien who is a national of a country enumerated in § 217.5 of this part regardless of place of residence or point of embarkation who:

* * * * *

(4) Is in possession of a completed and signed Form I-94W, Nonimmigrant Visa Waiver Arrival/Departure Form;

* * * * *

(b) *Applicants arriving by air or sea.*

(1) Applicants must be in possession of a return trip ticket which will transport the traveler out of the United States to any other foreign port or place as long as the trip does not terminate in contiguous territory or an adjacent island; or will transport the traveler to contiguous territory or an adjacent island, if the traveler is a resident of the country of destination. A return trip ticket includes any of the following:

(i) A round trip, non-transferable transportation ticket which is valid for a period of not less than one year;

(ii) Airline employee passes indicating return passage;

(iii) Individual vouchers;

(iv) Group vouchers for charter flights only; or

(v) Military travel orders which include military dependents for return to duty stations outside the United States on United States military flights.

(2) Applicants must arrive in the United States on a carrier which has entered into an agreement as provided in § 217.6 of this part.

(c) *Applicants arriving at land border ports of entry.* Any applicant arriving at a land border port of entry must provide evidence to the immigration officer of financial solvency and a domicile abroad to which the applicant intends to return.

(d) *Aliens in transit.* An alien who is in transit through the United States is eligible to apply for admission under the Visa Waiver Pilot Program, provided the applicant meets the eligibility criteria set forth in this section.

3. Section 217.4 is amended by revising paragraphs (b) and (d) to read as follows:

**§ 217.4 Excludability and deportability.**

* * * * *

(b) *Determinations of excludability and inadmissibility.*

(1) An alien who applies for admission under the provisions of section 217 of the Act, who is determined by an immigration officer not to be eligible for admission under that section or to be excludable from the United States under one or more of the grounds of excludability listed in section 212 of the Act (other than for lack of a visa), or who is in possession of and presents fraudulent or counterfeit travel documents, will be refused admission into the United States and removed. Such refusal and removal shall be made at the level of the port director or officer-in-charge, or an officer acting in that capacity, and shall be effected without referral of the alien to an immigration judge for further inquiry, examination, or hearing, except that an alien who presents himself or herself as an applicant for admission under section 217 of the Act, who applies for asylum in the United States must be referred to an immigration judge for further inquiry.

(2) The removal of an alien under this section may be deferred if the alien is paroled into the custody of a Federal, State, or local law enforcement agency for criminal prosecution or punishment. This section in no way diminishes the discretionary authority of the Attorney General enumerated in section 212(d) of the Act.

* * * * *

(d)(1) *Removal of excludable and deportable aliens who arrived by air or sea.* The carrier which transported to the United States an alien who is to be removed pursuant to this section will be notified immediately of the determination to remove such alien by means of Form I-259, Notice to Detain, Deport, Remove, or Present Aliens. Removal from the United States under this section may be effected using the return portion of the round trip passage presented by the alien at the time of entry to the United States as required in § 217.2(b)(1) of this part. Such removal shall be on the first available means of transportation to the alien's point of embarkation to the United States. Nothing in this part absolves the carrier

of the responsibility to remove any excludable or deportable alien at carrier expense, as provided in § 217.6 (b) of this part.

(2) *Removal of excludable and deportable aliens who arrived at land border ports of entry.* Removal under this section will be by the first available means of transportation deemed appropriate by the district director.

4. Section 217.6 is amended by revising paragraphs (a), (b)(1) (ii), (iv) and (v); by revising paragraph (b)(2) (i) and (iv); and by adding a new paragraph (b)(2)(vi) to read as follows:

**§ 217.6 Carrier agreements.**

(a) *General.* The carrier agreements referred to in section 217(e) of the Act shall be made by the Commissioner on behalf of the Attorney General and shall be on Form I-775, Visa Waiver Pilot Program Agreement. The term "carrier" as used in this part refers to the owner, charterer, lessee or authorized agent of any commercial vessel or commercial aircraft engaged in transporting passengers to the United States from a foreign place.

(b) * * *

(1) * * *

(ii) Is in possession of a completed and signed Form I-94W, Nonimmigrant Visa Waiver Arrival/Departure Form, prior to inspection;

* * * * *

(iv) Is in possession of round trip, non-transferable passage that is valid for one year, issued by a carrier signatory on Form I-775, or by authorized agents who are subcontractors to such a carrier, and guaranteeing transportation from the United States;

(v) Agrees that the return portion of such passage may be used to effect removal from the United States based on a finding of excludability or deportability under § 217.4 of this part;

* * * * *

(2) The carrier further agrees to:

(i) Submit to the Immigration and Naturalization Service the Form I-94W as required by § 231 of this chapter and section 217(e)(1)(B) of the Act;

* * * * *

(iv) Retain the responsibilities and obligations enumerated in this part should the alien under the Visa Waiver Pilot Program depart temporarily for a visit to foreign contiguous territory during the period of authorized stay in the United States;

* * * * *

(vi) Ensure that the form I-94W is completed and signed by the alien prior to inspection.

* * * * *

Dated: July 2, 1991.

**Gene McNary,**

*Commissioner, Immigration and Naturalization Service.*

[FR Doc. 91-17141 Filed 7-15-91; 2:58 pm]

BILLING CODE 4410-10-M

## FEDERAL RESERVE SYSTEM

### 12 CFR Part 268

**[Docket No. R-0735]**

### Rules Regarding Equal Opportunity

**AGENCY:** Board of Governors of the Federal Reserve System.

**ACTION:** Final rule.

**SUMMARY:** The Board is amending its Rules Regarding Equal Opportunity (12 CFR part 268), by adding a new Subpart J — Employment of Noncitizens, and making a conforming change to § 268.101(b) ("Purpose and scope"), in order to define the Board's practices regarding the employment of persons who are not citizens of the United States. The amendment will govern employment of such persons consistent with the Board's security requirements.

The amendment replaces the Board's Management Policy Statement regarding Employment of Noncitizens, which prohibited employment of noncitizens subject to limited exceptions. The amendment permits the employment of persons who are not United States citizens in all positions which do not require access to sensitive information of the Board. The amendment permits the employment of only United States citizens and persons intending to become United States citizens in positions which require access to sensitive information of the Board.

**EFFECTIVE DATE:** July 11, 1991.

**FOR FURTHER INFORMATION CONTACT:** Fred Horowitz, Assistant Director (202/452-3445), Division of Human Resources Management; or Stephen L. Siciliano, Special Assistant to the General Counsel for Administrative Law (202/452-3920), or Ronald R. Davenport, Jr., Attorney (202/452-3623), Legal Division, Board of Governors. For the hearing impaired *only*, Telecommunication Device for the Deaf (TDD), Dorothea Thompson (202/452-3544).

**SUPPLEMENTARY INFORMATION:** The purpose of the amendment is to ensure that the Board's policy with regard to employment of noncitizens fairly and adequately addresses the Board's operational needs and requirements consistent with applicable law. The amendment permits the employment of noncitizens (except unauthorized aliens) in positions which do not require access to sensitive information, subject to a preference for citizens and intending citizens over equally qualified noncitizens. The amendment also prohibits the employment of *unauthorized aliens* as required by the Immigration Reform and Control Act of 1986, 8 U.S.C. 1324a(a) ("IRCA"), and restricts employment in positions that require access to sensitive information of the Board to persons who are either citizens of the United States or *intending citizens* as defined in the IRCA (8 U.S.C. 1324b(a)(3)(B)). These restrictions will apply both to persons who are employed by the Board, as well as to examiners employed by Federal Reserve Banks, after the Rule becomes effective. The examiners to whom the restrictions will apply are those who must be appointed, or selected and approved by the Board pursuant to 12 U.S.C. 325, 326, 338, or 625.

The amendment is intended to address the operational needs and requirements, particularly security requirements, of the Board. The Board is responsible, *inter alia*, for the formulation and implementation of national monetary policy, for the supervision and regulation of bank holding companies and state banks that are members of the Federal Reserve System, and for other regulatory activities. In carrying out these responsibilities, the Board acquires a great deal of sensitive information the unauthorized or untimely disclosure of which could adversely affect the safety and soundness of financial institutions or cause unnecessary or unwarranted disturbances in securities or other financial markets or compromise the foreign relations or jeopardize the economic security of the United States. Consistent with its responsibilities and the need to protect such sensitive information, the Board believes that Board employees having access to such information must be persons who are reliable and trustworthy.

In light of the Board's responsibilities and the kinds of sensitive information maintained by the Board, the Board has determined that loyalty to the United States as evidenced by citizenship or intending citizenship status is a reasonable and necessary requirement for persons having access to sensitive information of the Board. Accordingly, the Board believes that employment in positions with access to the limited classes of information defined as sensitive in the amendment should hereafter be limited to persons who are United States citizens and persons who are *intending citizens* as that term is

defined in the IRCA. The Board also believes that United States citizens and persons who are intending citizens should be preferred over equally qualified noncitizens for all other positions in which access to sensitive information is not required. This preference, which is consistent with the IRCA, is desirable to conform the Board's hiring practices as closely as possible with the hiring practices of the federal government generally.

The amendment is issued pursuant to the Board's authority under the Federal Reserve Act to adopt rules and regulations relating to the employment and compensation of its employees. 12 U.S.C. 244 and 248(*l*). The Federal Reserve Act specifically exempts Board employees from the competitive service, 12 U.S.C. 248(*l*), and the Office of Personnel Management regards all positions at the Board as being within the excepted service, 55 FR 39086, 39094 (1990). Moreover, the Board spends no appropriated funds and is not subject to the appropriations process. 12 U.S.C. 244. Accordingly, the Board is not subject to Executive Order No. 11,935, which prohibits employment of noncitizens in the competitive service, or to the restrictions on the expenditure of appropriated funds to employ noncitizens contained in the Treasury, Postal Service and Government Appropriations Act of 1990.

The amendment also addresses the requirements of the IRCA. Section 101 of the IRCA prohibits the hiring of aliens known to be *unauthorized aliens* as that term is defined at 8 U.S.C. 1324a(h)(3), and requires that employers verify that persons are not unauthorized aliens before hiring them. Section 102 of the IRCA prohibits discrimination in employment on the basis of citizenship against any noncitizen who is an *intending citizen*. An *intending citizen* is defined by the IRCA to be a citizen or national of the United States, or an alien who (1) is lawfully admitted to the United States for permanent residence, is granted the status of an alien lawfully admitted for temporary residence under 8 U.S.C. 1255a(a)(1), is admitted as a refugee under 8 U.S.C. 1157, or is granted asylum under 8 U.S.C. 1158, and (2) evidences an intention to become a United States citizen by completing a declaration of intent to become a citizen.

The amendment does not modify or otherwise affect *bona fide* occupational requirements for particular positions covered by the amendment that are established by law, regulation, or policies of the Board.

**Public Comment**

The notice and comment procedures of 5 U.S.C. 553 are not applicable because the amendment addresses "a matter relating to agency management or personnel. . . ." 5 U.S.C. 553(a)(2). *See Stewart v. Smith*, 673 F.2d 485 (D.C. Cir. 1982). In addition, the amendment conforms the Board's practice to the requirements of the IRCA and authorizes the employment without restriction of citizens and intending citizens. The amendment also significantly reduces the restrictions on hiring noncitizens contained in the Board's current Management Policy Statement. Accordingly, were the provisions of 5 U.S.C. 553 otherwise applicable, notice and opportunity for public comment would be viewed as impracticable, unnecessary, or contrary to the public interest pursuant to 5 U.S.C. 553(b)(3)(B), and good cause would exist to make the amendment effective immediately pursuant to 5 U.S.C. 553(d)(3).

**Regulatory Flexibility Act Analysis**

Pursuant to section 605(b) of the Regulatory Flexibility Act (Pub. L. No. 96-354, 5 U.S.C. 601 *et seq.*), the Board of Governors of the Federal Reserve System certifies that this amendment will not have a significant economic impact on a substantial number of small entities that would be subject to the regulation.

**List of Subjects in 12 CFR Part 268**

Administrative practice and procedure, Aged, Civil rights, Equal employment opportunity, Federal buildings and facilities, Federal Reserve System, Government employees, Handicapped, Religious discrimination, Sex discrimination, Wages.

For the reasons set forth in this document, and pursuant to the Board's authority under section 10 of the Federal Reserve Act (12 U.S.C. 244), the Board amends 12 CFR part 268 as follows:

## PART 268 — RULES REGARDING EQUAL OPPORTUNITY

1. The authority citation for part 268 continues to read as follows:

**Authority:** Secs. 10(4) and 11(*l*) of the Federal Reserve Act (partially codified in 12 U.S.C. 244 and 248(*l*)).

2. Section 268.101(b), is revised to read as follows:

**§ 268.101 Authority, purpose, and scope.**

* * * * *

(b) *Purpose and scope*. This regulation sets forth the Board's policy, program, and procedures for providing equal opportunity to Board employees and applicants for employment without regard to race, color, religion, sex, national origin, age, or physical or mental handicap. It also sets forth the Board's policy, program, and procedures for prohibiting discrimination on the basis of physical or mental handicap in programs and activities conducted by the Board, and in addition specifies the circumstances under which the Board will hire or decline to hire persons who are not citizens of the United States, consistent with the Board's operational needs, the requirements and prohibitions of the Immigration Reform and Control Act of 1986 (8 U.S.C. 1101 *et seq.*), and other applicable law.

3. Subpart J, consisting of § § 268.1001 through 268.1004, is added immediately following subpart I to read as follows:

Subpart J — Employment of Noncitizens

Sec.

268.1001 Definitions.
268.1002 Prohibitions.
268.1003 Exception.
268.1004 Applicability.

## Subpart J—Employment of Noncitizens

**§ 268.1001 Definitions.**

(a) *Noncitizen* means any person who is not a citizen of the United States.

(b) *Sensitive information* means:

(1) Information that is classified for national security purposes under Executive Order No. 10,450, including any amendments or superseding orders that the President of the United States may issue from time to time;

(2) Information that consists of confidential supervisory information of the Board, as defined in 12 CFR 261.2(b), or of similar confidential business information regarding the affairs of institutions, or their subsidiaries, which are supervised or regulated by the Board; or

(3) Information the disclosure or premature disclosure of which to unauthorized persons may be reasonably likely to impair the formulation or implementation of monetary policy, or cause unnecessary or unwarranted disturbances in securities or other financial markets, such that access to such information must be limited to persons who are loyal to the United States.

For purposes of paragraph (b)(3) of this section, information may not be deemed sensitive information merely because it would be exempt from disclosure under the Freedom of Information Act, 5 U.S.C. 552, but sensitive information must be information the unauthorized disclosure or premature disclosure of which may

be reasonably likely to impair important functions or operations of the Board.

(c) *Sensitive position* means:

(1) Any position of employment with the Board of Governors of the Federal Reserve System in which the employee will be required to have access to sensitive information, or

(2) Any examiner position with any Federal Reserve Bank for which the appointment or selection must be made or approved by the Board of Governors of the Federal Reserve System pursuant to 12 U.S.C. 325, 326, 338, or 625.

**§ 268.1002 Prohibitions.**

(a) *Unauthorized aliens.* The Board will not hire any person unless that person is able to satisfy the requirements of section 101 of the Immigration Reform and Control Act of 1986 (8 U.S.C. 1324a(a)).

(b) *Employment in sensitive positions.* The Board will not hire any person to a sensitive position unless such person is a citizen of the United States or, if a noncitizen, is an intending citizen as defined in 8 U.S.C. 1324b(a)(3).

(c) *Preference.* Consistent with the Immigration Reform and Control Act of 1986 and other applicable law, applicants for employment who are citizens of the United States or intending citizens as defined in 8 U.S.C. 1324b(a)(3) shall be preferred over equally qualified applicants who are neither United States citizens nor intending citizens.

**§ 268.1003 Exception.**

The prohibition of section 268.1002(b) does not apply to hiring for positions for which a security clearance is required under Executive Order No. 10,450, including any subsequent amendments or superseding orders that the President of the United States may issue from time to time, where the noncitizen either has or can obtain the necessary security clearance. Any offer of employment authorized by this § 268.1003 shall be contingent upon receipt of the required security clearance in the manner prescribed by law.

**§ 268.1004 Applicability.**

This subpart J applies to employment in all positions on the staff of the Board of Governors of the Federal Reserve System and to employment by Federal Reserve Banks of examiners who must be appointed, or selected and approved by the Board of Governors of the Federal Reserve System pursuant to 12 U.S.C. 325, 326, 338, or 625. This subpart J shall be effective as of July 11, 1991.

By order of the Board of Governors of the Federal Reserve System, July 12, 1991.

**Jennifer J. Johnson,**

*Associate Secretary of the Board.*

[FR Doc. 91-17091 Filed 7-17-91; 8:45 am]

BILLING CODE 6210-01-F

## FARM CREDIT ADMINISTRATION

### 12 CFR Part 612

**RIN 3052-AB21**

### Personnel Administration

**AGENCY:** Farm Credit Administration.

**ACTION:** Final rule.

**SUMMARY:** The Farm Credit Administration (FCA), by the Farm Credit Administration Board (Board), adopts final regulations that amend part 612 of the FCA regulations, that were published as proposed regulations on April 16, 1991, 56 FR 15311. The effect of the amendment is to delete requirements for FCA prior approval of salary ranges for bank senior officers, salaries of bank chief executive officers, and compensation plans other than retirement and thrift plans. The proposed amendment reflects the recent amendment of the Farm Credit Act of 1971 by the Food, Agriculture, Conservation and Trade Act of 1990 (1990 Farm Bill), which deleted the statutory requirement for such approvals and required an analysis of compensation to be performed in the examination process, and the judgment of the Board that prior approvals are not necessary at this time to achieve safety and soundness objectives.

**EFFECTIVE DATE:** The regulation shall become effective upon the expiration of 30 days after publication during which either or both houses of Congress are in session. Notice of the effective date will be published in the **Federal Register.**

**FOR FURTHER INFORMATION CONTACT:** James T. Judge, Special Assistant to the Chief, Human Resources Division, Office of Resources Management, Farm Credit Administration, McLean, VA 22102-5090 (703) 883-4135, TDD (703) 883-4444,

or

Rebecca S. Orlich, Attorney, Regulatory and Legislative Law Branch, Office of General Counsel, Farm Credit Administration, McLean, VA 22102-5090, (703) 883-4020, TDD (703) 883-4444.

**SUPPLEMENTARY INFORMATION:** Section 5.17(a)(13) of the Farm Credit Act of 1971 (1971 Act) formerly required the FCA to approve the salary scales for employees of Farm Credit System (System) institutions other than associations and the compensation of the chief executive officer of such institutions. The 1971 Act further provided that no salary scale or rate of compensation could be approved unless determined by the Board to be fair and reasonable and that the Board could not delegate its approval responsibilities. The Food, Agriculture, Conservation and Trade Act of 1990 (1990 Farm Bill), Public Law 101-624, deleted paragraph (13) of § 5.17(a) and amended § 5.19 to require the analysis of such matters in the examination process.

In response to this statutory change, the FCA proposed to amend part 612 to delete the requirements for prior approval by the FCA of salary ranges for bank senior officers, salaries of bank chief executive officers (CEOs) and compensation plans other than retirement and thrift plans.

The FCA received no comments on the substance of the proposed regulation and hereby adopts it as a final regulation. Specifically, §§ 612.2080, 612.2090 and 612.2120 are deleted in their entirety.

The FCA did, however, receive comments on the contents of the supplementary information accompanying the proposed regulations from the Farm Credit Council (FCC) on behalf of its membership and two Farm Credit Banks. The FCA also received a comment from a United States senator. The commenters disagreed with the FCA's interpretation of statutory changes as merely relieving the FCA Board of the nondelegable duty of giving prior approval. The senator, who introduced the relevant provision of the 1990 Farm Bill, also stated that the FCA's interpretation of the legislation was too narrow.

The FCA requested that Congress delete § 5.17(a)(13), which required the FCA to approve the compensation of bank CEOs and salary scales for bank employees, because of its difficulty in administering the approval requirement and also because it believes that the concern of the FCA, as an arm's-length regulator, is with safety and soundness issues rather than with ascertaining the fairness and reasonableness of compensation. Compensation may become a safety and soundness issue, for example, when it results in inappropriately high operating costs that threaten the financial health of the institution. The FCA has general rulemaking authority pursuant to § 5.17(a)(9) of the 1971 Act, and the expansion by the 1990 Farm Bill of the FCA's examination authority specifically to include compensation

matters indicates that the FCA continues to have a legitimate regulatory interest in compensation issues.

The question of whether the salaries paid by an institution become so excessive that they weaken the financial health of the institution is of obvious importance to the FCA. At the present time, the FCA believes that the examination and enforcement process will adequately address any threats to safety and soundness from compensation payments and does not envision the re-imposition of prior approvals. However, in the unlikely event that at some future time the FCA discovers widespread compensation abuses—for example, abuses similar to those Congress targeted in the golden parachute provisions of the Comprehensive Thrift and Bank Fraud Prosecution and Taxpayer Recovery Act of 1990, Public Law 101-647, 104 Stat. 4859—and if the FCA determines that these abuses cannot be effectively controlled through examination, the FCA believes that it may be necessary to promulgate regulations to stop such abuses.

The FCC and Farm Credit Banks also requested that the FCA remove from the regulations the prior approval requirements for thrift and retirement plans on the ground that such requirements are beyond the FCA's scope of authority. For the same reasons as those set forth above with respect to compensation and salary plans, the FCA believes that it continues to have the authority to regulate thrift and retirement plans on safety and soundness grounds. Thrift and retirement plans may constitute a threat to the safety and soundness of an institution if they are not properly funded and administered. However, as it noted in the supplementary information to the proposed regulation, the FCA is considering what other changes, if any, are appropriate in the remaining regulations, including those regulations requiring prior approval of thrift and retirement plans.

**List of Subjects in 12 CFR Part 612**

Agriculture, Banks, banking, Conflict of interests, Rural areas.

For the reasons stated in the preamble, part 612 of chapter VI, title 12 of the Code of Federal Regulations is amended to read as follows:

## PART 612—PERSONNEL ADMINISTRATION

1. The authority citations for part 612 is revised to read as follows:

**Authority:** Secs. 5.9, 5.17, 5.19; 12 U.S.C. 2243, 2252, 2254.

### Subpart A—Human Resources Management

**§§ 612.2080, 612.2090, 612.2120 [Removed]**

2. Subpart A is amended by removing §§ 612.2080, 612.2090 and 612.2120.

Dated: July 11, 1991.

Curtis M. Anderson,

*Secretary, Farm Credit Administration Board.*

[FR Doc. 91-17077 Filed 7-17-91; 8:45 am]

BILLING CODE 6705-01-M

---

## DEPARTMENT OF TRANSPORTATION

### Federal Aviation Administration

### 14 CFR Part 39

**[Docket No. 91-NM-126-AD; Amendment 39-7075; AD 91-15-11]**

### Airworthiness Directives; Boeing Model 767-200 and 767-300 Series Airplanes

**AGENCY:** Federal Aviation Administration (FAA), DOT.

**ACTION:** Final rule.

**SUMMARY:** This amendment supersedes an existing airworthiness directive (AD), applicable to certain Boeing Model 767-200 and 767-300 series airplanes, which currently requires inspection of the center wing fuel tank override boost pumps for discrepant inlet diffuser assembly brazed joints and replacement of unacceptable assemblies or deactivation of the center wing fuel tank system. This condition, if not corrected, could, during dry pump operation, result in the generation of sparks, thereby creating a potential ignition source. This amendment requires inspection for additional boost pumps that may be discrepant and reporting of discrepant pumps to the FAA. This amendment is prompted by information from the manufacturer that some affected boost pumps had been omitted from the initial release of its related service bulletin.

**DATES:** Effective August 2, 1991. The incorporation by reference of certain publications listed in the regulations is approved by the Director of the **Federal Register** as of August 2, 1991.

**ADDRESSES:** The applicable service information may be obtained from Boeing Commercial Airplane Group, P.O. Box 3707, Seattle, Washington 98124. This information may be examined at the FAA, Northwest Mountain Region, Transport Airplane Directorate, 1601 Lind Avenue SW., Renton, Washington; or at the Office of the **Federal Register**, 1100 L Street NW., room 8401, Washington, DC.

**FOR FURTHER INFORMATION CONTACT:** Mr. Lanny Pinkstaff, Seattle Aircraft Certification Office, Propulsion Branch, ANM-140S; telephone (206) 227-2684. Mailing address: FAA, Northwest Mountain Region, Transport Airplane Directorate, 1601 Lind Avenue SW., Renton, Washington 98055-4056.

**SUPPLEMENTARY INFORMATION:** On May 13, 1991, the FAA issued AD 91-11-08, Amendment 39-7005 (56 FR 25021, June 3, 1991), to require inspection of the center wing fuel tank override boost pumps for discrepant inlet diffuser assembly brazed joints and replacement of unacceptable assemblies or deactivation of the center wing fuel tank system. That action was prompted by reports of center wing fuel tank overrride fuel boost pumps whose brazed joints may be inadequate, which could allow separation of the diffuser ring, cause damage to the impeller and pumping unit housing, and possibly stop rotation of the pump shaft. This condition, if not corrected, could, during dry pump operation, result in the generation of sparks, thereby creating a potential ignition source.

Since issuance of that AD, the manufacturer has reported that certain additional boost pumps that may be discrepant were inadvertently left off the effectivity list specified in Boeing Alert Service Bulletin 767-28A0036, dated May 3, 1991, which was referenced in AD 91-11-08. The potential unsafe condition exists with regard to these additional boost pumps.

The FAA has reviewed and approved Boeing Alert Service Bulletin 767-28A0036, Revision 1, dated June 11, 1991, which describes inspection procedures to determine if certain affected pumping unit diffuser assemblies have properly brazed joints, and rework procedures to remove discrepant diffuser assemblies and replace them with acceptable units. The proper deactivation procedures are also described in the service bulletin for operators who elect to deactivate the center wing fuel tank rather than perform the inspection, repair, and/or replacement. This service bulletin adds 50 serial numbers of boost pumps that may be discrepant.

Since this condition is likely to exist or develop on other airplanes of the same type design, this AD supersedes AD 91-11-08 to require inspection, rework, replacement, or deactivation of the center wing fuel tank, in accordance with Revision 1 of the service bulletin previously described. In addition, operators must submit a report of their findings of discrepant pumps to the FAA.

Since a situation exists that requires immediate adoption of this regulation, it is found that notice and public procedure hereon are impracticable, and good cause exists for making this amendment effective in less than 30 days.

The regulations adopted herein will not have substantial direct effects on the States, on the relationship between the national government and the States, or on the distribution of power and responsibilities among the various levels of government. Therefore, in accordance with Executive Order 12612, it is determined that this final rule does not have sufficient federalism implications to warrant the preparation of a Federalism Assessment.

The FAA has determined that this regulation is an emergency regulation and that it is not considered to be major under Executive Order 12291. It is impracticable for the agency to follow the procedures of Executive Order 12291 with respect to this rule since the rule must be issued immediately to correct an unsafe condition in aircraft. It has been determined further that this action involves an emergency regulation under DOT Regulatory Policies and Procedures (44 FR 11034, February 26, 1979). If it is determined that this emergency regulation otherwise would be significant under DOT Regulatory Policies and Procedures, a final regulatory evaluation will be prepared and placed in the Rules Docket (otherwise, an evaluation is not required). A copy of it, if filed, may be obtained from the Rules Docket.

**List of Subjects in 14 CFR Part 39**

Air transportation, Aircraft, Aviation safety, Incorporation by reference, Safety.

**Adoption of the Amendment**

Accordingly, pursuant to the authority delegated to me by the Administrator, the Federal Aviation Administration amends 14 CFR Part 39 of the Federal Aviation Regulations as follows:

## PART 39—[AMENDED]

1. The authority citation for part 39 continues to read as follows:

**Authority:** 49 U.S.C. 1354(a), 1421 and 1423; 49 U.S.C. 106(g) (Revised Pub. L. 97-449, January 12, 1983); and 14 CFR 11.89.

**§ 39.13 [Amended]**

2. Section 39.13 is amended by removing Amendment 39-7005 and by adding the following new airworthiness directive:

91-15-11 **BOEING:** Amendment 39-7075. Docket No. 91-NM-128-AD. Supersedes AD 91-11-08.

Applicability: Model 767-200 and 767-300 series airplanes, listed in Boeing Alert Service Bulletin 767-28A0036, dated May 3, 1991, certificated in any category.

Compliance: Required as indicated, unless previously accomplished.

To prevent, during dry pump operation, a potential ignition source in the center wing tanks due to a broken pumping unit diffuser ring, accomplish the following:

(a) Within the next 30 days after June 30, 1991 (the effective date of Amendment 39-7005), inspect the center wing tank pumping units, part number 5006286, in accordance with the procedures of Boeing Alert Service Bulletin 767-28A0036, dated May 3, 1991.

(1) If diffuser assembly brazed joints are found to be acceptable, reidentify and reinstall the pumping unit in accordance with the service bulletin.

(2) If the brazed joints are determined to be discrepant as indicated by the inspection procedure, repair or replace the diffuser assembly in accordance with the service bulletin prior to reinstallation of the pumping unit.

(b) Except for center wing tank pumping units that are inspected and found to be acceptable in accordance with paragraph (a) (1) of this AD, within 30 days after the effective date of this AD, inspect the airplane or airplane records to determine if the center wing tank pumping units are suspect, in accordance with Boeing alert Service Bulletin 767-28A0036, Revision 1, dated June 11, 1991.

(1) If a pumping unit is suspect, prior to further flight, inspect the diffuser assembly brazed joints in accordance with the service bulletin.

(i) If the diffuser assembly brazed joints are found to be acceptable, reidentify and reinstall the pumping unit in accordance with the service bulletin.

(ii) If the brazed joints are determined to be discrepant as indicated by the inspection procedure, repair or replace the diffuser assembly in accordance with the service bulletin prior to reinstallation of the pumping unit.

(2) If the pumping unit is not one listed as suspect, no further action is required.

(c) In lieu of performing the inspection, repair, and/or replacement described in paragraphs (a) and (b) of this AD, deactivate the center wing fuel tank in accordance with Boeing Alert Service Bulletin 767-28A0036, dated May 3, 1991, or Revision 1, dated June 11, 1991. The tank may be reactivated only following completion of the inspections, repairs, and/or replacement required by paragraphs (a) and (b) of this AD.

(d) Within 45 days after the effective date of this AD, submit a report of findings of discrepancies detected by the inspection required by paragraphs (a) and (b) of this AD, to the Manager, Seattle Manufacturing Inspection District Office, ANM-108S, FAA, Transport Airplane Directorate, 1601 Lind Avenue SW., Renton, Washington 98055-4056; fax (206) 227-1181. Include the pump serial number and affected airplane line or serial number in the report. Information collection requirements contained in this regulation have been approved by the Office of Management and Budget (OMB) under the provisions of the Paperwork Reduction Act of 1980 (P.L. 96-511) and have been assigned OMB Control Number 2120-0056.

(e) An alternative method of compliance or adjustment of the compliance time, which provides an acceptable level of safety, may be used when approved by the Manager, Seattle Aircraft Certification Office (ACO), FAA, Transport Airplane Directorate.

**Note:** The request should be forwarded through an FAA Principal Maintenance Inspector, who may concur or comment and then send it to the Manager, Seattle ACO.

(f) Special flight permits may be issued in accordance with FAR 21.197 and 21.199 to operate airplanes to a base in order to comply with the requirements of this AD.

(g) The inspection, repair, and replacement requirements shall be done in accordance with Boeing Alert Service Bulletin 767-28A0036, Revision 1, dated June 11, 1991. This incorporation by reference was approved by the Director of the Federal Register in accordance with 5 U.S.C. 552(a) and 1 CFR part 51. Copies may be obtained from Boeing Commercial Airplane Group, P.O. Box 3707, Seattle, Washington 98124. Copies may be inspected at the FAA, Northwest Mountain Region, Transport Airplane Directorate, 1601 Lind Avenue SW., Renton, Washington, or at the Office of the Federal Register, 1100 L Street NW., room 8401, Washington, DC.

This amendment supersedes Amendment 39-7005, AD 91-11-08.

This amendment (39-7075 , AD 91-15-11 ) becomes effective August 2, 1991.

Issued in Renton, Washington, on July 5, 1991.

**Darrell M. Pederson,**

*Acting Manager, Transport Airplane Directorate, Aircraft Certification Service*

[FR Doc. 91-17099 Filed 7-17-91; 8:45 am]

BILLING CODE 4910-13-M

---

## 14 CFR Part 39

**[Docket No. 91-ANE-22; Amdt. 39-7067]**

## Airworthiness Directives; McCauley Accessory Division, the Cessna Aircraft Company, (McCauley) Model ( )2( )34C( )-( ) Series Two Bladed Threaded Retention Hub Propellers

**AGENCY:** Federal Aviation Administration (FAA), DOT.

**ACTION:** Final rule, request for comments.

**SUMMARY:** This amendment adopts a new airworthiness directive (AD) applicable to certain McCauley Model ( )2( )34C( )-( ) Series two bladed constant speed propellers with threaded hubs including those with feathering capabilities, which will supersede several existing AD's that currently require repetitive inspections for cracks in propeller hubs and in some cases

modification of those hubs. This AD requires a one time penetrant inspection for cracks and modification of affected propellers to fill the hub with oil containing red dye. Additionally, this AD will apply to seven propeller hub models that were not addressed by the AD's being superseded. This amendment is prompted by reports of blade separations and blade fatigue cracks. This condition if not corrected could result in blade separation which may result in loss of the engine and subsequent loss of aircraft control.

**DATES:** Effective August 7, 1991.

Comments must be received no later than August 19, 1991.

The incorporation by reference of certain publications listed in the regulations is approved by the Director of the Federal Register as of August 7, 1991.

**ADDRESSES:** Submit comments in duplicate to the FAA, New England Region, Office of the Assistant Chief Counsel, attention: Rules Docket No. 91-ANE-22, 12 New England Executive Park, Burlington, Massachusetts 01803-5299, or delivered in duplicate to room 311 at the above address.

Comments may be inspected at the above location between the hours of 8 a.m. and 4:30 p.m., Monday through Friday, except Federal holidays.

The applicable service information may be obtained from McCauley Accessory Division, The Cessna Aircraft Company, 3535 McCauley Drive, Vandalia, Ohio 45377. This information may be examined at the FAA, New England Region, Office of the Assistant Chief Counsel, room 311, 12 New England Executive Park, Burlington, Massachusetts.

**FOR FURTHER INFORMATION CONTACT:** Tomaso DiPaolo, Chicago Aircraft Certification Office, Propulsion Branch, ACE-140C, Small Airplane Certification Directorate, Aircraft Certification Service, FAA, 2300 East Devon Avenue, Des Plaines, Illinois 60018; telephone (312) 694-7031.

**SUPPLEMENTARY INFORMATION:** The FAA issued the following AD's that will be superseded by this AD:

| AD No. | Amendment | FR citation | Data issued |
|---|---|---|---|
| 77-17-09.. | 39-3020 | 42 FR 42189 | 8-22-77 |
| 77-20-03.. | 39-3044 | 42 FR 51563 | 9-29-77 |
| 77-23-01.. | 39-3073 | 42 FR 58512 | 11-10-77 |
| 77-24-04.. | 39-3086 | 42 FR 61034 | 12-01-77 |
| 78-20-01.. | 39-3304 | 43 FR 42730 | 9-21-78 |

The AD's being superseded require repetitive penetrant inspections for cracks in certain McCauley threaded retention propeller hub models, replacement of the hub if cracks are found, and in some cases modification to or replacement with a hub with oil containing red dye. The hub configuration with oil containing red dye provides an "on-condition" (in-service) means of early detection of possible cracks in the hub blade socket threads and the propeller blade threaded retention area, and also improves lubrication and corrosion protection. Early detection of these cracks, with required corrective action will prevent blade separation which could result in the loss of the engine and subsequent loss of aircraft control. After issuing AD's 77-17-09, 77-20-03, 77-23-01, 77-24-04, and 78-20-01, the FAA determined that the AD's being superseded permitted all of the affected propeller hub models, under certain conditions, to be repetitively inspected for cracks without modification to a hub with oil containing red dye. Recently, a modified propeller hub was found to be leaking oil containing red dye after a total time-in-service which was less than the repetitive inspection interval provided in the AD's being superseded. Following disassembly and inspection, the propeller blade was found cracked in the threaded retention area. Also, hub failures have occurred where modified hubs were not investigated for the leakage source of oil containing red dye. The AD's being superseded did not require mandatory investigation of the leakage. Additionally, the FAA has received two reports of blade separations occurring due to fatigue cracks which initiated in the propeller hub socket threads on hub models not previously addressed by AD action. The cause of these two cracks has not been determined.

Since this situation is likely to exist or develop on other propellers of the same type design, the FAA is superseding AD's 77-17-09, 77-20-03, 77-23-01, 77-24-04, and 78-20-01, and adopting a new AD which requires a mandatory penetrant inspection of the propeller blade threaded retention area, the hub blade socket threads, the retention nut threads, and the ferrule threads, and a mandatory modification of the propeller assembly to fill the hub with oil containing a red dye on certain McCauley Model ( )2( )34C( )-( ) threaded retention hubs found on two-bladed, constant speed propellers, including those with feathering capabilities. In addition, this AD requires mandatory investigation and corrective action when leakage of oil containing red dye is observed on affected propeller hub models after the effective date of this AD.

Since this condition could result in blade separation, loss of the engine and subsequent loss of the aircraft control, there is a need to minimize the exposure of aircraft to this unsafe condition. Therefore, safety in air transportation requires adoption of this regulation without prior notice and public comment. In addition, based on the above and the urgent need to inspect and modify propeller blades and hubs, to prevent blade separate, a situation exists that requires the immediate adoption of this regulation. Therefore, it is found that notice and public procedure are impracticable, and good cause exists for the adoption of the amendment without public comment, and good cause exists for making this amendment effective in less than 30 days.

Although this action is in the form of a final rule, which involves an emergency and, thus, was not preceded by notice and public procedure, interested persons are invited to submit such written data, views, or arguments as they may desire regarding this AD. Communications should identify the docket number and be submitted to the FAA, New England Region, Office of the Assistant Chief Counsel, attention: Rules Docket No. 91-ANE-22, 12 New England Executive Park, Burlington, Massachusetts 01803-5299. All communications received by the deadline date indicated above will be considered by the Administrator, and the AD may be changed in light of the comments received.

The regulations adopted herein do not have substantial direct effects on the States, on the relationship between the national government and the States, or on the distribution of power and responsibilities among the various levels of government. Therefore, in accordance with Executive Order 12612, it is determined that this final rule does not have sufficient federalism implications to warrant the preparation of a Federalism Assessment.

The FAA has determined that this regulation is an emergency regulation that is not considered to be major under Executive Order 12291. It is impracticable for the agency to follow the procedures of Executive Order 12291 with respect to this rule since the rule must be issued immediately to correct an unsafe condition in aircraft. It has been determined further that this action involves an emergency regulation under DOT Regulatory Policies and Procedures (44 FR 11034, February 26, 1979). If it is determined that this emergency regulation otherwise would be significant under DOT Regulatory Policies and Procedures, a final

regulatory evaluation will be prepared and placed in the Rules Docket (otherwise, an evaluation is not required). A copy of it, if filed may be obtained from the Rules Docket.

## List of Subjects in 14 CFR Part 39

Air transportation, Aircraft, Aviation safety, Incorporation by reference, Safety.

## Adoption of the Amendment

Accordingly, pursuant to the authority delegated to me by the Administrator, the Federal Aviation Administration (FAA) amends Part 39 of the Federal Aviation Regulations (FAR) as follows:

## PART 39—[AMENDED]

1. The authority citation for Part 39 continues to read as follows:

**Authority:** 49 U.S.C. 1354(a), 1421 and 1423; 49 U.S.C. 106(g) (Revised Pub. L. 97-449, January 12, 1983); and 14 CFR 11.89.

### § 39.13 [Amended]

2. Section 39.13 is amended by removing amendments Nos. 39-3020 (42 FR 42189), 39-3044 (42 FR 51563), 39-3073 (42 FR 58512), 39-3086 (42 FR 61034), 39-3304 (43 FR 42730), and adding the following new Airworthiness Directive (AD):

**91-15-04—McCauley Accessory Division, Cessna Aircraft Company:** (Amendment 39-7065, Docket No. 91-ANE-22)

*Applicability:* McCauley Model ( )2 ( )34C( )-( ) Series two bladed constant speed propellers with threaded retention hubs, including those with feathering capabilities listed as follows:

AFFECTED PROPELLER HUB MODELS

| Constant speed | Feathering |
|---|---|
| 2D34C8-( ) | D2AF34C30-( ) |
| 2D34C9-( ) | 2AF34C55-( ) |
| 2D34C53-( ) | D2AF34C56-( ) |
| B2D34C53-( ) | D2AF34C61-( ) |
| D2A34C58-( ) | D2AF34C65-( ) |
| F2A34C58-( ) | D2AF34C81-( ) |
| 2A34C66-( ) | |
| E2A34C70-( ) | |
| E2A34C73-( ) | |
| D2A34C78-( ) | |
| D2A34C98-( ) | |

The parentheses used in the above list indicate the presence or absence of an additional letter(s) which vary the basic hub model designation. These letter(s) define minor changes that do not affect interchangeability or eligibility, and therefore, this AD still applies regardless of whether these letters are present or absent on the hub model designation.

The above listed McCauley propeller hubs are found on, but not limited to, the following aircraft certificated in any category:

Beech A23-24, A24, A24R, 58, 58A; 95-55, -A55, -B55, -B55A, -B55B, -C55, -C55A; D55, D55A, E55, E55A.

Bellanca 17-30, 17-30A.

Cessna 180, 182H, 185, 185 A thru D, A185E, A185F, 188, 188A, 188B, A188, A188A, A188B, 206, P206, P206 A thru E, TP206 A thru E, TU206 A thru G, U206, U206 A thru G, 207, T207, 210, 210 A thru H, 210 J thru L, 210-5, 210-5A, T210 F thru H, T210 J thru L, 305B, 305E, 310J, E310J, 310K, 310L, 310N, 336, 337, 337 A thru F, M337 B, T337 B thru F.

Fuji FA-200-180.

Interceptor (AeroCommander/Meyers) 200 A thru C.

Mooney M20C, M20D, M20G.

Navion A, B, D thru H.

Procaer F15/C.

Reims F337E, F337F, FT337E, FT337F.

Transavia PL-12/T-300.

Windecker AC-7.

*Compliance:* Required as indicated, unless previously accomplished.

To prevent possible blade separation, which could result in the loss of the engine and subsequent loss of aircraft control, accomplish the following in accordance with the compliance schedule as indicated:

| Prior propeller utilization (hours/calendar months given as time-in-service) | Compliance schedule of propeller inspection and modification |
|---|---|
| Greater than 900 hours, or 59 calendar months since last overhaul/penetrant inspection or installed new, or prior time-in-service unknown. | Within the next 100 hours, or at the next annual inspection, or within 12 calendar months after the effective date of this AD, whichever occurs first. |
| Less than or equal to both 900 hours and 59 calendar months since last overhaul/penetrant inspection or installed new. | Prior to the accumulation of 1,000 hours or 60 calendar months since last overhaul/penetrant inspection, or installed new, whichever occurs first. |

(a) For propellers which have incorporated a hub containing oil with red dye and have been designated at initial production as a hub model number listed in the appendix to this AD, or prior manufactured propellers whose hubs have been modified to contain oil with a red dye and reidentified as a hub model number listed in the appendix to this AD compliance is required only with paragraphs (f) and (h) of this AD.

(b) Perform propeller disassembly in accordance with the procedures specified for the affected hub model number listed in paragraph 1 on page 4 of McCauley Service Bulletin (SB) 184, dated March 15, 1991.

(c) Penetrant inspect the propeller assembly for cracks in the propeller blade threaded retention area, the hub blade socket threads, the retention nut threads, and the ferrule threads in accordance with the procedures specified for the affected hub model number listed in paragraph 2 on page 5 of McCauley SB 184, dated March 15, 1991.

(d) Remove from service, prior to further flight, propeller assemblies which exhibit cracks and replace with a serviceable unit, modified in accordance with paragraph (e) of this AD, or with an equivalent initial production propeller which has incorporated a hub with oil containing red dye.

(e) Modify the affected propeller hub assembly to contain oil with a red dye and reidentify in accordance with the procedures specified for the affected hub model number listed in paragraph 3 on page 6 of McCauley SB 184, dated March 15, 1991.

Note: The modification of the propeller hub assembly to contain oil with a red dye provides an "on-condition" (in-service) means of early crack detection to prevent blade separation and also improves lubrication and corrosion protection. The oil will add approximately 2.8 lbs. to the weight of the propeller assembly.

(f) If leakage of oil containing red dye is detected in service (whether during flight or while on the ground), determine prior to further flight, the source of leakage in accordance with the procedures specified for the affected hub model number listed in paragraph 4 on page 7 of McCauley SB 184, dated March 15, 1991. If the inspection reveals a crack, compliance with paragraph (d) of this AD is required.

(g) The "calendar month" compliance times stated in this AD allow the performance of the required action prior to the last day of the month in which compliance is required.

Note: For example, a required inspection and modification 60 months from last overhaul/penetrant inspection that was performed on December 15, 1986, would allow the penetrant inspection and modification to be performed no later than December 31, 1991.

(h) Report in writing any cracks found during inspections accomplished in accordance with paragraphs (c) or (f) of this AD to the Manager, Chicago Aircraft Certification Office, within ten (10) days of the inspection. Information collection requirements contained in this regulation have been approved by the Office of Management and Budget (OMB) under the provisions of the Paperwork Reduction Act of 1980 (Pub. L. 96-511) and has been assigned OMB Control Number 2120-0056.

(i) Aircraft may be ferried in accordance with the provisions of Federal Aviation Regulations (FAR) 21.197 and 21.199 to a base where the AD can be accomplished.

(j) Upon submission of substantiating data by an owner or operator through an FAA Inspector (maintenance, avionics, or operations, as appropriate) an alternate method of compliance with the requirements of this AD or adjustments to the compliance times specified in this AD may be approved by the Manager, Chicago Aircraft Certification Office, Small Airplane Certification Directorate, Aircraft Certification Service, FAA, 2300 East Devon Avenue, Des Plaines, Illinois 60018.

The disassembly, inspection, and modification shall be done in accordance with the procedures listed in McCauley SB 184, dated March 15, 1991. This incorporation by reference was approved by the Director of the Federal Register in accordance with 5 U.S.C. 552(a) and 1 CFR part 51. Copies may be obtained from McCauley Accessory Division, The Cessna Aircraft Company, 3535

McCauley Drive, Vandalia, Ohio 45377. Copies may be inspected at the FAA, New England Region, Office of the Assistant Chief Counsel, 12 New England Executive Park, room 311, Burlington, Massachusetts, or at the Office of the Federal Register, 1100 L Street NW., room 8401, Washington, DC.

APPENDIX—OIL-FILLED PROPELLER HUB COMPLIANCE INDICATOR TABLE

| Propeller hub model † | Compliance indicator | Propeller hub model † | Compliance indicator |
|---|---|---|---|
| 2D34C8 | 2D34C8-( )P and/or oil-fill plug in side of hub | F2A34C58 | F2A34C58-( )O and/or oil-fill plug in side of hub. |
| 2D34C9 | 2D34C9-( )P and/or oil-fill plug in side of hub | D2AF34C61 | D2AF34C61-( )O and/or oil-fill plug in side of hub. |
| D2AF34C30 | D2AF34C30-( )P and/or oil-fill plug in side of hub | D2AF34C65 | D2AF34C65-( )O and/or oil-fill plug in side of hub. |
| B2D34C53 | B2D34C53-( )O and/or oil-fill plug in side of hub | 2A34C66 | 2A34C66-( )P and/or oil-fill plug in side of hub. |
| 2D34C53 | 2D34C53-( )O and/or oil-fill plug in side of hub | E2A34C70 | E2A34C70-( )P and/or oil-fill plug in side of hub. |
| 2AF34C55 | 2AF34C55-( )O and/or oil-fill plug in side of hub | E2A34C73 | E2A34C73-( )P and/or oil-fill plug in side of hub. |
| D2AF34C56 | D2AF34C56-( )O and/or oil-fill plug in side of hub | D2A34C78 | D2A34C78-( )P and/or oil-fill plug in side of hub. |
| D2A34C58 | D2A34C58-( )O and/or oil-fill plug in side of hub | D2AF34C81 | D2AF34C81-( )O and/or oil-fill plug in side of hub. |
| | | D2A34C98 | D2A34C98-( )O and/or oil-fill plug in side of hub. |

†Propeller models are listed in numerical sequence following the letter C in the model designation

This amendment supersedes, AD 77-17-09, amendment 39-3020, AD 77-20-03, amendment 39-3044, AD 77-23-01, amendment 39-3073, AD 77-24-04, amendment 39-3086, AD 78-20-01, amendment 39-3044.

This amendment (39-7067, AD 91-15-04) becomes effective August 7, 1991.

Issued in Burlington, Massachusetts, on June 25, 1991.

**Jack A. Sain,**

*Manager, Engine & Propeller Directorate, Aircraft Certification Service.*

[FR Doc. 91-17100 Filed 7-17-91; 8:45 am

BILLING CODE 4910-13-M

## 14 CFR Part 71

**[Airspace Docket No. 91-AWP-1]**

## Amendment of the Stockton, CA, Control Zone

July 1, 1991.

**AGENCY:** Federal Aviation Administration (FAA), DOT.

**ACTION:** Final rule; correction.

**SUMMARY:** This action corrects an error in the effective date of the final rule that was published in the **Federal Register** on May 24, 1991 (56 FR 23786), Airspace Docket No. 91-AWP-1.

**EFFECTIVE DATE:** 0901 u.t.c., September 19, 1991.

**FOR FURTHER INFORMATION CONTACT:** Tom Bowman, Airspace Specialist, System Management Branch, AWP-530, Air Traffic Division, Western-Pacific Region, Federal Aviation Administration, 25000 Aviation Boulevard, Lawndale, California 90261, telephone (213) 297-0433.

**SUPPLEMENTARY INFORMATION:**

### History

**Federal Register** Document 91-12362, Airspace Docket No. 91-AWP-1, Published on May 24, 1991 (56 FR 23786), amended the description and the effective hours of the Stockton, CA, Control Zone. An error was discovered in the effective date. This action corrects that error.

### Correction to Final Rule

Accordingly, pursuant to the authority delegated to me, the effective date for the Stockton, CA, Control Zone, as published in the **Federal Register** on May 24, 1991 (56 FR 23787), **Federal Register** Document 91-12362; page 23787 column 1), is corrected as follows:

**EFFECTIVE DATE:** 0901 u.t.c., September 19, 1991.

Issued in Los Angeles, California, on June 28, 1991.

**Richard R. Lien,**

*Manager, Air Traffic Division, Western-Pacific Region.*

[FR Doc. 91-17087 Filed 7-17-91; 8:45 am]

BILLING CODE 4910-13-M

## DEPARTMENT OF THE INTERIOR

## Office of Surface Mining Reclamation and Enforcement

## 30 CFR Part 904

## Arkansas Permanent Regulatory Program

**AGENCY:** Office of Surface Mining Reclamation and Enforcement (OSM), Interior.

**ACTION:** Final rule; approval of amendment.

**SUMMARY:** The Director of OSM is approving a proposed amendment submitted by the State of Arkansas as a modification to its permanent regulatory program (hereinafter referred to as the Arkansas program) under the Surface Mining Control and Reclamation Act of 1977 (SMCRA). The amendment concerns applicability, definitions, coal exploration, probable hydrologic consequences (PHC) determinations, hydrology, transportation and support facilities, bonding; roads, impoundments, coal mine waste impounding structures, and revegetation. The amendment revises Arkansas' rules to be consistent with the corresponding Federal regulations.

**EFFECTIVE DATE:** July 18, 1991.

**FOR FURTHER INFORMATION CONTACT:** James H. Moncrief, Director, Tulsa Field Office, Office of Surface Mining Reclamation and Enforcement, 5100 E. Skelly Drive, suite 550, Tulsa, Oklahoma 74135, Telephone: (918) 581-6430.

**SUPPLEMENTARY INFORMATION:**

### I. Background

The Arkansas program was conditionally approved by the Secretary of the Interior on November 21, 1980. Information on the general background, modifications and amendments to the proposed permanent program submission, as well as the Secretary's findings, the disposition of comments, and detailed explanation of the conditions of approval of the Arkansas program was published in the November 21, 1980, **Federal Register** (45 FR 77003). Subsequent actions concerning the Arkansas program and program amendments can be found at 30 CFR 904.12 and 904.15.

### II. Submission of Program Amendment

In accordance with the provisions of 30 CFR 732.17(d), OSM notified Arkansas by letter dated November 8, 1989 (administrative record No. AR-373), of changes to Arkansas' approved regulatory program that were necessary to make the program no less effective than the Federal regulations promulgated between June 8, 1988, and August 30, 1989.

In response to the 30 CFR part 732 notification, Arkansas, by letter dated

September 27, 1990 (administrative record No. AR–415), submitted a proposed amendment to its approved program. The amendment concerned the following sections and topics of the rules of the Arkansas Surface Coal Mining and Reclamation Code (ASCMRC): 700.10, applicability; 701.5 and 1000(d)(2), definitions; 776.11, 815.17, and 1000(d)(8), coal exploration; 780.21, PHC determinations; 1000(d)(30) through (36), hydrology; 780.37, 780.38, and 784.27, transportation and support facilities; 800.11, bonding; 815.15, 816.150, 816.151, and 1000(d)(47), roads; 816.49, impoundments; 816.84, coal mine waste impounding structures; and 816.116, 816.117, and 1000(d)(44), revegetation.

OSM announced receipt of the proposed amendment in a notice in the October 16, 1990, publication of the **Federal Register** (55 FR 41864; administrative record No. AR–434). In that notice, OSM opened a public comment period and provided an opportunity for a public hearing on the substantive adequacy of the revisions to the proposed amendment. The public comment period closed on November 15, 1990.

During its review of the proposed amendment, OSM identified concerns relating to Arkansas' proposed applicability and revegetation rules. OSM notified Arkansas of the concerns by letter dated December 5, 1990 (administrative record No. AR–435). Arkansas responded by letter dated December 31, 1990 (administrative record No. AR–436). At that time, Arkansas withdrew the proposed applicability rule at ASCMRC 700.10(b) and revised the proposed revegetation rule at ASCMRC 816.116(b)(3).

OSM announced receipt of the revised amendment in a notice in the January 22, 1991, **Federal Register** (56 FR 2155; administrative record No. AR–446). In this notice, OSM reopened the public comment period. The reopened public comment period closed on February 6, 1991.

## III. Director's Findings

After a thorough review pursuant to SMCRA, 30 U.S.C. 1201–1328, and the Federal regulations at 30 CFR 732.15 and 732.17, the Director finds, as discussed below, that the proposed amendment as submitted by Arkansas on September 27, 1990, and as revised by it on December 31, 1990, is no less stringent than SMCRA and no less effective than the corresponding Federal regulations.

### *1. Revisions to Arkansas' Rules That Are Substantively Identical to the Corresponding Federal Regulations*

For the following rules, Arkansas proposes revisions containing language that (1) is the same as the corresponding Federal regulations, (2) is similar to and substantively identical to the corresponding Federal regulations, or (3) adds specificity without adversely affecting other aspects of the program.

ASCMRC 700.10(a), concerning the applicability of the Arkansas program to coal exploration and surface coal mining and reclamation operations (corresponding Federal regulation 30 CFR 700.11(a));

ASCMRC 701.5, concerning the definition of "road" (corresponding Federal regulation 30 CFR 701.5);

ASCMRC 776.11(b) and 815.17 (a) and (b), concerning coal exploration (corresponding Federal regulations 30 CFR 772.11(b) and 772.14);

ASCMRC 780.21(f), concerning PHC determinations (corresponding Federal regulations 30 CFR 780.21(f) and 884.14(e));

ASCMRC 780.37 (f), (g), and (h), 780.38, and 784.27, concerning transportation and support facilities (corresponding Federal regulations 30 CFR 780.37 (a) and (b), 784.24(a), 780.38, and 784.30);

ASCMRC 800.11(b)(2), concerning bonding (corresponding Federal regulation 30 CFR 800.11(b)(4));

ASCMRC 815.15(c) (2), (3), and (4), 816.150 (b)(1), (d)(1), and (f), and 816.151 (a) and (c), concerning roads (corresponding Federal regulations 30 CFR 815.15(b), 826.150 (b), (d), and (f), and 816.151 (a) and (d));

ASCMRC 816.49 (b)(7) and (c)(2), concerning impoundments (corresponding Federal regulations 30 CFR 816.49(a)(8) and 817.49(a)(8));

ASCMRC 816.84 (b)(2) and (f), concerning coal mine waste impounding structures (corresponding Federal regulations 30 CFR 816.84 (b) and (f) and 817.84 (b) and (f)); and

ASCMRC 816.116 (b)(3) and (c)(4) and 816.117, concerning revegetation (corresponding Federal regulations 30 CFR 816.116 (b) and (c), 816.117, and 817.116 (b) and (c)).

Because the proposed revisions to these Arkansas rules contain language that (1) is the same as the corresponding Federal regulations, (2) is similar to and substantively identical to the corresponding Federal regulations, or (3) adds specificity without adversely affecting other aspects of the program, the Director finds that these proposed revisions to the Arkansas program are no less effective than the corresponding Federal regulations. Therefore, the Director approves the proposed revisions.

### *2. 30 CFR 904.10(b) (1), (6), (19), (20), (21), (22), (23), (25), (31), (35), and (36), Arkansas Rules Affirmatively Disapproved in Accordance With Court Order, and ASCMRC 1000(d) (2), (8), (30), (31), (32), (33), (34), (35), (36), (44), and (47)*

In the **Federal Register** notice announcing the Department's approval of Arkansas' original program, the Secretary at 30 CFR 904.10(b) affirmatively disapproved several provisions of Arkansas' program that incorporated suspended or remanded Federal regulations (45 FR 77015, Nov. 21, 1980). The affirmative disapprovals were based upon an order of the U.S. District Court for the District of Columbia that the Secretary "affirmatively disapprove * * * those segments of a State program that incorporate a suspended or remanded regulation" (*In re: Permanent Surface Mining Regulation Litigation*, 19 ERC 1477, 1500 (May 16, 1980)).

On August 15, 1980, however, the court partly stayed its May 16, 1980, order and allowed the Secretary to approve State program provisions similar to remanded or suspended Federal regulations when the State adopted such provisions in a rulemaking or legislative proceeding which occurred before the enactment of SMCRA or after the date of the District Court decision (May 16, 1980), since such State rules clearly were not based solely upon the suspended or remanded Federal regulations. In addition, the court stated that the Secretary need not affirmatively disapprove provisions based upon suspended or remanded Federal regulations if a responsible State official requested the Secretary to approve them.

As discussed below, the Director finds, consistent with the court decisions, that certain affirmative disapprovals at 30 CFR 904.10 are no longer necessary, and he is taking this opportunity to remove them. The Director also is approving Arkansas' proposed deletions at ASCMRC 1000(d), which are the State counterparts to the removed affirmative disapprovals.

The Director's decision to remove these Federal affirmative disapprovals at this time is consistent with the court's August 15, 1980, ruling in that (1) Arkansas' rules are based on revised Federal regulations, not on the remanded 1979 language, and (2) in submitting the amendment, the head of the Arkansas regulatory authority

specifically requested approval of the proposed rules.

30 CFR 904.10(b)(1) and (6) and ASCMRC 1000(d)(2) and (8)

In this amendment, Arkansas proposes revisions to its rules at ASCMRC 701.5, definition of "road," and 776.11(b), coal exploration. As discussed in finding No. 1, these proposed rules are no less effective than the corresponding Federal regulations at 30 CFR 701.5 and 722.11(b). Consistent with the court's decision, the Director is removing the associated affirmative disapprovals at 30 CFR 904.10(b)(1) and (6).

In this amendment, Arkansas also proposes to delete ASCMRC 1000(d)(2) and (8), which correspond to the Federal affirmative disapprovals at 30 CFR 904.10(b)(1) and (6). The Director finds the proposed deletion of ASCMRC 1000(d)(2) and (8) to be consistent with the removal of the associated affirmative disapprovals; and, therefore, approves Arkansas' proposed deletions at ASCMRC 1000(d)(2) and (8).

30 CFR 904.10(b)(19), (21), (22), (23), (24), (31), and (35), and ASCMRC 1000(d)(30), (32), (33), (34), (35), (44), and (47)

By letter dated May 1, 1987 (administrative record No. AR-318), Arkansas submitted to OSM a proposed amendment revising its rules at ASCMRC 816.42(a)(7), effluent standards; 816.46(b), (c), (d), and (h), sediment ponds; 816.216(b), revegetation success standards; and 816.150 and 816.151, roads. The Director approved these proposed rules in the March 28, 1988, **Federal Register** (53 FR 9881) and codified the approval of them at 30 CFR 904.15(d). Consistent with the court's decision, the Director removed the associated affirmative disapprovals for the approved rules at 30 CFR 904.10(b)(19), (21), (22), (23), (24), (31), and (35) in the November 23, 1990, **Federal Register** (55 FR 48835).

In this amendment, Arkansas proposes to delete ASCMRC 1000(d)(30), (32), (33), (34), (35), (44), and (47), which correspond to the affirmative disapprovals at 30 CFR 904.10(b)(19), (21), (22), (23), (24), (31), and (35). The Director finds the proposed deletions to be consistent with the previous removal of the associated affirmative disapprovals; and, therefore, approves Arkansas' proposed deletions at ASCMRC 1000(d)(30), (32), (33), (34), (35), (44), and (47).

30 CFR 904.10(b)(20) and (36), and ASCMRC 1000(d)(31) and (36)

By letter dated May 1, 1987 (administrative record No. AR-318), Arkansas submitted to OSM a proposed amendment revising its rules at ASCMRC 816.42(b), effluent standards, and 816.52(a)(1), ground-water monitoring. The Director approved these proposed rules in the March 28, 1988, **Federal Register** (53 FR 9881) and codified the approval of them at 30 CFR 904.15(d). The Director is, at this time, removing the associated affirmative disapprovals for these rules at 30 CFR 904.10(b)(20) and (36).

In this amendment, Arkansas proposes to delete ASCMRC 1000(d)(31) and (36), which correspond to the Federal affirmative disapprovals at 30 CFR 904.10(b)(20) and (36). The Director finds the proposed deletions to be consistent with the removal of the associated affirmative disapprovals; and, therefore, approves Arkansas' proposed deletions at ASCMRC 1000(d)(31) and (36).

## IV. Public and Agency Comments

### *1. Public Comments*

The Director solicited public comments on the proposed amendment and provided opportunity for a public hearing. No comments were received. Because no one requested an opportunity to testify at a public hearing, no hearing was held.

### *2. Agency Comments*

Pursuant to 30 CFR 732.17(h)(11)(i), OSM solicited comments from various Federal and State agencies with an actual or potential interest in the Arkansas program.

By letter dated October 11, 1990, the U.S. Bureau of Land Management commented that the proposed amendment would not unduly impact its management responsibilities (administrative record No. AR-421).

By telephone conversation on October 22, 1990, the U.S. National Park Service responded that it had no comments on the proposed amendment (administrative record No. AR-422).

By letters dated October 27 and November 7, 1990, the U.S. Soil Conservation Service concurred with the proposed amendment (administrative record Nos. AR-423 and AR-427).

By letter dated November 8, 1990, the U.S. Army Corps of Engineers responded that it had no comments on the proposed amendment (administrative record No. AR-428).

### *3. Environmental Protection Agency (EPA) Concurrence*

Pursuant to 30 CFR 732.27(h)(11)(ii), OSM solicited concurrence from EPA (administrative record No. AR-435) for those aspects of the proposed amendment that relate to air or water quality standards promulgated under the authority of the Clean Water Act and the Clean Air Act.

By letter dated November 8, 1990, (administrative record No. AR-429), OSM received from the EPA concurrence for those aspects of the proposed amendment that relate to air or water quality standards promulgated under the authority of the Clean Water Act and the Clean Air Act. However, EPA qualified its concurrence to the extent that Arkansas' rules should not be interpreted so as to provide full authorization for instream treatment of point source discharges.

EPA noted certain situations related to instream treatment which could result in conditions that would not assure compliance with applicable State water quality standards as required by the Clean Water Act. By instream treatment, EPA referred to two activities. The first activity is one in which mine wastes are discharged into waters of the United States for the primary purpose of waste disposal but with the effect of fill. The second activity involves instream waste treatment impoundments. These impoundments are built in waters of the United States for the purpose of creating a waste treatment system. Such impoundments may be used for the chemical treatment of mine waste water as well as solids settling.

EPA's definition of "waters of the United States" at 40 CFR 122.2 includes not only perennial, but also intermittent and ephemeral streams. EPA noted that the creation of any impoundments or sediment ponds in waters of the United States does not itself remove those waters from the definition of "waters of the United States" under the Clean Water Act. The Clean Water Act requires that all discharges of pollutants from point sources into waters of the United States obtain a permit as appropriate under either section 402 or 404 of the Clean Water Act.

The Director acknowledges that nothing in SMCRA supercedes the requirements of the Clean Water Act. The Director's approval of Arkansas' proposed rules should not be construed to authorize any actions inconsistent with the Clean Water Act. Additionally, Arkansas submitted to OSM a letter, dated May 20, 1991, noting that ASCMRC Rule 816.41(c) states that, "[i]n no case shall Federal and State water quality statutes, regulations, standards, or effluent limitations be violated." Arkansas stated that this rule "would clearly preclude any violation of EPA's

Clean Water Act." Therefore, Arkansas has satisfied EPA's concern regarding instream treatment.

*4. State Historic Preservation Officer (SHPO), Advisory Council on Historic Preservation (ACHP), and Arkansas Historic Preservation Program (AHPP) Comments.*

Pursuant to 30 CFR 732.17(h)(4), all amendments that may have an effect on historic properties are to be provided to the SHPO and ACHP for comment. OSM solicited comments from these offices. Neither the SHPO nor ACHP responded.

By letter dated October 29, 1990, AHPP responded that it had no objection to the proposed amendment (administrative record No. AR-425).

**V. Director's Decision**

Based on the above findings, the Director is (1) approving the proposed amendment as submitted by Arkansas on September 27, 1990, and as revised by it on December 31, 1990, and (2) removing the affirmative disapprovals at 30 CFR 904.10(b) (6), (20), and (36). The Director is approving the proposed rules with the provision that they be fully promulgated in identical form to the rules submitted to and reviewed by OSM and the public.

The Federal regulations at 30 CFR Part 904 codifying decisions concerning the Arkansas program are being amended to implement this decision. This final rule is being made effective immediately to expedite the State program amendment process and to encourage States to bring their programs into conformity with the Federal standards without undue delay. Consistency of State and Federal standards is required by SMCRA.

**VI. Procedural Requirements**

*1. Compliance with the National Environmental Policy Act*

The Secretary has determined that pursuant to Section 702(d) of SMCRA, 30 U.S.C. 1292(d), no environmental impact statement need be prepared on this rulemaking.

*2. Executive Order No. 12291 and the Regulatory Flexibility Act*

On July 12, 1984, the Office of Management and Budget (OMB) granted OSM an exemption from sections 3, 4, 7, and 8 of Executive Order 12291 for actions directly related to approval or conditional approval of a State regulatory program. Accordingly, this action is exempt from preparation of a Regulatory Impact Analysis and regulatory review by OMB.

The Department of the Interior has determined that this rule will not have a significant economic effect on a substantial number of small entities under the Regulatory Flexibility Act (5 U.S.C. 601 *et seq.*). This rule will not impose any new requirements; rather, it will ensure that existing requirements established by SMCRA and the Federal regulations will be met by the State.

*3. Paperwork Reduction Act*

This rule does not contain information collection requirements which require approval by OMB under 44 U.S.C. 3507.

**List of Subjects in 30 CFR Part 904**

Intergovernmental relations, Surface mining, Underground mining.

Dated: July 10, 1991.

**Raymond L. Lowrie,**

*Assistant Director, Western Support Center.*

For the reasons set out in the preamble, title 30, chapter VII, subchapter T, of the Code of Federal Regulations is amended as set forth below:

## PART 904—ARKANSAS

1. The authority citation for part 904 continues to read as follows:

Authority: 30 U.S.C. 1201 *et seq.*

**§ 904.10 [Amended]**

2. Section 904.10 is amended by removing and reserving paragraphs (b) (1), (6), (20), and (36).

3. Section 904.15 is amended by adding paragraph (i) to read as follows:

**904.15 Approval of amendments to State regulatory program.**

* * * * *

(i) The revisions to the following sections of the Arkansas Surface Mining and Reclamation Code (ASCMRC) as submitted to OSM on September 27, 1990, and revised on December 31, 1990, are approved effective July 18, 1991. ASCMRC 700.10(a), applicability of the Arkansas program to coal exploration and surface coal mining and reclamation operations; ASCMRC 701.5, the definition of "road;" ASCMRC 776.11(b) and 815.17 (a) and (b), coal exploration; ASCMRC 780.21(f), PHC determinations; ASCMRC 780.37 (f), (g), and (h), 780.38, and 784.27, transportation and support facilities; ASCMRC 800.11(b)(2), bonding; ASCMRC 815.15(c) (2), (3), and (4), 816.150 (b)(1), (d)(1), and (f), and 816.152 (a) and (c), roads; ASCMRC 816.49 (b)(7) and (c)(2), impoundments; ASCMRC 816.84 (b)(2) and (f), coal mine waste impounding structures; ASCMRC 816.116 (b)(3) and (c)(4) and 816.117, revegetation; and ASCMRC 1000(d) (2), (8), (30), (31), (32), (33), (34), (35), (36), (44), and (47), affirmative disapprovals.

[FR Doc. 91-17096 Filed 7-17-91; 8:45 am]

BILLING CODE 4310-05-M

## DEPARTMENT OF DEFENSE

### Office of the Secretary

### 32 CFR Parts 192 and 301

**[DoD Instruction 1100.16]**

### Equal Opportunity in Off-Base Housing

**AGENCY:** Office of the Secretary, DoD.

**ACTION:** Final rule amendment.

**SUMMARY:** This document redesignates part 301 and part 192. The purpose of this redesignation is to make administrative changes within chapter I of title 32 of the Code of Federal Regulations for ease of use.

**EFFECTIVE DATE:** July 18, 1991.

**FOR FURTHER INFORMATION CONTACT:** L.M. Bynum, Correspondence and Directives Directorate, Washington Headquarters Services, Pentagon, Washington, DC 20301-1155, telephone 703-697-4111.

**SUPPLEMENTARY INFORMATION:**

**List of Subjects in 32 CFR Parts 192 and 301**

Administrative practice and procedure, Fair housing, Government employees, Military personnel, Reporting and recordkeeping requirements.

Accordingly, under the authority of 10 U.S.C. 131, 32 CFR chapter I, is amended as follows:

## PART 301—[REDESIGNATED AS PART 192]

1. Part 301 is redesignated as part 192 and placed in subchapter M.

**§ 192.1 [Amended]**

2. Newly designated § 192.1(a) is amended by revising "301" to read and "192"

**§ 192.2 [Amended]**

3. Newly designated § 192.2 is amended by revising "§ 301.3" to read "§ 192.3".

**§ 192.4 [Amended]**

4. Footnote 1 to § 192.4 is amended by removing the last sentence.

**§ 192.5 [Amended]**

5. Footnote 2 to § 192.5 is revised to read "See footnote 1 to § 192.4".

**§ 192.6 [Amended]**

6. Footnote 3 to § 192.6 is revised to read "See footnote 1 to § 192.4".

Dated: July 11, 1991.

L.M. Bynum,

*Alternate OSD Federal Register Liaison Officer, Department of Defense.*

[FR Doc. 91-16857 Filed 7-17-91; 8:45 am]

BILLING CODE 3810-01-M

## 32 CFR Parts 195 and 300

**[DoD Directive 5500.11]**

## Nondiscrimination in Federally Assisted Programs

**AGENCY:** Office of the Secretary, DoD.

**ACTION:** Final rule.

**SUMMARY:** This document redesignates part 300 as part 195. The purpose of this redesignation is to make administrative changes within chapter I of title 32 of the Code of Federal Regulations for ease of use.

**EFFECTIVE DATE:** July 18, 1991.

**FOR FURTHER INFORMATION CONTACT:** L.M. Bynum, Correspondence and Directives Directorate, Washington Headquarters Services, Pentagon, Washington, DC 20301-1155, telephone 703-697-4111.

**SUPPLEMENTARY INFORMATION:**

**List of Subjects in 32 CFR parts 195 and 300**

Civil rights.

Accordingly, under the authority of 10 U.S.C. 131, 32 CFR chapter I, is amended as follows:

## PART 300—[REDESIGNATED AS PART 195]

1. Part 300 is redesignated as part 195 and placed in subchapter M.

**§ 195.3 [Amended]**

2. Newly designated § 195.3 is amended by revising "300.4(b)(5)" to read "195.4(b)(5)".

**§ 195.5 [Amended]**

3. Newly designated § 195.5 is amended in paragraph (b) by revising "§ 300.2(b)" to read "§ 195.2(b)" and in paragraph (c) by revising "§ 300.11" to read "§ 195.11".

**§ 195.8 [Amended]**

4. Newly designated § 195.8(d)(1) is amended by revising "300.9" to read "195.9".

**§ 195.9 [Amended]**

5. Newly designated § 195.9 is amended in paragraph (b) by revising "§ 300.6" to read "§ 195.6" each time it appears; paragraph (c)(2) by revising "§ 300.10" to read "§ 195.10"; and paragraph (c)(3) by revising "§ 300.11" to read "§ 195.11".

**§ 195.10 [Amended]**

6. Newly designated § 195.10 is amended in paragraph (a) by revising "§ 300.9" to read "§ 195.9" and in (a)(2) by revising "§ 300.11(c)" to read "§ 195.11(c)"; and paragraph (f) by revising "§ 300.11" to read "§ 195.11".

**§ 195.11 [Amended]**

7. Newly designated § 195.11(c) is amended by revising "300.10(a)" to read "195.10(a)".

Dated: July 11, 1991.

L.M. Bynum,

*Alternate OSD Federal Register Liaison Officer, Department of Defense.*

[FR Doc. 91-16856 Filed 7-17-91; 8:45 am]

BILLING CODE 3810-01-M

## 32 CFR Part 199

## Civilian Health and Medical Program of the Uniformed Services; Correction

**AGENCY:** Office of the Secretary of Defense, DoD.

**ACTION:** Final rule; correction.

**SUMMARY:** On June 21, 1991, the Department of Defense published a final rule in the **Federal Register** (56 FR 28486) concerning civilian health and medical program of the uniformed services. This document is published as an administrative correction for clarity.

**EFFECTIVE DATE:** April 1, 1991.

**FOR FURTHER INFORMATION CONTACT:** L.M. Bynum, Correspondence and Directives Directorate, Washington Headquarters Services, Pentagon, Washington, DC 20301-1155, (703) 697-4111.

## PART 199—CIVILIAN HEALTH AND MEDICAL PROGRAM OF THE UNIFORMED SERVICES

The amendatory language for number 3, page 28487, third column, is amended by removing the words "proposed to be"

Dated: July 11, 1991.

L.M. Bynum,

*Alternate OSD Federal Register Liaison Officer, Department of Defense.*

[FR Doc. 91-16855 Filed 7-17-91; 8:45 am]

BILLING CODE 3810-01-M

## 32 CFR Part 286b

**[OSD Administrative Instruction No. 81]**

## Privacy Program

**AGENCY:** Office of the Secretary, Defense.

**ACTION:** Final rule.

**SUMMARY:** The Office of the Secretary of Defense, Office of the Joint Staff is publishing as a final rule a general exemption (j)(2) that will exempt a record system from certain provisions of the Privacy Act of 1974, as amended, (5 U.S.C. 552a).

**EFFECTIVE DATE:** July 18, 1991.

**FOR FURTHER INFORMATION CONTACT:** Mr. Dan Cragg, Chief, Records Management and Privacy Act Branch, Office of the Secretary of Defense, room 5C315, The Pentagon, Washington, DC 20301-1155. Telephone (703) 695-0970.

**SUPPLEMENTARY INFORMATION:** On December 27, 1990, at 55 FR 53177, the Office of the Secretary of Defense, Office of the Joint Staff published a proposed exemption rule for a new record system identified as JS006.CND, entitled "USSOUTHCOM Counter Narcotics Database" under the provision of the Privacy Act of 1974, as amended, (5 U.S.C. 552a). During the thirty day public comment period, comments were received which questioned the (j)(2) exemption because USSOUTHCOM is not a law enforcement agency.

The following is provided in support of the (j)(2) exemption. In the FY89 National Defense Authorization Act, Public Law 100-456, title XI, Interdiction and Law Enforcement Support, the DoD was designated the lead agency for the detection and monitoring of all aerial and maritime transit of illegal drugs into the United States. Further, Congress directed the DoD integrate command, control, communications, and technical intelligence assets dedicated to the interdiction of illegal drugs into an effective communications network. The Office and National Drug Control Policy has emphasized that this mission requires the cooperation of all federal agencies involved in the counter narcotics effort and will require the sharing of information among the agencies. The subject system will connect all Joint CINCS, JCS, DIA, DoD, NSA, CIA, Department of State, FBI, and the Drug Enforcement Administration. This system will be used to pass information between federal law enforcement agencies. Also, the law enforcement agency which provides the information is responsible for

determining who is authorized access to the data and how long it should reside in the computer. All information retrievable by name or personal identifier on this database will be extracted from records of the connected federal law enforcement agencies whose databases are already afforded the (j)(2) exemption.

Clearly, Congress, by its language in the National Defense Authorization Act, intended DoD to be a law enforcement agency for the purpose of countering the illegal drug threat to the United States. The USSOUTHCOM CN/C3I system is established as a result of the specific direction of the Congress in the National Defense Authorization Act and serves as a clearing house for the law enforcement agencies involved in counter narcotic operations. USSOUTHCOM does not "own" the record. It only receives, integrates, and distributes the records to the routine users. USSOUTHCOM can be likened to a contractor for the law enforcement agencies whose mission is to maintain the records. Use of the (k)(2) exemption would imply that either DoD or USSOUTHCOM is a user of the information, which neither is. To deny a (j)(2) exemption to this system would be contrary to the clear intent of the President and the Congress in this vital mission.

Therefore, this general exemption rule is to be added to existing OSD exemption rules found at 32 CFR 286b.7.

**List of Subjects in 32 CFR Part 286b**

Privacy.

Accordingly, the Office of the Secretary of Defense amends 32 CFR part 286b as follows:

## PART 286b—PRIVACY PROGRAM

1. The authority citation for 32 CFR part 286b continues to read as follows:

**Authority:** Privacy Act of 1974, Pub. L. 93-579, 88 Stat. 1896 (5 U.S.C. 552a)

---

2. § 286b.7 is amended by adding a new paragraph (b)(2) as follows:

**§ 286b.7 Procedures for exemptions.**

* * * * *

(b) *General exemptions.* * * *

(2) *System Identification and Name*—JS006.CND, USSOUTHCOM Counter Narcotics Database.

*Exemption*—Portions of this system that fall within 5 U.S.C. 552a(j)(2) are exempt from the following provisions of 5 U.S.C. 552a, section (c) (3) and (4); (d)(1) through (d)(5); (e)(1) through (e)(3); (e)(4)(G) and (e)(4)(H); (e)(5); (f)(1) through (f)(5); (g)(1) through (g)(5) of the Act.

**Authority:** 5 U.S.C. 552a(j)(2).

*Reason*—From subsection (c)(3) because the release of accounting of disclosure would inform a subject that he or she is under investigation. This information would provide considerable advantage to the subject in providing him or her with knowledge concerning the nature of the investigation and the coordinated investigative efforts and techniques employed by the cooperating agencies. This would greatly impede USSOUTHCOM's criminal law enforcement.

For subsections (c)(4) and (d) because notification would alert a subject to the fact that an investigation of that individual is taking place, and might weaken the on-going investigation, reveal investigatory techniques, and place confidential informants in jeopardy.

From subsections (e)(4) (G) and (H) because this system of records is exempt from the access provisions of subsection (d) pursuant to subsection (j).

From subsection (f) because the agency's rules are inapplicable to those portions of the system that are exempt and would place the burden on the agency of either confirming or denying the existence of a record pertaining to a requesting individual might in itself provide an answer to that individual relating to an on-going criminal investigation. The conduct of a successful investigation leading to the indictment of a criminal offender precludes the applicability of established agency rules relating to verification of record, disclosure of the record to that individual, and record amendment procedures for this record system.

For compatibility with the exemption claimed from subsection (f), the civil remedies provisions of subsection (g) must be suspended for this record system. Because of the nature of criminal investigations, standards of accuracy, relevance, timeliness and completeness cannot apply to this record system. Information gathered in criminal investigations is often fragmentary and leads relating to an individual in the context of one investigation may instead pertain to a second investigation.

From subsection (e)(1) because the nature of the criminal investigative function creates unique problems in prescribing a specific parameter in a particular case with respect to what information is relevant or necessary. Also, due to USSOUTHCOM's close liaison and working relationships with the other Federal, as well as state, local and foreign country law enforcement agencies, information may be received which may relate to a case under the investigative jurisdiction of another agency. The maintenance of this information may be necessary to provide leads for appropriate law enforcement purposes and to establish patterns of activity which may relate to the jurisdiction of other cooperating agencies.

From subsection (e)(2) because collecting information to the greatest extent possible directly from the subject individual may or may not be practicable in a criminal investigation. The individual may choose not to provide information and the law enforcement process will rely upon significant information about the subject from witnesses and informants.

From subsection (e)(3) because supplying an individual with a form containing a Privacy Act Statement would tend to inhibit cooperation by many individuals involved in a criminal investigation. The effect would be somewhat inimical to established investigative methods and techniques.

From subsection (e)(5) because the requirement that records be maintained with attention to accuracy, relevance, timeliness, and completeness would unfairly hamper the criminal investigative process. It is the nature of criminal law enforcement for investigations to uncover the commission of illegal acts at diverse stages. It is frequently impossible to determine initially what information is accurate, relevant, timely, and least of all complete. With the passage of time, seemingly irrelevant or untimely information may acquire new significant as further investigation brings new details to light.

From subsection (e)(8) because the notice requirements of this provision could present a serious impediment to criminal law enforcement by revealing investigative techniques, procedures, and existence of confidential investigations.

* * * * *

Dated: July 11, 1991.

**L.M. Bynum,**

*Alternate OSD Federal Register Liaison Officer, Department of Defense.*

[FR Doc. 91-16853 Filed 7-17-91; 8:45 am]

BILLING CODE 3810-01-M

**DEPARTMENT OF HEALTH AND HUMAN SERVICES**

**Health Care Financing Administration**

**42 CFR Part 484**

**[BPD-476-F]**

**RIN 0938-AD45**

## Medicare Program; Home Health Agencies: Conditions of Participation

**AGENCY:** Health Care Financing Administration (HCFA), HHS.

**ACTION:** Final rule.

**SUMMARY:** This final rule responds to the major comments we received on an interim final rule that was published on August 14, 1989 (54 FR 33354). That interim final rule added requirements to the current conditions of participation for home health agencies (HHAs). Specifically, the rule specified requirements for protecting and promoting patient rights; training and competency evaluation of home health aides; notifying State entities responsible for the licensing or certification of HHAs of changes in ownership of the agency or management of the agency; including an individual's plan of care as part of the individual's clinical records; and operating and furnishing services in compliance with applicable Federal, State, and local laws and regulations and with accepted professional standards and principles that apply to professionals furnishing home health services.

Most of the provisions of the rule implemented section 930 of the Omnibus Reconciliation Act of 1980 (Pub. L. 96-499), section 4021 of the Omnibus Budget Reconciliation Act of 1987 (Pub. L. 100-203), and section 411(d) of the Medicare Catastrophic Coverage Act of 1988 (Pub. L. 100-360).

This final rule implements changes, based on our review and consideration of the public comments, concerning patient notification of changes in payment liability, requirements for evaluators and instructors of home health aides, in-service training, and supervisory visits, and clarifies other home health issues.

**EFFECTIVE DATE:** The provisions of this final rule are effective on August 19, 1991.

**FOR FURTHER INFORMATION CONTACT:** John J. Thomas (301) 966-4623.

**SUPPLEMENTARY INFORMATION:**

### I. General Background

Home health services are furnished to the elderly and disabled under Medicare. They include an array of services such as professional nursing care, physical and occupational therapy, speech pathology, medical social services, home health aide services, and medical supplies and equipment. These services are delivered singly, or in combination, to aid in the recovery from an acute illness or to improve a patient's health status.

The Medicare statute limits payment for home health services to providers of services who have qualified for a Medicare provider agreement as a home health agency (HHA). HHAs must meet all State and local licensure requirements as well as the Medicare conditions of participation. These conditions of participation apply to an HHA as an entity. In addition, as indicated in section 4021 of Public Law 100-203, they also apply to each individual under the care of the HHA, unless a condition is specifically limited to Medicare beneficiaries.

### II. The August 14, 1989 Interim Final Rule

The August 14, 1989 interim final rule added requirements to the current conditions of participation for home health agencies (HHAs). Those changes implemented the provisions of section 4021 of the Omnibus Budget Reconciliation Act of 1987 (Pub. L. 100-203, enacted on December 22, 1987). The rule specified requirements for protecting and promoting patient rights; training and competency of home health aides; notifying State entities responsible for the licensing or certification of HHAs of changes in ownership of the agency or management of the agency; including an individual's plan of care as part of the individual's clinical records; and operating and furnishing services in compliance with applicable Federal, State, and local laws and regulations and with accepted professional standards and principles that apply to professionals furnishing home health services. The preamble to the interim final rule (54 FR 33355) explains in detail the statutory provisions and regulation requirements that were implemented by that rule.

In addition to the provisions identified above, the interim final rule redesignated the conditions of participation for HHAs (42 CFR part 405, subpart L) as new part 484. It also responded to the public comments received on a proposed rule (published on December 31, 1986 at 51 FR 47266) that included changes to reduce the information collection and recordkeeping requirements for the conditions of participation for HHAs. The changes for the reduction of information collection and recordkeeping requirements that were made in the interim final rule in response to comments received on the proposed rule, however, were not subject to formal public comment.

The interim final regulations were effective on July 1, 1989 and, except as otherwise provided, applied to services furnished by home health agencies beginning July 1, 1989. The requirement that HHAs establish a competency evaluation program for home health aides was not effective until February 14, 1990, because we recognized that the delay in the promulgation of the interim final regulations, without an extension in the effective date, would impose an unacceptable burden on HHAs and State survey agencies. The requirement that an HHA may only use as a home health aide an individual who has successfully completed a training and competency evaluation program or a competency evaluation program as provided for in these regulations is effective for home health aide services furnished after August 14, 1990.

### III. Summary of Responses to Comments on the August 14, 1989 Interim Final Rule

This summary of the public comments and our responses is limited to those comments we received on the provisions of Public Law 100-203. As stated earlier, the interim final rule contains requirements on reducing information collection for the conditions of participation for HHAs, the comments we received on December 31, 1986 proposed rule, and our responses to those comments. In the interim final rule, we requested public comments only on the changes made in response to the enactment of Public Law 100-203. While we have taken comments not related to the changes made in response to Public Law 100-203 under advisement, we have not adopted them in this final rule, nor have we responded to them in this preamble. We are unable to adopt the commenters' suggestions on requirements other than those that we specifically addressed in the interim final rule because to do so would be to adopt them without providing an opportunity for public comment. If we responded to those comments and made policy changes now, we may disadvantage those individuals and groups who did not comment, but who might have chosen to comment had we solicited comments.

Concerning the changes made in response to the enactment of Public Law 100-203, we received comments from 82 commenters, including professional organizations and associations, HHAs,

public health departments, State governmental agencies, universities, and private individuals. A summary of those comments and our responses follow.

*Personnel Qualifications (Section 484.4)*

This section sets forth the qualifications requirements that must be met by HHA personnel.

*Comment:* Several commenters believe the definition of "home health aide" is unclear regarding the requirement that aides who have not furnished services for 24 consecutive months are not considered to have passed a training program and competency evaluation program or competency evaluation program (§484.4).

*Response:* Under the existing regulations, an individual who has not furnished home health aide services for compensation for a period of 24 consecutive months is not considered to have completed a training and competency evaluation program or competency evaluation program. Therefore, any individual who has not been employed as a home health aide at any time in the previous 24 months, regardless of whether a training and competency evaluation program or competency evaluation program has been completed, successfully complete a training and competency evaluation program before furnishing home health aide services again. We believe this requirement, which is based on section 1891(a)(3)(A) of the Act, is sufficiently clear in the existing regulations.

*Condition of Participation: Patient Rights (Section 484.10)*

This condition implements the patient rights' provisions of section 1891(a) of the Act. It sets forth certain rights to which home health patients are entitled and requires that the HHA inform each patient of these rights and also to recognize and protect them.

*Comment:* Several commenters expressed support for the effort to promote and protect patient rights, but disagreed with certain provisions of the regulations. Specifically, commenters stated it is too difficult to provide patients with the payment disclosures required by the regulations (concerning sources of payment and financial liability) before furnishing care. They believe it is impractical to provide patients with advance notice of any changes in the care that is to be furnished. Several commenters believe it would be of more benefit to the patient and easier for the agency to provide a patient with a disclosure of rights at some time after their initial visit. Also, they believe the State should be responsible for making patients aware of the home health hotline.

*Response:* We appreciate the concern that has been expressed about the amount of effort that will be required to provide patients with a comprehensive disclosure of their rights, including their right to be made aware of the home health hotline. Nevertheless, these regulations reflect (essentially verbatim) statutory requirements contained in section 1891(a) of the Act, which we do not have the authority to revise.

*Comment:* Several commenters believe requiring the HHA to be able to document that a patient was given the notice of rights as required in § 484.10(a)(2) was overly burdensome and requires clarification.

*Response:* We do not believe the requirement to maintain documentation is overly burdensome. We believe it is the most efficient method for surveyors to ascertain whether patients have, in fact, been informed of their rights. Although we do not intend to dictate a specific method of documentation that the HHA must follow to comply with this requirement, we believe, for example, a copy of a document that specifically states the rights of the patient as required by the regulation, which has been signed and dated by the patient or the patient's guardian (and a copy of which has been left at the patient's residence), will fulfill the requirements of § 484.10(a)(2).

*Comment:* Three commenters requested we clarify the requirement that each patient has the right to have his or her property treated with respect (§ 484.10(b)(3)).

*Response:* The intent of this requirement is that no individual performing services on behalf of the HHA will use, remove, alter, or consume any item belonging to the patient without the expressed consent of the patient. We do not believe it is necessary to revise the language in § 484.10(b)(3).

*Comment:* One commenter believes the requirement that an HHA investigate complaints made by a patient and document both the existence of the complaint and its resolution (§ 484.10(b)(5)) exceeds statutory authority.

*Response:* As was stated in the preamble to the August 14, 1989 interim final rule (54 FR 33356), we believe, in specifically vesting home health patients with the right to voice grievances, Congress also intended that these grievances be addressed by the HHA. The overall intent of Congress (and § 484.10) in enacting these requirements is to ensure the provision of appropriate and good quality home health care. To allow patients to voice grievances about care without also requiring the HHA to investigate and resolve these complaints, would fail to ensure quality care and would be contrary to the intent of Congress. The legislative history indicates that the right to voice grievances would help ensure the delivery of quality home health services (H.R. Rep. 391, 100th Cong., 1st. Sess. 412 (1987).)

If an HHA makes a good faith effort to investigate a complaint and finds that it is either baseless or beyond its control to resolve, we will expect the HHA to document this finding, as well as the rationale for it, in the patient's file.

*Comment:* One commenter believes the requirement that the patient has the right to confidentiality of the clinical records maintained by the HHA in § 484.10(d) is not sufficiently detailed.

*Response:* We believe a detailed requirement for this provision is not necessary. Each individual HHA is best qualified to implement a policy protecting the confidentiality of its patients' clinical records that best suits the unique needs of its patients and recordkeeping system.

*Comment:* Several commenters stated that the 15 working days in which an HHA must inform patients orally and in writing of any changes in the payment disclosure as required by § 484.10(e)(2) does not allow sufficient time for the HHA to properly assess the changes and disclose them to the patient.

*Response:* After considering these comments, we recognize the potentially detailed nature of any disclosures that are required by § 484.10(e)92). Therefore, we have revised that section to read as follows: "The HHA must advise the patient of these changes as soon as possible, but no later than 30 calendar days from the date the HHA becomes aware of a change." We believe this additional period of time will allow the HHA to more easily and accurately assess changes and disclose them both orally and in writing to the patient.

*Condition of Participation: Compliance With Federal, State, and Local Laws, Disclosure and Ownership Information, and Accepted Professional Standards and Principles (Section 484.12)*

This condition sets forth requirements for HHA compliance with Federal, State, and local laws and regulations, disclosure of ownership and management information, and accepted professional standards and principles.

*Comment:* One commenter objected to § 484.12(a), which states "If State or applicable local law provides for the licensure of HHAs, an agency not

subject to licensure is approved by the licensing authority as meeting the standards established for licensure."

*Response:* This has been our longstanding interpretation of the statutory requirement contained in section 1861(o)(4) of the Act. We believe it is accurate and requires no revisions.

*Comment:* Several commenters believe requiring HHAs to disclose changes in ownership or management to the State at the time they occur (§ 484.12(b)) is overly burdensome, especially for non-profit HHAs.

*Response:* This requirement is set forth explicitly in section 1891(a)(2) of the Act. We do not have authority to revise a statutory requirement.

*Comment:* Several commenters requested clarification of the terms "professional standards and principles" and "managing employee".

*Response:* Section 484.12(c) requires the HHA to comply with "accepted professional standards and principles that apply to professionals furnishing services in an HHA." This means the accepted standards and principles that govern the individual professional furnishing services on behalf of the HHA (such as a registered nurse or physical therapist) must be followed. These standards are typically developed by professional associations of nurses, therapists, or other professionals and establish the standards of practice for competent persons serving in a particular professional role. We did not intend to bind HHAs to following principles and practices outlined in general accreditation programs such as those established by the Community Health Accreditation Program and the Joint Commission on the Accreditation of Health Organizations. We do not believe revisions to the existing regulations are necessary.

"Managing employee" is defined in § 420.201 as a "general manager, business manager, administrator, director, or other individual who exercises operational or managerial control over, or who directly or indirectly conducts, the day-to-day operation of the institution, organization, or agency." Since § 484.12(b) refers to the definition in § 420.201, we do not believe it is necessary to revise this section.

*Condition of Participation: Acceptance of Patients, Plan of Care, and Medical Supervision (Section 484.18)*

This condition sets forth requirements for the content and review of the plan of care as well as conformance with physician's orders.

*Comment:* Two commenters stated it should not always be necessary for the physician to review the plan of care. They believe this review could be adequately performed by other appropriate professionals.

*Response:* This requirement (§ 484.18(b)) is specifically mandated by section 1861(m) of the Act and, therefore, is not subject to revision.

*Condition of Participation: Home Health Aide Services (Section 484.36)*

This condition sets forth the requirements for the training, evaluation, assignment, and supervision of home health aides.

*Comment:* One commenter requested that oral examinations be acceptable as part of the competency evaluation.

*Response:* We agree with the commenter. The subject areas listed in §§ 484.36(a)(1)(iii), (ix), (x), and (xi) must be evaluated after observation of the aide's performance of the task with a patient. We believe observation of the aide's performance is reasonable and necessary to assure the aide's competency in these areas. As stated in § 484.36(b)(3)(iii), the remaining evaluation criteria may be in the form of an oral examination. We do not believe it is necessary to revise the regulations.

*Comment:* One commenter requested we remove the requirement that an aide receive 16 hours of classroom training before beginning supervised practical training (§ 484.36(a)(1)).

*Response:* We have not accepted this comment. We believe it is necessary for the home health aide to receive a basic understanding of the nature of the duties and responsibilities of a home health aide through classroom instruction before receiving instruction on furnishing hands-on care to an individual.

*Comment:* One commenter believes the 16-hour supervised practical training portion of the aide training program should be conducted in a patient's home (§ 484.36(a)(1)).

*Response:* We believe requiring HHAs to conduct 16 hours of practical training in their patients' homes would be impractical and present an undue burden on HHAs and other organizations conducting training programs as well as the patients whose homes would be used for this purpose. We believe a home setting can adequately simulate a patient's home and, therefore, this portion of the training can be adequately conducted in a laboratory or other setting.

*Comment:* Several commenters requested that we clarify the process by which training and evaluation programs are approved. They suggested that HCFA establish a process by which programs offered by non-HHAs (for example, community colleges) are approved to be in compliance with the statutory requirements.

*Response:* The HHAs are responsible for maintaining documentation that their home health aides meet the requirements of this condition (§ 484.36(a)(3)). This requirement includes aides trained by other HHAs or other organizations, and those hired by the HHA under arrangement as well as those employed directly by the HHA. While HCFA will not establish a national program to approve each home health aide training and competency evaluation program (including those programs furnished by organizations other than HHAs), the files of a sample of home health aides used by a particular HHA will be reviewed for documentation of compliance with the training and competency evaluation requirements for home health aides during a standard and extended survey of the HHA. The HHA must document that the training and competency evaluation program or competency evaluation program that the aide completed meets the requirements in the regulations. It is ultimately the responsibility of the HHA to ascertain whether its aides meet the requirements of this condition. We believe the current regulations adequately address this issue.

*Comment:* Several commenters objected to the requirements at §§ 484.36(a)(2) and 484.36(b)(3), which prohibit the approval of training and competency evaluation programs offered by or in any HHA that is out of compliance with any of the requirements for participation in part 484 within any of the 24 months before the training program is to begin. Most of the commenters believe these requirements are too harsh.

*Response:* We have revised this section to conform with statutory revisions recently made by section 4207(j) of the Omnibus Budget Reconciliation Act of 1990 (Pub. L. 101-508, enacted on November 4, 1990). This section, which takes effect as if included in the enactment of Public Law 100-203, allows for a home health aide training and/or competency evaluation program to be conducted by any organization, except those HHAs that, within the previous 2 years, have been determined to be out of compliance with the home health aide training and/or competency evaluation requirements; have been subject to an extended (or partial extended) survey; have been assessed a civil money penalty of not less than $5000; have had a temporary management appointed under section

1891(e) of the Act; or have had all or part of their payments suspended or terminated.

These revisions also stipulate that no HHA may offer a home health aide training and/or competency evaluation program if, under any Federal or State law within the 2-year period beginning October 1, 1988, its participation in Medicare was terminated; it was assessed a penalty of not less than $5000 for deficiencies in applicable HHA quality standards; it was subject to a suspension of all or part of the Medicare payments to which it was otherwise entitled; it operated under a temporary management appointed to oversee the operation of the HHA and to ensure the health and safety of the HHA's patients; or, as a result of State action, it was closed or had its residents transferred.

Section 4207(k) of Public Law 101-508 authorizes us to issue regulations (on an interim or other basis) to implement the requirements of section 4207(j). Therefore, we are incorporating these statutory requirements into the final regulations at § 484.36(a)(2)(i). We believe these revisions address the concerns of the commenters by clarifying which HHA may offer home health aide training and/or competency evaluation programs. However, we believe that the statute is less specific regarding the conduct of in-service training. Therefore, we have revised § 484.36(b)(3)(i) to allow all HHAs to provide the required in-service training to their aides.

*Comment:* We received many comments that the qualifications for instructors and evaluators were too strict. The commenters believe it would be difficult for many agencies to be able to find properly qualified individuals to conduct the training and evaluation of home health aides.

*Response:* After considering the comments, we have revised §§ 484.36 (a)(2)(ii) and (b)(3)(ii) to require an instructor to be a registered nurse that possesses a minimum of 2 years nursing experience, at least 1 year of which must be in directly furnishing home health care. We believe, given the type of care generally furnished by home health aides, that it requires the unique skills of a registered nurse with experience in furnishing home health care to address the training needs of aides that will be furnishing services in the home environment. We have retained the original requirement that the competency evaluation be performed by a registered nurse because we believe the requirement does not place an unreasonable hardship on those organizations conducting competency evaluations. We also believe it requires the skills and education of a registered nurse to effectively administer a competency evaluation.

*Comment:* A commenter suggested that all instructors be required to have either adult education experience or successfully complete a "Methods of Instruction" program. Another commenter also suggested we set standards for other individuals that may be used to provide instruction.

*Response:* Although we agree adult education experience would be of value to instructors and evaluators, we believe, in light of the general shortage of registered nurses that meet the existing qualifications, any additional requirements for instructor or evaluator qualifications would be an undue burden on HHAs. Similarly, we believe the registered nurse ultimately responsible for conducting the training is the best judge of the supplemental instructors that would best suit the unique needs of each group of trainees. Any additional requirements at this time are unnecessary.

*Comment:* Several commenters believe experienced or previously trained aides should be "grandfathered" or "deemed" as meeting the training and evaluation requirements without actually undergoing the training or competency evaluation program.

*Response:* Section 1891(a)(3)(A)(i) of the Act requires an HHA to not use anyone to furnish home health services unless that person has successfully completed a training and competency evaluation program or a competency evaluation program that meets the minimum standards established by the Secretary. Therefore, no statutory authority exists to "deem" an individual that has not successfully completed a competency evaluation program as having met the requirements of that section. If an individual, however, has previously completed a training and competency evaluation program or a competency evaluation program that meets the requirements of section 1891(a)(3)(A) of the Act, that individual can be considered to have met the requirements if the Secretary determines that, at the time the program was offered, the program met the standards. Therefore, if the HHA can demonstrate that a training and/or competency evaluation program that was successfully completed previous to the effective date of this rule met the standards contained in § 484.36, the aide will be considered to have met the competency requirements.

*Comment:* Several commenters believe the training and competency evaluation standards are more extensive than is necessary to assure home health aide competence and should be more specific in the actual program requirements (§ 484.36(b)).

*Response:* We do not agree that the training and competency evaluation standards are too extensive. They are closely modeled after requirements currently employed by several States and national accrediting organizations as well as the model curriculum developed by the Foundation for Hospice and Homecare. We believe less extensive standards would not be sufficient for assuring the competency of individuals furnishing home health aide services.

However, it has also been brought to our attention that, in certain States, these requirements could pose an undue hardship on those Medicare-certified HHAs that also furnish personal care attendant (PCA) services under the Medicaid program. In several States, these PCAs have already been found competent by the State in those areas of their responsibility that overlap with the areas of competency required by this regulation. The PCAs are not called upon to perform certain other services that are addressed in the home health aide competency evaluations. We believe when a PCA furnishes services on behalf of a Medicare-certified HHA exclusively as a Medicaid PCA service (not as a Medicaid home health aide service) and when the PCA has also been found by the State to be competent (as required in § 484.36(b)) in those skills specified in § 484.36(a) that he or she is required to perform, the HHA is considered to have complied with the competency requirements of § 484.36(b) with respect to that PCA. That is, the PCA need only be found competent in those skills specified in § 484.36(a) that he or she actually performs in the course of duty. We believe that, in these circumstances, the PCA has already been found competent by the State in the necessary skill areas and that to require duplicative training and testing, or both, would be inefficient and place an unfair financial burden on those HHAs that participate in the Medicaid PCA program. Our recognition of the PCA competency determination is consistent with our larger goal of ensuring that paraprofessional home care services are furnished by competent individuals while reducing the unnecessary duplication of competency evaluation requirements. We have therefore revised §§ 484.4 and 484.36 to allow individuals that have satisfied State PCA competency requirements to furnish those services without having to successfully complete

a competency evaluation that meets the requirements of § 484.36(b). This recognition applies only to those individuals who exclusively furnish PCA services under the Medicaid program and who have already been found sufficiently competent by the State. If an individual also furnishes aide services (regardless of his or her job title or source of payment) in addition to the Medicaid PCA services, then he or she will be required to successfully complete a training and competency evaluation program or competency evaluation program as described in § 484.36 of this final rule. If an individual furnishes Medicaid PCA services exclusively, but has not been found competent by the State, then he or she must also successfully complete a training and competency evaluation program or competency evaluation program as described in § 484.36 of this final rule.

We also do not believe that the previously published training and evaluation standards should be revised to be more specific. The purpose of the standards, as required by the statute, is to set forth the requirements for the content of the curriculum, minimum hours of training, qualification of instructors, and procedures for determining competency. We believe the existing regulations meet this requirement while allowing the individual HHAs and training organizations to adapt the specific details of the program to the unique needs of their home health aides and patient population.

*Comment:* Several commenters objected to the requirement that home health aides receive at least 3 hours of in-service training per quarter (§ 484.36(b)(2)(iii)). They believe it is too restrictive and should be eased.

*Response:* After considering the comments, we have revised § 484.36(b)(2)(iii) to require each home health aide to receive at least 12 hours of in-service training per calendar year. We believe 12 hours of training per calendar year will provide the aides with a sufficient level of continuing education and will not place an unreasonable burden on the resources of the organization furnishing the training. As revised, we believe aides will still receive the necessary in-service training while introducing some flexibility for HHAs in scheduling and providing the training.

*Comment:* One commenter believes a home health aide who has failed to complete satisfactorily any of the sections of the competency evaluation should not be considered to have completed satisfactorily the competency evaluation. Another commenter requested clarification of the requirements concerning re-testing of aides.

*Response:* The current regulation states any aide who has failed to satisfactorily complete more than one section of the evaluation cannot be considered to have satisfactorily completed the competency evaluation and, therefore, cannot furnish home health aide services (§ 484.36(b)(4)(ii)). If an aide has failed only one section of the evaluation, he or she can be considered to have satisfactorily completed the competency evaluation but may not perform that task in which he or she was evaluated as being unsatisfactory unless the task is performed under the direct supervision of a licensed nurse (§ 484.36(b)(4)(i)). The aide may perform the task that was evaluated as unsatisfactory after undergoing re-testing in that area and receiving a satisfactory evaluation. There is no limit on the number of times that an individual may be re-tested. We believe these existing requirements are sufficient to protect patient safety and a more restrictive requirement is not necessary.

*Comment:* Several commenters requested that the effective dates be clarified and/or delayed (§ 484.36(b)(6)).

*Response:* The regulations require HHAs to implement a competency evaluation program no later than February 14, 1990. The HHA must provide the preparation necessary for the individual to successfully complete a program before the aide can furnish services after August 14, 1990. After August 14, 1990, the HHA may use only those aides that have been found to be competent in accordance with § 484.36(b). Accordingly, we have revised § 484.36(b)(6) to clarify these effective dates.

We believe the 6 month and 1 year periods between the publication of the August 14, 1989 interim final rule and the effective dates of this condition were sufficient for HHAs to implement programs that comply with the regulations. Therefore, we believe it is not necessary to further delay the effective dates.

*Comment:* Several commenters suggested we adopt an aide supervision requirement that better discriminates between the unique needs of patients who require skilled services as well as aide services and patients who are primarily in need of custodial care and receive aide services only (§ 484.36(d)).

*Response:* We agree with the commenters. We have therefore revised the supervisory requirements at § 484.36(d). In those cases when the patient is being furnished home health aide services but is not also receiving skilled nursing services or physical, speech, or occupational therapy, the registered nurse must make a supervisory visit to the patient's residence, no less frequently than every 60 days, while the aide is furnishing care. We believe this revision will provide for adequate supervision of all aides while focusing the limited nursing resources of the HHA primarily on the supervision of aides furnishing care to those patients with more severe illness or injuries whose treatment requires a closer level of supervision.

*Comment:* Several commenters believe individuals that have completed a nurse aide training and competency evaluation program should be considered to have met the requirements for home health aide training and competency evaluation.

*Response:* Regulations for nurse aide training and competency evaluation are not identical to those for home health aide training and competency evaluation. The statutory requirements for the content of nurse aide competency evaluations are far more specific than those for home health aide training and competency evaluation. Also, the functions of home health aides and nurse aides, while somewhat similar, are not identical. We believe the regulations governing the training and evaluations of the two different kinds of aides must reflect the differences in the duties that will be performed and the environments in which they will be performed. Although the nurse aide and home health aide requirements are not identical, it is conceivable that programs whose curricula and testing elements meet both sets of criteria can be developed.

*Comment:* One commenter believes the regulations should require all HHAs to screen prospective home health aides for prior records of patient abuse or other criminal behavior.

*Response:* While we certainly would not discourage HHAs from carefully screening those individuals whom they intend to hire to furnish patient care, the Medicare statute does not require HHAs to institute an employee screen as a condition of participation or to consult with the State registry as it does for nursing facilities. Therefore, we have not included this requirement in the regulations.

*Comment:* Several commenters requested that we allow HHAs to conduct aide training with mannequins and that the competency evaluation be allowed to take place in a laboratory setting.

*Response:* Since the regulation does not specifically exclude the use of mannequins in aide training or mandate the physical setting of competency evaluations, we believe it is acceptable to conduct aide training with a mannequin and to conduct competency evaluations in a laboratory setting using "pseudo-patients" such as another aide or volunteer. We do not believe it is necessary to revise the regulations to clarify this point.

*Comment:* One commenter believes therapists are not qualified to supervise home health aides that are furnishing personal care to patients.

*Response:* We believe it is reasonable to allow skilled therapists to supervise home health aides that are furnishing services to patients receiving only skilled therapy services as well as home health aide services. This allows the therapist to assess any services furnished by the aide that are an extension of the therapy services, such as routine maintenance exercise and repetitive speech routines. In those cases when the patient is receiving only personal care, a therapist may not supervise the home health aide.

## IV. Changes From the Interim Final Rule Made by This Final Rule

The changes we will make in the interim final regulations follow.

- We have revised the personnel qualifications for a "home health aide" found in § 484.4 to include competency evaluation requirements for personal care attendants.
- We have revised the personnel qualifications for a speech pathologist found in § 484.4 to read "Speech-language pathologist." We have made the same revision to § 484.32(b). This revision makes the conditions of participation consistent with current terminology.
- We have revised § 484.10(e)(2) to require HHAs to notify patients of changes in payment liability within 30 calendar days of the date the agency becomes aware of the change.
- We have revised § 484.14(c), which defines the role of an HHA administrator, to correct a typographical error that resulted in an incomplete sentence. We have revised the last sentence of paragraph (c) to read as follows: "A qualified person is authorized in writing to act in the absence of the administrator."
- We have revised §§ 484.36 (a)(2)(i) and (b)(3)(i) to clarify which organizations can be approved to offer in-service training or competency evaluation programs or both.
- We have revised §§ 484.36 (a)(2)(ii) and (b)(3)(ii) to require instructors to be registered nurses with 2 years of experience, at least 1 year of which must be in furnishing home health care.
- We have revised § 484.36(b)(2)(iii) to require 12 hours of in-service training per calendar year rather than the 3 hours per quarter that were required in the interim final rule.
- We have revised § 484.36(b)(6) to clarify the effective dates of the competency evaluation program requirements.
- We have revised § 484.36(d) to require less frequent supervisory visits to those patients receiving home health aide services but not receiving skilled nursing services or speech, physical, or occupational therapy.
- We have added § 484.36(e) to require personal care attendants who furnish personal care services on behalf of an HHA to meet competency evaluation requirements.

We have made other minor editorial changes to the final regulations to clarify our intent.

## V. Regulatory Impact Statement

### *A. Executive Order 12291*

Executive Order 12291 (E.O. 12291) requires us to prepare and publish a regulatory impact analysis for any final rule that meets one of the E.O. 12291 criteria for a "major rule"; that is, that will be likely to result in—

- An annual effect on the economy of $100 million or more;
- A major increase in costs or prices for consumers, individual industries, Federal, State, or local government agencies, or geographic regions; or
- Significant adverse effects on competition, employment, investment, productivity, innovation, or on the ability of United States based enterprises to compete with foreign-based enterprises in domestic or export markets.

We have not altered our final impact analysis from the one we published in the interim final rule of August 14, 1989. With the exception of the change being made to the supervision requirements of home health aides, the changes being made in this final rule, in our estimation, will not result in an impact that differs significantly from the one described in our initial analysis. Also, we did not receive any comments that prompted us to rethink our original analysis.

With respect to the change being made at § 484.86(d)(3) to reduce the supervision requirements of home health aides caring for patients who no longer require skilled care, this change in our policy may have a significant impact on some HHAs. However, we believe that the overall amount of the impact will not equal or exceed $100 million annually.

### *B. Regulatory Flexibility Act*

We generally prepare a regulatory flexibility analysis that is consistent with the Regulatory Flexibility Act (RFA) (5 U.S.C. 601 through 612) unless the Secretary certifies that a rule will not have a significant economic impact on a substantial number of small entities. For purposes of the RFA, all HHAs are treated as small entities.

With the exception of the change in § 484.86(d)(3), the changes being adopted in this final rule are minor and should not result in an impact that differs significantly from the one described in our initial impact analysis.

Section 484.86(d)(3) may have a significant impact on HHAs. This provision is intended to ease the administrative burden of HHAs that furnish home health aide services to patients who do not require skilled nursing services or physical, speech, or occupational therapy by reducing the required frequency of supervisory visits from once every 2 weeks to once every 60 days. Patients who do not require these skilled services are stabilized to the point of not requiring the intervention of a skilled nurse or other therapist. They may, however, still need assistance with some of the major activities of daily living, such as bathing or preparing meals. In these circumstances, aides are no longer furnishing medically-necessary care, but only custodial care. Consequently, the type of close supervision that is appropriate when patients are undergoing a specific course of treatment is not appropriate when they require only custodial care. For these reasons, we believe that a standard of one supervisory visit at least every 60 days for patients not requiring the previously mentioned skilled services is reasonable.

We are unable to determine the quantitative impact of reducing the frequency of supervisory visits because we lack the data on the number of patients receiving custodial care. Nevertheless, we believe the savings from reducing the frequency of supervisory visits under the circumstances envisioned by § 484.86(d)(3) could be significant; and we expect that most of these savings will go directly to the HHAs in the form of lower administrative costs.

The Medicare and Medicaid programs, however, may also benefit

from the reduction in these administrative expenses. Although supervisory visits are not a Medicare-covered skilled nursing service, Medicare does pay a portion of these expenses based on the proportion of Medicare visits to total visits. Thus, lower supervisory costs for non-Medicare patients may result in savings for the Medicare program. Similarly, to the degree that individual State Medicaid programs cover and pay HHAs for furnishing unskilled care to Medicaid recipients, the more liberal requirement for supervising aides may enable State Medicaid programs to lower their payments in recognition of HHAs' lower administrative costs. If this occurs, the Federal Medicaid program will also benefit through reductions in Federal matching funds.

*C. Small Rural Hospital Impact Statement*

Section 1102(b) of the Act requires the Secretary to prepare a regulatory impact analysis if a final rule may have a significant impact on the operations of a substantial number of small rural hospitals. Such an analysis must conform to the provisions of section 604 of the RFA. For purposes of section 1102(b) of the Act, we define a small rural hospital as a hospital that has fewer than 50 beds and which is located outside of a Metropolitan Statistical Area.

We are not preparing a rural impact statement since we have determined, and the Secretary certifies, that this final rule would not have a significant economic impact on the operations of a substantial number of small rural hospitals.

**VI. Collection of Information Requirements**

Section 484.10 and its implementing patient rights notification and §§ 484.12, 484.14, 484.16, 484.18, 484.30, 484.32, 484.34, 484.36, 484.48, and 484.52 of this rule contain information collection requirements. However, they are currently approved under OMB number 0938-0365; thus, they do not require further OMB approval.

**List of Subjects in 42 CFR Part 484**

Administrative practice and procedure, Health facilities, Health professions, Home health agencies, Medicare, Reporting and recordkeeping requirements.

For the reasons set forth in the preamble, 42 CFR part 484 is amended as set forth below:

## PART 484—CONDITIONS OF PARTICIPATION: HOME HEALTH AGENCIES

A. The authority citation for Part 484 continues to read as follows:

**Authority:** Secs. 1102, 1861, 1871, and 1891 of the Social Security Act (42 U.S.C. 1302, 1395x, 1395hh, and 1395bbb).

B. In part 484, all references to "inservice", "speech pathologist", and "therapist assistant" throughout part 484 are revised to read "in-service", "speech-language pathologist", and "therapy assistant", respectively.

### Subpart A—General Provisions

C. Subpart A is amended as follows:

1. In § 484.4, the qualifications for "home health aide" are revised to read as follows:

**§ 484.4 Personnel qualifications.**

*"Home health aide".* Effective for services furnished after August 14, 1990, a person who has successfully completed a State-established or other training program that meets the requirements of § 484.36(a) and a competency evaluation program or State licensure program that meets the requirements of § 484.36 (b) or (e), or a competency evaluation program or State licensure program that meets the requirements of § 484.36 (b) or (e). An individual is not considered to have completed a training and competency evaluation program, or a competency evaluation program if, since the individual's most recent completion of this program(s), there has been a continuous period of 24 consecutive months during none of which the individual furnished services described in § 409.40 of this chapter for compensation.

### Subpart B—Administration

D. Subpart B is amended as follows:

1. In § 484.10, paragraphs (e)(1) introductory text and (e)(2) are revised to read as follows:

**§ 484.10 Condition of participation: Patient rights.**

* * * * *

(e) *Standard: Patient liability for payment.* (1) The patient has the right to be advised, before care is initiated, of the extent to which payment for the HHA services may be expected from Medicare or other sources, and the extent to which payment may be required from the patient. Before the care is initiated, the HHA must inform the patient, orally and in writing, of—

* * * * *

(2) The patient has the right to be advised orally and in writing of any changes in the information provided in accordance with paragraph (e)(1) of this section when they occur. The HHA must advise the patient of these changes orally and in writing as soon as possible, but no later than 30 calendar days from the date that the HHA becomes aware of a change.

* * * * *

2. In § 484.14, the section heading and paragraphs (c), (d), and (f) through (h); the introductory text of paragraph (i); and paragraphs (i)(2) (i) and (ii) introductory text are revised to read as follows:

**§ 484.14 Condition of participation: Organization, services, and administration.**

* * * * *

(c) *Standard: Administrator.* The administrator, who may also be the supervising physician or registered nurse required under paragraph (d) of this section, organizes and directs the agency's ongoing functions; maintains ongoing liaison among the governing body, the group of professional personnel, and the staff; employs qualified personnel and ensures adequate staff education and evaluations; ensures the accuracy of public information materials and activities; and implements an effective budgeting and accounting system. A qualified person is authorized in writing to act in the absence of the administrator.

(d) *Standard: Supervising physician or registered nurse.* The skilled nursing and other therapeutic services furnished are under the supervision and direction of a physician or a registered nurse (who preferably has at least 1 year of nursing experience and is a public health nurse). This person, or similarly qualified alternate, is available at all times during operating hours and participates in all activities relevant to the professional services furnished, including the development of qualifications and the assignment of personnel.

* * * * *

(f) *Standard: Personnel under hourly or per visit contracts.* If personnel under hourly or per visit contracts are used by the HHA, there is a written contract between those personnel and the agency that specifies the following:

(1) Patients are accepted for care only by the primary HHA.

(2) The services to be furnished.

(3) The necessity to conform to all applicable agency policies, including personnel qualifications.

(4) The responsibility for participating in developing plans of care.

(5) The manner in which services will be controlled, coordinated, and evaluated by the primary HHA.

(6) The procedures for submitting clinical and progress notes, scheduling of visits, periodic patient evaluation.

(7) The procedures for payment for services furnished under the contract.

(g) *Standard: Coordination of patient services.* All personnel furnishing services. All personnel furnishing services maintain liaison to ensure that their efforts are coordinated effectively and support the objectives outlined in the plan of care. The clinical record or minutes of case conferences establish that effective interchange, reporting, and coordination of patient care does occur. A written summary report for each patient is sent to the attending physician at least every 62 days.

(h) *Standard: Services under arrangements.* Services furnished under arrangements are subject to a written contract conforming with the requirements specified in paragraph (f) of this section and with the requirements of section 1861(w) of the Act (42 U.S.C. 1495x(w)).

(i) *Standard: Institutional planning.* The HHA, under the direction of the governing body, prepares an overall plan and a budget that includes an annual operating budget and capital expenditure plan.

* * * * *

(2) *Capital expenditure plan.* (i) There is a capital expenditure plan for at least a 3-year period, including the operating budget year. The plan includes and identifies in detail the anticipated sources of financing for, and the objectives of, each anticipated expenditure of more than $600,000 for items that would under generally accepted accounting principles, be considered capital items. In determining if a single capital expenditure exceeds $600,000 capital items. In determining if $600,000, the cost of studies, surveys, designs, plans, working drawings, specifications, and other activities essential to the acquisition, improvement, modernization, expansion, or replacement of land, plant, building, and equipment are included. Expenditures directly or indirectly related to capital expenditures, such as grading, paving, broker commissions, taxes assessed during the construction period, and costs involved in demolishing or razing structures on land are also included. Transactions that are separated in time, but are components of an overall plan or patient care objective, are viewed in their entirety without regard to their timing. Other costs related to capital expenditures include title fees, permit and license fees, broker commissions, architect, legal, accounting, and appraisal fees; interest, finance, or carrying charges on bonds, notes and other costs incurred for borrowing funds.

(ii) If the anticipated source of financing is, in any part, the anticipated payment from title V (Maternal and Child Health and Crippled Children's Services) or title XVIII (Medicare) or title XIX (Medicaid) of the Social Security Act, the plan specifies the following:

* * * * *

**§ 484.16 [Amended]**

3. In § 484.16, the parenthetical reference "(§ 484.14(b))" is removed.

4. In § 484.18, the section heading and paragraph (c) are revised to read as follows:

**§ 484.18 Condition of participation: Acceptance of patients, plan of care, and medical supervision.**

* * * * *

(c) *Standard: Conformance with physician's orders.* Drugs and treatments are administered by agency staff only as ordered by the physician. The nurse or therapist immediately records and signs oral orders and obtains the physician's countersignature. Agency staff check all medicines a patient may be taking to identify possible ineffective drug therapy or adverse reactions, significant side effects, drug allergies, and contraindicated medication, and promptly report any problems to the physician.

## Subpart C—Furnishing of Services

E. Subpart C is amended as follows:

1. In § 484.30, paragraph (a) is revised to read as follows:

**§ 484.30 Condition of participation: Skilled nursing services.**

* * * * *

(a) *Standard: Duties of the registered nurse.* The registered nurse makes the initial evaluation visit, regularly reevaluates the patient's nursing needs, initiates the plan of care and necessary revisions, furnishes those services requiring substantial and specialized nursing skill, initiates appropriate preventive and rehabilitative nursing procedures, prepares clinical and progress notes, coordinates services, informs the physician and other personnel of changes in the patient's condition and needs, counsels the patient and family in meeting nursing and related needs, participates in in-service programs, and supervises and teaches other nursing personnel.

* * * * *

2. In § 484.32, the introductory text is revised to read as follows:

**§ 484.32 Condition of participation: Therapy services.**

Any therapy services offered by the HHA directly or under arrangement are given by a qualified therapist or by a qualified therapy assistant under the supervision of a qualified therapist and in accordance with the plan of care. The qualified therapist assists the physician in evaluating level of function, helps develop the plan of care (revising it as necessary), prepares clinical and progress notes, advises and consults with the family and other agency personnel, and participates in in-service programs.

* * * * *

3. In § 484.36, paragraphs (a)(2), (b)(2)(iii), (b)(3) (i) and (ii), (b)(6), (d) are revised and paragraph (e) is added to read as follows:

**§ 484.36 Condition of participation: Home health aide services.**

* * * * *

(a) *Standard: Home health aide training*—* * *

(2) *Conduct of training*—

(i) *Organizations.* A home health aide training program may be offered by any organization except an HHA that, within the previous 2 years has been found—

(A) Out of compliance with requirements of this paragraph (a) or paragraph (b) of this section;

(B) To permit an individual that does not meet the definition of "home health aide" as specified in § 484.4 to furnish home health aide services (with the exception of licensed health professionals and volunteers);

(C) Has been subject to an extended (or partial extended) survey as a result of having been found to have furnished substandard care (or for other reasons at the discretion of the HCFA or the State);

(D) Has been assessed a civil monetary penalty of not less than $5,000 as an intermediate sanction;

(E) Has been found to have compliance deficiencies that endanger the health and safety of the HHA's patients and has had a temporary management appointed to oversee the management of the HHA;

(F) Has had all or part of it's Medicare payments suspended; or

(G) Under any Federal or State law within the 2-year period beginning on October 1, 1988—

(1) Has had it's participation in the Medicare program terminated;

(2) Has been assessed a penalty of not less than $5,000 for deficiencies in Federal or State standards for HHAs;

(3) Was subject to a suspension of Medicare payments to which it otherwise would have been entitled;

(4) Had operated under a temporary management that was appointed to oversee the operation of the HHA and to ensure the health and safety of the HHA's patients; or

(5) Was closed or had it's residents transferred by the State.

(ii) *Qualifications for instructors.* The training of home health aides and the supervision of home health aides during the supervised practical portion of the training must be performed by or under the general supervision of a registered nurse who possesses a minimum of 2 years of nursing experience, at least 1 year of which must be in the provision of home health care. Other individuals may be used to provide instruction under the supervision of a qualified registered nurse.

* * * * *

(b) *Standard: Competency evaluation and in-service training—*

* * * * *

(2) *Content and frequency of evaluations and amount of in-service training.*

* * * * *

(iii) The home health aide must receive at least 12 hours of in-service training per calendar year. The in-service training may be furnished while the aide is furnishing care to patients.

(3) *Conduct of evaluation and training*—(i) *Organizations.* A home health aide competency evaluation program may be offered by any organization except as specified in paragraph (a)(2)(i) of this section.

The in-service training may be offered by any organization.

(ii) *Evaluators and instructors.* The competency evaluation must be performed by a registered nurse. The in-service training generally must be supervised by a registered nurse who possesses a minimum of 2 years of nursing experience at least 1 year of which must be in the provision of home health care.

* * * * *

(6) *Effective date.* The HHA must implement a competency evaluation program that meets the requirements of this paragraph before February 14, 1990. The HHA must provide the preparation necessary for the individual to successfully complete the competency evaluation program. After August 14, 1990, the HHA may use only those aides that have been found to be competent in accordance with § 484.36(b).

* * * * *

(d) *Standard: Supervision.*

The following requirements for supervision of home health aides furnishing home health aide services to patients must be met:

(1) *Home health aide services only.* When only home health aide services are being furnished to a patient, a registered nurse must make a supervisory visit to the patient's residence at least once every 60 days. Each supervisory visit must occur when the aide is furnishing patient care.

(2) *Skilled nursing care or physical, speech, or occupational therapy furnished.* When skilled nursing care or physical, speech, or occupational therapy are also being furnished to a patient, a registered nurse must make a supervisory visit to the patient's residence at least every 2 weeks (either when the aide is present to observe and assist, or when the aide is absent) to assess relationships and determine whether goals are being met. When only physical, speech, or occupational therapy are furnished in addition to the home health aide services, a skilled therapist may make the supervisory visits in place of a registered nurse.

(e) *Personal care attendant: Evaluation requirements.*

(1) *Applicability.* This paragraph applies to individuals who are employed by HHAs exclusively to furnish personal care attendant services under a Medicaid personal care benefit.

(2) *Rule.* An individual may furnish personal care services, as defined in § 440.170 of this chapter, on behalf of an HHA after the individual has been found competent by the State to furnish those services for which a competency evaluation is required by paragraph (b) of this section and which the individual is required to perform. The individual need not be determined competent in those services listed in paragraph (a) of this section that the individual is not required to furnish.

(Catalog of Federal Domestic Assistance Program No. 93.773, Medicare—Hospital Insurance; No. 93.774, Medicare—Supplementary Medical Insurance Program)

Dated: December 10, 1990.

**Gail R. Wilensky,**

*Administrator, Health Care Financing Administration.*

Approved: March 26, 1991.

**Louis W. Sullivan,**

*Secretary.*

[FR Doc. 91-16865 Filed 7-17-91; 8:45 am]

BILLING CODE 4120-01-M

## FEDERAL COMMUNICATIONS COMMISSION

### 47 CFR Part 73

**[MM Docket No. 90-185; RM-7137]**

### Radio Broadcasting Services; Chico, CA

**AGENCY:** Federal Communications Commission.

**ACTION:** Final rule.

**SUMMARY:** This document allots FM Channel 224A to Chico, California, as that community's third local FM broadcast service, in response to a petition for rule making filed by Eric R. Hilding. See 55 FR 13810, April 12, 1990. Affinity Communications, Inc., licensee of Station KTMX (FM), Channel 298B, Colusa, California, proposed the allotment of Channel 224A to Chico in lieu of Channel 296A, to which the petitioner consented. Coordinates for Channel 224A at Chico are 39-43-54 and 121-50-18. With this action, the preceeding is terminated.

**DATES:** Effective Date: August 26, 1991. The window period for filing applications for Channel 224A at Chico, California, will open on August 27, 1991, and close on September 26, 1991.

**FOR FURTHER INFORMATION CONTACT:** Nancy Joyner, Mass Media Bureau, (202) 634-6530. Questions related to the window application filing process should be addressed to the Audio Services Division, FM Branch, Mass Media Bureau, (202) 634-0394.

**SUPPLEMENTARY INFORMATION:** This is a synopsis of the Commission's Report and Order, MM Docket No. 90-185, adopted June 26, 1991, and released July 12, 1991. The full text of this Commission decision is available for inspection and copying during normal business hours in the FCC Dockets Branch (room 230), 1919 M Street, NW., Washington, DC. The complete text of this decision may also be purchased from the Commission's copy contractors, Downtown Copy Center, (202) 452-1422, 1714 21st Street, NW., Washington, DC 20036.

**List of Subjects in 47 CFR Part 73**

Radio broadcasting.

### PART 73—[AMENDED]

1. The authority citation for part 73 continues to read as follows:

Authority: 47 U.S.C. 154, 303.

**§ 73.202 [Amended]**

2. Section 73.202(b), the Table of FM Allotments under California, is amended by adding Channel 224A at Chico.

Federal Communications Commission.

**Andrew J. Rhodes,**

*Chief, Allocations Branch, Policy and Rules Division, Mass Media Bureau.*

[FR Doc. 91-17105 Filed 7-17-91; 8:45 am]

BILLING CODE 6712-01-M

---

## 47 CFR Part 73

**[MM Docket No. 88-496; RM-6346, RM-6469, RM-6625, RM-6626, RM-6627]**

## Radio Broadcasting Services; Boalsburg, Clearfield, Duncansville, Jersey Shore, Laporte, Lewisburg, Lock Haven, Mill Hall, Muncy, Renovo, Riverside, St. Marys, and Tioga, PA

**AGENCY:** Federal Communications Commission.

**ACTION:** Final rule.

**SUMMARY:** The Commission amends the FM Table of Allotments for various communities in Pennsylvania, resulting in the allotment of first local channels at Laporte and Mill Hall and upgrading existing stations at Jersey Shore, St. Marys and Muncy. See 53 FR 42984, October 25, 1988, and Supplementary Information *infra*. With this action, this proceeding is terminated.

**DATES:** Effective August 26, 1991. The window period for filing applications for Channel 254A at Mill Hall, Pennsylvania, and Channel 280A at Laporte, Pennsylvania, will open on August 27, 1991, and close on September 26, 1991.

**FOR FURTHER INFORMATION CONTACT:** Leslie K. Shapiro, Mass Media Bureau, (202) 634-6530.

**SUPPLEMENTARY INFORMATION:** This is a synopsis of the Commission's Report and Order, MM Docket No. 88-496, adopted June 28, 1991, and released July 12, 1991. The full text of this Commission decision is available for inspection and copying during normal business hours in the FCC Dockets Branch (room 230), 1919 M Street NW., Washington, DC. The complete text of this decision may also be purchased from the Commission's copy contractor, Downtown Copy Center, (202) 452-1422, 1714 21st Street NW., Washington, DC 20037.

At the request of Covenant Broadcasting Company, the Commission substitutes Channel 242B1 for Channel 228A at Jersey Shore, Pennsylvania, and modifies its license for Station WJSA-FM to specify the higher powered channel, substitutes Channel 295A for Channel 226A at Renovo, Pennsylvania, and modifies the permit of Kennedy Broadcasting, Inc. for Station WMHU to specify the alternate Class A channel, and substitutes Channel 234A for Channel 227A at Tioga, Pennsylvania, and modifies the permit of Anita L. Clark for Station WPHD to specify the alternate Class A channel. At the request of Elk-Cameron Broadcasting Company, the Commission substitutes Channel 230B1 for Channel 232A at St. Marys, Pennsylvania, and modifies its license for Station WKBI-FM to specify operation on the higher powered channel, substitutes Channel 226B1 for Channel 230B1 at Clearfield, Pennsylvania, and modifies the license of Station WQYX to specify the alternate Class B1 channel, and substitutes Channel 229A for Channel 225A at Boalsburg, Pennsylvania, and modifies Boalsburg Broadcasting Company's construction permit for Station WVCV. At the request of Valley Radio, the Commission allots Channel 254A to Mill Hall, Pennsylvania, as the community's first local FM service. At the request of Pro Marketing, Inc., the Commission substitutes Channel 227B1 for Channel 280A at Muncy, Pennsylvania, and modifies its license for Station WHTO-FM to specify the higher powered channel, allots Channel 280A to Laporte, Pennsylvania, as the community's first local FM service, substitutes Channel 279A for Channel 242A at Lewisburg, Pennsylvania, and modifies the construction permit of Station WUNS to specify the alternate Class A frequency. A proposal filed by Lori L. Michael to allot Channel 226A to Duncansville, Pennsylvania, is dismissed. Canadian concurrence in each of the allotments has been received because all of the communities are located within 320 kilometers (200 miles) of the U.S.-Canadian border.

Channel 229A can be allotted to Boalsburg and can be used at the transmitter site specified in Station WVCV's construction permit, at coordinates North Latitude 40-45-08 and West Longitude 77-45-16. Channel 280A can be allotted to Laporte without the imposition of a site restriction at coordinates 41-25-24 and 76-29-42. Channel 254A can be allotted to Mill Hall without the imposition of a site restriction at coordinates 41-06-24 and 77-29-18. Channel 295A can be allotted to Renovo without the imposition of a site restriction at coordinates 41-19-36 and 77-45-00. Channel 234A can be allotted to Tioga and used at the transmitter site specified in Station WPHD's construction permit, at coordinates 41-57-05 and 77-09-14. Channel 226B1 can be allotted to Clearfield with a site restriction of 10.8 kilometers (6.7 miles) southeast at coordinates 40-58-30 and 78-20-00. Channel 242B1 can be allotted to Jersey Shore with a 13.2 kilometer (8.2 miles) southwest site restriction at coordinates 41-07-32 and 77-22-25. Channel 279A can be allotted to Lewisburg with a 10.8 kilometer (6.7 mile) west site restriction at coordinates 40-56-09 and 77-01-02. Channel 227B1 can be allotted to Muncy with a site restriction of 15.8 kilometers northwest at coordinates 41-18-03 and 76-55-38. Channel 230B1 can be allotted to St. Marys and can be used at the presently authorized transmitter site of Station WKBI at coordinates 41-24-56 and 78-33-56.

**List of Subjects in 47 CFR Part 73**

Radio broadcasting.

**PART 73—[AMENDED]**

1. The authority citation for part 73 continues to read as follows:

**Authority:** 47 U.S.C. 154, 303.

**§ 73.202 [Amended]**

2. Section 73.202(b), the FM Table of Allotments under Pennsylvania is amended by removing Channel 225A and adding Channel 229A at Boalsburg; removing Channel 230B1 and adding Channel 226B1 at Clearfield; removing Channel 228A and adding Channel 242B1 at Jersey Shore, removing Channel 242A and adding Channel 279A at Lewisburg, removing Channel 280A and adding Channel 227B1 at Muncy, removing Channel 226A and adding Channel 295A at Renovo, removing Channel 232A and adding Channel 230B1 at St. Marys, and removing Channel 227A and adding Channel 234A at Tioga.

3. Section 73.202(b), the FM Table of Allotments under Pennsylvania is amended by adding Laporte, Channel 280A and Mill Hall, Channel 254A.

Federal Communications Commission.

**Andrew J. Rhodes,**

*Chief, Policy and Rules Division, Mass Media Bureau.*

[FR Doc. 91-17104 Filed 7-17-91; 8:45 am]

BILLING CODE 6712-01-M

---

## 47 CFR Part 73

**[MM Docket No. 90-484; RM-7478]**

## Radio Broadcasting Services; Kalispell, MT

**AGENCY:** Federal Communications Commission.

**ACTION:** Final rule.

**SUMMARY:** This document grants a Petition for Reconsideration filed by

Skyline Broadcasters, Inc., thereby allotting Channel 292A to Kalispell, Montana, as that community's fourth FM broadcast service. See 56 FR 8975, March 4, 1991. Canadian concurrence has been received for Channel 292A at coordinates 48-11-42 and 114-18-48. With this action, this proceeding is terminated.

**DATES:** *Effective Date:* August 26, 1991. The window period for filing applications for Channel 292A will open on August 27, 1991, and close on September 26, 1991.

**FOR FURTHER INFORMATION CONTACT:** Kathleen Scheuerle, Mass Media Bureau, (202) 634-6530.

**SUPPLEMENTARY INFORMATION:** This is a synopsis of the Commission's Memorandum Opinion and Order, MM Docket No. 90-484, adopted June 28, 1991, and released July 12, 1991. The full text of this Commission decision is available for inspection and copying during normal business hours in the FCC Dockets Branch (Room 230), 1919 M Street NW., Washington, DC. The complete text of this decision may also be purchased from the Commission's copy contractors, Downtown Copy Center, 1714 21st Street NW., Washington, DC 20036, (202) 452-1422.

**List of Subjects in 47 CFR Part 73**

Radio broadcasting.

## PART 73—[AMENDED]

1. The authority citation for part 73 continues to read as follows:

Authority: 47 U.S.C. 154, 303.

**§ 73.202 [Amended]**

2. Section 73.202(b), the Table of FM Allotments under Montana, is amended by adding Channel 292A at Kalispell.

Federal Communications Commission.

**Douglas W. Webbink,**

*Chief, Policy and Rules Division, Mass Media Bureau.*

[FR Doc. 91-17103 Filed 7-17-91; 8:45 am]

BILLING CODE 6712-01-M

---

## 47 CFR Part 73

**[MM Docket No. 90-611; RM-7533]**

## Television Broadcasting Services; Alamosa, CO

**AGENCY:** Federal Communications Commission.

**ACTION:** Final rule.

**SUMMARY:** This document allots UHF television Channel 47 to Alamosa, Colorado, as that community's first local commercial television broadcast service, in response to a petition for rule making filed on behalf of Mountain Valley Television, Inc. See 55 FR 52187, December 20, 1990. Coordinates for Channel 47 at Alamosa are 37-19-04 and 105-52-38. See Supplementary Information, *infa.* With this section, the proceeding is terminated.

**EFFECTIVE DATE:** August 26, 1991.

**FOR FURTHER INFORMATION CONTACT:** Nancy Joyner, Mass Media Bureau (202) 634-6530.

**SUPPLEMENTARY INFORMATION:** This is a synopsis of the Commission's Report and Order, MM Docket No. 90-611, adopted June 26, 1991, and released July 12, 1991. The full text of this Commission decision is available for inspection and copying during normal business hours in the FCC Dockets Branch (room 230), 1919 M Street, NW., Washington, DC. The complete text of this decision may also be purchased from the Commission's copy contractors, Downtown Copy Center (202) 452-1422, 1714 21st Street, NW., Washington, DC 20036.

Alamosa is located within the prohibited co-channel minimum distance separation of 174.5 miles (280.8 kilometers) from Denver, Colorado, one of the designated television markets affected by the Commission's current freeze on television allotments of applicants therefore, pending the outcome of an inquiry into the use of advanced television systems in broadcasting. See Order, Advanced Television Systems and Their Impact on the Existing Television Broadcast Service, 52 FR 28346, published July 29, 1987. However, Channel 47 is allotted to Alamosa in compliance with the terms of the freeze *Order* at a restricted site. Interested parties should note that any application submitted for Channel 47 at Alamosa which does not specify a site beyond the "freeze zone" governing the allotment will not be accepted for filing.

**List of Subjects in 47 CFR Part 73**

Television broadcasting.

## PART 73—[AMENDED]

1. The authority citation for part 73 continues to read as follows:

Authority: 47 U.S.C. 154, 303.

**§ 73.606 [Amended]**

2. Section 73.606(b), the Table of Allotments for Colorado, is amended by adding Channel 47 at Alamosa.

Federal Communications Commission.

**Andrew J. Rhodes,**

*Chief, Allocations Branch, Policy and Rules Division, Mass Media Bureau.*

[FR Doc. 91-17138 Filed 7-17-91; 8:45 am]

BILLING CODE 6712-01-M

---

## 47 CFR Part 73

**[MM Docket No. 91-102; RM-7288]**

## Radio Broadcasting Services; Holly Springs and Byhalia, MS

**AGENCY:** Federal Communications Commission.

**ACTION:** Final rule.

**SUMMARY:** This document reallots Channel 235A from Holly Springs to Byhalia, Mississippi, and modifies the construction permit for Station WHLE(FM) to specify Byhalia as the community of license for Channel 235A, in response to a petition filed by Lois B. Crain. See 56 FR 15581, April 17, 1991. The coordinates for Channel 235A at Byhalia are 34-46-10 and 89-37-57. With this action, this proceeding is terminated.

**EFFECTIVE DATE:** August 26, 1991.

**FOR FURTHER INFORMATION CONTACT:** Kathleen Scheuerle, Media Bureau, (202) 634-6530.

**SUPPLEMENTARY INFORMATION:** This is a summary of the Commission's Report and Order, MM Docket No. 91-102, adopted June 26, 1991, and released July 12, 1991. The full text of this Commission decision is available for inspection and copying during normal business hours in the FCC Dockets Branch (room 230), 1919 M Street, NW., Washington, DC. The complete text of this decision may also be purchased from the Commission's copy contractors, Downtown Copy Center, 1714 21st Street, NW., Washington, DC 20036, (202) 452-1422.

**List of Subjects in 47 CFR Part 73**

Radio broadcasting.

## PART 73—[AMENDED]

1. The authority citation for part 73 continues to read as follows:

Authority: 47 U.S.C. 154, 303.

**§ 73.202 [Amended]**

2. Section 73.202(b), the Table of FM Allotments under Mississippi, is amended by removing Channel 235A at Holly Springs and adding Channel 235A, Byhalia.

Federal Communications Commission.

**Andrew J. Rhodes,**

*Chief, Allocations Branch, Policy and Rules Division, Mass Media Bureau.*

[FR Doc. 91-17136 Filed 7-17-91; 8:45 am]

BILLING CODE 6712-01-M

---

**47 CFR Part 73**

**[MM Docket No. 90-32; RM-6954; RM-7051; RM-7077; RM-7200; RM-7362; RM-7363; RM-7364; RM-7365]**

## Radio Broadcasting Services; Fairmont, NC, Andrews, Charleston, Elloree, Estill, Little River, and Sullivan's Island, SC

**AGENCY:** Federal Communications Commisson.

**ACTION:** Final rule.

**SUMMARY:** The Commission, at the request of Southern Communications, Inc., substitutes Channel 263C3 for channel 264A at Charleston, South Carolina, and modifies Station WSUY's construction permit to specify operation on the higher powered channel. At the request of Pro Media, Inc., Channel 265C2 is substituted for Channel 265A at Fairmont, North Carolina, the license of Station WSTS-FM is modified to specify operation on the higher powered channel; Channel 264A is substituted for Channel 265A at Andrews, South Carolina, and the license of Station WGTN-FM is modified to specify the alternate Class A channel. At the request of Clarence E. Jones, Channel 262C3 is substituted for Channel 262A at Elloree, South Carolina, and the license of Station WMNY-FM is modified to specify operation on the higher powered channel. The proposals of Southern Communications to substitute channel 263C2 for channel 264A at Charleston, reallot Channel 263C2 to Sullivan's Island, and modify the construction permit of Station WSUY accordingly, Little River Radio to allot Channel 264A to Little River, South Carolina, and Estill Broadcasting Company to allot Channel 263A to Estill, South Carolina, are dismissed. See 55 FR 4885, February 12, 1990, and Supplementary Information, *infra*. With this action, this proceeding is terminated.

**EFFECTIVE DATE:** August 26, 1991.

**FOR FURTHER INFORMATION CONTACT:** Leslie K. Shapiro, Mass Media Bureau, (202) 634-6530.

**SUPPLEMENTARY INFORMATION:** This is a synopsis of the commission's Report and Order, MM Docket No. 90-32, adopted June 24, 1991, and released July 10, 1991. The full text of this Commission decision is available for inspection and copying during normal business hours in the FCC Dockets Branch (room 230), 1919 M Street, NW., Washington, DC. The complete text of this decision may also be purchased from the Commission's copy contractor, Downtown Copy Center, (202) 452-1422, 1714 21st Street, NW., Washington, DC 20036.

Channel 265C2 can be allotted to Fairmont, North Carolina, with a site restriction of 30.8 kilometers (19.1 miles) southeast to accommodate Pro Media's desired transmitter site, at coordinates 34-15-47 and 78-55-50. Channel 264A can be allotted to Andrews, South Carolina, at Station WGTN-FM's present transmitter site, at coordinates 33-24-24 and 79-27-07. Channel 263C3 can be allotted to Charleston, South Carolina, with a site restriction of 7.1 kilometers (4.4 miles) south to accommodate Southern's desired transmitter site, at coordinates 32-41-59 and 79-55-34. Channel 262C3 can be allotted to Elloree, South Carolina, with a site restriction of 20.1 kilometers (12.5 miles) southwest to avoid short-spacings to Station WSCQ, Channel 261A, West Columbia, South Carolina, and to the outstanding construction permit for Channel 252A at Pawley's Island, South Carolina, at coordinates 33-22-00 and 80-40-00. Because the petition which resulted in the allotment of Channel 264A to Andrews was filed prior to October 2, 1989, the licensee of Station WGTN-FM may avail itself of the provisions of § 73.213(c)(1) with respect to the outstanding construction permit for Channel 262A at Pawley's Island (BPH-88063OME). Because the petition which resulted in the allotment of Channel 262C3 to Elloree was filed prior to October 2, 1989, the licensee of Station WMNY-FM may avail himself of the provisions of § 73.213(c)(1) with respect to Station WSCQ, Channel 261A, West Columbia, South Carolina.

**List of Subjects in 47 CFR Part 73**

Radio broadcasting.

**PART 73—[AMENDED]**

1. The authority citation for part 73 continues to read as follows:

Authority: 47 U.S.C. 154, 303.

**§ 73.202 [Amended]**

2. Section 73.202(b), the Table of FM Allotments under North Carolina, is amended by removing Channel 265A and adding Channel 265C2 at Fairmont.

3. Section 73.202(b), the Table of FM Allotments under South Carolina, is amended by removing Channel 264A and adding Channel 263C3 at Charleston, removing Channel 265A and adding Channel 264A at Andrews, and removing Channel 262a and adding Channel 262C3 at Elloree.

Federal Communications Commission.

**Andrew J. Rhodes,**

*Chief, Allocations Branch, Policy and Rules Division; Mass Media Bureau.*

[FR Doc. 91-17137 Filed 7-17-91; 8:45 am]

BILLING CODE 6712-01-M

---

**DEPARTMENT OF THE INTERIOR**

**Fish and Wildlife Service**

**50 CFR Part 17**

**RIN 1018-AB42**

## Endangered and Threatened Wildlife and Plants; Determination of the plant, Rhynchospora knieskernii (Knieskern's beaked-rush), to be a Threatened Species

**AGENCY:** Fish and Wildlife Service, Interior.

**ACTION:** Final rule.

**SUMMARY:** The Service determines the plant, *Rhynchospora knieskernii* (Knieskern's beaked-rush) to be a threatened species. The species is currently known from 27 sites in New Jersey; however, many of these are small, unprotected populations. An early successional species and poor competitor, *R. knieskernii* is threatened by succession and other natural and human-induced factors affecting its wetland habitat, such as development, agriculture, and other activities influencing water quality and hydrologic regimes. This rule implements the protection provided by the Endangered Species Act of 1973, as amended, for *R. knieskernii*.

**EFFECTIVE DATE:** August 19, 1991.

**ADDRESSES:** The complete file for this species is available for inspection, by appointment, during normal business hours at the U.S. Fish and Wildlife Service, 927 North Main Street (Building D-1), Pleasantville, New Jersey 08232.

**FOR FURTHER INFORMATION CONTACT:** Supervisor, U.S. Fish and Wildlife Service (see **ADDRESSES** section) (609/646-9310).

**SUPPLEMENTARY INFORMATION:**

### Background

The Knieskern's beaked-rush (*Rhynchospora knieskernii*), a member of the sedge family (Cyperaceae), is endemic to New Jersey. Historically, 38 sites were known in New Jersey. Two historic Delaware sites, known from 1874 and 1875 herbarium records, have

not been relocated (Keith Clancy, Community Ecologist/Botanist, Delaware Division Natural Resources and Environmental Control, *in litt.*, 1990). Specific locational information is lacking for these specimens, and some botanists question whether the specimens were actually collected in Delaware, suggesting they may actually have been collected in New Jersey (James Stasz, Botanist, *in litt.*, 1989; David Snyder, Botanist, New Jersey Natural Heritage Program, pers. comm., 1989). Twenty-seven sites exist today, confined to four counties (Atlantic, Burlington, Ocean, Monmouth) in New Jersey.

Knieskern's beaked-rush was first discovered by Peter D. Knieskern, M.D. in Ocean County, New Jersey in 1843 (Stone 1973) who originally labelled specimens as *Rhynchospora grayana*; however, the species description was not published until John Carey did so in 1847 (Carey 1847), naming it after Dr. Knieskern. *Rhynchospora knieskernii* is an annual plant which grows from 1.5 cm to 60 cm high and is slender with short narrowly linear levels. Clusters of small flowers are numerous and contained at distant intervals along the length of the culm. Fruiting occurs from July to September.

P.D. Knieskern's *Catalogue of Plants Growing Without Cultivation in Monmouth and Ocean Counties, New Jersey*, published in 1857, described *R. knieskernii* as "rare." Much of this perceived rarity stemmed from the fact that from its discovery in the 1800's up to recent years, it was thought to be restricted to bog iron deposits within pitch pine lowland swales and pine barren savannas. These bog-iron beds are iron-coated surface sediment deposits formed by the oxidation of iron-rich sediments at aerated surfaces, such as streams and wetlands. Since 1984, additional occurrences on unvegetated, muddy substrates associated with abandoned clay pits, sand pits, railroads, paths, rights-of-way, and other disturbed, early successional areas have been discovered. Since the publication of the proposed rule, three previously undocumented sites were reported to the Service, and Service biologists located two additional sites during field surveys.

Of the 27 extant sites, six (all on State lands) are found on bog iron substrates. Of the remaining sites not on bog iron substrate, two occurrences are on Federal land (one is located on property owned by the Federal Aviation Administration in Ocean and Burlington Counties, and one is located at Naval Weapons Station Earle in Monmouth County), one is on State land, and the rest are located on private property.

*Rhynchospora knieskernii* is a rare species due to a combination of factors. Succession, biological circumstances, as well as documented and potential human disturbance, threaten many populations. Although the species receives some protection at sites under Federal or State stewardship, management is needed to maintain the species as its community experiences successional changes. The species occurs in groundwater-influenced, constantly fluctuating environments and requires disturbance for successful colonization, establishment, and maintenance. However, too much disturbance may eliminate populations. Many of the sites supporting the species are unstable or ephemeral, such as tire ruts, paths, roadsides and ditches, and rights-of-way, where competition from natural and introduced species adversely affects populations.

Populations vary in size from the smallest sites containing about a dozen plants or occupying just a few square feet of habitat to the largest site occurring in patches covering at least 2 acres. In a status survey of extant occurrences conducted in 1984 and 1985 by the New Jersey Natural Heritage Program, over half of the populations were severely reduced or not found due to severe drought. Several other sites were inundated by water and thus were not relocatable. Of the extant occurrences, only five have been ranked by the New Jersey Natural Heritage Program as "A" rank occurrences, meaning that they are considered to have long-term viability. These are all on natural bog iron substrates. All other occurrences are in man-made habitats and are considered suboptimal in terms of site quality, quantity, or protection. At least six sites are being affected by succession. Several are threatened by development and human disturbance, including trash dumping, off-road vehicle use, and trampling. Field observations by the New Jersey Natural Heritage Program suggest that not all plants produce culms each year.

Wetland habitats in the New Jersey Pinelands have historically been subject to human-induced impacts from Atlantic white-cedar and pitch pine logging, bog iron excavation, glass and paper industries, and charcoal production. More recently, residential, commercial, and industrial development; sand and gravel mining; expansion of roads, rights-of-way, and other infrastructure; sewage disposal; landfills; and agricultural expansion have adversely affected wetland habitat in the Pinelands. In addition to the direct loss of habitat, succession, changes in water quality and quantity, changes in nutrient levels, and disturbance of soil have contributed to the decrease in suitable habitat (Robichaud 1980; Roman and Good 1983).

Federal government action on this plant began as a result of section 12 of the Endangered Species Act of 1973 (16 U.S.C. 1531 *et seq.*) which directed the Secretary of the Smithsonian Institution to prepare a report on plants considered to be endangered, threatened or extinct. This report (later published as Ayensu and DeFilipps 1978), designated as House Document No. 94–51, was presented to Congress on January 9, 1975. *Rhynchospora Knieskernii* was designated as "endangered" in that document. On July 1, 1975, the Service published a notice in the **Federal Register** (40 FR 27823) of its acceptance of the Smithsonian report as a petition within the context of section 4(c)(2) of the Endangered Species Act (now section 4(b)(3)) and of its intention to review the status of plant taxa named within. On June 16, 1976, the Service published a proposed rule in the **Federal Register** (41 FR 24523) to determine approximately 1,700 vascular plant species to be endangered pursuant to section 4 of the Endangered Species Act. The list of 1,700 plant taxa was assembled on the basis of comments and data received in relation to House Document No. 94–51 and the July 1, 1975, **Federal Register** publication. *Rhynchospora Knieskernii* was included in the July 1, 1975, notice of review and the June 16, 1976, proposal. General comments received in relation to the 1976 proposal were summarized in the **Federal Register** on April 26, 1978 (44 FR 17909). On December 10, 1978, the Service published a notice (44 FR 70796) withdrawing the portion of the June 16, 1976, proposal that had not been made final, along with four other proposals that had expired due to a procedural requirement of the 1978 Amendments to the Endangered Species Act. On December 15, 1980 (45 FR 82479) and September 27, 1985 (50 FR 99525), the Service published revised notices of review for native plants in the **Federal Register**. *Rhynchospora knieskernii* was included in this notice as a category 1 species. Category 1 taxa are those taxa for which the Service presently has information to support a proposed rule.

Section 4(b)(3)(B) of the Endangered Species Act, as amended in 1982, requires the Secretary to make certain findings on pending petitions within 12 months of their receipt. Section 2(b)(1) of

the 1982 amendments further requires that all petitions pending on October 13, 1982, be treated as having been newly submitted on that date. This was the case for *R. knieskernii*, because the 1975 Smithsonian report had been accepted as a petition. Each October, 1983 through 1989, the Service found that the petitioned listing of *R. knieskernii* was warranted but precluded by other listing actions of a higher priority.

In 1985, the Service contracted with The Nature Conservancy's Eastern Regional Office to conduct status survey work on *R. knieskernii* along with several other Federal candidate species. This report (Rawinski and Cassin 1986) updated Service informational files on this species and reconfirmed the need for listing of *R. knieskernii*. The February 21, 1990, notice of review (55 FR 6184) retained *R. knieskernii* as a category 1 species. The Service published the proposed rule for this species on August 8, 1990 (FR 32271). That proposal constituted the Service's final finding on the petition, required by the Endangered Species Act.

**Summary of Comments and Recommendations**

In the August 8, 1990 proposed rule (55 FR 32271) and associated notifications, all interested parties were requested to submit factual reports or information by October 9, 1990, that might contribute to the development of a final rule. Appropriate State agencies, county governments, Federal agencies, scientific organizations, and other interested parties were contacted and requested to comment. Newspaper notices were published in The Press of Atlantic City on August 28, 1990, and the Asbury Park Press on August 22, 1990, which invited general public comment.

The New Jersey Department of Environmental Protection and The Nature Conservancy commented that *R. knieskernii* should receive "endangered" status due to the threats to its continued existence (see Summary of Factors Affecting the Species). No additional data to suggest that the species is in danger of extinction in the immediate future were provided. Information received from the Philadelphia Botanical Club provided reports of three additional locations of the species, and the U.S. Fish and Wildlife Service has located two others, thus increasing the total number of known sites to 27. It is likely that sites can be maintained through management and protection efforts of involved parties. Based upon available information on rarity and threats, the Service retains the position that *R. knieskernii* is most appropriately designated as "threatened," as it is threatened with becoming endangered, rather than extinct in the foreseeable future.

The New Jersey Pinelands Commission, the Philadelphia Botanical Club, and the Monmouth County Department of Planning provided additional background information and the Division of Parks and Recreation in Delaware indicated concurrence with the proposed listing.

**Summary of Factors Affecting the Species**

Section 4(a)(1) of the Endangered Species Act and regulations promulgated to implement the listing provisions of the Endangered Species Act (50 CFR part 424) set forth the procedures for adding species to the Federal Lists. A species may be determined to be an endangered or threatened species due to one or more of the five factors described in section 4(a)(1). These factors and their application to *R. knieskernii* Carey (Knieskern's beaked-rush) are as follows:

A. *The present or threatened destruction, modification, or curtailment of its habitat or range.* As an obligate hydrophyte, *R. knieskernii* is threatened by loss and degradation of its wetland habitat. The species has declined from a historic record of approximately 38 sites to 27 extant, confined to Atlantic, Burlington, Ocean, and Monmouth Counties in New Jersey. Historically, the species was also known from Camden County, New Jersey. Two occurrences are recorded from Delaware; however, there is some dispute regarding the validity of these records (see Background section). It is highly likely that additional sites once existed, but because the species habitat was once thought to be restricted to bog iron habitats, many habitats suitable by today's standards probably were not searched. Some New Jersey populations have been discovered using a soil-habitat predictive search (James Stasz, *in litt.*, 1989), but, while additional populations may be discovered in the future, the species will probably always be considered rare.

All but one of the known populations of *Rhynchospora knieskernii* occurs in the New Jersey Pinelands, an area whose history is one of repeated disturbance. Regular fires (now controlled) maintain the predominately oak/pitch pine dominated forest stands. Logging of pitch pine and Atlantic white-cedar, expansion of roads and infrastructure, bog iron works, glass making, paper industries, charcoal production, sand and gravel mining, agricultural expansion, and residential and commercial development have contributed to habitat loss and degradation in the Pinelands (Robichaud 1980; Pinelands Commission 1980). These activities have resulted in the extirpation of some species and classification of others as endangered or threatened (Pinelands Commission 1980); *Rhynchospora* is listed as "endangered" by the Pinelands Commission. With the expansion of the casino gambling industry in southeastern New Jersey and the linking of major highways and railways to more developed parts of New Jersey and neighboring states, increased population growth is expected to lead to further reductions in suitable habitat.

Natural and human-induced succession have played a major role in the decline of the species from many sites (New Jersey Natural Heritage Program 1989) and continues to be the greatest threat to *R. knieskernii*. Pollutants such as agricultural fertilizers, pesticides, herbicides, and organic and inorganic wastes, entering streams directly or seeping through the soils to the groundwater and then to stream waters, have caused nutrient and pH changes that, in turn, have lead to changes in the floral composition of the Pinelands (Pinelands Commission 1980). Nutrient influxes and sedimentation from adjacent development, landfills, sewage disposal areas, and other sources within the watershed probably serve as catalysts in increasing rates of succession by creating conditions favorable to more competitive species, such as maple, poison ivy, honeysuckle, greenbriar, and Virginia creeper. *Rhynchospora knieskernii* occurs on otherwise unvegetated, muddy substrates of gravel, sand, or clay of ephemeral habitats such as tire tracks, paths, ditches and other disturbed areas, such as those found along powerlines, pond edges, roadsides, and railroads. Without management, these populations may decline in response to successional changes in vegetation over time. Maintenance of these habitats through mowing, pesticide applications, and conversion to other uses, could adversely impact the species; however, some form of habitat disturbance is necessary to maintain the open habitat conditions required by this species. Bog iron habitats are naturally subject to erosion and other dynamic processes that tend to maintain early successional stages, although at least one of the occurrences on bog iron is susceptible to succession.

*Rhynchospora knieskernii* is influenced by fluctuating ground water

levels. Water withdrawal from aquifers underlying the Pinelands affects the characteristic ecosystem by lowering the water table. Modification of groundwater supply as a result of adjacent withdrawal of irrigation water, and draining and ditching of lands for agriculture and residential and commercial development have adversely affected some populations. Conversion of wetlands for commercial cranberry production may threaten populations (Rawinski and Cassin 1986).

In some cases, manmade or human-altered wetlands left undisturbed for a period of years have developed vegetative characteristics that temporarily mimic those found in naturally fluctuating ponds and shores, and have been found to support *R. knieskernii* (Rawinski and Cassin 1986). Rights-of-way, abandoned cranberry bogs, former bog iron, sand and gravel mining pits have produced savannahs, ponds and other wetland habitats in which rare plant species, such as *R. knieskernii* may be found. However, these man-made wetlands tend to be ephemeral in nature and thus probably do not represent habitats conducive to the long-term survival of the species.

Restricted today to the most densely populated State in the Nation, *R. knieskernii* is vulnerable as New Jersey's growth and development continues to encroach upon its remaining suitable habitat. Although previously direct habitat loss was of greatest concern, today with the enactment of wetland protection laws, it is the indirect and cumulative effects of adjacent projects and other disturbances within the watershed that most seriously threaten *R. knieskernii.* Many wetlands have been rendered unsuitable due to natural succession, changes in water quality and hydrologic regimes from sediment and nutrient influxes, and colonization by opportunistic plant species. Some activities that may adversely affect the species include draining or filling of wetlands; road, bridge, and railroad construction and maintenance; pipelines, transmission lines, and other linear developments and associated rights-of-way.

B. *Overutilization for commercial, recreational, scientific or educational purposes.* Because of its lack of aesthetic character, most collections of *R. knieskernii* have been for scientific purposes. Plants have been taken for the purpose of documenting the species range and distribution, and some sites have been subject to frequent collection in the past. While collection has been relatively low in recent years, any future collections could seriously threaten populations, especially sites consisting of only a few plants or occupying a very small area.

C. *Disease or predation.* Disease is not known to be a threat to existing populations. The role of herbivory has not been determined.

D. *The inadequacy of existing regulatory mechanisms.* Existing regulations provide limited protection from deleterious disturbance, habitat loss and degradation, and biological limitations, which are major threats to the species. New Jersey has listed *R. knieskernii* on the Endangered Plant Species List authorized by the Endangered Plant Species List Act of 1989 (N.J.A.C. 7:5C). This list provides recognition to listed plants, but does not provide regulatory protection to the species in the form of prohibitions on collection or habitat loss or degradation.

The New Jersey Freshwater Wetlands Protection Act (N.J.S.A. 13:9B–1 *et seq.*) prohibits regulated activities from jeopardizing threatened or endangered species or adversely modifying the historic or documented habitat of the species, but this protection only extends to plants if they are Federally listed under the Endangered Species Act. Further, the New Jersey Freshwater Wetlands Protection Act does not pertain to areas under jurisdiction of the Pinelands Commission, where *R. knieskernii* occurs.

Pursuant to the policy to preserve, protect, and enhance the diversity of plant communities through regulation of development, the Pinelands Protection Act (N.J.S.A. 13:18–1 *et seq.*) states that no development within the Pinelands shall be carried out unless it is designed to avoid irreversible adverse impacts to the survival of populations of threatened or endangered plants listed therein. *Rhynchospora knieskernii* is listed as "endangered."

Through the New Jersey Pinelands Protection Act, as implemented through the Pinelands Comprehensive Management Plan, threats to this rare species from direct habitat loss have been greatly reduced. The Pinelands Protection Act clearly provides a certain level of protection from indirect and cumulative impacts of adjacent projects and other deleterious disturbances within the watershed that alter water quality, hydrologic regimes, vegetative composition, and nutrient and sediment influxes. However, this Act excludes the following from the definition of development: Improvements, expansion, or reconstruction of single family dwellings or structures used for agricultural or horticultural purposes; repair of existing or installation of utilities to serve existing or approved development; and, clearing of less than 1,500 square feet (not wetlands or within 200 feet of a scenic corridor). Cranberry and blueberry production are considered by the Pinelands Commission to be part of the overall culture and character of the Pinelands and thus are encouraged forms of agriculture. Withdrawal of water for production of these berries as well as the conversion or reuse of sites for production may threaten some *R. knieskernii* sites (Rawinski and Cassin 1986).

The regulations governing the Coastal Area Facility Review Act (N.J.S.A. 13:19–1 *et seq.*) state that habitat for endangered and threatened species on official Federal or State lists or under active consideration for inclusion on either list will be considered "special areas." Development in these special areas is prohibited unless it can be shown that endangered or threatened wildlife or vegetative species habitat would not be adversely affected. Only one population of *R. knieskernii* occurs within the jurisdiction of this coastal legislation.

E. *Other natural or manmade factors affecting its continued existence.* Changes in the water table have been associated with population fluctuations of *R. knieskernii.* During extremely wet periods, plants do not appear until water levels have dropped sufficiently to expose the shoreline. Similarly, during periods of drought, plants do not appear. The New Jersey Natural Heritage Program (1989) has suggested that several sites have probably been severely reduced by drought. Further, not all plants in a population produce culms each year (see Background).

Several sites have been adversely affected by intense off-road vehicle use (New Jersey Natural Heritage Program 1989), which has compacted soils in some areas to the extent that the species cannot thrive. Because of its occurrence in disturbed areas, *R. knieskernii* is subject to trash dumping and trampling, which could become significant considering the low numbers of plants and small size of some populations, and the restricted distribution of the species.

Preliminary information suggests that the species requires some form of habitat manipulation to maintain the early successional habitats required for its establishment and maintenance. Natural forms of disturbance such as fires and erosion have been suppressed or controlled at many sites.

The Service has carefully assessed th best scientific and commercial

information available regarding the past, present, and future threats faced by *R. knieskernii* in determining to make this rule final. Based on this evaluation, the preferred action is to list *R. knieskernii* as a threatened species. Federal listing will provide opportunities for protection of populations from natural and man-induced habitat loss and degradation, resulting from direct, indirect, and cumulative actions in the watershed. Although documented from 27 sites, the species is in need of protection because of threats of succession and competition from other species, habitat loss and degradation, human disturbance, and other factors such as fluctuating populations, small population size, and restricted range. For the reasons discussed below, a critical habitat designation is not included in this rule.

**Critical Habitat**

Section 4(a)(3) of the Endangered Species Act, as amended, requires that, to the maximum extent prudent and determinable, the Secretary designate critical habitat at the time the species is determined to be endangered or threatened. The Service finds that the designation of critical habitat is not presently prudent for this species. The Service finds designation of critical habitat to be imprudent because of the potential for collection and vandalism that could result from the publication of a detailed critical habitat description and map. The majority of populations are located on private property, for which there is no protection against taking. Many sites are very small in size, occupying only a few square feet, thus loss of plants from vandalism or increased collection could potentially eliminate these populations. Prohibitions on taking from areas under Federal jurisdiction will be available at only two sites. The designation of critical habitat would not provide additional benefits to populations that do not already accrue from the listing through section 7 requirements and the recovery process. The Federal Aviation Administration and the U.S. Navy have been informed regarding the presence of *R. knieskernii* on their properties and of the section 7 standards.

**Available Conservation Measures**

Conservation measures provided to species listed as endangered or threatened under the Endangered Species Act include recognition, recovery actions, requirements for Federal protection and prohibitions against certain practices. Recognition through listing encourages and results in conservation actions by Federal, State and private agencies, groups and individuals. The Endangered Species Act provides for possible land acquisition and cooperation with the states and requires that recovery actions be carried out for all listed species. Such activities are initiated by the Service following listing.

Conservation and management of *R. knieskernii* will likely involve an integrated approach of site protection and habitat manipulation to maintain early plant succession. Protection efforts will likely focus on reducing known threats, land acquisition, landowner agreements, and management of habitats to maintain conditions conducive to the species establishment and maintenance. It is also anticipated that listing will encourage research on critical aspects of the species population biology. Information regarding disturbance requirements for establishment and maintenance of populations, population fluctuations, seed production and seed banking, is needed. These factors will be important in long-term management considerations for individual populations.

The protection required of Federal agencies and the prohibitions against certain activities involving listed plants are discussed, in part, below.

Section 7(a) of the Endangered Species Act, as amended, requires Federal agencies to evaluate their actions with respect to any species that is proposed or listed as endangered or threatened and with respect to its critical habitat, if any is being designated. Regulations implementing this interagency cooperation provision of the Endangered Species Act are codified at 50 CFR part 402. Section 7(a)(2) requires Federal agencies to ensure that activities they authorize, fund, or carry out are not likely to jeopardize the continued existence of listed species or result in destruction or adverse modification of critical habitat. If a proposed Federal agency action may affect a listed species or its critical habitat, the responsible Federal agency must enter into formal consultation with the Service.

Federal actions that could affect *R. knieskernii* include the funding, authorization, and implementation of projects such as roads, railroads, bridges, sewerage and stormwater management pipes, pipelines, transmission lines and other rights-of-way, draining and filling of wetlands, and other development activities. The Service anticipates that applications for permits issued by the U.S. Army Corps of Engineers under section 404 of the Clean Water Act (33 U.S.C. 1344 *et seq.*) will be the most likely triggers for section 7 consultation for this species. However, the Service is not presently aware of any specific proposed projects under jurisdiction of the Corps of Engineers that might affect known populations of *R. knieskernii*.

The Federal Aviation Administration administers property on which one population of *R. knieskernii* is located. The U.S. Air Force had proposed to build a Northeast Regional Communications Facility on the property, but is no longer considering use of the site. The Federal Aviation Administration proposes construction of a ground-to-air communication facility at this site and has initiated coordination with the Service regarding this proposal. A second population occurs at Naval Weapons Station Earle. These agencies have been informed of the species presence and section 7 consultation requirements for activities that may affect the species. The Endangered Species Act directs Federal agencies to utilize their authorities in furtherance of the Endangered Species Act by carrying out programs for the conservation and recovery of listed species. Because maintenance and survival of populations will likely involve maintaining early successional habitats and eliminating potential threats to existing sites, the areas under Federal jurisdiction would benefit from habitat management by the respective agency.

The Endangered Species Act and its implementing regulations found at 50 CFR 17.71 and 17.72 set forth a series of general trade prohibitions and exemptions that apply to all threatened plants. All trade prohibitions of section 9(a)(2) of the Endangered Species Act, implemented by 50 CFR 17.71, apply. These prohibitions, in part, make it illegal for any person subject to the jurisdiction of the United States to import or export, transport in interstate or foreign commerce in the course of a commercial activity, sell or offer for sale this species in interstate or foreign commerce, or to remove and reduce to possession this species from areas under Federal jurisdiction. Seeds from cultivated plant specimens of threatened plant species are exempt from these prohibitions provided that a statement of "cultivated origin" appears on their containers. For plants, the 1988 amendments (Pub. L. 100-478) of the Endangered Species Act also prohibit the malicious damage or destruction on Federal lands and the removal, cutting, digging up, or damaging or destroying of listed species in knowing violation of any State law or regulation, including State criminal trespass law. Certain

exemptions apply to agents of the Service and State conservation agencies. The Endangered Species Act and 50 CFR 17.72 also provide for the issuance of permits to carry out otherwise prohibited activities involving threatened species under certain circumstances. It is anticipated that few trade permits would ever be sought or issued because the species is not common in cultivation or trade. Requests for copies of the regulations on plants and inquiries regarding them may be addressed to the Office of Management Authority, Rm 432, 4401 N Fairfax Dr., Arlington, Virginia 22203–3507 (703/358–2104).

### National Environmental Policy Act

The Fish and Wildlife Service has determined that an Environmental Assessment, as defined under the authority of the National Environmental Policy Act of 1969, need not be prepared in connection with regulations adopted pursuant to section 4(a) of the Endangered Species Act of 1973, as amended. A notice outlining the Service's reasons for this determination was published in the **Federal Register** on October 25, 1983 (48 FR 49244).

### References Cited


Ayensu, R., and R. DeFilipps. 1978. Endangered and Threatened Plants of the United States. Smithsonian Institution and World Wildlife Fund. 403 pp.

Carey, J. 1847. A New Species of *Rhynchospora*. The American Journal of Science and Arts. IV:25.

Knieskern, P.D. 1857. Catalogue of Plants Growing without Cultivation in Monmouth and Ocean Counties, New Jersey. True American Office, Trenton, New Jersey, 41 pp.

New Jersey Natural Heritage Program. 1989. Element Occurrence Records for *Rhynchospora knieskernii*.

Pinelands Commission. 1980. Comprehensive Management Plan for the Pinelands National Reserve and Pinelands Area. Pinelands Commission, New Lisbon, New Jersey. 439 pp.

Rawinski, T., and J. Cassin. 1986. Status of *Rhynchospora knieskernii*. Unpublished Report for the Fish and Wildlife Service, Newton Corner, Massachusetts. 4 pp.

Robichaud, B. 1980. A Conceptual Framework for Pinelands Decision Making. Center for Coastal and Environmental Studies, Rutgers University, New Brunswick, New Jersey. 78 pp.

Roman, C., and R. Good. 1983. Pinelands Wetlands: Values, Function, and Man's Impacts. Center for Coastal and Environmental Studies. Rutgers University, New Brunswick, New Jersey. 106 pp.

Stone, W. 1973. The Plants of Southern New Jersey. Quarterman Publications, Inc., Boston, Massachusetts. 828 pp.


### Author

The primary author of this rule is Lynn K. Wilson. U.S. Fish and Wildlife Service, present address: 24000 Avila Road, Laguna Niguel, California 92656 (714/643–4270 or FTS 796–4270).

### List of Subjects in 50 CFR Part 17

Endangered and threatened species, Exports, Imports, Reporting and recordkeeping requirements, and Transportation.

### Regulation Promulgation

## PART 17—[AMENDED]

Accordingly, part 17, subchapter B of chapter I, title 50 of the Code of Federal Regulations, is amended as set forth below:

1. The authority citation for part 17 continues to read as follows:

**Authority:** 16 U.S.C. 1361–1407; 16 U.S.C. 1531–1544; 16 U.S.C. 4201–4245; Pub. L. 99–625, 100 Stat 3500; unless otherwise noted.

2. Amend 17.12(h) by adding the following, in alphabetical order under the family Cyperaceae, to the list of Endangered and Threatened Plants:

**§ 17.12 Endangered and threatened plants.**

* * * * *

(h) * * *

| Species | | Historic range | Status | When listed | Critical habitat | Special rules |
|---|---|---|---|---|---|---|
| Scientific name | Common name | | | | | |
| Cyperaceae—Sedge family: | | | | | | |
| * | * | * | * | * | * | |
| *Rhynchospora knieskernii* | Knieskern's beaked-rush | U.S.A. (NJ,DE) | T | 429 | NA | NA |
| * | * | * | * | * | * | |

Dated: May 22, 1991.

**Richard N. Smith,**

*Acting Director, Fish and Wildlife Service.*

[FR Doc. 91–17133 Filed 7–17–91; 8:45 am]

BILLING CODE 4310-55-M

## DEPARTMENT OF COMMERCE

## National Oceanic and Atmospheric Administration

## 50 CFR Part 672

**[Docket No. 901184–1042]**

## Groundfish of the Gulf of Alaska

**AGENCY:** National Marine Fisheries Service (NMFS), NOAA, Commerce.

**ACTION:** Notice of change in reporting requirements.


**SUMMARY:** The Director of the NMFS, Alaska Region (Regional Director), announces that the submission of Daily Production Reports from processors fishing for or receiving sablefish harvested with hook-and-line gear in the Central and Eastern Regulatory areas and associated reporting areas of the Gulf of Alaska is no longer required because sablefish fisheries for vessels using hook-and-line gear in the Central and Eastern Regulatory Areas is closed to directed fishing.


**DATES:** Effective 12 noon Alaska local time (A.l.t.), July 15, 1991, until the end of the fishing year or until further notice.

**FOR FURTHER INFORMATION CONTACT:** Andrew N. Smoker, Resource Management Specialist, NMFS, 907–586–7228.

**SUPPLEMENTARY INFORMATION:** The Fishery Management Plan for Groundfish of the Gulf of Alaska (FMP) governs the groundfish fishery in the Exclusive Economic Zone within the Gulf of Alaska (GOA) management area under the Magnuson Fishery Conservation and Management Act. The FMP was prepared by the North Pacific Fishery Management Council and is implemented by regulations appearing at 50 CFR 611.92 for the foreign fishery and at 50 CFR parts 620 and 672 for the U.S. fisheries.

Daily Production Reports of sablefish received from the hook-and-line sablefish fishery in the Central and Eastern Regulatory Areas were required by the Regional Director under the authority of § 672.5(c)(3), as of 12 noon,

A.l.t., May 15, 1991 (56 FR 22829; May 17, 1991).

The directed sablefish hook-and-line fisheries in the Central Regulatory Area as well as in the Southeast Outside/East Yakutat and West Yakutat Districts of the Eastern Regulatory Area have been closed (56 FR 24351; May 30, 1991 for the Southeast Outside/East Yakutat District of the Eastern Regulatory Area—56 FR 27465; June 14, 1991 for the West Yakutat District of the Eastern Regulatory Area—56 FR 28499; June 21, 1991 for the Central Regulatory Area). Therefore, the Regional Director is no longer requiring Daily Production Reports from processor vessels and shoreside processing facilities as of 12 noon, A.l.t., July 15, 1991.

**Classification**

This action is taken under § 672.5(c)(3) and is in compliance with Executive Order 12291.

**List of Subjects in 50 CFR Part 672**

Fish, Fisheries, Reporting and recordkeeping requirements.

Authority: 16 U.S.C. 1801 *et seq.*

Dated: July 15, 1991.

**Richard H. Schaefer,**

*Director of Office of Fisheries, Conservation and Management, National Marine Fisheries Service.*

[FR Doc. 91-17126 Filed 7-15-91; 1:49 pm]

BILLING CODE 3510-22-M

---

**50 CFR Part 675**

**[Docket No. 910483-1155]**

**RIN 0648-AD49**

## Groundfish Fishery of the Bering Sea and Aleutian Islands Area

**AGENCY:** National Marine Fisheries Service (NMFS), NOAA, Commerce.

**ACTION:** Final rule.

**SUMMARY:** NMFS issues a final rule to implement Amendment 16a to the Fishery Management Plan for the Groundfish Fishery of the Bering Sea and Aleutian Islands (FMP). These regulations: (1) Establish Pacific herring bycatch management measures for the groundfish trawl fisheries; (2) authorize the NMFS Director, Alaska Region (Regional Director), to temporarily prohibit directed fishing for specified groundfish species in all or part of a Federal statistical area to reduce high bycatch rates of prohibited species; and (3) authorize the Regional Director to limit the amount of pollock that may be taken in the directed trawl fishery for pollock using non-pelagic trawl gear. These actions are necessary to promote management and conservation of groundfish and other fish resources. They are intended to further the goals and objectives contained in the FMP that govern these fisheries.

**EFFECTIVE DATES:** Amendments to §§ 675.2 and 675.21 and redesignation of figures are effective July 12, 1991. Amendments to §§ 675.20 and 675.24 are effective August 12, 1991.

**ADDRESSES:** Copies of Amendment 16a and the environmental assessment/regulatory impact review/final regulatory flexibility analysis (EA/RIR/FRFA) may be obtained from the North Pacific Fishery Management Council, P.O. Box 103136, Anchorage, Alaska 99510.

**FOR FURTHER INFORMATION CONTACT:** Susan J. Salveson, Fishery Management Biologist, NMFS, 907-586-7230.

**SUPPLEMENTARY INFORMATION:** The domestic and foreign groundfish fisheries in the Exclusive Economic Zone (EEZ) of the Bering Sea and Aleutian Islands Area (BSAI) are managed by the Secretary of Commerce (Secretary) according to the FMP prepared by the North Pacific Fishery Management Council (Council) under the authority of the Magnuson Fishery Conservation and Management Act (Magnuson Act). The FMP is implemented by regulations for the foreign fishery at 50 CFR part 611 and for the U.S. fishery at 50 CFR part 675. General regulations that also pertain to the U.S. fishery appear at 50 CFR part 620.

The Council approved Amendment 16a for review by the Secretary under section 304(b) of the Magnuson Act. The Secretary received Amendment 16a for review on March 7, 1991. The Magnuson Act requires the Secretary, or his designee, to approve, disapprove, or partially disapprove FMPs or FMP amendments before the close of the 95th day following receipt. Following receipt of Amendment 16a, the Regional Director immediately commenced a review of the amendment to determine whether it was consistent with the provisions of the Magnuson Act and other applicable law. A notice of availability of Amendment 16a was published in the **Federal Register** (56 FR 10527; March 13, 1991). It invited review of, and comment on, the amendment through May 6, 1991. A proposed rule was published in the **Federal Register** on April 15, 1991 (56 FR 15063). The proposed rule invited comments through May 28, 1991. This final rule implementing Amendment 16a takes comments received into account. Comments received are summarized and responded to below (see Public Comments Received).

The preamble to the proposed rule described and presented the reasons for each measure contained in Amendment 16a. The Regional Director has reviewed each measure and the reasons for it. During his review, the Regional Director considered comments received from the public, including fishing associations. He has determined that each measure is consistent with the Magnuson Act and other applicable law and has approved the measures contained in Amendment 16a as authorized under section 304 of the Magnuson Act.

The following is a summary of each approved measure under Amendment 16a:

(1) Management measures are implemented to reduce Pacific herring bycatch in the groundfish trawl fisheries. These measures include a prohibited species catch (PSC) limit framework and a series of timed area closures (Herring Savings Areas) that are triggered by the attainment of the herring PSC limit. The PSC limit is established at one percent of the established herring biomass. For the 1991 fishing year, the herring PSC limit is 834 metric tons (mt). The 1991 herring PSC limit is apportioned to the following domestic trawl fisheries based on each fishery's anticipated bycatch of herring:

| Fishery category as defined in § 675.21(b)(4) | 1991 [1] |
|---|---|
| Midwater pollock | 584 |
| DAP Greenland turbot | 8 |
| DAP Rock sole | 0 |
| DAP Flatfish | 83 |
| DAP other fishery | 159 |
| Total | 834 |

[1] Herring bycatch allowance (mt).

A fishery's herring bycatch since the beginning of the 1991 fishing year is credited against its apportionment of the 1991 herring PSC limit. Fisheries that are apportioned a zero amount of the 1991 herring PSC limit are prohibited from fishing in the Herring Savings Areas.

Two Summer Herring Savings Areas and one Winter Herring Savings Area are established to protect seasonal concentrations of herring from those fisheries that have attained their annual apportionment of the herring PSC limit. A description of Herring Savings Areas is found under § 675.2.

(2) "Hot-spot closure authority" is established that allows the Regional Director to close temporarily areas to directed groundfish fishing to avoid high bycatch rates of prohibited species specified under § 675.20(c).

(3) Regulatory authority is established that allows the Regional Director to limit the amount of pollock total allowable catch (TAC) that may be taken in the directed trawl fishery for pollock using non-pelagic trawl gear to reduce the amount of prohibited species taken in this fishery.

**Changes From the Proposed Rule in the Final Rule**

1. In § 675.21, paragraph (d)(1) of the proposed rule is revised so that when the midwater pollock fishery attains its herring bycatch allowance, directed fishing for pollock using trawl gear will be prohibited in the Herring Savings Areas. Under the proposed rule, once the midwater pollock fishery attained its herring bycatch allowance, only directed fishing for pollock with pelagic trawl gear would have been prohibited in the Herring Savings Areas. This closure language would have been unenforceable and easily circumvented by vessel operators by simple modifications to pelagic trawl gear (e.g., adding a single bobbin) that would enable continued midwater fishing for pollock with non-pelagic trawl gear once a closure was triggered. Such gear modifications would result in further herring bycatch being attributed to the "DAP other fishery," and undermine the intent of the Council to limit herring bycatch in the midwater pollock fishery once the herring PSC allowance specified for this fishery had been reached.

2. In § 675.21, paragraph (d)(4) of the proposed rule is revised to reflect changes to regulations made under revised Amendment 16 (56 FR 21619; May 10, 1991). Revised Amendment 16 changed the closure specifications for the "DAP other fishery" so that when a prohibited species bycatch allowance is reached, further directed fishing for Pacific cod with trawl gear and for pollock with non-pelagic trawl gear is prohibited.

3. In § 675.24, technical edits are made to paragraph (c) to clarify and separate gear limitations for sablefish and pollock fisheries. Specifically, paragraph (c)(3) of the proposed rule is redesignated as paragraph (c)(2), and paragraphs (c), (c)(1), and (c)(2) are redesignated as paragraphs (c)(1), (c)(1)(i), and (c)(1)(ii), respectively.

**Public Comments Received**

Two letters containing comments were received during the comment period. Comments also were received from the North Pacific Fishery Management Council during its April 22–27, 1991, meeting. Comments focused on PSC limits, herring bycatch management measures, the "hot spot" authority, and the apportionment of the pollock TAC between pelagic and non-pelagic trawl gear. The comments received are summarized and responded to in the following paragraphs.

*Comment 1.* The proposed rule is flawed because it does not provide an opportunity for public comment on the PSC limits implicitly imposed by Amendment 16a. Specifically, neither the amendment nor its supporting documentation addresses alternatives to the existing fixed PSC caps for halibut and crab. Under NMFS's own guidelines, one of the purposes of the National Environmental Policy Act (NEPA) and Executive Order 12291 is to ensure that the public is provided adequate opportunity to review and comment on major Federal actions and that regulations not be implemented unless the potential benefits outweigh the potential costs to society. The process followed by the Council in adopting fixed halibut and crab PSC limits under Amendment 16 and 16a undermines NMFS's own guidelines as far as PSC limits are concerned because all reference to alternative limits and cost/benefit tradeoffs has been deleted from the EA/RIR/IRFA and from the **Federal Register** notice of proposed rulemaking for Amendment 16a. As a consequence, the Secretary and the Office of Management and Budget have no basis to make the findings required by Executive Order 12291 regarding costs and benefits of the proposed rule based on alternative PSC limits. This process is defective and the proposed rule should be rejected until an analysis of alternative PSC limits can be prepared and submitted for Secretarial review and public comment.

*Response:* Amendment 16a to the FMP addresses herring bycatch limits, but does not include PSC limits for halibut and crab. Amendment 16 to the FMP (56 FR 2700; January 24, 1991) maintained the fixed PSC limits for halibut and crab that expired at the end of 1990 under Amendment 12a to the FMP (54 FR 32642; August 9, 1989). During preparation of Amendment 16a, the Council conducted an analysis of alternative halibut and crab PSC limits. This analysis was completed, included in the Amendment 16a draft EA/RIR/IRFA for distribution to the public for review and comment, and presented to the Council at its September 1990 meeting. The Council reviewed the analysis for alternative halibut and crab PSC limits in the draft EA/RIR/IRFA and received public testimony on the analysis. After consideration of the information presented to it at the September meeting, the Council declined to adopt halibut and crab PSC limits as part of Amendment 16a. The halibut and crab PSC limit analysis was subsequently deleted from the Amendment 16a EA/RIR/IRFA when the amendment was submitted for Secretarial review because Amendment 16a does not include adoption of these PSC limits.

*Comment 2.* The use of a percentage of the herring stocks as the basis for the PSC limit presents two problems. Floating PSC limits: (1) Allow trawlers to increase their take of bycatch species when the stocks increase and (2) allow increased waste of fishery resources. PSC limits should provide for the progressive decrease of bycatch and a corresponding reduction of waste. Waste is inherently inconsistent with conservation principles, and must not be allowed to persist above levels that are the absolute minimum.

*Response.* The intent of variable PSC limits based on fluctuations of a prohibited species stock abundance is to adjust allowable bycatch levels in the groundfish fisheries with corresponding fluctuations in a prohibited species stock. Variable PSC limits will result in reduced PSC limits when herring biomass levels are low, providing protection to herring stocks that fixed PSC limits may not provide. Conversely, variable PSC limits allow more bycatch in groundfish fisheries when abundance levels of a prohibited species increase and a corresponding increase in incidental catch in the groundfish fisheries occurs. NMFS agrees that bycatch rates of prohibited species in groundfish operations should be reduced. Until a comprehensive incentive program is developed and implemented for all groundfish operations, management measures are restricted to less-effective bycatch controls. Once a comprehensive incentive program is implemented, a progressive decrease of PSC limits may be reasonable.

The "waste" associated with any discarded catch is of concern in all fisheries. The large volume of discards associated with the groundfish trawl fisheries has initiated Council consideration of management measures to limit such "waste." Although full utilization of fishery resources and a "minimization" of bycatch may be justifiable as a goal for fishery management, the economic and conservation aspects of unretained bycatch are less clear and must be fully analyzed prior to Council action to "minimize bycatch" or require full utilization of fishery resources.

*Comment 3.* Herring bycatch management measures should incorporate an individual incentive system, such as individual transferrable quotas (ITQ) of allowable bycatch, to reduce effectively the incidental take of herring. Without an individual incentive system, herring bycatch rates will remain high, bycatch allowances will be prematurely reached, and harvest shortfalls of the groundfish optimum yield will continue.

*Response:* NMFS acknowledges that individual accountability of bycatch under an ITQ program may be a long-term goal. An incentive program has been implemented for halibut and red king crab bycatch in selected groundfish fisheries. As NMFS gains experience with this program, and steps are taken to enhance the program, the expansion of the incentive program to other fisheries and bycatch species will be considered under subsequent regulatory action.

*Comment 4.* The sequence of time-area closures contemplated for herring bycatch management allows fishermen operating in one area of the Bering Sea to take disproportionate amounts of herring bycatch and trigger trawl closures in the Herring Savings Areas that affect trawl operations in a completely different area of the ocean. For example, inshore pollock fishermen could have a substantial herring bycatch, resulting in closure of the "Winter Herring Savings Area." This area is far removed from near-shore trawl operations, but important to offshore pollock operations. Such a system is inequitable and will result in tremendous economic costs.

*Response.* NMFS recognizes that increased costs could be incurred by operators of vessels who are forced to change fishing operations when the Herring Savings Areas are closed. Catcher/processor vessels that normally fish for pollock in the Winter Herring Savings Area would have to fish outside this area if it were closed due to attainment of the herring bycatch allowance by trawl vessels participating in the midwater pollock fishery. Alternatively, inshore vessels could be disproportionately affected from closures of the Summer Herring Savings Areas, especially if increased operating costs and distances to open fishing grounds prevent such vessels from fishing for groundfish during closures of these areas.

Although operators of certain vessels may incur increased operating costs or be unable to fish for groundfish during closures of the Herring Savings Areas, the analysis prepared for Amendment 16a concludes that the BSAI trawl fleet could still harvest available groundfish quotas outside of the Herring Savings Areas.

*Comment 5.* To be effective, "hot-spot" closure authority requires timely closures of limited areas based upon current, inseason data. The "hot-spot" authority proposed under Amendment 16a will be too slow to have the desired effect if an impact analysis must be prepared for each closure action. Furthermore, closures of entire Federal statistical areas for 60 days, rather than some smaller portion of statistical areas for shorter periods of time, will unnecessarily constrain fishing operations in areas that may be fished with low bycatch rates.

*Response.* NMFS acknowledges that the "hot spot" authority implemented under Amendment 16a will require that an impact analysis be prepared for the specific restriction(s) imposed under a "hot-spot" closure action. Hot-spot closures implemented under Amendment 16a would not necessarily be broad in scope if available information could support closures of portions of statistical areas for less than 60 days. The time to prepare, review, and implement a hot-spot closure could be of a duration that would make such action ineffective for purposes of reducing bycatch rates. However, there may be other cases when hot-spot closures could be implemented within a timeframe that would reduce bycatch rates.

The Council is considering the development of a frameworked hot-spot closure authority that would routinely allow more efficient and effective time-area closures. To enable more effective closures of "hot-spots," inseason closure authority of these areas must be developed that sets forth specific threshold criteria in regulations which, when triggered, would allow closure of specific areas. This authority would allow the Regional Director to close predetermined areas and would be similar to closures due to attainment of a groundfish TAC or prohibited species bycatch allowance. Development of a refined hot-spot closure authority will require determination of appropriate threshold conditions (weekly prohibited species bycatch rates or amounts by area) and resulting time-area closures. These conditions would be published in the **Federal Register** for public review and comment prior to the beginning of a fishing year.

*Comment 6.* Proposed bycatch management regulations imposed on the pollock fishery should incorporate mortality-based incentives that provide credit for quick return of bycatch. For example; implementation of a program that credits trawl fishermen with halibut returned to sea within 30 minutes after coming on deck would lessen bycatch impact through increased bycatch survival and increased harvest of target species.

*Response.* NMFS and the International Pacific Halibut Commission (IPHC) are investigating methods to reduce halibut mortality from handling in the groundfish trawl and longline fisheries. Before regulatory action is taken, information must be collected on how prohibited species are handled by crew on board the domestic trawl fleet. Furthermore, quantitative data analysis and research must be undertaken: (1) To identify factors affecting prohibited species bycatch mortality and viability, (2) to derive an objective index of halibut or crab condition, and (3) to quantify the potential savings of halibut that would result from alternative actions taken by groundfish fishermen to reduce mortality. NMFS intends to work with the fishing industry and the IPHC to explore feasible, practical measures to reduce bycatch mortality in the groundfish fisheries. Regulatory action to implement such measures in unlikely before mid-1992.

*Comment 7.* The existing definition of pelagic trawl gear as a management tool to reduce bycatch of prohibited species is ineffective, as evidenced by the success of certain groundfish fishermen to modify their trawl gear, circumvent the definition of pelagic trawl gear, and continue trawl operations at high bycatch rates. Given this experience, further use of the pelagic trawl gear definition to limit prohibited species bycatch in the pollock fisheries will be a useless management tool, unless a valid distinction between pelagic and non-pelagic trawl gear is established and enforced.

*Response.* NMFS is aware of the problems associated with enforcing the existing definition of pelagic trawl gear with respect to limiting trawl bycatch of prohibited species. In response, NMFS has implemented rulemaking to prohibit all trawling for Pacific cod once a prohibited species bycatch allowance specified for the "DAP other fishery" has been attained (56 FR 21619; May 10, 1991). The proposed rule for Amendment 16a also has been revised to prohibit all trawling for pollock in the Herring Savings Areas once the herring bycatch allowance specified for the midwater pollock fishery has been reached. Additional emergency rulemaking is being considered by NMFS that would further restrict the use of non-pelagic trawl gear once a fishery's prohibited

species bycatch allowance has been reached.

**North Pacific Fishery Management Council Comments on Amendment 16a**

*Comment 8.* The Council noted that 1991 harvests of pollock with non-pelagic trawl gear in the BSAI comprised 8 percent of the total pollock harvest taken with trawl gear through April, compared to 11 percent in 1990. Additional pollock harvests with non-pelagic trawl gear are expected to be minimal because of 1991 halibut bycatch constraints imposed on the directed fishery for pollock with non-pelagic trawl gear. Therefore, the Council recommended that quota constraints on the 1991 directed fishery for pollock using non-pelagic trawl gear are unnecessary for purposes of limiting halibut and crab bycatch in this fishery.

*Response.* NMFS concurs in the Council's recommendation and has not implemented a 1991 limitation of the amount of pollock that may be harvested in the directed fishery for pollock using non-pelagic trawl gear.

*Comment 9.* Recent (1983–1988) observer data indicate that the Winter Herring Savings Area may need adjustment to encompass areas of winter herring concentration. NMFS should review this information and develop recommendations for Council consideration.

*Response.* The Winter Herring Savings Area implemented under Amendment 16a incorporates the area of long-term, historical winter concentrations of herring. Over 80 percent of the commercial harvest of Bering Sea herring was taken from the Winter herring Savings Area during foreign directed fisheries; however, annual shifts of winter herring concentrations did occur. The 1983–1988 observer data on herring bycatch indicate that the midwinter fishing effort for pollock occurred primarily west and north of the Winter Herring Savings Area. To some extent, a shift in herring winter concentrations also could have accounted for relatively high bycatch rates outside historical areas of winter concentrations. An examination of 1989 and 1990 herring bycatch data shows that most of the winter herring bycatch occurred in the Winter Savings Area.

The Alaska Department of Fish and Game (ADF&G) manages commercial and subsistence herring fisheries in Alaska state waters. The Council has requested ADF&G to examine alternatives for an extended Summer Savings Area to provide further protection to migrating herring stocks. ADF&G has expressed an interest in expanding this analysis to examine the adequacy of the Winter Savings Area based on recent domestic observer data and to develop alternative configurations for the Winter Savings Area. However, with the information available at this time, the Secretary deems the Winter Savings Area defined under Amendment 16a as adequate for protecting winter concentrations of herring based on long-term historical data from directed foreign fisheries and recent (1989–1990) distribution patterns of herring bycatch. The configurations of the Herring Savings Areas may be revised through a subsequent FMP amendment, pending Council action on the expanded ADF&G analysis of the Herring Savings Areas.

The Secretary concurs in the Council's adoption of Amendment 16a and has approved the amendment and its implementing regulations. The Secretary also concurs in the Council's recommendations for 1991 herring bycatch allowances as set forth in the notice of proposed rulemaking for Amendment 16a. The Secretary further concurs in the Council's recommendation to not limit the amount of 1991 pollock TAC available for harvest by the directed fishery for pollock using non-pelagic trawl gear. A regulatory limitation during 1991 is unnecessary because the directed fishery for pollock using non-pelagic trawl gear has taken only 8 percent of the total BSAI pollock catch to date and halibut PSC restrictions will prohibit significant harvests of pollock with non-pelagic trawl gear for the remainder of the year.

**Classification**

The Regional Director determined that Amendment 16a is necessary for the conservation and management of the groundfish fisheries in the BSAI and that is is consistent with the Magnuson Act and other applicable law.

The Council prepared an environmental assessment (EA) for this amendment. The Assistant Administrator for Fisheries, NOAA (Assistant Administrator), found that no significant impact on the quality of the human environment will occur as a result of this rule. A copy of the EA may be obtained from the Council (see "ADDRESSES").

The Assistant Administrator determined that this rule is not a "major rule" requiring a regulatory impact analysis under Executive Order 12291. This determination is based on the EA/RIR/FRFA prepared by the Council. A copy of the EA/RIR/FRFA may be obtained from the Council (see "ADDRESSES").

This rule does not contain a collection of information requirement for purposes of the Paperwork Reduction Act.

The Council determined that this rule will be implemented in a manner that is consistent to the maximum extent practicable with the approved coastal management program of Alaska. This determination was submitted to the responsible State agency for review under section 307 of the Coastal Zone Management Act. Since the appropriate State agency did not reply within the statutory time period, consistency is automatically inferred.

This rule does not contain policies with federalism implications sufficient to warrant preparation of a Federalism Assessment under Executive Order 12612.

Sections 675.2 and 675.21 of this rule must be effective as soon as possible to protect herring concentrations within the Herring Savings Areas in the event that fishery herring bycatch allowances are attained. The Summer Savings Areas extend from June 15 through August 15, and closure of these areas once a fishery has reached its herring bycatch allowance is necessary if the council's intent to limit 1991 herring bycatch is to be carried out. Consequently, the Assistant Administrator finds for good cause that it is contrary to the public interest to delay for 30 days the effective date of this rule under section 553(d) of the Administrative Procedure Act in order to implement the Summer Savings Areas as soon as possible. Sections 675.20 and 675.24 will be effective following a 30-day period of delayed effectiveness in accordance with section 553(d) of the Administrative Procedure Act.

**List of Subjects in 50 CFR Part 675**

Fisheries, Fishing vessels.

Dated: July 11, 1991.

**Michael F. Tillman,**

*Acting Assistant Administrator for Fisheries, National Marine Fisheries Service.*

For the reasons set out in the preamble, 50 CFR part 675 is amended as follows:

## PART 675—GROUNDFISH OF THE BERING SEA AND ALEUTIAN ISLANDS AREA

1. The authority citation for 50 CFR part 675 continues to read as follows:

Authority: 16 U.S.C. 1801 *et seq.*

2. In § 675.2, Figure 1 is redesignated as Figure 1 to part 675 and will appear at the end of the part and a definition for *Herring Savings Areas* is added in alphabetical order to areas as follows:

**§ 675.2 Definitions**

* * * * *

*Herring Savings Areas* means any of the following three areas:

(1) *Summer Herring Savings Area 1* means that part of the Bering Sea subarea that is south of 57° N. latitude and between 162° and 164° W. longitude from 12:00 noon Alaska local time (A.1.t.) June 15 through 12:00 noon A.1.t. July 1 of a fishing year.

(2) *Summer Herring Savings Area 2* means that part of the Bering Sea subarea that is south of 56°30′ N. latitude and between 164° and 167° W. longitude from 12:00 noon A.1.t. July 1 through 12:00 noon A.1.t. August 15 of a fishing year.

(3) *Winter Herring Savings Area* means that part of the Bering Sea subarea that is between 58° and 60° N. latitude and between 172° and 175° W. longitude from 12:00 noon A.1.t. September 1 of the current fishing year through 12:00 noon A.1.t. March 1 of the succeeding fishing year.

* * * * *

3. In § 675.20, paragraph (e)(2) introductory text, and paragraph (f) are revised, paragraphs (e)(3) and (4) are redesignated as (e)(4) and (5), and new paragraphs (e)(1)(iv), (e)(3), and (e)(6) are added to read as follows:

**§ 675.20 General limitations.**

* * * * *

(e) * * *

(1) * * *

(iv) Interim closures of statistical areas, or portions thereof, to directed fishing for specified groundfish species.

(2) Any inseason adjustment taken under paragraphs (e)(1)(i), (ii), or (iii) must be based on a determination that such adjustments are necessary to prevent:

* * * * *

(3) Any inseason closure of a statistical area, or portion thereof, under paragraph (e)(1)(iv) of this section must be based upon a determination that such closures are necessary to prevent:

(i) A continuation of relatively high bycatch rates of prohibited species specified under § 675.20(c) of this part in a statistical area, or portion thereof;

(ii) The take of an excessive share of PSC limits or bycatch allowances established under § 675.21 of this part by vessels fishing in a statistical area, or portion thereof;

(iii) The closure of one or more directed fisheries for groundfish due to excessive prohibited species bycatch rates occurring in a specified fishery operating within all or part of a statistical area; or

(iv) The premature attainment of established PSC limits or bycatch allowances and associated loss of opportunity to vessels to harvest the groundfish optimum yield (OY).

* * * * *

(6) The inseason closure of a statistical area, or a portion thereof, under paragraph (e)(1)(iv) of this section shall not extend beyond a 60-day period unless information considered under paragraph (f) of this section warrants an extended closure period. Any closure of a statistical area, or portion thereof, to reduce prohibited species bycatch rates requires a determination by the Regional Director that the closure is based on the best available scientific information concerning the seasonal distribution and abundance of prohibited species and bycatch rates of prohibited species associated with various groundfish fisheries.

(f) *Data.* All information relevant to one or more of the following factors may be considered in making the required determinations under paragraphs (e)(2) and (3) of this section:

(1) The effect of overall fishing effort within a statistical area;

(2) Catch per unit of effort and rate of harvest;

(3) Relative distribution and abundance of stocks of groundfish species and prohibited species within all or part of a statistical area;

(4) The condition of a stock in all or part of a statistical area;

(5) Inseason prohibited species bycatch rates observed in groundfish fisheries in all or part of a statistical area;

(6) Historical prohibited species bycatch rates observed in groundfish fisheries in all or part of a statistical area;

(7) Economic impacts on fishing businesses affected; and

(8) Any other factor relevant to the conservation and management of groundfish species or any incidentally caught species, which are designated as prohibited species or for which a PSC limit has been specified.

* * * * *

4. In § 675.21, paragraphs (b)(4)(i) through (v) are redesignated as paragraphs (b)(4)(ii) through (vi), paragraphs (c)(3) and (c)(4) are redesignated as paragraphs (e) and (f), paragraph (b)(4) introductory text, is revised, newly redesignated paragraphs (b)(4)(ii) through (v) are revised, the heading of paragraph (c) is revised, and new paragraphs (a)(6), (b)(4)(i), and (d) are added to read as follows:

**§ 675.21 Prohibited species catch (PSC) limitations.**

(a) * * *

(6) The PSC limit of Pacific herring caught while conducting any domestic trawl fishery for groundfish in the Bering Sea and Aleutian Islands management area is 1 percent of the annual eastern Bering Sea herring biomass. The PSC limit will be apportioned into annual herring PSC allowances, by target fishery, and will be published along with the annual herring PSC limit in the **Federal Register** with the notices of proposed and final specifications defined in § 675.20(a)(7) of this part.

* * * * *

(b) * * *

(4) For purposes of this section six domestic fisheries are defined as follows:

(i) *DAP midwater pollock fishery* means DAP fishing with trawl gear during any weekly reporting period that results in a catch of pollock that is 95 percent or more of the total amount of groundfish caught during the week.

(ii) *DAP Greenland turbot fishery* means DAP fishing with trawl gear during any weekly reporting period that

(A) Results in retained amounts of Greenland turbot and arrowtooth flounder, in the aggregate, that are 20 percent or more of the total amount of other groundfish or groundfish products retained, calculated in round weight equivalents, and

(B) Does not qualify as a "DAP midwater pollock fishery."

(iii) *DAP rock sole fishery* means DAP fishing with trawl gear during any weekly reporting period that

(A) Results in retained amount of rock sole that are 20 percent or more of the total amount of other groundfish or groundfish products retained, calculated in round weight equivalents, and

(B) Does not qualify as a "DAP midwater pollock fishery" or "DAP Greenland turbot fishery."

(iv) *DAP flatfish fishery* means DAP fishing with trawl gear during any weekly reporting period that

(A) Results in retained amounts of yellowfin sole and "other flatfish," in the aggregate, that are 20 percent or more of the total amount of other groundfish or groundfish products retained, calculated in round weight equivalent, and

(B) Does not qualify as a "DAP midwater pollock fishery," "DAP Greenland turbot fishery," or "DAP rock sole fishery."

(v) *DAP other fishery* means DAP fishing with trawl gear during any weekly reporting period that

(A) Does not qualify as a "DAP midwater pollock fishery," and

(B) Results in retained amounts of any other combination of groundfish species

calculated in round weight equivalents that would not qualify as a "DAP Greenland turbot fishery," "DAP rock sole fishery," or DAP flatfish fishery."

* * * * *

(c) *Attainment of a PSC allowance for red king crab, C. bairdi, or Pacific halibut.* * * *

(d) *Attainment of a PSC allowance for Pacific herring.*

(1) *By the midwater pollock fishery.* If, during the fishing year, the Regional Dirctor determines that U.S. fishing vessels using trawl gear will catch the PSC allowances, or seasonal apportionment of the allowance, of Pacific herring while participating in the midwater pollock fishery as defined in paragraph (b)(4) of this section, the Secretary will publish a notice in the **Federal Register** closing the Herring Savings Areas to directed fishing for pollock with trawl gear.

(2) *By the DAP rock sole, DAP Greenland turbot, or the JVP flatfish fisheries.* If, during the fishing year, the Regional Director determines that U.S. fishing vessels using trawl gear will catch a PSC allowance or seasonal apportionment of a PSC allowance of Pacific herring while participating in either the DAP rock sole, DAP Greenland turbot, of JVP flatfish fisheries as defined in paragraph (b)(4) of this section, the Secretary will publish a notice in the **Federal Register** closing the Herring Savings Areas to directed fishing with trawl gear for rock sole, Greenland turbot, or JVP flatfish.

(3) *By the DAP flatfish fishery.* If, during the fishing year, the Regional Director determines that U.S. fishing vessels using trawl gear will catch a PSC allowance or seasonal apportionment of the PSC allowance of Pacific herring while participating in the DAP flatfish fishery as defined in paragraph (b) (4) of this section, the Secretary will publish a notice in the **Federal Register** closing the Herring Saving Areas to directed fishing with trawl gear for yellowfin sole and "other flatfish," in the aggregate.

(4) *By the DAP other fishery.* If, during the fishing year, the Regional Director determines that U.S. fishing vessels will catch the PSC allowance or seasonal apportionment of the PSC allowance of Pacific herring while participating in the "DAP other fishery" as defined in paragraph (b)(4) of this section, the Secretary will publish a notice in the **Federal Register** closing the Herring Savings Areas to directed fishing for:

(A) Pollock by trawl vessels using non-pelagic trawl gear; and (B) Pacific cod by vessels using trawl gear.

* * * * *

5. In § 675.24, paragraphs (c) introductory text, (c)(1), and (c)(2) are redesignated as paragraphs (c)(1) introductory text, (c)(1)(i), and (c)(1)(ii), newly redesignated paragraph (c)(1) introductory text is revised, and new paragraphs (c) introductory text, and (c)(2) are added to read as follows:

**§ 675.24 Gear limitations.**

* * * * *

(c) Gear allocations. (1) Vessels using gear types other than those specified in paragraphs (c)(1)(i) and (c)(1)(ii) of this section must treat sablefish as a prohibited species.

* * * * *

(2) The Secretary, in consultation with the Council, may limit the amount of pollock TAC that may be taken in the directed fishery for pollock using non-pelagic trawl gear. (i) The Regional Director must consider the following information when limiting the amount of pollock TAC that is apportioned to the directed fishery for pollock using non-pelagic trawl gear:

(A) The PSC limits and PSC bycatch allowances established under § 675.21 of this part;

(B) The projected bycatch of prohibited species that would occur with and without a limit in the amount of pollock TAC that may be taken in the directed fishery for pollock using non-pelagic trawl gear;

(C) The cost of a limit in terms of amounts of pollock TAC that may be taken with non-pelagic trawl gear on the non-pelagic and pelagic trawl fisheries; and

(D) Other factors pertaining to consistency with the goals and objectives of the FMP.

(ii) Proposed and final apportionment of pollock TAC to the directed fishery for pollock using non-pelagic trawl gear will be published in the **Federal Register** with the notices of proposed and final specifications defined in § 672.20(a)(7) of this part.

6. Figures 3 and 4 to part 675 are redesignated as Figures 4 and 5 and a new Figure 3 is added to read as follows:

BILLING CODE 3510-22-M

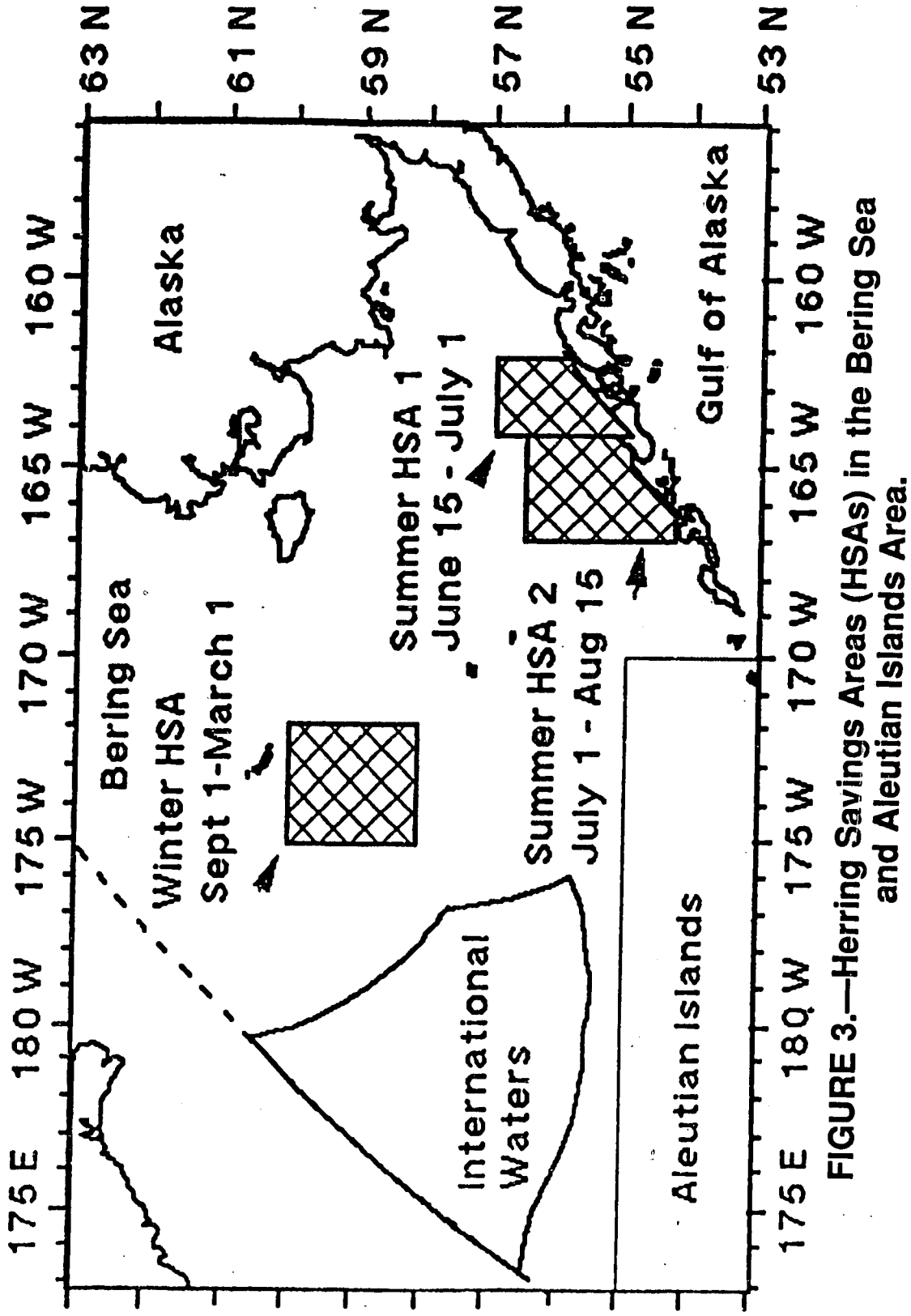


FIGURE 3.—Herring Savings Areas (HSAs) in the Bering Sea and Aleutian Islands Area.

[FR Doc. 91-16694 Filed 7-12-91; 2:15 pm]
BILLING CODE 3510-22-C

# Proposed Rules

Federal Register
Vol. 56, No. 138
Thursday, July 18, 1991

This section of the FEDERAL REGISTER contains notices to the public of the proposed issuance of rules and regulations. The purpose of these notices is to give interested persons an opportunity to participate in the rule making prior to the adoption of the final rules.

## DEPARTMENT OF TRANSPORTATION

### Federal Aviation Administration

### 14 CFR Part 71

[Airspace Docket No. 91-AEA-08]

### Proposed Revocation of Transition Area; Grundy, VA

**AGENCY:** Federal Aviation Administration (FAA), DOT.

**ACTION:** Notice of proposed rulemaking.

**SUMMARY:** The FAA is proposing to revoke the 700 foot Transition Area established at Grundy, VA, for the Grundy Municipal Airport. This action is deemed necessary due to the non-availability of any Standard Instrument Approach Procedures (SIAPs) to this airport. The cancellation of the SIAPs to this airport and other related actions concerning this proposal are contained in non-rulemaking case numbers 91-AEA-03-NR and 91-AEA-024-NR. Furthermore, a SIAP which has been unusable for several years (Grundy, VA, VOR/DME-A) would be removed by this action. The effect of this intended action is to return that amount of airspace not needed by the FAA to contain aircraft conducting operations conducted under an instrument flight plan, back to the public. Additionally, the airport status would be changed from IFR to VFR.

**DATES:** Comments must be received on or before August 19, 1991.

**ADDRESSES:** Send comments on the rule in triplicate to: Edward R. Trudeau, Manager, System Management Branch, AEA-530, Docket No. 91-AEA-08, F.A.A. Eastern Region, Federal Building #111, John F. Kennedy Int'l Airport, Jamaica, NY 11430.

The official docket may be examined in the Office of the Assistant Chief Counsel, AEA-7, F.A.A. Eastern Region, Federal Building #111, John F. Kennedy International Airport, Jamaica, New York 11430.

An informal docket may also be examined during normal business hours in the System Management Branch, AEA-530, F.A.A. Eastern Region, Federal Building #111, John F. Kennedy International Airport, Jamaica, NY 11430.

**FOR FURTHER INFORMATION CONTACT:** Mr. Curtis L. Brewington, Airspace Specialist, System Management Branch, AEA-530, F.A.A. Eastern Region, Federal Building #111, John F. Kennedy International Airport, Jamaica, New York 11430; telephone (718) 917-0857.

**SUPPLEMENTARY INFORMATION:**

#### Comments Invited

Interested parties are invited to participate in this proposed rulemaking by submitting such written data, views or arguments as they may desire. Comments that provide the factual basis supporting the views and suggestions presented are particularly helpful in developing reasoned regulatory decisions on the proposal. Comments are specifically invited on the overall regulatory, aeronautical, economic, environmental, and energy aspects of the proposal. Communications should identify the airspace docket and be submitted in triplicate to the address listed above. Commenters wishing the FAA to acknowledge receipt of their comments on this notice must submit with those comments a self-addressed, stamped postcard on which the following statement is made: "Comments to Airspace Docket No. 91-AEA-08". The postcard will be date/time stamped and returned to the commenter. All communications received before the specified closing date for comments will be considered before taking action on the proposed rule. The proposal contained in this notice may be changed in the light of comments received. All comments submitted will be available for examination in the Rules Docket both before and after the closing date for comments. A report summarizing each substantive public contact with FAA personnel concerned with this rulemaking will be filed in the docket.

#### Availability of NPRMs

Any person may obtain a copy of this Notice of Proposed Rulemaking (NPRM) by submitting a request to the Office of the Assistant Chief Counsel, AEA-7, F.A.A. Eastern Region, Federal Building #111, John F. Kennedy International Airport, Jamaica, NY 11430. Communications must identify the notice number of this NPRM. Persons interested in being placed on a mailing list for future NPRMs should also request a copy of Advisory Circular No. 11-2A which describes the application procedure.

#### The Proposal

The FAA is considering an amendment to § 71.181 of part 71 of the Federal Aviation Regulations (14 CFR part 71) to revoke the 700 foot Transition Area established at Grundy, VA, due to the non-availability of any SIAP to the Grundy Municipal Airport, Grundy, VA. Section 71.181 of part 71 of the Federal Aviation Regulations was republished in Handbook 7400.6G dated September 4, 1990.

The FAA has determined that this proposed regulation only involves an established body of technical regulations for which frequent and routine amendments are necessary to keep them operationally current. It, therefore: (1) Is not a "major rule" under Executive Order 12291; (2) is not a "significant rule" under DOT Regulatory Policies and Procedures (44 FR 11034; February 26, 1979); and (3) does not warrant preparation of a regulatory evaluation as the anticipated impact is so minimal. Since this is a routine matter that will only affect air traffic procedures and air navigation, it is certified that this proposed rule will not have a significant economic impact on a substantial number of small entities under the criteria of the Regulatory Flexibility Act.

#### List of Subjects in 14 CFR Part 71

Aviation safety, Transition areas.

#### The Proposed Amendment

Accordingly, pursuant to the authority delegated to me, the Federal Aviation Administration proposes to amend part 71 of the Federal Aviation Regulations (14 CFR part 71) as follows:

### PART 71—DESIGNATION OF FEDERAL AIRWAYS, AREA LOW ROUTES, CONTROLLED AIRSPACE, AND REPORTING POINTS

1. The authority citation for part 71 continues to read as follows:

Authority 49 U.S.C. 1348(a), 1354(a), 1510; Executive Order 10854; 49 U.S.C. 106(g) (Revised Pub. L. 97-449, January 12, 1983); 14 CFR 11.69.

**§ 71.181 [Amended]**

2. Section 71.181 is amended as follows:

**Grundy, VA [Removed]**

Issued in Jamaica, New York, on May 24, 1991.

**Gary W. Tucker,**

*Manager, Air Traffic Division.*

[FR Doc. 91-17088 Filed 7-17-91; 8:45 am]

BILLING CODE 4910-13-M

---

## 14 CFR Part 241

**[Docket No. 46597; Notice No. 91-11]**

**RIN 2137-AC14**

## Confidential Treatment of Form 41 Schedules B-7 and B-43

**AGENCY:** Office of the Secretary, DOT.

**ACTION:** Advance notice of proposed rulemaking (ANPRM).

**SUMMARY:** This notice solicits comments on whether the reporting provisions governing the submission of Form 41 Schedules B-7, Airframe and Aircraft Engine Acquisitions and Retirements, and B-43, Inventory of Airframes and Aircraft Engines should be amended so as to include a period of confidential treatment for information reported on one or both of these schedules. This notice responds to a request for rulemaking filed by United Air Lines, Inc.

**DATES:** Comments must be received on or before September 3, 1991.

**ADDRESSES:** Comments should be directed to the Docket Clerk, Docket 46597, Room 4107, Office of the Secretary, Department of Transportation, 400 Seventh Street, SW., Washington, DC 20590-0001. Comments should identify the regulatory docket number and be submitted in duplicate to the address listed above. Commenters wishing the Department to acknowledge receipt of their comments must submit with those comments a self-addressed stamped postcard on which the following statement is made: Comments on Docket No. 46597. The postcard will be date/time stamped and returned to the commenter. All comments submitted will be available for examination in the Rules Docket both before and after the closing date for comments.

**FOR FURTHER INFORMATION CONTACT:** M. Clay Moritz, Jr. or Jack M. Calloway, Office of Airline Statistics, DAI-1, Research and Special Programs Administration, Department of Transportation, 400 Seventh Street, SW., Washington, DC 20590-0001, (202) 366-4385 and 366-4383, respectively.

### Background

The issue of confidential treatment was first raised by United Air Lines' (United) motion of November 8, 1989, which requested the Department to withhold from public disclosure the acquisition costs and sales realization amounts for airframes and aircraft engines reported on its Schedule B-7, Airframe and Aircraft Engine Acquisitions and Retirements, for the quarter ended September 30, 1989 (Docket 46597). Subsequent motions were filed with every Schedule B-7 submitted since then (Dockets 46868, 46933, 47119, and 47254). United also filed a motion on March 28, 1990, for confidential treatment pertaining to the airframe and aircraft engine acquisition cost data reported on Schedule B-43, Inventory of Airframes and Aircraft Engines, the annual report covering calendar year 1989 (Docket 46869). In addition, American Airlines filed a motion dated August 9, 1990, for confidential treatment of its Schedule B-7 for the quarter ended June 30, 1990.

The Director of the Research and Special Programs Administration's (RSPA) Office of Airline Statistics, in a letter dated January 9, 1991, denied each of United's motions for confidential treatment. In response, United filed, on February 1, 1991, a petition for review of the staff action denying its motions. In its petition, United stated that it was not seeking exclusive confidentiality for its data, but rather, believes that aircraft acquisition costs and sales realization amounts should be held confidential for all carriers.

In urging the Department to review its staff action, United expressed its desire to have incorporated in the regulations governing the submission of B-7 and B-43 (14 CFR part 241.23, Schedule B-7 and Schedule B-43) a provision for the confidential treatment of the reported data. United also indicated that it planned to submit a petition for rulemaking requesting an amendment to part 241 to accord confidential treatment to the equipment price data on Schedules B-7 and B-43.

Pending action on its rulemaking petition, United requested that the Department grant its motions to withhold from public disclosure along with those of any other carrier requesting such relief. In a letter dated March 22, 1991, the Director, Office of Airline Statistics, granted United's request for a rulemaking to explore whether section 23 of part 241 of the Department's Economic Regulations should be amended to accord confidential treatment for the information reported on Form 41 Schedules B-7 and B-43. At the same time, the Director overturned his earlier decision by granting United's motions pending the outcome of this rulemaking proceeding.

In the same letter, the Director also indicated that in order not to prejudge the outcome of the rulemaking process and to preclude United from enjoying an advantage over other carriers by having its data withheld from the public eye, the Department would look favorably upon individual air carrier motions for confidential treatment of Form 41 Schedule B-7 and/or Form 41 Schedule B-43. This offer applied to the information reported on Schedule B-7 for the fourth quarter of 1990 and Schedule B-43 for the calendar year 1990. Carriers were also apprised of their right to file subsequent motions for confidential treatment for each successive filing of B-7 and B-43.

### Request for Comments

In order to thoroughly examine the issue of confidentiality of the information reported on Schedules B-7 and B-43, the Department requests additional information. All responses should address, as a minimum, the issues raised in the questions set forth below. For the convenience of those wishing to submit comments, a copy of Form 41 Schedules B-7 and B-43 is provided as Exhibit A and Exhibit B, respectively, to this Advance Notice of Proposed Rulemaking (ANPRM).

1. Is there a need to keep the information reported on Form 41 Schedule B-7 and/or Form 41 Schedule B-43 confidential?

Please explain, in detail, why the information should or should not be held confidential. Identify, by specific data element, the information on Schedules B-7 and B-43 that you believe should or should not be held confidential. Explain how the information does or does not qualify for confidential treatment given the governing body of law and regulation, namely the Freedom of Information Act (FOIA), 5 U.S.C. section 552, and the Department's regulations, Part 7 of Title 49 of the Code of Federal Regulations (49 CFR Part 7).

2. For what length of time should the information be held confidential? Please explain the specific reasons, by data element if necessary, for selecting a particular period of time.

**Consolidation of Dockets/Comment Period**

All previously docketed motions dealing with the confidential treatment of Form 41 Schedules B-7 and B-43 will be considered and consolidated in this rulemaking (Docket 46597). Previously docketed motions include eight motions filed by United Air Lines (Dockets 46597, 46868, 46869, 46933, 47119, 47254, 47485, and 47486); and one motion filed by American Airlines (Docket 47273). Furthermore, all motions received to date for the confidential treatment of the first quarter 1991 Form 41 Schedule B-7 have also been filed in reference to Docket 46497. Finally all future comments on any of the docketed motions, and on this rulemaking, should also be filed in this rulemaking docket.

Comments are due no later than 45 days after publication of this ANPRM in the **Federal Register**.

**Rulemaking Analyses and Notices**

**DOT Regulatory Policies and Procedures**

This ANPRM is not significant under the Department's Regulatory Policies and Procedures, dated February 26, 1979. Its economic impact should be minimal and a full regulatory evaluation is not required. There is no air carrier reporting burden associated with this rulemaking proposal. Any burden associated with this rulemaking if confidentiality is granted, would be borne solely by the Department, which would need to establish and maintain procedures for ensuring the confidentiality of the affected data.

**Executive Orders**

*Executive Order 12291*

This action has been reviewed under Executive Order 12291, and it has been determined that this is not a major rule. It will not result in an annual effect on the economy of $100 million or more. There will be no increase in production costs or prices for consumers, individual industries, Federal, state or local governments, agencies or geographic regions. Furthermore this ANPRM would not adversely affect competition, employment, investment, productivity, innovation, or the ability of United States-based enterprises to compete with foreign-based enterprises in domestic or export markets. These proposed regulations would not affect the reporting burden for large certificated air carriers. Accordingly, a regulatory impact analysis is not required.

*Executive Order 12612*

This action has been analyzed in accordance with the principles and criteria contained in Executive Order 12612 and it has been determined that this rulemaking action does not have sufficient federalism implications to warrant the preparation of a Federalism Assessment.

*Executive Order 12630*

This action has been analyzed in accordance with the principles and criteria contained in Executive Order 12630 and it has been determined that this rulemaking action does not pose the risk of a taking of constitutionally protected private property.

Legislative Acts

*Regulatory Flexibility Act*

I certify that this action will not have a significant economic impact on a substantial number of small entities. For purposes of its aviation economic regulations, Departmental policy categorizes certificated air carriers operating small aircraft (60 seats or less or 18,000 pounds maximum payload or less) in strictly domestic service as small entities for purposes of the Regulatory Flexibility Act. This ANPRM would affect only large certificated air carriers.

*Paperwork Reduction Act of 1980*

An information copy of this notice is being submitted to the Office of Management and Budget (OMB). This ANPRM would result in no change in air carrier reporting burden; therefore there is no need to submit a paperwork package to OMB for their approval. If confidentiality is granted the burden impact of this proposal would be borne solely by the Department which would be required to establish and maintain procedures for ensuring the confidentiality of the affected data. If a notice of proposed rulemaking is drafted subsequent to the issuance of this ANPRM, the rulemaking proposal will be submitted to the Office of Management and Budget for approval in accordance with 44 U.S.C. chapter 35.

**Regulatory Identification Number**

A regulatory information number (RIN) is assigned to each regulatory action listed in the Unified Agenda of Federal Regulations. The Regulatory Information Service Center publishes the Unified Agenda in April and October of each year. The RIN number contained in the heading of this document can be used to cross reference this action with the Unified Agenda.

**List of Subjects in 14 CFR Part 241**

Air carriers and Uniform System of Accounts and Reports.

Issued in Washington, DC on July 10, 1991.

Robin A. Caldwell,

*Director, Office of Airline Statistics.*

[FR Doc. 91-17074 Filed 7-17-91; 8:45 am]

BILLING CODE 4910-62-M

---

**ENVIRONMENTAL PROTECTION AGENCY**

**40 CFR PART 261**

**[SW-FRL-3974-6]**

## Hazardous Waste Management System; Identification and Listing of Hazardous Waste; Proposed Use of EPA's Composite Model for Landfills (EPACML) and Proposed Exclusion

**AGENCY:** Environmental Protection Agency (EPA).

**ACTION:** Proposed rule and request for comment.

**SUMMARY:** Today's notice announces the Environmental Protection Agency's (EPA or Agency) proposal to use the EPA's Composite Model for Landfills (EPACML) in the evaluation of a delisting petition. Based on waste-specific information provided by the petitioner, the Agency is proposing to use the EPACML fate and transport model to evaluate the impact of the petitioned waste on human health and the environment.

Today's proposal provides background information on the mechanics of the EPACML, and the use of the EPACML in delisting decision-making. Based on its evaluation using the EPACML, the Agency today is proposing to grant a petition submitted by Reynolds Metals Company (Reynolds), Bauxite, Arkansas, to conditionally exclude certain solid wastes to be generated by its thermal treatment process from the lists of hazardous wastes contained in 40 CFR 261.31 and 261.32. This action responds to a delisting petition submitted under 40 CFR 260.20, which allows any person to petition the Administrator to modify or revoke any provision of parts 260 through 265 and 268 of title 40 of the Code of Federal Regulations, and under 40 CFR 260.22, which specifically provides generators the opportunity to petition the Administrator to exclude a waste on a "generator-specific" basis from the hazardous waste lists. Today's proposed decision is based on an evaluation of process and waste-specific information provided by the petitioner.

**DATES:** EPA is requesting public comments on today's proposed exclusion and on the applicability of the EPACML to this proposal. Comments

will be accepted until September 3, 1991. Comments postmarked after the close of the comment period will be stamped "late".

Any person may request a hearing on the proposed decision by filing a request with the Director, Characterization and Assessment Division, Office of Solid Waste, whose address appears below, by August 2, 1991. The request must contain the information prescribed in 40 CFR 260.20(d).

**ADDRESSES:** Send three copies of your comments to EPA. Two copies should be sent to the Docket Clerk, Office of Solid Waste (OS-305), U.S. Environmental Protection Agency, 401 M Street, SW., Washington, DC 20460. A third copy should be sent to Jim Kent, Delisting Section, Waste Identification Branch, CAD/OSW (OS-333), U.S. Environmental Protection Agency, 401 M Street, SW., Washington, DC 20460. Identify your comments at the top with this regulatory docket number: "F-91-CML-FFFFF".

Requests for a hearing should be addressed to Director, Characterization and Assessment Division, Office of Solid Waste (OS-330), U.S. Environmental Protection Agency, 401 M Street, SW., Washington, DC 20460.

The RCRA regulatory docket for this proposed rule is located at the U.S. Environmental Protection Agency, 401 M Street, SW. (room M2427), Washington, DC 20460, and is available for viewing from 9 a.m. to 4 p.m., Monday through Friday, excluding Federal Holidays. Call (202) 475-9327 for appointments. The public may copy material from any regulatory docket at a cost of $0.15 per page.

**FOR FURTHER INFORMATION CONTACT:** For general information, contact the RCRA Hotline, toll free at (800) 424-9346, or at (703) 920-9810. For technical information concerning this proposed rule, contact Chichang Chen, Office of Solid Waste (OS-333), U.S. Environmental Protection Agency, 401 M Street, SW., Washington, DC 20460, (202) 382-7392.

**SUPPLEMENTARY INFORMATION:**

Preamble Outline

I. Proposed Use of EPACML for Delisting Evaluations
A. Background
1. Authority
2. Use of Models for Delisting Evaluations
a. Reasonable Worst-Case Disposal Scenarios
b. The VHS Model
c. Public Comments on the VHS Model
3. Development of the EPACML
a. The Final Toxicity Characteristics Rule
b. Public Comments on the Planned Use of the EPACML for Delisting
4. Benefits of Replacing the VHS Model with the EPACML for Delisting
B. Summary of the EPACML
1. Description of the EPACML
a. Disposal Scenario Assumptions
b. Fate and Transport Processes
c. Input Parameters and Data Sources
d. Monte Carlo/Uncertainty Analysis
2. Modifications of the EPACML for Delisting
a. Conversion of Delisting Waste Volumes to Disposal Unit Area
b. Use of a "Scaling Factor" for Accumulation of Wastes Over Multiple Years (and Possible Codisposal with Similar Wastes)
3. Dilution/Attenuation Factors (DAFs)
a. Selection of an Appropriate DAF Percentile
b. Delisting DAFs for Landfills
c. Delisting DAFs for Surface Impoundments
d. Comparison of Characteristics and Delisting DAFs
C. Use of the EPACML in Delisting Evaluations
1. General Approach
2. Selection of Landfill or Surface Impoundment Disposal Scenario
3. Impact on Information Needed from Delisting Petitioners
II. Proposed Exclusion
A. Background
1. Approach Used to Evaluate This Petition
B. Disposition of Delisting Petition
1. Reynolds Metals Company, Gum Springs, Arkansas
a. Petition for Exclusion
b. Background
c. Agency Analysis
d. Agency Evaluation
e. Conclusion
f. Verification Testing Conditions
III. Effective Date
IV. Regulatory Impact
V. Regulatory Flexibility Act
VI. Paperwork Reduction Act
VII. List of Subjects in 40 CFR Part 261

## I. Proposed Use of EPACML for Delisting Evaluations

### *A. Background*

#### 1. Authority

On January 16, 1981, as part of its final and interim final regulations implementing section 3001 of RCRA, EPA published an amended list of hazardous wastes from non-specific and specific sources. This list has been amended several times, and is published in 40 CFR 261.31 and 261.32. These wastes are listed as hazardous because they typically and frequently exhibit one or more of the characteristics of hazardous wastes identified in subpart C of part 261 (*i.e.*, ignitability, corrosivity, reactivity, and toxicity) or meet the criteria for listing contained in 40 CFR 261.11 (a)(2) or (a)(3).

Individual waste streams may vary, however, depending on raw materials, industrial processes, and other factors. Thus, while a waste that is described in these regulations generally is hazardous, a specific waste from an individual facility meeting the listing description may not be. For this reason, 40 CFR 260.20 and 260.22 provide an exclusion procedure, allowing persons to demonstrate that a specific waste from a particular generating facility should not be regulated as a hazardous waste.

To have their wastes excluded, petitioners must show that wastes generated at their facilities do not meet any of the criteria for which the wastes were listed. See 40 CFR 260.22(a) and the background documents for the listed wastes. In addition, the Hazardous and Solid Waste Amendments (HSWA) of 1984 require the Agency to consider any factors (including additional constituents) other than those for which the waste was listed, if there is a reasonable basis to believe that such additional factors could cause the waste to be hazardous. Accordingly, a petitioner also must demonstrate that the waste does not exhibit any of the hazardous waste characteristics (*i.e.*, ignitability, reactivity, corrosivity, and toxicity), and must present sufficient information for the Agency to determine whether the waste contains any other toxicants at hazardous levels. See 40 CFR 260.22(a), 42 U.S.C. 6921(f), and the background documents for the listed wastes. Although wastes which are "delisted" (*i.e.*, excluded) have been evaluated to determine whether or not they exhibit any of the characteristics of hazardous waste, generators remain obligated under RCRA to determine whether or not their waste remains non-hazardous based on the hazardous waste characteristics.

In addition to wastes listed as hazardous in 40 CFR 261.31 and 261.32, residues from the treatment, storage, or disposal of listed hazardous wastes and mixtures containing hazardous wastes are also considered hazardous wastes. Such wastes are also eligible for exclusion and remain hazardous wastes until excluded. See 40 CFR 261.3 (c) and (d)(2). The substantive standards for "delisting" a treatment residue or a mixture are the same as previously described for listed wastes.

If a petitioned waste is granted an exclusion by the Agency (*i.e.*, delisted), the waste is no longer controlled under federal hazardous waste regulations and the petitioner must manage and dispose of the waste according to local and state requirements or specifications.

In some cases, the Agency grants an exclusion conditioned upon the facility or waste meeting certain requirements. For example, for wastes that are highly variable in composition, the Agency

often imposes post-exclusion testing requirements that the petitioner must meet prior to waste disposal. Only those batches of waste that have passed the verification testing conditions provided in the final exclusion could be managed as non-hazardous wastes; failing batches must be managed as hazardous.

2. Use of Models for Delisting Evaluations

During a delisting determination, the Agency often uses fate and transport models to predict the concentration of hazardous constituents that may be released from petitioned wastes after disposal to determine the potential impact on human health and the environment. An appropriate transport model has been used to estimate the potential impact of the leachable hazardous constituents on the underlying aquifer. Specifically, the Agency has used the maximum estimated waste volume and the maximum reported leachate concentrations as inputs to estimate the constituent concentrations in the ground water at a hypothetical receptor well downgradient from the disposal site.The calculated receptor well concentrations (referred to as compliance-point concentrations) were then compared directly to the health-based levels used in delisting decision-making for the hazardous constituents of concern.

a. *Reasonable Worst-Case Disposal Scenarios.* EPA's approach when applying fate and transport models has been to represent a reasonable worst-case waste disposal scenario for the petitioned waste rather than use site-specific factors. The Agency believes that a reasonable worst-case scenario is appropriate when determining whether a waste should be relieved of the protective management constraints of RCRA subtitle C. The use of a reasonable worst-case scenario results in conservative values for the compliance-point concentrations and ensures that the waste, once removed from hazardous waste regulation, will not pose a threat to human health or the environment if the petitioner chooses to dispose of the waste in accordance with subtitle D requirements. Site-specific factors (*e.g.*, site hydrogeology) are not considered because a delisted waste is no longer subject to hazardous waste control, and therefore, the Agency is generally unable to predict and does not control how a waste will be managed after delisting.

b. *The VHS Model.* Under a landfill or surface impoundment disposal scenario, the plausible exposure route of most concern to the Agency is ingestion of contaminated ground water. To evaluate land-disposed wastes, the Agency has used the Vertical and Horizontal Spread (VHS) model (see 50 FR 7896, February 26, 1985, and 50 FR 48896, November 27, 1985 for details). The VHS model approximates the transport processes likely to occur in an aquifer below a waste disposal site. The model predicts the dilution of the contaminants in a drinking water aquifer as a result of dispersion in the vertical and horizontal directions.

The waste-specific parameters used in the VHS model are the leachate concentrations of constituents of concern and the annual volume of the petitioned waste. The leachate concentration is determined by laboratory analysis, *i.e.*, the Extraction Procedure (EP) or the Toxicity Characteristic Leaching Procedure (TCLP) for constituents of concern.

In applying the VHS model, the Agency made a variety of assumptions to account for a reasonable worst-case disposal scenario. The VHS model assumes that the waste is disposed in a 40-foot wide, 8-foot deep trench in an unlined municipal landfill. The length of the trench is a function of the volume of the petitioned waste. The model assumes an infinite source of waste and no aquifer recharge. The model mathematically simulates the migration of toxicant-bearing leachate from the waste into the uppermost underlying aquifer, and the subsequent dilution of the toxicants due to dispersion within the aquifer. The Agency used this model to predict the maximum concentration of the diluted toxicants at a hypothetical receptor well (or compliance point) located 500 feet from the disposal site. The model does not consider biodegradation, sorption, hydrolysis, or unsaturated soil conditions.

c. *Public Comments on the VHS Model.* The Agency has received comments on the VHS model in notices announcing the use of the VHS and in proposed petition denials and exclusions. In general, the comments expressed concern about ability of the VHS to consider large waste volumes, wastes stored in surface impoundments, unsaturated soil conditions, groundwater recharge, and longitudinal contaminant dispersion in the aquifer.

The Agency acknowledged that the VHS has some limitations, but maintained that the use of the VHS was appropriate until a more sophisticated model was developed that would account for these waste disposal assumptions and transport processes.

3. Development of the EPACML

a. *The Final Toxicity Characteristics Rule.* On June 13, 1986, EPA proposed an approach (see 51 FR 21648) for estimating regulatory levels of hazardous constituents in a waste leachate using chronic toxicity reference levels, combined with constituent-specific dilution/attenuation factors (DAFs) derived from the application of a subsurface fate and transport model (EPASMOD). On August 1, 1988 (53 FR 28892), EPA requested comments on revisions to EPASMOD that were being considered by the Agency. The revisions were incorporated and EPASMOD was subsequently referred to as EPACML. In the TC Final Rule (55 FR 11798, March 29, 1990), the EPACML was used to support the choice of appropriate DAFs for the development of TC regulatory levels.

The EPACML simulates the movement of contaminants from a subtitle D (i.e., municipal solid waste) waste management unit and migration through the subsurface environment to a potential drinking-water well. The EPACML accounts for one-dimensional steady and uniform advective flow; contaminant dispersion in the longitudinal, lateral, and vertical directions; sorption; and chemical degradation from hydrolysis. The EPACML estimates a DAF for contaminants, which represents a reduction in the concentration expected to occur during transport through soil and ground water from the leachate release point (bottom of the waste management unit) to an exposure point (a receptor well serving as a drinking-water supply, referred to as a compliance point).

The Agency used the EPACML to investigate the expected range of DAFs associated with the mismanagement of solid wastes. DAFs were used to identify wastes whose leaching behavior indicates that they pose a hazard to human health unless they are controlled under Subtitle C management standards. Specifically, the regulatory levels promulgated under the TC rule are supported by DAFs generated from the EPACML.

b. *Public Comments on the Planned Use of the EPACML for Delisting.* In the August 1, 1988 proposal of the TC rule, EPA solicited comments on the use of the EPACML model in the delisting program. Although most commenters agreed that there are fundamental differences between the various elements of the hazardous waste listing and the corresponding elements in the delisting program, all commenters supported the use of the EPACML in the delisting program. In response to these comments, EPA stated in the final TC rule that the EPACML would be used for

delisting program in the future (see 55 FR 11833; March 29, 1990).

4. Benefits of Replacing the VHS Model With the EPACML for Delisting

As stated above, the comments received by the Agency supported the use of EPACML in the delisting program. The EPACML addresses comments about the VHS model, including consideration of an unsaturated zone, ground-water recharge, evaluation of large waste volumes and longitudinal dispersion. Rather than using single values for each input parameter, as is the case with the VHS model, EPACML uses a range of values for each input parameter that are based on national surveys of actual disposal facilities, laboratory and field measurements, and best available literature sources. The uncertainty in the input parameters and the range of possible combinations of different input values are quantified using a Monte Carlo simulation technique.

The use of EPACML by delisting provides consistency between the characteristics and delisting programs and maintains the current delisting approach for considering waste volume and reasonable worst-case disposal scenarios. In addition, the use of EPACML by delisting does not add complexity to or increase the time required for a delisting evaluation.

*B. Summary of the EPACML*

1. Description of the EPACML

As discussed previously in today's proposed rule, the EPACML was developed to predict the transport of hazardous constituents through soil and ground water from a waste management unit to a compliance point (a receptor well serving as a drinking-water supply). The output of the EPACML, the dilution/attenuation factor (DAF), represents the reduction in contaminant concentration resulting from subsurface processes such as adsorption, three-dimensional dispersion, and dilution from ground-water recharge.

The DAF is obtained by dividing the contaminant concentration in leachate leaving the disposal unit by the concentration in the receptor well predicted by the EPACML. For example, if the leachate concentration of the waste in the disposal unit is 10 ppm and the predicted contaminant concentration in the receptor well is 1 ppm, then the DAF for the contaminant would be 10. Actual use of the DAF in the evaluation of petitioned wastes is discussed in section I.C.

The EPACML uses a Monte Carlo simulation technique to account for the wide range of hydrogeologic settings found at municipal waste landfills, and to account for the uncertainty in the input data. The Monte Carlo procedure randomly selects values from frequency distributions developed for each input parameter and results in a cumulative frequency distribution of DAFs. Details of the Monte Carlo method are described in detail in section I.B.1.d.

The method the Agency used to apply EPACML to delisting is similar to its application for the TC rule, except for some modifications made to reflect the criteria currently used for delisting evaluations. Specifically, petitioned wastes are evaluated based on the volume of the waste and the leachable concentrations of the constituents of concern found in the waste. However, the EPACML requires as an input parameter the area of a disposal unit. Therefore, the Agency developed a procedure to convert the volume of a petitioned waste to the disposal unit area required by the EPACML. This procedure is described in detail in the docket in today's notice. Otherwise, the fate and transport assumptions and input data are the same as those used for the TC rule and are summarized here.

For additional information about the development and the use of the EPACML, the reader is referred to the TC rule (55 FR 11798, March 29, 1990) and to the Background Document for the EPACML contained in the docket in today's notice. This background document presents in detail each of the technical issues raised in the public comments on the model and the Agency's response to these issues.

a. *Disposal Scenario Assumptions.* The Agency developed the EPACML model to evaluate the fate and transport of hazardous constituents released from waste disposed in landfills. During the development of the TC rule, the Agency received comments about the need to consider the fate and transport of wastes disposed in surface impoundments. In response, the Agency used data relevant to a surface impoundment scenario with the EPACML to simulate migration from an impoundment. The assumptions associated with both the landfill and surface impoundment disposal scenario and the input data necessary to evaluate surface impoundments using the EPACML are discussed below.

The selection of the disposal scenario assumption determines the method of selecting input parameters that are subsequently used to compute leachate infiltration rate. For landfills, the Hydrologic Evaluation of Landfill Performance (HELP) model (Ref. 1) was used to determine the leaching rate from landfills. The HELP model calculates leachate flux as a function of landfill cap, climatologic data, surface runoff, and percolation. Leaching rates from surface impoundments were estimated by considering the relationship between vertical groundwater velocity, the porosity and permeability of subsurface materials and the solution of the nonlinear steady state flow problem. Leachate rates from surface impoundments also consider the depth of ponding in the impoundment and the thickness and permeability of the sludge layer at the bottom of the impoundment. The reader is referred to the background documents in the docket for the details of the assumptions associated with each disposal scenario.

b. *Fate and Transport Processes.* The EPACML fate and transport model consists of an unsaturated zone module and a saturated zone module, both of which were reviewed and endorsed by EPA's Science Advisory Board (SAB). Each module is based on a number of key assumptions pertaining to ground-water flow, subsurface characteristics, and the behavior of hazardous constituents. These assumptions were necessary to develop mathematical representations of the fate and transport processes considered. Selection of the assumptions was based on their relative significance in modeling the transport of contaminants, the availability of data required for the assumption, and the ability to develop mathematical solutions for the models.

The unsaturated and saturated zone modules are best described by summarizing the assumptions each uses to model unsaturated zone flow and contaminant transport. The major assumptions for flow in the unsaturated zone include:

- Flow is steady in the vertical direction, and negligible in the lateral and transverse directions;
- No vapor phase or immiscible liquid flow occurs, and the water phase is the only flowing material;
- Flow is isothermal;
- Effects of variations in the unsaturated zone hydraulic properties caused by alternating moisture conditions (hysteresis) are negligible;
- The flow field is uniform and continuous in direction and velocity; and
- The unsaturated zone is homogeneous and isotropic.

The major assumptions used to model contaminant transport in the unsaturated zone are:

• Chemical transport is vertical; lateral and transverse transport is negligible;

• Chemical sorption is modeled as a reversible, linear equilibrium process;

• Vapor phase transport of chemicals is negligible; and

• Unsaturated zone transport of chemicals is solved for the steady-state condition.

Ground-water flow and contaminant transport in the saturated zone are based on the following assumptions:

• Ground-water flow regions are of infinite extent in the longitudinal direction, semi-infinite extent in the lateral direction, and finite in the vertical direction;

• The aquifer is homogeneous and isotropic with a constant thickness;

• Ground-water flow is uniform and continuous in direction and velocity;

• Recharge, as a result of precipitation, supplies water to the disposal unit and the aquifer;

• The ground water upstream of the disposal site is initially free of contamination;

• An infinite source supplies a constant mass flux of chemical into the aquifer;

• Contaminants follow a linear equilibrium adsorption isotherm;

• Receptor well locations are anywhere within the areal extent of the contaminant plume.

These assumptions and the mathematical methods used to model them are described in greater detail in the Background Document for EPACML (Ref. 2).

c. *Input Parameters and Data Sources.* The modeling assumptions and the Monte Carlo simulation method (described in detail in section I.B.1.d) define the data requirements for applying the EPACML. Specifically, the Monte Carlo method randomly selects values from frequency distributions of each input parameter. Therefore, the information required for each input parameter includes: the type of frequency distribution (*e.g.*, normal, exponential) and summary statistics such as mean, standard deviation and range of values (minimum and maximum). The data sources and analyses performed to obtain the frequency distributions are described in detail in the background documents for the EPACML (Ref. 2) and are summarized here.

The input data required by the EPACML consists of several types of data: source (disposal unit) data, chemical constituent data, unsaturated zone data, and aquifer data. Values for each of these types of data were obtained from Agency surveys, laboratory and field measurements, and best available literature sources.

The Agency used source and site-specific data from the OSW Survey of Solid Waste Landfills (Ref. 3) to obtain values for disposal unit area, distance to the closest downgradient drinking water wells, and thickness of the unsaturated zone. The Agency used this survey data to develop the method to convert waste volume to landfill disposal unit area, as described in I.B.2.a below and in the background document (Ref. 2). In addition, the Agency has obtained a set of data on Subtitle D surface impoundments, including disposal unit volumes and depths (Ref. 4).

The OSW survey contains data for a representative range of aquifer types in the country, including values for saturated zone thickness, ground-water pH, particle diameter and fraction of organic carbon. Dispersivity values are computed as a function of distance to the receptor well based on a detailed analysis of data gathered from field tests. Seepage velocity, hydraulic conductivity, and porosity are derived from particle diameter and other parameters using analytical equations.

Climatologic and soils data were used to compute frequency distributions of leachate flux from the disposal unit. The Agency obtained national climatologic data from 100 stations for precipitation and evaporation data that are based on 20-year climatic records. Soils data were acquired from the US Soil Conservation Service (SCS) to determine landfill cover and unsaturated zone soil properties.

A complete list of all input parameters and their frequency distributions is presented in the background document (Ref. 2). It is to be noted that a recent statistical analysis (based on comparison with a hydrogeologic database developed from a national survey of National Water Well Association members (Ref. 5)) supported the Agency's use of the OSW landfill survey data. In particular, this publication concluded that the statistical distributions used by EPA for the two most important hydrogeologic parameters used in the model, seepage velocity and hydraulic conductivity, are sound.

d. *Monte Carlo/Uncertainty Analysis.* Data are incorporated into the EPACML using a Monte Carlo procedure. The Monte Carlo procedure randomly selects values from a frequency distribution for each parameter. The model is run a sufficient number of times (typically several thousand) to produce a frequency distribution of the model's output (DAF's). The output frequency distribution represents a full range of interactions of each individual parameter and can be viewed as a ranked order of increasingly higher downgradient concentrations, from the "best-case" situations at a low cumulative frequency (large DAFs) to the "worst-case" situations at high cumulative frequencies (small DAFs) for the scenario being investigated (55 FR 11826; March 29, 1990).

Monte Carlo simulation was chosen as the preferred method to evaluate a variety of land disposal scenarios and to account for the uncertainty inherent in the input data. The wide range of environmental conditions (*e.g.*, ground-water velocities, ground-water pH, exposure point/receptor well locations) found at disposal sites across the nation makes the selection of a reasonable worst-case for each input parameter difficult.

Further justification for the use of the Monte Carlo method is provided by the very complex manner in which the many model parameters interact. Unless many (hundreds to thousands) combinations of variables are investigated, it is simply not possible to account for the wide range of physical settings found at various disposal sites. Therefore, the Monte Carlo method was utilized to ensure a conservative yet physically reasonable estimation of contaminant fate and transport.

2. Modifications of the EPACML for Delisting

a. *Conversion of Delisting Waste Volumes to Disposal Unit Areas.* As described previously in today's proposed rule, the waste-specific data used in delisting evaluations are the maximum waste volume and the maximum leachable concentrations of constituents in the waste. To use the EPACML for delisting evaluations, the area of the waste management unit, rather than the maximum waste volume, is used as an input parameter to the EPACML.

The conversion of waste volume to disposal unit area was part of the pre-processing calculation for the EPACML. The preprocessing calculation correlates waste volume with disposal unit area via a regression equation developed from national data on disposal unit dimensions contained in the OSW Survey. This calculation uses the regression equation to develop frequency distributions of disposal unit areas, taking into consideration the regression variance to account for the uncertainty in the volume/area relationship. Methods to convert waste volume to disposal unit area were developed for both landfills and surface impoundments (Ref. 6).

b. *Use of a "Scaling Factor" for Accumulation of Wastes Over Multiple Years (and Possible Co-disposal with Similar Wastes).* The delisting program primarily receives petitions for wastes generated on an on-going basis (*i.e.*, a petition is based on an annual waste generation rate). To account for the total amount of waste generated and ultimately placed in a landfill, the Agency has chosen to multiply the annual waste volume by a factor of 20, based on the assumption of a 20-year active lifetime of a municipal subtitle D unit. This conservative assumption is based on the average active life of Subtitle D disposal facilities in the U.S. (Ref. 7).

Petitions are also occasionally submitted for wastes that have been placed in a waste management unit, but are no longer being generated (*i.e.*, a petition for a one-time exclusion). In order to maintain a consistent delisting evaluation methodology for the landfill scenario, the Agency believes it is generally appropriate to also use the same scaling factor of 20 for these one-time exclusions. In this way, the Agency would discourage petitions for intermittently generated batches of waste, which could not be delisted based on total volume, but may pass the volume-based delisting evaluation when evaluated separately. However, in some cases the Agency believes the use of a factor of 20 may not be appropriate for one-time exclusions. That is, if the petitioner can conclusively demonstrate that the waste is no longer being generated, it will not be generated in the future, and no other similar waste is stored or disposed of on-site, then the factor of 20 seems unwarranted. Therefore, the Agency intends to evaluate petitions for one-time exclusions on a case-by-case basis.

For wastes that are likely to be disposed in surface impoundments, the Agency will determine the size of the unit based on the maximum annual waste generation rate. The Agency is assuming that most active surface impoundments generally utilize a continual flow-through of liquid, *i.e.*, liquid waste is discharged to a surface impoundment, solids are allowed to settle and the remaining liquid is discharged via an NPDES permit. Retention times for liquids in surface impoundments range from hours to hundreds of days (Surface Impoundment Survey, Ref. 8). In addition, sludge that accumulates at the bottom of a surface impoundment may, in some cases, be removed to maintain the active life of the surface impoundment. Therefore, the Agency has chosen to use the annual volume of liquid wastes to determine the size of surface impoundments. The Agency believes that using the volume of liquid waste generated over 20 years to determine the size of the impoundment is unnecessary and unreasonable given the continual flow through of liquid. One-time surface impoundment wastes will also be sized based on the reported volume of stored liquid waste.

3. Dilution/Attenuation Factors (DAFs)

a. *Selection of an Appropriate DAF Percentile.* The EPACML Monte Carlo simulation yields a probability distribution of DAFs. Therefore, the selection of the DAF percentile is essentially a selection of the level of confidence in the DAF value. In other words, the DAF percentile expresses the probability that a toxic constituent disposed of in a municipal solid waste landfill will undergo certain dilution/attenuation as it moves through a subsurface environment to an exposure point (55 FR 11826, March 29, 1990). The DAF value depends on the selected probability or DAF percentile.

The characteristics program used the 85th percentile DAF to set regulatory levels. The characteristics program is designed to identify those wastes that should be subject to hazardous waste regulations; characteristics levels are those equal to or above which a waste is clearly hazardous. However, wastes may still be hazardous even if they leach hazardous constituents at levels less than the TC regulatory levels.

The delisting program is meant to define those wastes that can be let out of the hazardous waste system; delisting regulatory levels are those below which a waste is clearly nonhazardous. Therefore, the Agency believes it is appropriate that the delisting program be more stringent than the characteristics program.

The Agency suggested in the final TC rule that more stringent DAF percentiles may be used when input parameters are more narrowly defined. The disposal unit area (as a function of petitioned waste volume) has been more narrowly defined for delisting, and the delisting application of EPACML produces a distribution of DAFs for fixed volumes of waste. The TC rule application of the EPACML randomly selected disposal unit size (*i.e.*, waste volume) from the entire range of landfill sizes represented in the OSW landfill survey.

The Agency believes it is justified in selecting a confidence level for the EPACML as adapted for delisting that is more stringent than the 85th percentile chosen to define the TC. Therefore, the Agency is proposing to use the 95th percentile DAFs for delisting. The Agency believes the 95th percentile represents a conservative and reasonable worst-case disposal scenario for delisted wastes.

The 95th percentile confidence level also represents a conventional level of significance that is frequently used in statistical evaluations. For example, when evaluating ground-water monitoring data for hazardous waste management facilities, as required by 40 CFR 264.97, the Agency uses a confidence level of 95% for determining constituent concentrations in multiple-well comparisons (53 FR 39728; October 11, 1988). Since the goals of the delisting and RCRA ground-water monitoring programs are similar, *i.e.*, determining if wastes are releasing hazardous constituents to ground water at levels above health-based thresholds, the Agency believes the use of the same statistical significance level is appropriate.

b. *Delisting DAFs for Landfills.* EPACML analyses for landfills produced DAFs for a range of petitioned waste volumes that might be considered by the delisting program. The resulting DAF curve for landfills is shown in Exhibit 1, and representative DAF values for selected volumes are given in Table 1. The results are consistent with the expected degree of dilution as a function of waste volumes; *i.e.*, leachate from small waste volumes undergoes a greater degree of dilution than large waste volumes. It can also be noted that the highly non-linear nature of the curve (rapid decrease in DAF as waste volume increases) may provide an additional disincentive for dilution of wastes to decrease the concentration of hazardous constituents (*i.e.*, dilution of a waste will result in higher volumes and, therefore, lower DAFs). The Agency believes that the use of a "sliding scale" based on volume to evaluate delisting petitions may also provide incentives to petitioners to minimize waste generation.

BILLING CODE 6560-50-M

Exhibit I

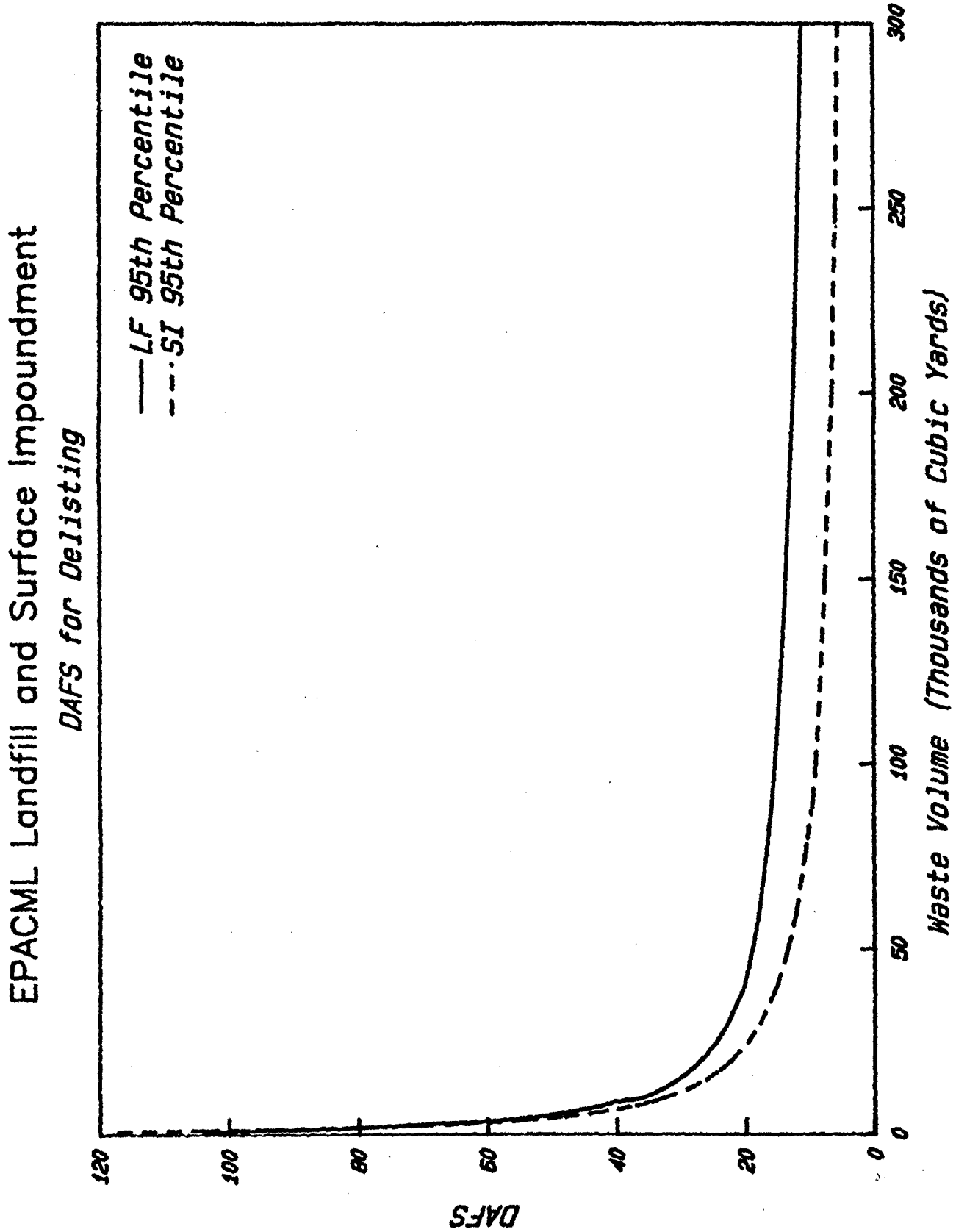


BILLING CODE 6560-50-C

TABLE 1.—DAFS FOR LANDFILLS AND SURFACE IMPOUNDMENTS

| Waste volume (cubic yards per year) | 95th percentile | |
|---|---|---|
| | Landfill | Surface impound-ments |
| 1,000 | [1]100 | [1]100 |
| 1,250 | 96 | [1]100 |
| 1,500 | 90 | 93 |
| 1,750 | 84 | 85 |
| 2,000 | 79 | 78 |
| 2,500 | 74 | 68 |
| 3,000 | 68 | 63 |
| 4,000 | 57 | 54 |
| 5,000 | 54 | 48 |
| 6,000 | 48 | 43 |
| 7,000 | 45 | 41 |
| 8,000 | 43 | 36 |
| 9,000 | 40 | 35 |
| 10,000 | 36 | 34 |
| 12,500 | 33 | 29 |
| 15,000 | 29 | 26 |
| 20,000 | 27 | 23 |
| 25,000 | 24 | 20 |
| 30,000 | 23 | 18 |
| 40,000 | 20 | 15 |
| 50,000 | 19 | 13 |
| 60,000 | 17 | 12 |
| 80,000 | 17 | 10 |
| 90,000 | 16 | 10 |
| 100,000 | 15 | 9 |
| 150,000 | 14 | 7 |
| 200,000 | 13 | 6 |
| 250,000 | 12 | 6 |
| 300,000 | 12 | 6 |

[1] DAF cutoff is 100 corresponding to the Toxicity Characteristic Rule.

c. *Delisting DAFs for Surface Impoundments.* EPACML analyses for surface impoundments also produced DAFs for a range of petitioned waste volumes. Exhibit 1 shows that the surface impoundment DAFs for the 95th percentile are somewhat lower than the landfill DAFs despite the use of a scaling factor of 20 for the landfill DAFs, compared to a factor of one for the impoundment scenario. This is a function of the relatively higher infiltration rate for surface impoundments, as a result of the liquid in the surface impoundment and subsequent increase in hydraulic head. The difference between landfills and surface impoundments becomes more pronounced as volume increases. The Agency believes that the use of lower DAFs for surface impoundments than landfills is representative of the higher leachate flux that may potentially occur at surface impoundments.

d. *Comparison of Characteristics and Delisting DAFs.* The range of disposal unit areas (petitioned waste volumes) and the use of a higher DAF percentile for delisting have resulted in DAF values that are different than those promulgated for characteristic wastes. As noted previously, the Agency believes it is appropriate for delisting levels to be more conservative than characteristic levels that define wastes that are clearly hazardous. The Agency believes that the use of waste volume as a determining factor in delisting is consistent with the criteria used to define waste as hazardous through the listing of hazardous waste (see 40 CFR 261.11(a)(3)(viii)).

The Agency believes that the EPACML provides a "continuum" for the definition of hazardous waste, from the TC level (DAF of 100) to a DAF of approximately 10 based on the volume of waste. Note that this is an incentive to minimize waste and a disincentive to dilute wastes to meet delisting levels. The delisting regulations (40 CFR 260.22(d)(3)) preclude delisting any waste that exhibits a Characteristic, including the TC. Therefore, DAFs used in delisting will not exceed the DAF of 100 that serves as the basis for the regulatory TC levels, and delisting DAFs for waste volumes below 1,000 cubic yards will not increase above 100.

*C. Use of the EPACML in Delisting Evaluations*

1. General Approach

The Agency intends to use the EPACML (modified for delisting purposes), when appropriate, as a tool to estimate the concentration of contaminants in ground water that could result from a potential contaminant release from a waste disposal unit. The EPACML allows the Agency to determine the effect the petitioned waste could have on human health if it is not managed as a hazardous waste. The Agency considered the results of the model evaluation as a factor in proposing to exclude waste from the lists of hazardous waste in subpart D of 40 CFR part 261 in today's notice (see section II).

The typical input parameters for the EPACML in the delisting process are the constituent leachate concentration, the type of waste unit (*i.e.*, landfill or surface impoundment) and the volume of the petitioned waste. The EPACML allows a "sliding-scale" approach to be used to determine the DAF value based on a specific petitioned waste volume. This approach involves identifying the most likely disposal scenario (typically landfills and surface impoundments) and selecting the DAF values based on the reported volume of waste.

2. Selection of Landfill or Surface Impoundment Disposal Scenario

The Agency will select the appropriate model and DAF value, for either landfills or surface impoundments, depending on the expected disposal scenario for the petitioned waste. The assessment of whether or not a petitioned waste is disposed in a landfill or surface impoundment will be determined on a case-by-case basis. The Agency will determine which type of model to use (landfill or surface impoundment) based on the disposal method, the waste composition (*e.g.*, percent solids), and current methods used to manage the waste.

3. Impact on Information Needed from Delisting Petitioners

The Agency does not anticipate that use of the EPACML for delisting decisions, as appropriate, will have a significant impact on the information needed for facilities submitting a delisting petition. As before, petitioners will be required to submit the information and data required by 40 CFR 260.20 and 260.22. Waste sampling procedures for the collection of input leachate data remain the same as those used for other fate and transport models and are not likely to impose any additional burden on the petitioner (see "Petitions to Delist Hazardous Wastes: A Guidance Manual", EPA publication EPA/530-SW-85-003; April 1985).

EPA solicits comments on all aspects of this model and its use in the context of this delisting petition, which is discussed in more detail below.

**II. Proposed Exclusion**

*A. Background*

1. Approach Used to Evaluate This Petition

This petition requests a delisting for a listed hazardous waste. In making the initial delisting determination, the Agency evaluated the petitioned waste against the listing criteria and factors cited in 40 CFR 261.11 (a)(2) and (a)(3). Based on this review, the Agency agrees with the petitioner that the waste is non-hazardous with respect to the original listing criteria. (If the Agency had found, based on this review, that the waste remained hazardous based on the factors for which the waste was originally listed, EPA would have proposed to deny the petition.) EPA then evaluated the waste with respect to other factors or criteria to assess whether there is a reasonable basis to believe that such additional factors could cause the waste to be hazardous. The Agency considered whether the waste is acutely toxic, and considered the toxicity of the constituents, the concentration of the constituents in the waste, their tendency to migrate and to bioaccumulate, their persistence in the environment once released from the

waste, plausible and specific types of management of the petitioned waste, and the quantities of waste generated.

For this delisting determination, the Agency identified plausible exposure routes for hazardous constituents present in the waste. The Agency is proposing the use of an organic leachate model in lieu of analytical results quantifying the mobility of hazardous organic constituents in the petitioned waste. The Agency also used the EPACML described in Section I of this notice to predict the concentration of hazardous constituents that may be released from the petitioned waste after disposal and to determine the potential impact of the unregulated disposal of Reynolds' petitioned waste on human health and the environment. Specifically, the EPACML was used to: (1) Predict compliance-point concentrations which were then compared directly to the levels of regulatory concern for particular hazardous constituents, and (2) calculate proposed maximum allowable leachable concentrations (*i.e.*, delisting levels) for the hazardous constituents of concern in the waste.

EPA believes that this fate and transport model represents a reasonable worst-case waste disposal scenario for the petitioned waste, and that a reasonable worst-case scenario is appropriate when evaluating whether a waste should be relieved of the protective management constraints of RCRA subtitle C. Because a delisted waste is no longer subject to hazardous waste control, the Agency is generally unable to predict and does not control how a waste will be managed after delisting. Therefore, EPA currently believes that it is inappropriate to consider extensive site-specific factors when applying the fate and transport model. For example, a generator may petition the Agency for delisting of a metal hydroxide sludge which is currently being managed in an on-site landfill and provide data on the nearest drinking water well, permeability of the aquifer, dispersivities, etc. If the Agency were to base its evaluation solely on these site-specific factors, the Agency might conclude that the waste, at that specific location, cannot affect the closest well, and the Agency might grant the petition. Upon promulgation of the exclusion, however, the generator is under no obligation to continue to manage the waste at the on-site landfill. In fact, it is likely that the generator will either choose to send the delisted waste off site immediately, or will eventually reach the capacity of the on-site facility and subsequently send the waste off site to a facility which may have very different hydrogeological and exposure conditions.

The Agency also considers the applicability of ground-water monitoring data during the evaluation of delisting petitions. During the development of its thermal treatment process using a rotary kiln, Reynolds disposed of the kiln residue in an on-site non-hazardous landfill at its Bauxite, Arkansas facility. In this case, the Agency determined that it would be inappropriate to request ground-water monitoring data from Reynolds' on-site landfill for several reasons. First, the waste disposed of in the on-site landfill was generated over a period of several years during the development of the thermal treatment process. Therefore, the landfill contains wastes treated using various process operating conditions and the wastes are not fully representative of the final treatment process or the petitioned waste. Second, the petitioned waste is not currently generated or disposed of in the on-site landfill. For these reasons, any ground-water monitoring data collected from the on-site landfill would not characterize the effects of the petitioned waste on the underlying aquifer at the eventual disposal site and thus would serve no purpose. Furthermore, the petitioned waste, presently classified as EPA Hazardous Waste No. K088, was not a listed hazardous waste in the State of Arkansas during the period that Reynolds disposed of the waste in its on-site landfill. Under 40 CFR 271.21(e)(2), States, such as Arkansas, with final authorization for their hazardous waste management programs must modify their programs to reflect Federal program changes within specified time frames. The deadline by which an authorized State had to modify its program to adopt the Federal listing of K088 was July 1, 1990 (provided no statutory change was needed). See 53 FR 35412, September 13, 1988. Because Reynolds did not place any of its thermally-treated K088 waste in the on-site landfill after June 30, 1990, and the landfill never received any other hazardous waste, the landfill is not subject to the ground-water monitoring requirements of 40 CFR part 264 or 265 or the equivalent authorized state requirements. Therefore, groundwater monitoring data is not available for the petitioned waste. EPA has proposed a rule clarifying the Agency's use of ground-water data in delisting decisions (see 54 FR 41930, October 12, 1989).

Reynolds petitioned the Agency for an upfront exclusion (for a waste that has not yet been generated) based on descriptions of a full-scale process used to treat spent potliners, characterization of untreated spent potliners, and results from the analysis of kiln residue generated at Reynolds' Bauxite, Arkansas facility during the treatment of spent potliners from four Reynolds aluminum reduction facilities. Specifically, Reynolds requested an upfront exclusion for kiln residue generated from the treatment of spent potliners received from the four Reynolds facilities and any other aluminum reduction facility. In addition, Reynolds plans to move its thermal treatment process from Bauxite, Arkansas to another Reynolds facility located in Gum Springs, Arkansas, and requested that the upfront exclusion apply to kiln residue generated at the new facility location. Moreover, Reynolds requested that the exclusion also apply to future waste generated by one additional rotary kiln, in order for Reynolds to expand its spent potliner treatment capacity. The second kiln would be established in conjunction with the first kiln, in Gum Springs, Arkansas, and similarly treat spent potliners.

Similar to other facilities seeking upfront exclusions, this upfront exclusion would be contingent upon Reynolds conducting analytical testing of representative samples of the petitioned waste once the treatment unit is on-line at the new facility location. Specifically, Reynolds will be required to collect representative samples from each of the rotary kilns once they are operational in Gum Springs, Arkansas, to verify that the rotary kilns are on-line and operating as described in the petition. The verification testing requires Reynolds to demonstrate that the rotary kilns, once on-line at its R.P. Patterson facility in Gum Springs, Arkansas can render spent potliners non-hazardous (*i.e.*, meeting the Agency's verification testing conditions).

From the evaluation of Reynolds' delisting petition, a list of constituents was developed for the verification testing conditions. Proposed maximum allowable leachable concentrations for these constituents then were derived by back calculating from the delisting health-based levels through the EPACML adapted for use in delisting (see Part I of this notice). These concentrations (*i.e.*, "delisting levels") are the proposed verification testing conditions of the exclusion.

The Agency encourages the use of upfront delisting petitions because they have the advantage of allowing the applicant to know what treatment levels for constituents will be sufficient to

render specific wastes non-hazardous, before investing in new or modified waste treatment systems. Therefore, upfront delistings will allow new facilities to receive exclusions prior to generating wastes, which, without upfront exclusions, would unnecessarily have been considered hazardous. Upfront delistings for existing facilities can be processed concurrently during construction or permitting activities; therefore, new or modified treatment systems should be capable of producing wastes that are considered non-hazardous sooner than otherwise would be possible. At the same time, conditional testing requirements to verify that the delisting levels are achieved by the fully operational treatment systems will maintain the integrity of the delisting program and will ensure that only non-hazardous wastes are removed from subtitle C control.

Finally, the Hazardous and Solid Waste Amendments of 1984 specifically require the Agency to provide notice and an opportunity for comment before granting or denying a final exclusion. Thus, a final decision will not be made until all public comments on today's proposal to exclude Reynolds' waste are addressed and the proposal to use the EPACML in this delisting decision is finalized.

*B. Disposition of Delisting Petition*

1. Reynolds Metals Company, Gum Springs, Arkansas

a. *Petition for Exclusion.* Reynolds Metals Company's (Reynolds) Hurricane Creek facility, located in Bauxite, Arkansas, is a closed bauxite mine and alumina refining processing plant. Reynolds petitioned the Agency to exclude kiln residue derived from processing spent potliners using its rotary kiln treatment process. The kiln residue is presently listed, in accordance with 40 CFR 261.3(c)(2)(i) (*i.e.*, the "derived from" rule), as EPA Hazardous Waste No. K088—"Spent potliners from primary aluminum reduction". The listed constituent of concern for K088 waste is cyanide (complexes) (see 40 CFR part 261, appendix VII). Reynolds plans to move its spent potliner treatment equipment from Bauxite, Arkansas to its R.P. Patterson facility located at Gum Springs, Arkansas, if a final exclusion for the treatment residue is granted.

Reynolds petitioned to exclude its kiln residue because it does not believe that the waste will meet the criteria of the listing. Reynolds also believes that its treatment process will generate a non-hazardous waste because the constituent of concern is present at low levels. Reynolds further believes that the waste will not be hazardous for any other reason (*i.e.*, there are no additional constituents or factors that could cause the waste to be hazardous). Review of this petition included consideration of the original listing criteria, as well as the additional factors required by the Hazardous and Solid Waste Amendments (HSWA) of 1984. See section 222 of HSWA, 42 U.S.C. 6921(f), and 40 CFR 260.22(d)(2)–(4). Today's proposal to grant this petition for delisting is the result of the Agency's evaluation of Reynolds' petition.

b. *Background.* On August 14, 1989, Reynolds petitioned the Agency to exclude its kiln residue generated from the treatment of spent potliner wastes by its rotary kiln process, and subsequently provided additional information to complete its petition. Specifically, Reynolds requested that the Agency grant an upfront exclusion (*i.e.*, an exclusion that applies to waste not presently generated) for kiln residue generated by the rotary kiln process at its future location in Gum Springs, Arkansas.

In support of its petition, Reynolds submitted (1) detailed descriptions of its waste treatment process; (2) a description of the processes generating spent potliners that were treated by the rotary kiln process; (3) total constituent analysis results for the eight EP metals listed in 40 CFR 261.24 (EPA recently adopted the Toxicity Characteristic Leaching Procedure (TCLP) in the Toxicity Characteristic (TC) rulemaking (55 *FR* 11798; March 29, 1990) as a replacement to the EP for the establishment of the TC regulatory levels and these eight metals are now referred to as the TC metals.); (4) total constituent analysis results for antimony, beryllium, nickel, cyanide, and fluoride from representative samples of both the kiln residue and the untreated spent potliners; (5) EP leachate analysis results for the eight metals listed in 40 CFR 261.24, antimony, beryllium, nickel, cyanide, and fluoride from representative samples of the kiln residue; (6) TCLP leachate analyses for the TC metals (except mercury), antimony, beryllium, nickel, cyanide, and fluoride from representative samples of the kiln residue; (7) total constituent analysis results for volatile and semi-volatile organic compounds, dioxins, and furans from representative samples of the kiln residue; and (8) test results and information regarding the hazardous waste characteristics of ignitability, corrosivity, and reactivity.

Similar to other facilities seeking upfront exclusions, once an operational rotary kiln is present at the new facility location in Gum Springs, Arkansas, Reynolds would be required to submit additional analytical data for the petitioned waste to verify that the rotary kiln, once on-line at the new location, meets the treatment capability of the Bauxite rotary kiln as described in the petition and the verification testing conditions specified in the exclusion (see section II.B.1.f.—Verification Testing Conditions).

Reynolds has developed a process to treat spent potliners that have been generated during the primary reduction of aluminum. In support of its delisting demonstration, Reynolds treated potliners generated at its four primary aluminum reduction plants in North America (located at Longview, Washington; Massena, New York; Troutdale, Oregon; and Baie Comeau, Quebec).

Approximately 23 facilities presently generate spent potliners in the United States at a rate of approximately 150,000 to 200,000 metric tons of spent potliner per year. (See "Summary of Generation, Disposal, and Treatment Practices for Spent Potliners from the Primary Reduction of Aluminum", March 12, 1990, in the RCRA public docket for this notice.) All primary aluminum produced in the United States is manufactured by the Hall-Heroult process. Aluminum is refined by dissolving alumina (aluminum oxide) in a molten cryolite ($Na_3AlF_6$) bath and then introducing a direct electric current to reduce the alumina to aluminum. The reduction takes place in carbon-lined, cast iron electrolytic cells or pots. These pots consist of a steel shell lined with refractory brick with an inner lining of carbon.

The cathode of the aluminum reduction cell is a carbon liner on which the pool of cryolite/molten aluminum rests. Alumina is added to the bath periodically to maintain the concentration of dissolved alumina within the desired range. The aluminum is withdrawn intermittently from the bottom of the molten bath. The molten aluminum is collected in ladles and then cast as the final product into ingots or pigs at a separate casthouse facility. In order to retain purity of the aluminum product and structural integrity of the cell, the molten aluminum must be kept isolated from the iron shell of the cell. Over the life of the cathode, the carbon lining materials become impregnated with the cryolite electrolytic solution. As the cryolite is absorbed into the cathode, the integrity of the lining can be reduced and cracks or heaving of the lining can occur. A service life of three

to seven years for a potliner is common. Upon failure of a liner, the cell is emptied and cooled. The steel shell is stripped of the carbon lining by mechanical drilling. This carbon lining, or spent potliner, is the subject of the K088 listing.

Reynolds originally constructed several Traylor rotary kilns at its Bauxite, Arkansas facility for the purpose of calcining alumina. The calcining of alumina is a process that was used as a final step in the refining of bauxite to alumina. Specifically, aluminum trihydroxide from the processing of bauxite was transformed to anhydrous alumina in a rotary kiln at approximately 1,450° F. The kilns no longer perform this function at the Bauxite facility. Reynolds used one of these kilns to treat spent potliner and generate data in support of its delisting petition.

In the rotary kiln treatment process, spent potliner is first crushed and milled to a ¾-inch particle size. Brown sand and limestone are also ground to ¾-inch particles. Brown sand is an alkaline mud generated in the two-stage process of extracting alumina from bauxite. In the past, Reynolds stored this waste on-site at the Bauxite facility and has built up a significant stockpile of this material. Reynolds mines the brown sand from the dry lake beds at their Hurricane Creek facility and crushes it for use in their treatment process. The crushed spent potliner, brown sand, and limestone can then be blended in varying ratios depending on the results of initial spent potliner characterization (i.e., the greater the cyanide and fluoride levels in the spent potliner, the more brown sand and limestone is added). In general, the spent potliner can contribute between 30 to 45 percent of the influent to the treatment process generating the petitioned waste. Reynolds adds the brown sand to help prevent the mixture being treated from agglomerating in the kiln. Limestone reacts with the soluble fluoride salts (sodium fluoride and cryolite) in spent potliner to form stable, relatively insoluble calcium fluoride, thereby reducing the leaching potential of fluorides in the kiln residue.

The rotary kiln at the Bauxite facility is approximately 250 feet in length and 9.5 feet in diameter and operates counter-currently. Natural gas is used to heat the kiln to the 1,200° F operating temperature at the burner end. The flue gas is sent through cyclones and an electrostatic precipitator (ESP) to remove solids. Reynolds plans to recycle the solids from the cyclones to the kiln, while solids generated from the ESP (which are not the subject of this petition) will be handled as hazardous waste. The kiln residue, the subject of the petition, is cooled by contact spraying with lake water and stored in waste piles. Reynolds plans to either dispose of the kiln residue at an on-site or off-site non-hazardous waste landfill, or send the waste to an off-site materials recovery facility, if the exclusion is granted.

To collect representative samples from a single waste treatment unit (*e.g.*, rotary kiln) like Reynolds', petitioners are normally requested to collect a minimum of four composite samples composed of independent grab samples collected over time (*e.g.*, grab samples collected every hour and composited by shift). See "Test Methods for Evaluating Solid Waste: Physical/Chemical Methods," U.S. EPA, Office of Solid Waste and Emergency Response, Publication SW-846 (third edition), November 1986, and "Petitions to Delist Hazardous Wastes—A Guidance Manual," U.S. EPA, Office of Solid Waste (EPA/530-SW-85-003), April 1985.

Reynolds petitioned for an upfront delisting for kiln residue generated from its rotary kiln treatment process which will treat spent potliners from various facilities. Therefore, Reynolds initiated a sampling program to characterize untreated spent potliners and treated kiln residue. Reynolds initially collected four composite samples of spent potliner generated from each of three Reynolds primary aluminum reduction facilities (*i.e.*, Massena, New York; Longview, Washington; and Baie Comeau, Quebec) for a total of 12 composite samples). Four composite samples of untreated material that had been crushed and milled were collected from one railroad car of spent potliner from each facility. Reynolds collected grab samples of the crushed spent potliner every five minutes following the milling process to form the composite samples. Reynolds claims that the railcars containing spent potliner from each primary aluminum production facility are representative of spent potliner likely to be generated at each facility. Each of the 12 composite samples of the untreated spent potliner was analyzed for total constituent concentrations (*i.e.*, mass of a particular constituent per mass of waste) of the TC metals, antimony, beryllium, nickel, cyanide, and fluoride; total constituent concentrations of volatile organic compounds; and total constituent concentrations of semivolatile organic compounds.

In order to characterize the variability of the untreated spent potliners, Reynolds also collected grab samples to be analyzed in addition to the composited samples. Reynolds collected 16 grab samples of untreated spent potliner from each of the three facilities. Each of these 48 grab samples of untreated waste was analyzed for total cyanide and total fluoride.

Reynolds treated the spent potliner from each facility in discrete runs. The test period for each facility consisted of four runs of material from each spent potliner source. During the runs, samples of the kiln residue were collected every 15 minutes and composited to form one composite per run. Each run consisted of approximately 3.5 to 4-hour processing time with a kiln residence time of approximately 90 minutes. Thus, four composite samples were obtained for each of the three spent potliner sources for a total of 12 composite samples. Each of the 12 composite samples of kiln residue were analyzed for total constituent concentrations and extraction procedure (EP) leachate concentrations (*i.e.*, mass of a particular constituent per unit volume of extract) of the TC metals, antimony, beryllium, nickel, cyanide, and fluoride; total constituent concentrations of volatile organic compounds; and total constituent concentrations of semi-volatile organic compounds.

In order to study the variability of the kiln residue, Reynolds took grab samples of kiln residue at fifteen minute intervals during one run from each facility. Each of the 44 grab samples was analyzed for levels of total and leachable cyanide and fluoride.

Reynolds in its initial demonstration collected and analyzed kiln residue generated from a treatment process using approximately 45 percent spent potliner, 30 percent brown sand, and 25 percent limestone by weight. An evaluation of the data submitted by Reynolds revealed that fluoride levels in the kiln residue varied significantly from run to run and in some cases exceeded the maximum allowable delisting level for fluoride established for Reynolds' petitioned waste. At the request of the Agency, Reynolds evaluated the results of the treatment of the spent potliner from the three facilities and then modified its treatment process to stabilize the fluoride more effectively in the waste. Reynolds modified its treatment process by increasing the ratio of brown sand and limestone to spent potliner. Subsequently, to treat spent potliner generated at its Troutdale, Oregon facility, Reynolds used an average ratio of 30 percent spent potliner, 35 percent brown sand, and 35 percent limestone. The spent potliner

from the Troutdale facility is considered by Reynolds to contain "worst-case" levels of hazardous constituents, principally cyanide and fluoride. The presence of contaminants in spent potliners varies depending on cell design and cell life. The Troutdale facility utilizes pots of older design which generate greater levels of cyanide and fluoride in the spent potliner. Reynolds collected four composite samples of spent potliner generated from the Troutdale facility. Reynolds sampled the spent potliner influent by collecting grab samples of the crushed, spent potliner every five minutes following the milling process to form the composite samples. During the run, samples of the kiln residue were collected every 15 minutes and composited to form one composite per run. Each run consisted of approximately 3.5 to 4-hour processing time with a kiln residence time of approximately 90 minutes. Thus, Reynolds collected a total of four composite samples of kiln residue generated from the treatment of spent potliner from Reynolds' Troutdale, Oregon facility.

Each of the four composite samples of the untreated spent potliner was analyzed for total constituent concentrations of the metals listed in 40 CFR 261.24, antimony, beryllium, nickel, cyanide, and fluoride; total constituent concentrations of volatile organic compounds; and total constituent concentrations of semi-volatile organic compounds.

Reynolds analyzed each of the four composite samples of kiln residue collected for the total constituent and EP leachate concentrations of the TC metals, antimony, beryllium, nickel, cyanide, and fluoride; TCLP leachate concentrations of the TC metals (except mercury), antimony, beryllium, nickel, cyanide, and fluoride; total constituent concentrations of volatile organic compounds; total constituent concentrations of semivolatile organic compounds; and total constituent concentrations of dioxins and furans.

Reynolds claims that analytical results generated from this sampling scheme provided data representative of the influent spent potliner, kiln residue, and variability of the thermal treatment process. The Agency believes that the material generated from the initial treatment process (*i.e.*, treatment using 45 percent spent potliner, 30 percent brown sand, and 25 percent limestone) is not fully representative of the waste generated from Reynolds' modified process. Thus, the Agency did not use the data provided by Reynolds using its initial treatment process in the evaluation of this petition. While these data were not used in the evaluation of the petition, the Agency notes that levels of all constituents except for several fluoride levels met delisting levels. A summary of the earlier data and the Agency's evaluation of that data is presented in the RCRA public docket for this notice. The Agency believes that the waste generated from the modified process is representative of the type of waste that will be generated by Reynolds. Since the initial Reynolds process was not completely successful in treating the spent potliner and the modified process appears to have been successful, the Agency is proposing to limit the exclusion to spent potliners treated using the modified Reynolds treatment process.

c. *Agency Analysis.* Reynolds used SW-846 Methods 6010 and 7041 through 7740 to quantify the total constituent concentrations of the TC metals, nickel, antimony, and beryllium in both the untreated spent potliners and kiln residue. Reynolds used Method 340.2 in "Methods for Chemical Analysis of Water and Wastes" to quantify the total constituent concentrations of fluoride in both the untreated spent potliners and kiln residue. Reynolds used SW-846 Method 9010 to quantify the total constituent concentrations of cyanide in the spent potliners and kiln residue. Reynolds used SW-846 Method 1310 (standard EP) to quantify the leachable concentrations of the TC metals, antimony, beryllium, nickel, cyanide, and fluoride in the kiln residue. Reynolds used the TCLP (SW-846 Method 1311 as described in 40 CFR Part 261, Appendix II) to quantify the leachable concentrations of the TC metals (except mercury), antimony, beryllium, nickel, cyanide, and fluoride in the kiln residue.

Table 2 presents the maximum total constituent concentrations of the TC metals, antimony, beryllium, nickel, cyanide, and fluoride for the untreated spent potliners and kiln residue from the Troutdale facility. Table 3 presents the maximum EP and TCLP leachate concentrations of the TC metals, antimony, beryllium, nickel, cyanide, and fluoride in the kiln residue from the treatment of this spent potliner.

Detection limits in Tables 2 and 3 represent the lowest concentration quantifiable by Reynolds, when using the appropriate SW-846 analytical method to analyze its waste. (Detection limits may vary according to the waste and waste matrix being analyzed, *i.e.*, the "cleanliness" of waste matrices varies and "dirty" waste matrices may cause interferences, thus raising the detection limits.)

TABLE 2.—MAXIMUM TOTAL CONSTITUENT CONCENTRATIONS (PPM) [1] UNTREATED SPENT POTLINER AND KILN RESIDUE

| Constituents | Untreated spent potliner | Kiln residue |
|---|---|---|
| Antimony | <3.3 | 16.0 |
| Arsenic | <40.0 | <40.0 |
| Barium | 180.0 | 110.0 |
| Beryllium | 19.0 | 7.2 |
| Cadmium | 0.44 | 1.9 |
| Chromium | 26.0 | 66.0 |
| Lead | 26.0 | 13.0 |
| Mercury | <0.1 | <0.1 |
| Nickel | 51.0 | 35.0 |
| Selenium | <2.0 | <2.0 |
| Silver | 0.99 | 4.4 |
| Cyanide | 5,800.0 | 16.0 |
| Fluoride | 113,000.0 | 35,000.0 |

< Denotes that the constituent was not detected at the detection limit specified in the table.

[1] These levels represent the highest concentrations of the constituents found in Troutdale samples of untreated spent potliner and kiln residue collected by Reynolds. The maximum level of a specific constituent in the untreated spent potliner does not necessarily correspond to the maximum level of the constituent in the kiln residue. In addition, these levels do not necessarily represent the specific levels found in one sample.

Using SW-846 Method 9070, Reynolds determined that its kiln residue had a maximum oil and grease content of 0.0133 percent; therefore, the EP analyses did not have to be modified in accordance with the Oily Waste EP methodology (*i.e.*, wastes having more than one percent total oil and grease may either have significant concentrations of constituents of concern in the oil phase, which may not be assessed using the standard EP leachate procedure, or the concentration of oil and grease may be sufficient to coat the solid phase of the sample and interfere with the leaching of metals from the sample). See SW-846 Method 1330.

TABLE 3.—MAXIMUM EP AND TCLP LEACHATE CONCENTRATIONS (PPM) TROUTDALE KILN RESIDUE [1]

| Constituents | TCLP leachate analyses | EP leachate analyses |
|---|---|---|
| Antimony | <0.007 | <0.20 |
| Arsenic | 0.018 | 0.031 |
| Barium | 0.68 | 0.44 |
| Beryllium | <0.008 | 0.0091 |
| Cadmium | <0.02 | 0.0066 |
| Chromium | <0.01 | <0.010 |
| Lead | 0.0091 | 0.017 |
| Mercury | [2] NA | <0.0002 |
| Nickel | 0.042 | <0.02 |
| Selenium | <0.002 | 0.0061 |
| Silver | 0.046 | 0.012 |
| Cyanide [3] | 0.014 | 0.25 |
| Fluoride | 29.0 | 22.0 |

< Denotes that the constituent was not detected at the detection limit specified in the table.

[1] These levels represent the highest concentrations of the constituents found in the Troutdale kiln residue samples collected by Reynolds. These levels do not necessarily represent the specific levels found in one sample.
[2] Not analyzed.
[3] Extraction done with distilled water instead of acetate buffer.

Reynolds used SW-846 Method 9010 and 9030, following acidification, to quantify the levels of reactive cyanide and sulfide, respectively, in the kiln residue. The maximum reported levels of reactive sulfide and reactive cyanide in the waste were 53 ppm and <0.25 ppm, respectively. Reynolds provided information, pursuant to 40 CFR 260.22, indicating that the kiln residue is not expected to demonstrate the characteristics of ignitability or corrosivity. See 40 CFR 261.21 and 261.22, respectively.

Reynolds used SW-846 Method 8240 to quantify the total constituent concentrations of volatile organic compounds in the untreated spent potliner and kiln residue. Reynolds used SW-846 Method 8270 to quantify the total constituent concentrations of semi-volatile organic compounds in the untreated spent potliner and kiln residue, following extraction by SW-846 Method 3540. Reynolds used SW-846 Method 8290 to quantify the total constituent concentrations of dioxins and furans in the kiln residue. A list of the compounds analyzed by sample, and corresponding detection limits, may be found in the RCRA public docket for this notice. Table 4 presents the maximum reported concentrations for hazardous organic constituents detected in the Troutdale untreated spent potliner and in the kiln residue. As in Table 2, the detection limits in this table represent the lowest concentrations quantifiable by Reynolds.

TABLE 4.—MAXIMUM TOTAL CONSTITUENT CONCENTRATIONS (PPM) [1] OF ORGANIC COMPOUNDS IN UNTREATED SPENT POTLINER AND KILN RESIDUE

| Constituents | Untreated spent potliner | Kiln residue |
|---|---|---|
| Acenaphthene | 15.0 | <1.0 |
| Benz(a)anthracene | 40.0 | <1.0 |
| Benzo(a)pyrene | 53.0 | <1.0 |
| Benzo(b)fluoranthene | 10.0 | <1.0 |
| Benzo(k)fluoranthene | 110.0 | <1.0 |
| Benzo(g,h,i)perylene | 27.0 | <1.0 |
| Bis(2-ethylhexyl)phthalate | 108.0 | <1.0 |
| Chrysene | 49.0 | <1.0 |
| Fluoranthene | 52.0 | <1.0 |
| Indeno(1,2,3-c,d)pyrene | 26.0 | <1.0 |
| Phenanthrene | 28.0 | <1.0 |
| Pyrene | 39.0 | <1.0 |
| 2,3,7,8-Tetrachlorodibenzo-p-furan | [2] NA | $4\times10^{-6}$ |

< Denotes that the constituent was not detected at the detection limit specified in the table.

[1] These levels represent the highest concentrations of the constituents found in Troutdale samples of untreated spent potliner and kiln residue collected by Reynolds. The maximum level of a specific constituent in the untreated spent potliner does not necessarily correspond to the maximum level of the constituent in the kiln residue. In addition, these levels do not necessarily represent the specific levels found in one sample.
[2] Not analyzed.

Reynolds submitted a signed certification stating that, based on projected annual waste generation, the maximum annual generation rate of kiln residue from the treatment of spent potliner produced by the four Reynolds primary aluminum reduction facilities will be approximately 50,000 tons per year. The Agency reviews a petitioner's estimates and, on occasion, has requested a petitioner to re-evaluate estimated waste volume. EPA accepts Reynolds' certified maximum estimate of 50,000 tons (approximately 50,000 cubic yards) per year for the four Reynolds sites. If Reynolds uses two kilns as proposed in their petition and treats wastes generated by other aluminum producers, then Reynolds calculates that its maximum annual treatment capacity would be 378,000 tons of kiln residue. This calculation is based on operation of the two treatment kilns with a maximum feed rate of 24 tons per hour, operation 24 hours per day, 365 days per year with approximately 10 percent kiln maintenance downtime per year. The Agency believes that the estimate of 378,000 tons of kiln residue generated per year is based on assumptions that reflect absolute maximum throughput of the kiln and may not reflect potential operational problems that are normally associated with operating a kiln of this size. Operational problems may preclude the kilns from being operated at their maximum capacity at all times. Therefore, the Agency felt that a more reasonable maximum annual volume of waste generated by the Reynolds process should be calculated. Reynolds provided a probable range of the influent materials of between 20 and 24 tons per hour. Reynolds' demonstration during the Troutdale test run used a feed rate of between 21.2 and 21.5 tons per hour. Therefore, the Agency based its calculation on operation of two kilns with a feed rate of 20 tons per hour, operation 24 hours per day, operation 365 days per year with 15 percent kiln downtime. This results in a calculated maximum annual volume of approximately 300,000 tons per year. Therefore, the Agency has chosen to cap the volume generated at 150,000 tons per year per kiln as a more realistic maximum annual generation rate.

EPA does not generally verify submitted test data before proposing delisting decisions, and has not verified the data upon which it proposes to grant Reynolds' exclusion. The sworn affidavit submitted with this petition binds the petitioner to present truthful and accurate results. The Agency, however, has initiated a spot-check sampling and analysis program to verify the representative nature of the data for some percentage of the submitted petitions. A spot-check visit to a selected facility may be initiated before finalizing a delisting petition or after granting an exclusion.

d. *Agency Evaluation.* The Agency considered the appropriateness of alternative waste management scenarios for Reynolds' kiln residue and decided that disposal in a landfill is the most reasonable, worst-case disposal scenario for this waste. Under this disposal scenario, the major exposure route of concern for any hazardous constituents would be ingestion of contaminated ground water. The Agency, therefore, evaluated the petitioned waste using the modified EPA's Composite Model for Landfills (EPACML). See Section I of this notice and the RCRA public docket for this notice for a detailed description of the EPACML and the modifications made for delisting.

In addition, the Agency used its Organic Leachate Model (OLM) to estimate the leachable portion of the organic constituents in the petitioned waste. See 50 FR 48953 (November 27, 1985), 51 FR 41084 (November 13, 1986), and the RCRA public docket for these notices for a detailed description of the OLM and its parameters. The results of the OLM analysis were used in conjunction with the EPACML model to estimate the potential impact of organic constituents on the underlying aquifer. The Agency requests comments on the use of the EPACML and the OLM as applied to the evaluation of the petitioned waste.

Specifically, the Agency used the EPACML to evaluate the mobility of the hazardous inorganic constituents detected in the EP and TCLP extract of Reynolds' kiln residue. The Agency's evaluation, using an estimate of 300,000 cubic yards per year and the maximum reported leachate concentrations (the maximum concentrations, whether EP or TCLP, were used, see Table 3), yielded the compliance-point concentrations shown in Table 5.

TABLE 5.—EPACML: COMPLIANCE-POINT CONCENTRATIONS (PPM) TROUTDALE KILN RESIDUE

| Constituents | Compliance-point concentrations | Levels of regulatory concern [1] |
|---|---|---|
| Arsenic | 0.0026 | 0.05 |
| Barium | 0.057 | 1.0 |
| Beryllium | 0.00076 | 0.001 |
| Cadmium | 0.00055 | 0.005 |
| Lead | 0.0014 | 0.015 |
| Nickel | 0.0035 | 0.1 |
| Selenium | 0.00051 | 0.05 |
| Silver | 0.0038 | 0.05 |
| Cyanide | 0.021 | 0.2 |
| Fluoride | 2.42 | 4.0 |

[1] See "Docket Report on Health-based Levels and Solubilities Used in the Evaluation of Delisting Petitions," May 1991, located in the RCRA public docket for today's notice.

The Agency did not evaluate the mobility of the remaining inorganic constituents (*i.e.*, antimony, chromium, and mercury) from Reynolds' waste because they were not detected in the EP and TCLP extracts using the appropriate SW-846 analytical test methods (see Table 3). The Agency believes that it is inappropriate to evaluate non-detectable concentrations of a constituent of concern in its modeling efforts if the nondetectable value was obtained using the appropriate analytical method. Specifically, if a constituent cannot be detected (when using the appropriate analytical method with an adequate detection limit), the Agency assumes that the constituent is not present and therefore does not present a threat to either human health or the environment.

The kiln residue exhibited arsenic, barium, beryllium, cadmium, lead, nickel, selenium, silver, cyanide, and fluoride levels at the compliance point below the health-based levels used in delisting decision-making. Additionally, the maximum reported levels of reactive sulfide and cyanide in the waste (i.e., 53 ppm and <0.25 ppm, respectively) are below the Agency's interim standards of 500 and 250 ppm, respectively. See "Interim Agency Thresholds for Toxic Gas Generation," July 12, 1985, Internal Agency Memorandum in the RCRA public docket.

The Agency also evaluated the mobility of the hazardous organic constituent detected in Reynolds' waste using the OLM and EPACML. The only organic constituent detected was 2,3,7,8-tetrachlorodibenzofuran (2,3,7,8-TCDF) at 4 parts per trillion (ppt) in one sample. The Agency believes that this reported quantification level may be somewhat suspect because (1) the level detected is very close to the detection limit (1 ppt), and (2) no other chlorinated dioxins or furans were detected. Typically these dioxins and furans occur as mixtures of varying chlorine content and 2,3,7,8 isomers are a small fraction of the total dioxin/furan content. In any case, the Agency evaluated the detected concentration of 2,3,7,8-TCDF by applying the applicable 2,3,7,8-tetrachlorodibenzo-p-dioxin (2,3,7,8-TCDD) toxicity equivalent factor (0.1 for 2,3,7,8-TCDF) and evaluating the mobility of the resultant equivalent (0.4 ppt) using the OLM. A TCDD equivalent is calculated by multiplying all detected concentrations of tetra-, penta-, and hexa-chlorinated dioxins and furans by weighting factors and summing them to estimate a 2,3,7,8-TCDD equivalent concentration. The calculation of TCDD toxicity equivalents, equivalent factors, and their derivation are described in "1989 Update to the Interim Procedures for Estimating Risk Associated with Exposures to Mixtures of Chlorinated Dibenzo-p-Dioxins and Dibenzofurans" U.S. EPA, Risk Assessment Forum, March 1989.

The resulting leachable concentration was used as an input into the EPACML in order to assess the potential impact of the constituent upon the ground water. The calculated compliancepoint concentration for this constituent (0.0001 ppt) would be below the level of regulatory concern (0.05 ppt; see 55 FR 30370, July 25, 1990).

The Agency does not believe that verification testing for dioxin and furans is necessary because (1) the Agency believes that the influent to the kiln is unlikely to contain dioxin precursors (2) the one detected occurrence of 2,3,7,8-TCDF may have been an analytical anomaly, and (3) the level apparently detected would pass the delisting evaluation.

The Agency did not evaluate the mobility of the remaining hazardous organic constituents from Reynolds kiln residue because they were not detected in the kiln residue using appropriate analytical methods. As stated previously, the Agency will not evaluate non-detectable concentrations of a constituent of concern in its modeling efforts if the non-detectable value was obtained using the appropriate analytical method.

During its evaluation of Reynolds' petition, the Agency considered the potential impact of the petitioned waste via nonground water routes, specifically, with regard to airborne and waterborne dispersal of waste contaminants. The Agency believes that direct contact from airborne exposure to hazardous contaminants from Reynolds' waste is unlikely due to the physical and chemical nature of the petitioned waste (*i.e.*, Reynolds' waste "sets up" as a result of the lime content following its removal from the kiln and exposure to weathering). However, due to the significant volume of waste that Reynolds' estimates it will generate, the Agency evaluated the potential hazards resulting from airborne exposure to waste contaminants from the petitioned waste. In this evaluation, the Agency assumed that the petitioned kiln residue, under some conditions, could be ground to form loose particles. The results of this conservative, worst-case evaluation indicated that there is no substantial potential hazard to human health from airborne exposure to constituents from Reynolds' waste. A complete description of the Agency's assessment of the potential impact of Reynolds' waste, with regard to airborne dispersal of waste contaminants, is presented in the docket for today's proposed rule.

With regard to waterborne dispersal of waste contaminants, the Agency believes that it may be possible for runoff (*i.e.*, rainwater, leachate, or other liquid) to transport contaminants from a waste disposal area to a nearby surface water body. As described in today's proposal, the Agency believes that landfill disposal is a reasonable worst-case management scenario for Reynolds' petitioned waste. While contamination of surface water might occur through runoff from the waste disposal area including both contaminants leached from the waste as well as suspended particulate matter, the Agency believes that the concentrations of any hazardous constituents in this runoff will tend to be lower than the extraction procedure test results reported in today's proposal due to the aggressive acidic medium used for extraction. In addition, the Agency believes that any transported contaminants would be further diluted in the receiving surface water body. Finally, the Agency believes that, in general, leachate derived from the waste will not directly enter a surface water body without first traveling through the saturated (subsurface) zone where dilution of hazardous constituents may occur; the EPACML accounts for the presence of this saturated zone. As a result, the Agency does not believe Reynolds' treated wastes will pose a threat to human health or the environment through the waterborne dispersal of waste constituents.

The Agency concluded, after reviewing Reynolds' processes and raw materials list, that no other hazardous constituents, other than those tested for, are likely to enter into the thermal

treatment process or be generated by the process, and that no other constituents of concern are likely to be present in Reynolds' waste.

In addition, based on test results and information provided by Reynolds, pursuant to 40 CFR 260.22, the Agency concludes that the kiln residue will not exhibit any of the characteristics of ignitability, corrosivity, or reactivity. See 40 CFR 261.21, 261.22, and 261.23, respectively.

e. *Conclusion.* The Agency believes that the descriptions of Reynolds' thermal treatment process and analytical characterizations, in conjunction with the proposed delisting testing requirements, provide a reasonable basis to grant Reynolds' petition for an upfront conditional exclusion. The Agency also believes that Reynolds' sampling plan adequately represents the variations in raw materials and processing. Furthermore, the Agency concludes that the data submitted in support of the petition show that Reynolds' process can render spent potliners non-hazardous. The Agency believes that, in general, Reynolds can treat spent potliner to reduce fluoride to levels below delisting levels of concern. Specifically, using a kiln influent consisting of 30 percent by weight spent potliner, with approximately equal parts of brown sand and limestone by weight, the fluoride in the spent potliner is expected to be effectively immobilized. To address the potential concerns regarding fluoride, the Agency is proposing to limit the exclusion to kiln residue generated from influent composed of no more than 35 percent spent potliner with approximately equal parts of brown sand and limestone by weight. That is, the maximum ratio of spent potliner cannot exceed the demonstrated effective treatment ratio (30 percent) by more than 5 percent. This will allow Reynolds some flexibility in tailoring its process to the treatment of a particular spent potliner but will be similar to the process demonstrated by Reynolds to be effective in treating the spent potliner. In addition, under the continuous testing provisions of a conditional exclusion, Reynolds will be required to retreat or dispose as hazardous any batch exhibiting fluoride extract levels above a specified level (*i.e.*, "delisting level") (see section II.B.1.f.—Verification Testing Conditions.)

However, the Agency is concerned that the concentrations of the constituents of concern in the kiln residue may vary somewhat depending on the quality of spent potliners generated at various facilities. Therefore, the Agency is proposing to require initial and subsequent testing of the petitioned kiln residue, prior to disposal, to ensure that the rotary kiln effectively handles the potential variation in constituent concentrations (see section II.B.1.f.—Verification Testing Conditions).

The Agency proposes to grant a conditional exclusion to Reynolds Metals Company, located in Gum Springs, Arkansas, for the kiln residue described in its petition as EPA Hazardous Waste No. K088. The Agency's decision to exclude this waste is based on process descriptions, characterization of untreated spent potliner waste, and results from the analysis of kiln residue generated by the rotary kiln located at its Bauxite, Arkansas facility. This exclusion does not apply to electrostatic precipitator (ESP) dust generated by the rotary kiln. If the proposed rule becomes effective, the petitioned kiln residue, provided the conditions of the exclusion are met, will no longer be subject to regulation under 40 CFR parts 262 through 268 and the permitting standards of 40 CFR part 270.

Reynolds requested that the exclusion be applicable to a future kiln facility to be established in Gum Springs, Arkansas. Reynolds plans to move its kiln, presently located in Bauxite, Arkansas, to Gum Springs, if the exclusion is granted. Reynolds plans to construct and operate the new facility in the same manner as the Bauxite facility and to close the Bauxite facility. The Agency is proposing conditional testing requirements for Reynolds' new rotary kiln facility location. Because the same rotary kiln treatment process and influent ratio (*i.e.*, ratio of spent potliner, limestone, and brown sand) will be used, the generated waste is expected to be similar to the kiln residue generated at the Bauxite, Arkansas facility.

As part of its petition, Reynolds requested that the exclusion be applied to all possible spent potliner sources in addition to their own facilities identified in Reynolds' petition (*i.e.*, Massena, New York; Longview, Washington; Troutdale, Oregon; and Baie Comeau, Quebec). The Agency believes that the Reynolds treatment process has the potential to effectively treat a variety of spent potliner material from other aluminum producers. However, total constituent concentrations of certain compounds (*e.g.*, cyanide and fluoride) in untreated spent potliners generated at other facilities can be somewhat higher than those reported as detected in Reynolds' spent potliner. (See "Summary of Generation, Disposal, and Treatment Practices for Spent Potliners from the Primary Reduction of Aluminum," March 12, 1990, in the RCRA public docket for this notice.) Therefore, the Agency is proposing to exclude the kiln residue from the treatment of spent potliners from other generators only if Reynolds can demonstrate, through extensive verification testing, that the new waste (*i.e.*, spent potliners from other sources) can be effectively treated. This condition is described in more detail below.

As part of its petition, Reynolds also requested that the exclusion be applied to kiln residue generated from one additional rotary kiln which Reynolds plans to establish at the same location in Gum Springs. Reynolds proposed to establish this additional kiln in order to have the capacity to treat spent potliners generated from primary aluminum facilities other than the Reynolds facilities. This exclusion will not initially include kiln residue generated from spent potliner produced by facilities other than Reynolds' four facilities. However, Reynolds may add an additional kiln if it can demonstrate that spent potliners from other generators can be successfully treated. Therefore, the Agency may grant Reynolds' request for the scope of the exclusion to cover one additional rotary kiln (without further notice and comment) if Reynolds can demonstrate that the new kiln can meet the verification testing conditions specified. However, the proposed conditional exclusion initially covers only one kiln.

f. *Verification Testing Conditions.* As stated earlier, the proposed exclusion contains verification testing requirements. These testing requirements are to be conducted in two phases, initial and subsequent. The initial testing requirements apply to the first 20 days that the rotary kiln, once established at the new facility location in Gum Springs, Arkansas, is operated as an on-line, full-scale unit at typical operating conditions (*i.e.*, similar to those residence times, temperatures described in the petition, using no more than 35 percent spent potliner by weight and approximately equal percentages of brown sand and limestone, and other conditions specified in the initial verification testing requirements). The subsequent testing requirements for the rotary kiln apply to the period of time following the initial 20-day period.

If the final exclusion is granted as proposed, Reynolds will be required to: (1) Submit information on the operating parameters of the newly located rotary kiln, (2) collect and analyze daily composite samples (over a 20-day

period) to verify that the new facility, once on-line, meets the treatment capability of the rotary kiln described in the petition, and (3) continue to collect and analyze daily and weekly samples of the petitioned waste to verify that the kiln residue continues to meet the Agency's verification testing limitations (*i.e.*, "delisting levels"). These proposed conditions are specific to the upfront exclusion petitioned for by Reynolds. The Agency may choose to modify these proposed conditions based on comments that may be received during the public comment period for this proposed rule. The proposed exclusion for Reynolds' rotary kiln in Gum Springs, Arkansas is conditional upon the following requirements:

(1) *Operating Conditions:*

(A) *Initial Verification Testing:* During the first 20 days of full-scale operation of the rotary kiln, at typical operating conditions, Reynolds must monitor and submit to EPA the rotary kiln operating conditions (including, but not limited to: temperature range of the kiln (hot and cold end), kiln residue exit temperature, spent potliner feed rate, brown sand feed rate, limestone feed rate, natural gas feed rate, oxygen/air feed rate, and rotary kiln residence time of the raw materials). The ratio of the spent potliner feed rate to the combined feed rates of the spent potliner, brown sand, and limestone must be no more than 0.35. Information on all other operating conditions should encompass all conditions used for preliminary testing runs and those anticipated for subsequent waste processing. During initial verification testing, the petitioner must also demonstrate to EPA how the range of operating conditions could affect the process (*i.e.*, submit analyses of representative grab samples, as specified under Condition (2), of the kiln residue generated under the expected range of operating conditions). The source of the brown sand must be from Reynolds' dry lake beds at the Bauxite, Arkansas facility. Reynolds must submit the information specified in this condition and obtained during this initial period no later than 90 days after the treatment of the first full-scale batch of spent potliner.

(B) *Subsequent Verification Testing:* During subsequent verification testing, Reynolds must monitor the performance of the rotary kiln at all times to ensure that it falls within the range of operating conditions demonstrated, during initial verification testing, to be adequate to maintain the levels of hazardous constituents below the delisting levels specified in Condition (4). The feed rates of spent potliner, lime and brown sand are to be as that described in Condition (1)(A). Records of the operating conditions of the rotary kiln (including, but not limited to: temperature range of the kiln, kiln residue exit temperature, spent potliner feed rate, brown sand feed rate, limestone feed rate, natural gas feed rate, oxygen/air feed rate, and rotary kiln residence time of the raw materials) should be maintained on site for a minimum of five years. This information must be furnished upon request and made available for inspection by any employee or representative of EPA or the State of Arkansas.

The purpose of this condition is to ensure efficient treatment of the spent potliners. The Agency is proposing limitations on the spent potliner feed ratio because analytical data revealed that the spent potliner was effectively treated using a feed rate of approximately 30 percent spent potliner. Treatment of the spent potliner was not demonstrated to be completely effective using a feed rate of 45 percent spent potliner. The Agency, however, would like to allow Reynolds some flexibility in optimizing their process. Since the kiln residue generated by the Reynolds process is subject to verification testing, the Agency is proposing to limit Reynolds to using up to 35 percent spent potliner by weight, and approximately equal amounts by weight of brown sand and limestone.

(2) *Testing:* Sample collection and analyses (including quality control (QC) procedures) must be performed according to SW-846 methodologies. For fluoride, samples must be analyzed using Method 340.2 from "Methods for Chemical Analysis of Water and Waste". If the EPA judges the treatment process to be effective under the operating conditions used during the initial verification testing, Reynolds may replace the testing required in Condition (2)(A) with the testing required in Condition (2)(B). Reynolds must continue to test daily composites of kiln residue generated beyond the time period specified in Condition (2)(A) until and unless notified by EPA in writing that testing in Condition (2)(A) may be replaced by Condition (2)(B) (to the extent directed by EPA).

(A) *Initial Verification Testing:* During the first 20 operating days of full-scale operation of the new on-line rotary kiln, Reynolds must collect and analyze daily composites of kiln residue. Daily composites must be composed of representative grab samples collected every 6 hours during each 24-hour kiln operating cycle. The kiln residue samples must be analyzed, prior to the disposal of the kiln residue, for all constituents listed in Condition (4). Reynolds must report the analytical test data, including quality control information, obtained during this initial period no later than 90 days after the treatment of the first full-scale batch of untreated spent potliner.

The Agency has determined, through its review of similar petitions, that approximately four weeks are required for a facility to train operators and to collect sufficient data to verify that a full-scale treatment process is operating correctly. Because Reynolds has already generated data from the full-scale process, the Agency believes that approximately three weeks or 20 operating days are sufficient in this case. The initial verification testing conditions, if promulgated as proposed, will require daily composite samples of kiln residue to be collected during the first 20 operating days of full-scale operation of the rotary kiln at the new facility location in Gum Springs, Arkansas. The Agency proposes this initial verification testing condition both to gather data obtained from the rotary kiln and to ensure that the rotary kiln is closely monitored during the start-up period. If the Agency determines that the data collected under this condition reveal that the rotary kiln is not being operated as described in Reynolds' petition, the exclusion will not cover the generated kiln residue. If the Agency determines that the data from the initial verification period demonstrates the treatment process is effective, EPA will notify Reynolds in writing that the testing conditions in 2(A) may be replaced with the testing conditions in 2(B).

As stated in section II.B.1.e., the Agency believes that the concentrations of the constituents of concern in the kiln residue can vary over time depending on the source and quality of spent potliner treated by the kiln. As a result, in order to ensure that Reynolds' treatment process effectively handles the likely variation in constituent concentrations in spent potliner, the Agency is proposing a subsequent verification testing condition. The proposed subsequent testing is expected to verify and demonstrate that the kiln is operated in a manner similar to its operation during the initial verification testing and that the kiln residue does not exhibit unacceptable levels of toxic constituents even though the composition of the feedstock (*e.g.*, spent potliner) may change somewhat over time. Therefore, the Agency is proposing to require the Reynolds to analyze daily and weekly composites of the kiln residue as described in Condition (2)(B).

(B) *Subsequent Verification Testing:* Following notification by EPA, Reynolds may substitute the testing conditions in (2)(B) for (2)(A). Reynolds must collect and analyze both daily and weekly composites of kiln residue. Daily composites must be composed of representative grab samples collected every 6 hours during a 24-hour kiln operating cycle and these samples must be analyzed, prior to the disposal of the kiln residue. for leachable concentrations of cyanide and fluoride. Weekly composites must be composed of representative grab samples collected every 6 hours during a 24-hour kiln operating cycle for each day in the week that the kiln is operating. The weekly samples must be analyzed, prior to the disposal of the kiln residue, for the leachable concentrations of the inorganics listed in Condition (4)(A) and leachable levels of the semi-volatile organic compounds listed in Condition (4)(B). Analyses of both daily and weekly samples

must be completed prior to the disposal of waste generated during that week as set forth in Condition (3). The analytical data, including quality control information, must be compiled, summarized, and maintained on site for a minimum of five years. These data must be furnished upon request and made available for inspection by any employee or representative of EPA or the State of Arkansas.

The Agency believes that collecting daily and weekly composite samples will ensure that Reynolds' treatment process is able to handle the potential variability in concentrations of those constituents of most concern. However, the Agency is seeking comments as to whether the daily testing for leachable concentrations of cyanide and fluoride required in Condition (2)(B) is necessary or if weekly testing for these parameters (similar to the testing requirement for the other constituents in Condition (4)) would be sufficient. In addition, the Agency is seeking comments on whether it would be appropriate to reduce the required testing frequency once Reynolds has established a significant database on constituent concentrations in the kiln residue.

Future delisting proposals and decisions issued by the Agency may include different testing and reporting requirements based on an evaluation of the manufacturing and treatment processes, the waste, the volume of waste (including whether there is a fixed volume of waste or an infinite source), and other factors normally considered in the petition review process. For example, wastes with variable constituent concentrations, discussed in previous delisting decisions (see *e.g.*, 51 FR 41323, November 14, 1986), may require continuous batch testing.

(3) *Waste Holding and Handling:* Reynolds must store, as hazardous, all kiln residue generated until verification testing (as specified in Condition (2)(A) and (2)(B)) is completed and compared, by the petitioner, with the delisting levels set forth in Condition (4). If the levels of hazardous constituents measured in the samples of kiln residue generated do not exceed any of the levels set forth in Condition (4), then the kiln residue is non-hazardous and may be managed and disposed of in accordance with all applicable solid waste regulations. If hazardous constituent levels in any daily or weekly sample exceed any of the delisting levels set in Condition (4), the kiln residue generated during the time period corresponding to this sample must be retreated until it meets these levels (analyses must be repeated) or managed and disposed of in accordance with Subtitle C of RCRA. Kiln residue which is generated but for which the required analysis is not complete or valid must be managed and disposed of in accordance with Subtitle C of RCRA, until valid analysis demonstrates that Condition (4) is satisfied.

The purpose of this condition is to ensure that kiln residue which contains hazardous levels of specific inorganic or organic constituents is managed and disposed of in accordance with subtitle C of RCRA. Holding the kiln residue until characterization is complete will protect against improper handling of hazardous material. Both the daily composite sample and its corresponding weekly composite sample must be analyzed for the appropriate parameters, and must meet the appropriate delisting levels, in order for the waste to be considered non-hazardous.

(4) *Delisting Levels:* All concentrations must be measured in the waste leachate by the method specified in 40 CFR 261.24.

(A) The leachable concentrations for inorganics may not exceed the following levels (ppm): arsenic, selenium, or silver—0.60; barium—12.0; antimony—0.12; cadmium—0.06; lead—0.18; chromium or nickel—1.2; mercury—0.024; beryllium—0.012; fluoride—48.0; and cyanide—2.4 (cyanide extraction must be conducted using deionized water).

(B) The leachable constituent concentrations for organics may not exceed the levels listed below (ppm):

| | |
|---|---|
| Acenapthene | 24 |
| Benz(a)anthracene | $1.2\times10^{-4}$ |
| Benzo(b)fluoranthene | $2.4\times10^{-4}$ |
| Benzo(a)pyrene | $2.4\times10^{-3}$ |
| Chrysene | $2.4\times10^{-3}$ |
| Fluoranthene | 12 |
| Indeno(1,2,3-cd)pyrene | $2.4\times10^{-3}$ |
| Pyrene | 12 |

The Agency established the delisting levels for Condition (4) by back-calculating from the health-based levels for the constituents of concern using the DAF of 12 derived from the EPACML. These delisting levels correspond to the allowable levels measured in the TCLP leachate of the waste. The Agency did not use the OLM to calculate delisting levels for these consituents in the kiln residue itself, because the Agency believes that the TCLP leachate values provide a more direct indication of leachable levels for the kiln residue.

The Agency selected the set of organic constituents specified in Condition (4)(B) after reviewing information about the composition of spent potliners, descriptions of Reynolds' treatment process, and the health-based levels used in delisting decision-making. Most of the these constituents (*i.e.*, PAHs) are also products of incomplete combustion. Condition (4)(B) as listed above provides the list of organic constituents for which Reynolds must test the leachate from the kiln residue, as well as the levels at which (or below which) the wastes will be considered non-hazardous. The constituents in Condition (4)(B) reflect all of the organic constituents that were found in the untreated spent potliner from Reynolds' Troutdale facility (none were detected in the kiln residue). The PAHs in the verification list also serve as excellent indicators of the efficiency of the treatment process, because most of these substances are among the most difficult to destroy through incineration. One phthalate ester (bis(2-ethylhexyl)phthalate) found in the Troutdale spent potliner was not included in the conditional testing list (at a delisting level of 0.036 ppm), because (1) it was only detected in one out of five Troutdale spent potliner samples; (2) it was not quantified in any kiln residue sample; (3) it is a common laboratory contaminant due to its use as a plasticizer and may be a laboratory artifact; and (4) it is unlikely that this compound would exist in the kiln residue if the PAHs being monitored are not present, because this compound is easier to destroy by incineration than the PAHs (see Appendix D of "Guidance on Setting Permit Conditions and Reporting Trial Burn Results", EPA Publication No. EPA/625/6-89/019, January 1989; a copy is enclosed in the public docket for today's notice).

Five additional constituents were also detected in either the untreated spent potliner or kiln residue during the treatment of material from the first three Reynolds facilities (*i.e.*, Massena, New York; Longview, Washington; and Baie Comeau, Quebec). These constituents, (and their corresponding delisting levels), are: dichlorodifluoromethane (8.4 ppm), chloroform (0.078 ppm) methylene chloride (0.06 ppm), methyl ethyl ketone (24 ppm), and di-n-octyl phthalate (8.4 ppm). These organic compounds detected in Reynolds' samples are likely to be analytical artifacts (most are commonly used laboratory solvents). All but di-n-octyl phthalate (DNOP) are volatile compounds that clearly are not expected to survive the high temperature (1200° F) of the kiln. The Agency believes that it is highly unlikely that any of these constituents could be present at significant levels in the treated spent potliners. In the case of DNOP, the compound was not found in any spent potliner samples, and only in one out of 19 kiln residue samples at a level (1.5 ppm) barely above detection limit (1.0 ppm) and below the practical quantification limit (5 ppm). Furthermore, similar to the argument made above for the other phthalate (bis (2-ethylhexyl) phthalate), DNOP is a common laboratory contaminant (due to

its use as a plasticizer), and is easier to destroy by incineration than the PAHs chosen as verification testing parameters. Therefore, the Agency is confident that if the treatment process is successful in meeting the levels for the other difficult to destroy constituents in Condition (4)(B), it is highly unlikely that any of these other constituents could exist in the kiln residue at levels of concern.

(5) *Changes in Operating Conditions and Waste Sources:* If after completing the initial verification test period in Conditions (1)(A) and (2)(A), Reynolds decides to treat spent potliner from any other primary aluminum reduction facility; or use a new source for brown sand; or otherwise significantly change the operating conditions developed under condition (1); then Reynolds must notify EPA in writing prior to instituting the change. Reynolds must also re-institute the reporting and testing required in Conditions (1)(A) and (2)(A), and fulfill all other requirements in Conditions (1) and (2), as appropriate. Reynolds may also add one additional kiln at its R.P. Patterson facility in Gum Springs, Arkansas if it can demonstrate that the new kiln can successfully treat spent potliners. Reynolds must fulfill all requirements contained in Conditions (1) and (2) for the second kiln. Reynolds must continue to test any kiln residue generated beyond the time period specified in Condition (2)(A) until and unless notified in writing by EPA that testing Condition (2)(A) may be replaced by Condition (2)(B) to the extent directed by EPA.

The Agency is proposing that the exclusion initially only apply to kiln residue generated from spent potliner generated from Reynolds' four primary aluminum reduction facilities Massena, New York; Longview, Washington; Troutdale, Oregon; and Baie Comeau, Quebec). However, the Agency believes that the Reynolds treatment process has the potential to effectively treat a variety of spent potliner material from other aluminum producers. Therefore, the Agency is proposing to allow Reynolds to accept spent potliners from other generators if Reynolds can demonstrate through verification testing that the new waste can be effectively treated.

Reynolds requested that the exclusion be applied to kiln residue generated from one additional rotary kiln at the Gum Springs facility. As discussed above, Reynolds may add an additional kiln if it can demonstrate that spent potliners can be successfully treated by the new kiln. Reynolds must fulfill all testing and reporting requirements of conditions (1) and (2) for the exclusion to be in effect for the second kiln.

(6) *Data Submittals:* Reynolds must notify in writing the Section Chief, Delisting Section (see address below) when the rotary kiln is on-line and two weeks prior to when waste treatment will begin. The data obtained through Conditions (1)(A) and (2)(A) must be submitted to the Section Chief, Delisting Section, OSW (05-333), U.S. EPA, 401 M Street, SW., Washington, DC 20460 within the time period specified. At the Section Chief's request, Reynolds must submit any other analytical data obtained through Conditions (1)(B) and (2)(B) within the time period specified by the Section Chief. Failure to submit the required data within the specified time period or maintain the required records on site for the specified time will be considered by the Agency, at its discretion, sufficient basis to revoke the exclusion to the extent directed by EPA. All data must be accompanied by a signed copy of the following certification statement to attest to the truth and accuracy of the data submitted:

"Under civil and criminal penalty of law for the making or submission of false or fraudulent statements or representations (pursuant to the applicable provisions of the Federal Code, which include, but may not be limited to, 18 USC 1001 and 42 USC 6928), I certify that the information contained in or accompanying this document is true, accurate and complete.

As to the (those) identified section(s) of this document for which I cannot personally verify its (their) truth and accuracy, I certify as the company official having supervisory responsibility for the persons who, acting under my direct instructions, made the verification that this information is true, accurate and complete.

In the event that any of this information is determined by EPA in its sole discretion to be false, inaccurate or incomplete, and upon conveyance of this fact to the company, I recognize and agree that this exclusion of wastes will be void as if it never had effect or to the extent directed by EPA and that the company will be liable for any actions taken in contravention of the company's RCRA and CERCLA obligations premised upon the company's reliance on the void exclusion."

If made final, the proposed exclusion will initially apply only to the kiln residue generated by one rotary kiln at Gum Springs, Arkansas, during the treatment of spent potliner produced by Reynolds' four primary aluminum reduction facilities (*i.e.*, Massena, New York; Longview, Washington; Troutdale, Oregon; and Baie Comeau, Quebec). The proposed exclusion would apply to kiln residues generated from a second kiln at the site, or residues from the treatment of spent potliners from other primary aluminum production facilities, only if the requirements in Condition (5) are satisfied. The maximum annual volume of kiln residues covered by this exclusion is a total of 300,000 cubic yards for all treatment kilns operated by Reynolds.

Although management of the waste covered by this petition would be relieved from subtitle C jurisdiction upon final promulgation of an exclusion, the generator of a delisted waste must either treat, store, or dispose of the waste in an on-site facility, or ensure that the waste is delivered to an off-site storage, treatment, or disposal facility, either of which is permitted, licensed, or registered by a State to manage municipal or industrial solid waste. Alternatively, the delisted waste may be delivered to a facility that beneficially uses or reuses, or legitimately recycles or reclaims the waste, or treats the waste prior to such beneficial use, reuse, recycling, or reclamation.

## III. Effective Date

This rule, if finally promulgated, will become effective immediately upon such final promulgation. The Hazardous and Solid Waste Amendments of 1984 amended Section 3010 of RCRA to allow rules to become effective in less than six months when the regulated community does not need the six-month period to come into compliance. That is the case here, because this rule, if finalized, would reduce the existing requirements for persons generating hazardous wastes. In light of the unnecessary hardship and expense that would be imposed on this petitioner by an effective date six months after promulgation and the fact that a six-month deadline is not necessary to achieve the purpose of Section 3010, EPA believes that this exclusion should be effective immediately upon final promulgation. These reasons also provide a basis for making this rule effective immediately, upon promulgation, under the Administrative Procedure Act, pursuant to 5 U.S.C. 553(d).

## IV. Regulatory Impact

Under Executive Order 12291, EPA must judge whether a regulation is "major" and therefore subject to the requirement of a Regulatory Impact Analysis. The proposal to grant an exclusion is not major, since its effect, if promulgated, would be to reduce the overall costs and economic impact of EPA's hazardous waste management regulations. This reduction would be achieved by excluding waste generated at a specific facility from EPA's lists of hazardous wastes, thereby enabling this facility to treat its waste as non-hazardous. There is no additional impact, therefore, due to today's rule. This proposal is not a major regulation; therefore, no Regulatory Impact Analysis is required.

## V. Regulatory Flexibility Act

Pursuant to the Regulatory Flexibility Act, 5 U.S.C. 601-612, whenever an agency is required to publish a general

notice of rulemaking for any proposed or final rule, it must prepare and make available for public comment a regulatory flexibility analysis which describes the impact of the rule on small entities (*i.e.*, small businesses, small organizations, and small governmental jurisdictions). The Administrator or delegated representative may certify, however, that the rule will not have a significant economic impact on a substantial number of small entities.

This rule, if promulgated, will not have an adverse economic impact on small entities since its effect would be to reduce the overall costs of EPA's hazardous waste regulations. Accordingly, I hereby certify that this proposed regulation, if promulgated, will not have a significant economic impact on a substantial number of small entities. This regulation, therefore, does not require a regulatory flexibility analysis.

## VI. Paperwork Reduction Act

Information collection and recordkeeping requirements associated with this proposed rule have been approved by the Office of Management and Budget (OMB) under the provisions of the Paperwork Reduction Act of 1980 (P.L. 96–511, 44 U.S.C. 3501 *et seq.*) and have been assigned OMB Control Number 2050–0053.

## VII. List of Subjects in 40 CFR Part 261

Hazardous Waste, Recycling, and Reporting and recordkeeping requirements.

Dated: July 2, 1991.

**Don R. Clay,**

*Assistant Administrator, Office of Solid Waste and Emergency Response.*

For the reasons set out in the preamble, 40 CFR Part 261 is proposed to be amended as follows:

## PART 261—IDENTIFICATION AND LISTING OF HAZARDOUS WASTE

1. The authority citation for Part 261 continues to read as follows:

**Authority:** 42 U.S.C. 6905, 6912(a), 6921, 6922, and 6938.

2. In Table 2 of appendix IX of part 261, add the following wastestream in alphabetical order by facility to read as follows:

Appendix IX—Wastes Excluded Under § 260.20 and § 260.22.

TABLE 2.—WASTES EXCLUDED FROM SPECIFIC SOURCES

| Facility | Address | Waste description |
|---|---|---|
| * | * | * * * * * * * |
| Reynolds Metals Company. | Gum Springs, Arkansas. | Kiln residue (generated at a maximum annual volume of 300,000 cubic yards per year) from rotary kiln treatment of spent potliners (EPA Hazardous Waste No. K088). This exclusion does not apply to electrostatic precipitator dust generated by the rotary kiln. This exclusion initially applies only to the treatment by one rotary kiln of potliners generated by Reynolds Metals' four primary aluminum facilities (Massena, New York; Longview, Washington; Troutdale, Oregon; and Baie Comeau, Quebec) described in the petition. Reynolds may only accept spent potliners from other sources, or modify its treatment process, or add an additional rotary kiln in accordance with Condition (5). This exclusion is conditional upon the submission of data obtained from each rotary kiln after it is established at the R.P. Patterson facility in Gum Springs, Arkansas. To ensure that hazardous constituents are not present in the waste at levels of regulatory concern while the treatment facility is in operation, Reynolds must implement a testing program. This testing program must meet the following conditions for the exclusion to be valid:<br>(1) *Operating Conditions:* (A) *Initial Verification Testing:* During the first 20 days of full-scale operation of the rotary kiln, at typical operating conditions, Reynolds must monitor and submit to EPA the rotary kiln operating conditions (including, but not limited to: temperature range of the kiln (hot and cold end), kiln residue exit temperature, spent potliner feed rate, brown sand feed rate, limestone feed rate, natural gas feed rate, oxygen/air feed rate, and rotary kiln residence time of the raw materials). The ratio of the spent potliner feed rate to the combined feed rates of the spent potliner, brown sand, and limestone must be no more than 0.35. Information on all other operating conditions should encompass all conditions used for preliminary testing runs and those anticipated for subsequent waste processing. During initial verification testing, the petitioner must also demonstrate to EPA how the range of operating conditions could affect the process (*i.e.*, submit analyses of representative grab samples, as specified under Condition (2), of the kiln residue generated under the expected range of operating conditions). The source of the brown sand must be from Reynolds' dry lake beds at the Bauxite, Arkansas facility. Reynolds must submit the information specified in this condition and obtained during this initial period no later than 90 days after the treatment of the first full-scale batch of spent potliner.<br>(B) *Subsequent Verification Testing:* During subsequent verification testing, Reynolds must monitor the performance of the rotary kiln at all times to ensure that it falls within the range of operating conditions demonstrated, during initial verification testing, to be adequate to maintain the levels of hazardous constituents below the delisting levels specified in Condition (4). The feed rates of spent potliner, lime and brown sand are to be as that described in Condition (1)(A). Records of the operating conditions of the rotary kiln (including, but not limited to: temperature range of the kiln, kiln residue exit temperature, spent potliner feed rate, brown sand feed rate, limestone feed rate, natural gas feed rate, oxygen/air feed rate, and rotary kiln residence time of the raw materials) should be maintained on site for a minimum of five years. This information must be furnished upon request and made available for inspection by any employee or representative of EPA or the State of Arkansas.<br>(2) *Testing:* Sample collection and analyses (including quality control (QC) procedures) must be performed according to SW 846 methodologies. For fluoride, samples must be analyzed using Method 340.2 from "Methods for Chemical Analysis of Water and Waste". If the EPA judges the treatment process to be effective under the operating conditions used during the initial verification testing, Reynolds may replace the testing required in Condition (2)(A) with the testing required in Condition (2)(B). Reynolds must continue to test daily composites of kiln residue generated beyond the time period specified in Condition (2)(A) until and unless notified by EPA in writing that testing in Condition (2)(A) may be replaced by Condition (2)(B) (to the extent directed by EPA).<br>(A) *Initial Verification Testing:* During the first 20 operating days of full-scale operation of the new on-line rotary kiln, Reynolds must collect and analyze daily composites of kiln residue. Daily composites must be composed of representative grab samples collected every 6 hours during each 24-hour kiln operating cycle. The kiln residue samples must be analyzed, prior to the disposal of the kiln residue, for all constituents listed in Condition (4). Reynolds must report the analytical test data, including quality control information, obtained during this initial period no later than 90 days after the treatment of the first full-scale batch of untreated spent potliner. |

TABLE 2.—WASTES EXCLUDED FROM SPECIFIC SOURCES—Continued

| Facility | Address | Waste description |
|---|---|---|
| | | (B) *Subsequent Verification Testing:* Following notification by EPA, Reynolds may substitute the testing conditions in (2)(B) for (2)(A). Reynolds must collect and analyze both daily and weekly composites of kiln residue. Daily composites must be composed of representative grab samples collected every 6 hours during a 24-hour kiln operating cycle and these samples must be analyzed, prior to the disposal of the kiln residue, for leachable concentrations of cyanide and fluoride. Weekly composites must be composed of representative grab samples collected every 6 hours during a 24-hour kiln operating cycle for each day in the week that the kiln is operating. The weekly samples must be analyzed, prior to the disposal of the kiln residue, for the leachable concentrations of the inorganics listed in Condition (4)(A) and leachable levels of the semi-volatile organic compounds listed in Condition (4)(B). Analyses of both daily and weekly samples must be completed prior to the disposal of waste generated during that week as set forth in Condition (3). The analytical data, including quality control information, must be compiled, summarized, and maintained on site for a minimum of five years. These data must be furnished upon request and made available for inspection by any employee or representative of EPA or the State of Arkansas.<br>(3) *Waste Holding and Handling:* Reynolds must store, as hazardous, all kiln residue generated until verification testing (as specified in Condition (2)(A) and (2)(B)) is completed and compared, by the petitioner, with the delisting levels set forth in Condition (4). If the levels of hazardous constituents measured in the samples of kiln residue generated do not exceed any of the levels set forth in Condition (4), then the kiln residue is non-hazardous and may be managed and disposed of in accordance with all applicable solid waste regulations. If hazardous constituent levels in any daily or weekly sample exceed any of the delisting levels set in Condition (4), the kiln residue generated during the time period corresponding to this sample must be retreated until it meets these levels (analyses must be repeated) or managed and disposed of in accordance with subtitle C of RCRA. Kiln residue which is generated but for which the required analysis is not complete or valid must be managed and disposed of in accordance with Subtitle C of RCRA, until valid analysis demonstrates that Condition (4) is satisfied.<br>(4) *Delisting Levels:* All concentrations must be measured in the waste leachate by the method specified in 40 CFR part 261.24.<br>(A) The leachable concentrations for metals may not exceed the following levels (ppm): arsenic, selenium, or silver—0.60; barium—12.0; antimony—0.12; lead—0.18; cadmium—0.06; chromium or nickel—1.2; mercury—0.024; beryllium—0.012; fluoride—48.0; and cyanide—2.4 (cyanide extraction must be conducted using deionized water).<br>(B) The leachable constituent concentrations for organics may not exceed the levels listed below (ppm):<br>Acenapthene—24<br>Benz(a)anthracene—$1.2 \times 10^{-4}$<br>Benzo(b)fluoranthene—$2.4 \times 10^{-4}$<br>Benzo(a)pyrene—$2.4 \times 10^{-3}$<br>Chrysene—$2.4 \times 10^{-3}$<br>Fluoranthene—12<br>Indeno (1,2,3-cd) pyrene—$2.4 \times 10^{-3}$<br>Pyrene—12<br>(5) *Changes in Operating Conditions and Waste Sources:* If after completing the initial verification test period in Conditions (1)(A) and (2)(A), Reynolds decides to treat spent potliner from any other primary aluminum reduction facility; or use a new source for brown sand; or otherwise significantly change the operating conditions developed under condition (1); then Reynolds must notify EPA in writing prior to instituting the change. Reynolds must also reinstitute the reporting and testing required in Conditions (1)(A) and (2)(A), and fulfill all other requirements in Conditions (1) and (2), as appropriate. Reynolds may also add one additional kiln at its R.P. Patterson facility in Gum Springs, Arkansas if it can demonstrate that the new kiln can successfully treat spent potliners. Reynolds must fulfill all requirements contained in Conditions (1) and (2) for the second kiln. Reynolds must continue to test any kiln residue generated beyond the time period specified in Condition (2)(A) until and unless notified in writing by EPA that testing Condition (2)(A) may be replaced by Condition (2)(B) to the extent directed by EPA.<br>(6) *Data Submittals:* Reynolds must notify in writing the Section Chief, Delisting Section (see address below) when the rotary kiln is on-line and two weeks prior to when waste treatment will begin. The data obtained through Conditions (1)(A) and (2)(A) must be submitted to the Section Chief, Delisting Section, OSW (OS-333), U.S. EPA, 401 M Street, SW., Washington, DC 20460 within the time period specified. At the Section Chief's request, Reynolds must submit any other analytical data obtained through Conditions (1)(B) and (2)(B) within the time period specified by the Section Chief. Failure to submit the required data within the specified time period or maintain the required records on site for the specified time will be considered by the Agency, at its discretion, sufficient basis to revoke the exclusion to the extent directed by EPA. All data must be accompanied by a signed copy of the following certification statement to attest to the truth and accuracy of the data submitted:<br>"Under civil and criminal penalty of law for the making or submission of false or fraudulent statements or representations (pursuant to the applicable provisions of the Federal Code, which include, but may not be limited to, 18 U.S.C. 1001 and 42 U.S.C. 6928), I certify that the information contained in or accompanying this document is true, accurate and complete.<br>As to the (those) identified section(s) of this document for which I cannot personally verify its (their) truth and accuracy, I certify as the company official having supervisory responsibility for the persons who, acting under my direct instructions, made the verification that this information is true, accurate and complete.<br>In the event that any of this information is determined by EPA in its sole discretion to be false, inaccurate or incomplete, and upon conveyance of this fact to the company, I recognize and agree that this exclusion of wastes will be void as if it never had effect or to the extent directed by EPA and that the company will be liable for any actions taken in contravention of the company's RCRA and CERCLA obligations premised upon the company's reliance on the void exclusion."<br>* * * * * * |

[FR Doc. 91-16971 Filed 7-17-91; 8:45 am]
BILLING CODE 6560-50-M

**FEDERAL COMMUNICATIONS COMMISSION**

**47 CFR Part 73**

**[MM Docket No. 90-452; RM-7424]**

## Radio Broadcasting Services; Aguila, AZ

**AGENCY:** Federal Communications Commission.

**ACTION:** Proposed rule; dismissal of.

**SUMMARY:** This document dismisses a petition filed by Michael R. Hagans seeking the allotment of FM Channel 242A to Aguila, Arizona, for failure to establish Aguila's status as a community for allotment purposes. See 55 FR 43000, October 25, 1990. With this action, the proceeding is terminated.

**ADDRESSES:** Federal Communications Commission, Washington, DC 20554.

**FOR FURTHER INFORMATION CONTACT:** Nancy Joyner, Mass Media Bureau, (202) 634-6530.

**SUPPLEMENTARY INFORMATION:** This is a synopsis of the Commission's Report and Order, MM Docket No. 90-452, adopted June 24, 1991, and released July 10, 1991. The full text of this Commission decision is available for inspection and copying during normal business hours in the FCC Dockets Branch (room 230), 1919 M Street NW., Washington, DC. The complete text of this decision may also be purchased from the Commission's copy contractors, Downtown Copy Center, (202) 452-1422, 1714 21st Street NW., Washington, DC 20036.

**List of Subjects in 47 CFR Part 73**

Radio broadcasting.

Federal Communications Commission.

**Andrew J. Rhodes,**

*Chief, Allocations Branch, Policy and Rules Division, Mass Media Bureau.*

[FR Doc. 91-17139 Filed 7-17-91; 8:45 am]

BILLING CODE 6712-01-M

# Notices

Federal Register
Vol. 56, No. 138
Thursday, July 18, 1991

This section of the FEDERAL REGISTER contains documents other than rules or proposed rules that are applicable to the public. Notices of hearings and investigations, committee meetings, agency decisions and rulings, delegations of authority, filing of petitions and applications and agency statements of organization and functions are examples of documents appearing in this section.

## DEPARTMENT OF AGRICULTURE

### Forms Under Review by Office of Management and Budget

July 12, 1991.

The Department of Agriculture has submitted to OMB for review the following proposals for the collection of information under the provisions of the Paperwork Reduction Act (44 U.S.C. chapter 35) since the last list was published. This list is grouped into new proposals, revisions, extensions, or reinstatements. Each entry contains the following information:

(1) Agency proposing the information collection; (2) Title of the information collection; (3) Form number(s), if applicable; (4) How often the information is requested; (5) Who will be required or asked to report; (6) An estimate of the number of responses; (7) An estimate of the total number of hours needed to provide the information; (8) Name and telephone number of the agency contact person.

Questions about the items in the listing should be directed to the agency person named at the end of each entry. Copies of the proposed forms and supporting documents may be obtained from: Department Clearance Officer, USDA, OIRM, room 404-W Admin. Bldg. Washington, DC 20250, (202)-447-2118.

**Extension**

- Food and Nutrition Service

Report of Coupon Issuance and Commodity Distribution for Disaster Relief

FNS-292.

On occasion.

State or local governments; 100 responses; 55 hours.

Alan Rich, (703) 756-3100.

**Larry K. Roberson,**

*Deputy Departmental Clearance Officer.*

[FR Doc. 91-17073 Filed 7-17-91; 8:45 am]

BILLING CODE 3410-01-M

## Forest Service

### China Hat—South Loop Transmission and Distribution Line, Deschutes National Forest, Deschutes County, OR

**AGENCY:** Forest Service, USDA.

**ACTION:** Notice of intent to prepare an environmental impact statement.

**SUMMARY:** The USDA, Forest Service will prepare an environmental impact statement (EIS) to analyze and disclose the environmental impacts of issuing a 20-year special use permit for construction and maintenance of a transmission and distribution line on Forest Service land. The proposal would require an amendment to the Deschutes National Forest Land and Resource Management Plan dated August, 1990 (Forest Plan).

The Deschutes National Forest has received a request for a 20-year special use permit from Pacific Power and Light to construct and maintain a 69/115 kV transmission line and 12.5 kV distribution line. The line would enter Forest Service land in section 14, Township 18 South, Range 11 East, on the east side of the Deschutes River and proceed northwest to a junction with the existing Midstate Electric Cooperative transmission line near the center of section 14. Maps are available on request.

A public review of the issues and alternatives will be held in Bend, Oregon, in August. Actual dates, times and place of the review will be announced in The Bulletin, and other appropriate places.

**DATES:** Comments concerning the scope and implementation of this proposal must be received by August 30, 1991.

**ADDRESSES:** Submit written comments concerning the scope of the analysis to Walt Schloer, District Ranger, Bend Ranger District, 1230 NE. 3rd. suite A-262, Bend, Oregon 97701.

**FOR FURTHER INFORMATION CONTACT:** Questions and written comments about the proposed action should be directed to Mollie Chaudet, Bend Ranger District, 1230 NE. 3rd, suite A-262, Bend, Oregon 97701; phone (503) 388-7444.

**SUPPLEMENTARY INFORMATION:** The Deschutes National Forest proposes to issue a 20-year special use permit to Pacific Power and Light to construct and maintain that portion of the so called "China Hat—South Loop Transmission and Distribution Line" which would cross Deschutes National Forest Land.

Beginning at the point within the Bend Urban Growth Boundary to which Deschutes County has conditionally permitted construction of the line from the China Hat Substation, the proposed transmission and distribution line would proceed westward and cross the Deschutes River.

The east/west crossing of the Deschutes River would consist of a three pole guyed structure on both banks of the River. A typical three pole structure would have three transmission phase conductors on insulators near the top of each pole with guys to the ground in each direction opposite to the direction of the transmission line. The three distribution phase conductors and neutral conductor would be placed on insulators on one thirty foot long cross arm attached 15 feet further down the poles. The poles would be approximately 65 feet high above the ground on both sides of the river. The length of span between the two structures would be approximately 570 feet, and the distribution conductor to water clearance would be approximately 30 feet.

After crossing the River, the three pole structure would be placed as an angle point approximately 150 feet from the west bank; the route would proceed southwesterly approximately 800 feet along the northerly side of a draw and along the base of a rimrock point located near the top of the draw; from this point the route would continue northwesterly to the existing Mid-State Electric Cooperative's Redmond—Crescent 69 kV Transmission Line. The total length of this proposed action would be approximately 0.78 miles, all on lands administered by the Forest Service. The right-of-way would be 50 feet in width and include 4.7 acres of land.

The proposed action includes the removal of the existing distribution line that crosses the River. The following preliminary issues have been identified:

—The proposed action lies within the federally designated Wild and Scenic River Corridor for which a management plan is currently in process of development. What effect would the proposed action have on the Outstandingly Remarkable Values

of the River and on future options of the River Plan?

—What effect would the proposed action have on valuable features of the State designated scenic river resource?

—The proposed action lies within an area burned during the Awbrey Hall fire. Because of this, the proposed river crossing would not meet the Visual Quality Standards described by the Forest Plan, and would require a Forest Plan amendment.

—The proposed action lies within an area designated as key elk habitat in the Forest Plan. What would be the effects of the proposed action on key elk habitat, including cover and forage ratios and arrangement?

—What would be the effects of transmission lines on waterfowl flights within the river corridor.

—What would be the effects of the proposed action on cultural resources?

—What would be the effects of the proposed action on the growth potential and quality of life of Bend area residents? What would be the effects of the proposed action on the development potential of the surrounding area?

—What would be the feasibility of undergrounding the transmission line along its entire length or within the Wild and Scenic and/or Scenic Waterway area?

—What would be the effects of the location, size, design and operation characteristics of the transmission line on the property values and liveability of the surrounding area?

The preliminary alternatives for the proposed action include a No Action alternative which would preclude the applicant, Pacific Power, from constructing any transmission facilities within section 14 administered by the Forest Service. Other alternatives would be to upgrade the existing distribution line, follow other routes within section 14, or to cross the river at the COID diversion in section 13. The proposed action would require certain permits from the State of Oregon and Deschutes County. A conditional use permit has been granted by Deschutes County for that portion of the line from the China Hat Substation to the beginning of Forest Service Land. That conditional use permit is under appeal with the State Land Use Board of Appeals (LUBA). Completion of the east side of the "China Hat—South Loop" would require another conditional use permit from Deschutes County. An Oregon Scenic Waterway Permit would be required for the crossing of the Deschutes River.

The Forest Service is the lead agency.

Public meetings will be held during the analysis process to allow review of and comment on information. Public participation will be especially important at several times during the analysis. The Forest Service will be seeking information, comments, and assistance from Federal, State, local agencies, tribes, and other individuals or organizations who may be interested in or affected by the proposed actions. This information will be used in preparation of the draft EIS. The scoping process includes:

1. Identifying potential issues.
2. Identifying issues to be analyzed in depth.
3. Identifying issues which have been covered by a relevant previous environmental analysis.
4. Exploring additional alternatives.
5. Identifying potential environmental effects of the proposed action and alternatives (i.e. direct, indirect, and cumulative effects, and connected actions).
6. Determining potential cooperating agencies and task assignments.

The draft EIS is expected to be filed with the Environmental Protection Agency (EPA) and to be available for public review by October 1991. At that time, copies of the draft EIS will be distributed to interested and affected agencies, organizations, and members of the public for their review and comment. EPA will publish a Notice of Availability of the draft EIS in the **Federal Register**. It is very important that those interested in the management of the Deschutes National Forest participate at that time.

The Forest Service believes it is important to give reviewers notice at this early stage of several court rulings related to public participation in the environmental review process. First, reviewers of a draft EIS must structure their participation in the environmental review of the proposal so that it is meaningful and alerts an agency to the reviewer's position and contentions. *Vermont Yankee Nuclear Power Corp.* v. *NRDC*, 435 U.S. 519, 553 (1978). Also, environmental objections that could be raised at the draft EIS stage but that are not raised until after completion of the final EIS may be waived or dismissed by the courts. *City of Angoon* v. *Hodel*, 803 F.2d 1016, 1022 (9th Cir. 1986) and *Wisconsin Heritages, Inc.* v. *Harris*, 490 F. Supp. 1334, 1338 (E.D. Wis. 1980). Because of these court rulings, it is very important that those interested in this proposed action participate by the close of the 45-day comment period so that substantive comments and objections are made available to the Forest Service at a time when it can meaningfully consider them and respond to them in the final EIS.

To assist the Forest Service in identifying and considering issues and concerns on the proposed action, comments on the draft EIS should be as specific as possible. It is helpful if comments refer to specific pages or chapters of the draft statement. Comments may also address the adequacy of the draft EIS or the merits of the alternatives formulated and discussed in the statement. (Reviewers may wish to refer to the Council on Environmental Quality Regulations for implementing the procedural provisions of the National Environmental Policy Act at 40 CFR 1503.3 in addressing these points.)

The final EIS is scheduled to be completed by June 1992. In the final EIS, the Forest Service is required to respond to comments and responses received during the comment period that pertain to the environmental consequences discussed in the draft EIS and applicable laws, regulations, and policies considered in making the decision regarding this proposal. Jose Cruz, Forest Supervisor, Deschutes National Forest, is the responsible official, and will make a decision regarding this proposal. The responsible official will document the decision and reasons for the decision in the Record of Decision. That decision will be subject to Forest Service Appeal Regulations (36 CFR part 217.).

Dated: July 5, 1991.

**José Cruz,**

*Forest Supervisor.*

[FR Doc. 91-17086 Filed 7-17-91; 8:45 am]

BILLING CODE 3410-11-M

## Establishment of 15 New Research Natural Areas

**AGENCY:** Forest Service, USDA.

**ACTION:** Notice of decision.

**SUMMARY:** Notice is hereby given that the Chief of the Forest Service has issued Decision Notices/Designation Orders to establish 15 new Research Natural Areas within the National Forest System. Establishment of these areas is subject to administrative appeal pursuant to the rules at 36 CFR part 217.

**DATES:** The establishment of the areas is effective September 3, 1991. Also, pursuant to 36 CFR 217.8(b), the period for appealing this decision begins July 19, 1991. Any notice of appeal must be received in writing by [Mr. **September 3, 1991.**

**ADDRESSES:** Copies of the establishment records and of the Decision Notices/ Designation Orders for the 15 areas are available upon written request to the Chief (4060), Forest Service, USDA, P.O. Box 96090, Washington, DC 20090-6090. Copies are available for inspection in the office of the Director of Forest Management Research, First Floor, Northwest Wing, Auditor's Building, 201 Fourteenth Street SW., Washington, DC. To facilitate entry into the building, visitors are encouraged to call in advance (202-453-9552).

Anyone who wishes to appeal must submit a notice of appeal to the Honorable Edward Madigan, Secretary of Agriculture, Fourteenth and Independence Avenue SW., Washington, DC 20250.

**FOR FURTHER INFORMATION CONTACT:** Russell M. Burns, Forest Management Research Staff (202) 453-9549.

**SUPPLEMENTARY INFORMATION:** Research Natural Areas are part of a national network of ecological areas on National Forest System lands designated in perpetuity for research, education, and/ or maintenance of biological diversity. These areas are managed for nonmanipulative research, observation, and study, and they may assist in implementing provisions of special statutes, such as recovery of species under the Endangered Species Act and monitoring of resources under the National Forest Management Act. The establishment of the 15 new areas will bring the total number of Research Natural Areas on National Forest System lands to 246.

The new areas to be established are as follows:

| Name of RNA | State | County | National forest | Acres |
|---|---|---|---|---|
| Nancy Brook | NH | Grafton | White Mountain | 1,385 |
| Ozark Hill Prairie | IL | Alexander | Shawnee | 535 |
| Tucker Lakes Hemlocks | WI | Price | Chequamegon | 158 |
| Burke Branch | IL | Pope | Shawnee | 206 |
| Dutch Creek | ID | Idaho | Clearwater | 303 |
| Moose Creek Plateau | ID | Caribou | Targhee | 440 |
| Cliff Dwellers Pasture | UT | San Juan | Manti-Lasal | 264 |
| Big Creek | MT | Lincoln | Kootenai | 190 |
| Boulder Creek | MT | Ravalli | Bitterroot | 1,042 |
| Council Grove | MT | Missoula | Lolo | 160 |
| Aquarius | ID | Clearwater | Clearwater | 3,900 |
| Thurmon Creek | ID | Fremont | Targhee | 330 |
| Mesita de los Ladrones | NM | San Miguel | Santa Fe | 500 |
| Sims Peak Potholes | UT | Uintah | Ashley | 650 |
| Battle Point | MN | Itasca | Chippewa | 329 |

When necessary, a Designation Order to establish a Research Natural Area (RNA) amends the relevant forest plan to assure consistency between the establishment record and the management direction in the forest plan. In these cases, notice of the establishment of a new RNA and notice of forest plan amendment are accomplished simultaneously by publication in the **Federal Register.**

The effective date of establishment of these 15 new areas has been delayed to permit giving public notice of the decision and to permit appeal as provided in 36 CFR part 217. Pursuant to 36 CFR 217.7(a), review of the Chief's decision by the Secretary is wholly discretionary.

Dated: July 9, 1991.

**F. Dale Robertson,**

*Chief.*

[FR Doc. 91-17116 Filed 7-17-91; 8:45 am]

BILLING CODE 3410-11-M

## COMMISSION ON CIVIL RIGHTS

### Agenda and Public Meeting of the Minnesota Advisory Committee

Notice is hereby given, pursuant to the provisions of the rules and regulations of the U.S. Commission on Civil Rights, that a meeting of the Minnesota Advisory Committee to the Commission will be held from 6 p.m. until 9 p.m. on Monday, August 12, 1991, at the Faculty Lounge of the Janet Wallace Fine Arts Center, Macalester College, St. Paul, Minnesota. The purpose of this meeting is to discuss current issues, orient members, and plan for future activities.

Persons desiring additional information should contact Committee Chairperson Mary E. Ryland, at (218) 727-3673, or Constance Davis, Director of the Midwestern Regional Office, U.S. Commission on Civil Rights, at (312) 353-8311. Hearing-impaired persons who will attend the meeting and require the services of a sign language interpreter should contact the Regional Office at least five (5) working days before the scheduled date of the meeting.

The meeting will be conducted pursuant to the provisions of the rules and regulations of the Commission.

Dated at Washington, DC, July 9, 1991.

**Carol-Lee Hurley,**

*Chief, Regional Programs Coordination Unit.*

[FR Doc. 91-17127 Filed 7-17-91; 8:45 am]

BILLING CODE 6335-01-M

## DEPARTMENT OF COMMERCE

### International Trade Administration

### United States-Canada Free-Trade Agreement, Article 1904 Binational Panel Reviews; Request for Panel Review

**AGENCY:** United States-Canada Free-Trade Agreement, Binational Secretariat, United States Section, International Trade Administration, Department of Commerce.

**ACTION:** Notice of First Request for Panel Review of Final Results of Countervailing Duty Administration Review made by the Department of Commerce, International Trade Administration, Import Administration, respecting Live Swine from Canada, filed by the Canadian Pork Council and its Members with the United States Section of the Binational Secretariat on July 8, 1991.

**SUMMARY:** On July 8, 1991, the Canadian Pork Council and its Members filed a Request for Panel Review with the United States Section of the Binational Secretariat pursuant to Article 1904 of the United States-Canada Free-Trade Agreement. Panel review was requested of the Final Results of the Countervailing Duty Administrative

Review respecting Live Swine From Canada made by the International Trade Administration, Import Administration, Import Administration File Number A-122-404. In addition, the Government of Canada and the Gouvernement Du Quebec filed Requests for Panel Review in this matter. The Binational Secretariat has assigned Case Number USA-91-1904-03 to these Requests.

**FOR FURTHER INFORMATION CONTACT:** James R. Holbein, United States Secretary, Binational Secretariat, suite 4012, 14th and Constitution Avenue, Washington, DC 20230, (202) 377-5438.

**SUPPLEMENTARY INFORMATION:** Chapter 19 of the United States-Canada Free-Trade Agreement ("Agreement") establishes a mechanism to replace domestic judicial review of final determinations in antidumping and countervailing duty cases involving imports from the other country with review by independent binational panels. When a Request for Panel Review is filed, a panel is established to act in place of national courts to review expeditiously the final determination to determine whether it conforms with the antidumping or countervailing duty law of the country that made the determination.

Under Article 1904 of the Agreement, which came into force on January 1, 1989, the Government of the United States and the Government of Canada established Rules of Procedure for Article 1904 Binational Panel Review ("Rules"). These Rules were published in the **Federal Register** on December 30, 1988 (53 FR 53212). The Rules were amended by Amendments to the Rules of Procedure for Article 1904 Binational Panel Reviews, published in the **Federal Register** on December 27, 1989 (54 FR 53165). The panel review in this matter will be conducted in accordance with these Rules.

Rule 35(2) requires the Secretary of the responsible section of the FTA Binational Secretariat to publish a notice that a first Request for Panel Review has been received. A first Request for Panel Review was filed with the United States Section of the Binational Secretariat, pursuant to Article 1904 of the Agreement, on July 8, 1991, requesting panel review of the final determination described above.

Rule 35(1)(C) of the Rules provides that:

(a) A party or interested person may challenge the final determination in whole or in part by filing a Complaint in accordance with rule 39 within 30 days after the filing of the first Request for Panel Review (the deadline for filing a Complaint is August 7, 1991);

(b) A Party, investigating authority or interested person that does not file a Complaint may participate in the panel review by filing a Notice of Appearance in accordance with Rule 40 within 45 days after the filing of the first Request for Panel Review (the deadline for filing a Notice of Appearance is August 22, 1991); and

(c) The panel review shall be limited to the allegations or error of fact of law, including the jurisdiction of the investigating authority, that are set out in the Complaints filed in the panel review and the procedural and substantive defenses raised in the Panel review.

Dated: July 12, 1991.

**James R. Holbein,**

*United States Secretary, FTA Binational Secretariat.*

[FR Doc. 91-17089 Filed 7-17-91; 8:45 am]

BILLING CODE 3510-GT-M

## DEPARTMENT OF DEFENSE

### Office of the Secretary

### Per Diem, Travel and Transportation Allowance Committee

**AGENCY:** Per Diem, Travel and Transportation Allowance Committee.

**ACTION:** Publication of changes in per diem rates.

**SUMMARY:** The Per Diem, Travel and Transportation Allowance Committee is publishing Civilian Personnel Per Diem Bulletin Number 156. This bulletin lists changes in per diem rates prescribed for U.S. Government employees for official travel in Alaska, Hawaii, Puerto Rico, the Northern Mariana Islands and possessions of the United States. Bulletin Number 156 is being published in the **Federal Register** to assure that travelers are paid per diem at the most current rates.

**EFFECTIVE DATE:** July 1, 1991.

**SUPPLEMENTARY INFORMATION:** This document gives notice of changes in per diem rates prescribed by the Per Diem, Travel and Transportation Allowance Committee for non-foreign areas outside the continental United States. Distribution of Civilian Personnel Per Diem Bulletins by mail was discontinued effective June 1, 1979. Per Diem Bulletins published periodically in the **Federal Register** now constitute the only notification of change in per diem rates to agencies and establishments outside the Department of Defense.

The text of the Bulletin follows:

BILLING CODE 3810-01-M

MAXIMUM PER DIEM RATES FOR OFFICIAL TRAVEL IN ALASKA, HAWAII, THE COMMONWEALTHS OF PUERTO RICO AND THE NORTHERN MARIANA ISLANDS AND POSSESSIONS OF THE UNITED STATES BY FEDERAL GOVERNMENT CIVILIAN EMPLOYEES

| LOCALITY | MAXIMUM LODGING AMOUNT (A) + | M&IE RATE (B) = | MAXIMUM PER DIEM RATE (C) | EFFECTIVE DATE |
|---|---|---|---|---|
| ALASKA: | | | | |
| ADAK 5/ | $ 35 | $ 50 | $ 85 | 07-01-91 |
| ANAKTUVUK PASS | 83 | 57 | 140 | 12-01-90 |
| ANCHORAGE | | | | |
| 05-16--09-15 | 137 | 59 | 196 | 06-01-91 |
| 09-16--05-15 | 79 | 54 | 133 | 01-01-91 |
| ANIAK | 73 | 36 | 109 | 07-01-91 |
| ATQASUK | 129 | 86 | 215 | 12-01-90 |
| BARROW | 86 | 73 | 159 | 06-01-91 |
| BETHEL | 70 | 73 | 143 | 12-01-90 |
| BETTLES | 65 | 45 | 110 | 12-01-90 |
| CANTWELL | 62 | 46 | 108 | 06-01-91 |
| COLD BAY | 71 | 54 | 125 | 12-01-90 |
| COLDFOOT | 75 | 47 | 122 | 12-01-90 |
| CORDOVA | 74 | 89 | 163 | 01-01-91 |
| CRAIG | 67 | 35 | 102 | 07-01-91 |
| DILLINGHAM | 76 | 38 | 114 | 12-01-90 |
| DUTCH HARBOR-UNALASKA | 91 | 54 | 145 | 12-01-90 |
| EIELSON AFB | | | | |
| 05-15--09-15 | 92 | 62 | 154 | 07-01-91 |
| 09-16--05-14 | 60 | 59 | 119 | 01-01-91 |
| ELMENDORF AFB | | | | |
| 05-16--09-15 | 137 | 59 | 196 | 06-01-91 |
| 09-16--05-15 | 79 | 54 | 133 | 01-01-91 |
| EMMONAK | 60 | 40 | 100 | 06-01-91 |
| FAIRBANKS | | | | |
| 05-15--09-15 | 92 | 62 | 154 | 07-01-91 |
| 09-16--05-14 | 60 | 59 | 119 | 01-01-91 |
| FALSE PASS | 80 | 37 | 117 | 06-01-91 |
| FT. RICHARDSON | | | | |
| 05-16--09-15 | 137 | 59 | 196 | 06-01-91 |
| 09-16--05-15 | 79 | 54 | 133 | 01-01-91 |
| FT. WAINWRIGHT | | | | |
| 05-15--09-15 | 92 | 62 | 154 | 07-01-91 |
| 09-16--05-14 | 60 | 59 | 119 | 01-01-91 |
| HOMER | 57 | 61 | 118 | 01-01-91 |
| JUNEAU | 96 | 70 | 166 | 01-01-91 |
| KATMAI NATIONAL PARK | 89 | 59 | 148 | 12-01-90 |
| KENAI-SOLDOTNA | | | | |
| 05-01--09-30 | 86 | 70 | 156 | 05-01-91 |
| 10-01--04-30 | 64 | 70 | 134 | 01-01-91 |

MAXIMUM PER DIEM RATES FOR OFFICIAL TRAVEL IN ALASKA, HAWAII, THE COMMONWEALTHS OF PUERTO RICO AND THE NORTHERN MARIANA ISLANDS AND POSSESSIONS OF THE UNITED STATES BY FEDERAL GOVERNMENT CIVILIAN EMPLOYEES

| LOCALITY | MAXIMUM LODGING AMOUNT (A) + | M&IE RATE (B) | MAXIMUM PER DIEM RATE = (C) | EFFECTIVE DATE |
|---|---|---|---|---|
| ALASKA: (CONT'D) | | | | |
| KETCHIKAN | $ 81 | $ 75 | $156 | 01-01-91 |
| KING SALMON 3/ | 75 | 59 | 134 | 12-01-90 |
| KLAWOCK | 75 | 36 | 111 | 07-01-91 |
| KODIAK | 68 | 61 | 129 | 01-01-91 |
| KOTZEBUE | 133 | 58 | 191 | 06-01-91 |
| KUPARUK OILFIELD | 75 | 52 | 127 | 12-01-90 |
| METLAKATLA | 79 | 44 | 123 | 07-01-91 |
| MURPHY DOME | | | | |
| 05-15--09-15 | 92 | 62 | 154 | 07-01-91 |
| 09-16--05-14 | 60 | 59 | 119 | 01-01-91 |
| NELSON LAGOON | 102 | 39 | 141 | 06-01-91 |
| NOATAK | 77 | 66 | 143 | 12-01-90 |
| NOME | 61 | 75 | 136 | 01-01-91 |
| NOORVIK | 77 | 66 | 143 | 12-01-90 |
| PETERSBURG | 61 | 54 | 115 | 01-01-91 |
| POINT HOPE | 99 | 61 | 160 | 12-01-90 |
| POINT LAY | 106 | 73 | 179 | 12-01-90 |
| PRUDHOE BAY-DEADHORSE | 64 | 57 | 121 | 12-01-90 |
| SAND POINT | 75 | 36 | 111 | 07-01-91 |
| SEWARD | | | | |
| 05-01--09-30 | 79 | 52 | 131 | 07-01-91 |
| 10-01--04-30 | 48 | 49 | 97 | 10-01-91 |
| SHUNGNAK | 77 | 66 | 143 | 12-01-90 |
| SITKA-MT. EDGECOMBE | 65 | 63 | 128 | 01-01-91 |
| SKAGWAY | 81 | 75 | 156 | 01-01-91 |
| SPRUCE CAPE | 68 | 61 | 129 | 01-01-91 |
| ST. GEORGE | 100 | 39 | 139 | 06-01-91 |
| ST. MARY'S | 60 | 40 | 100 | 12-01-90 |
| ST. PAUL ISLAND | 81 | 34 | 115 | 12-01-90 |
| TANANA | 61 | 75 | 136 | 01-01-91 |
| TOK | 59 | 59 | 118 | 01-01-91 |
| UMIAT | 97 | 63 | 160 | 12-01-90 |
| UNALAKLEET | 58 | 47 | 105 | 12-01-90 |
| VALDEZ | | | | |
| 05-01--10-31 | 116 | 66 | 182 | 05-01-91 |
| 11-01--04-30 | 85 | 63 | 148 | 01-01-91 |
| WAINWRIGHT | 90 | 75 | 165 | 12-01-90 |
| WALKER LAKE | 82 | 54 | 136 | 12-01-90 |
| WRANGELL | 81 | 75 | 156 | 01-01-91 |
| YAKUTAT | 70 | 40 | 110 | 12-01-90 |

MAXIMUM PER DIEM RATES FOR OFFICIAL TRAVEL IN ALASKA, HAWAII, THE COMMONWEALTHS OF PUERTO RICO AND THE NORTHERN MARIANA ISLANDS AND POSSESSIONS OF THE UNITED STATES BY FEDERAL GOVERNMENT CIVILIAN EMPLOYEES

| LOCALITY | MAXIMUM LODGING AMOUNT (A) + | M&IE RATE (B) | MAXIMUM PER DIEM RATE = (C) | EFFECTIVE DATE |
|---|---|---|---|---|
| ALASKA: (CONT'D) | | | | |
| OTHER 3, 4/ | $ 63 | $ 47 | $110 | 07-01-91 |
| AMERICAN SAMOA | 55 | 47 | 102 | 12-01-90 |
| GUAM | 99 | 59 | 158 | 12-01-90 |
| HAWAII: | | | | |
| ISLAND OF HAWAII: HILO | 60 | 38 | 98 | 06-01-91 |
| ISLAND OF HAWAII: OTHER | 106 | 43 | 149 | 06-01-91 |
| ISLAND OF KAUAI | 112 | 48 | 160 | 06-01-91 |
| ISLAND OF KURE 1/ | | 13 | 13 | 12-01-90 |
| ISLAND OF MAUI: KIHEI | | | | |
| 04-01--12-19 | 85 | 50 | 135 | 12-01-90 |
| 12-20--03-31 | 97 | 50 | 147 | 12-20-90 |
| ISLAND OF MAUI: OTHER | 62 | 50 | 112 | 06-01-91 |
| ISLAND OF OAHU | 95 | 42 | 137 | 06-01-91 |
| OTHER | 59 | 47 | 106 | 12-01-90 |
| JOHNSTON ATOLL 2/ | 18 | 17 | 35 | 12-01-90 |
| MIDWAY ISLANDS 1/ | | 13 | 13 | 12-01-90 |
| NORTHERN MARIANA ISLANDS: | | | | |
| ROTA | 45 | 31 | 76 | 12-01-90 |
| SAIPAN | 68 | 47 | 115 | 12-01-90 |
| TINIAN | 44 | 24 | 68 | 12-01-90 |
| OTHER | 20 | 13 | 33 | 12-01-90 |
| PUERTO RICO: | | | | |
| BAYAMON | | | | |
| 04-16--12-14 | 93 | 90 | 183 | 07-01-91 |
| 12-15--04-15 | 116 | 92 | 208 | 12-15-91 |
| CAROLINA | | | | |
| 04-16--12-14 | 93 | 90 | 183 | 07-01-91 |
| 12-15--04-15 | 116 | 92 | 208 | 12-15-91 |
| FAJARDO (INCLUDING LUQUILLO) | | | | |
| 04-16--12-14 | 93 | 90 | 183 | 07-01-91 |
| 12-15--04-15 | 116 | 92 | 208 | 12-15-91 |
| FT. BUCHANAN (INCL GSA SERV CTR, GUAYNABO) | | | | |
| 04-16--12-14 | 93 | 90 | 183 | 07-01-91 |
| 12-15--04-15 | 116 | 92 | 208 | 12-15-91 |
| MAYAGUEZ | 84 | 58 | 142 | 07-01-91 |
| PONCE | 113 | 90 | 203 | 07-01-91 |
| ROOSEVELT ROADS | | | | |
| 04-16--12-14 | 66 | 61 | 127 | 07-01-91 |
| 12-15--04-15 | 102 | 64 | 166 | 12-15-91 |

MAXIMUM PER DIEM RATES FOR OFFICIAL TRAVEL IN ALASKA, HAWAII, THE COMMONWEALTHS OF PUERTO RICO AND THE NORTHERN MARIANA ISLANDS AND POSSESSIONS OF THE UNITED STATES BY FEDERAL GOVERNMENT CIVILIAN EMPLOYEES

| LOCALITY | MAXIMUM LODGING AMOUNT (A) + | M&IE RATE (B) = | MAXIMUM PER DIEM RATE (C) | EFFECTIVE DATE |
|---|---|---|---|---|
| PUERTO RICO: (CONT'D) | | | | |
| SABANA SECA | | | | |
| 04-16--12-14 | $ 93 | $ 90 | $183 | 07-01-91 |
| 12-15--04-15 | 116 | 92 | 208 | 12-15-91 |
| SAN JUAN (INCL SAN JUAN COAST GUARD UNITS) | | | | |
| 04-16--12-14 | 93 | 90 | 183 | 07-01-91 |
| 12-15--04-15 | 116 | 92 | 208 | 12-15-91 |
| OTHER | 63 | 63 | 126 | 07-01-91 |
| VIRGIN ISLANDS OF THE U.S. | | | | |
| 05-01--11-30 | 95 | 63 | 158 | 05-01-91 |
| 12-01--04-30 | 128 | 66 | 194 | 12-01-90 |
| WAKE ISLAND 2/ | 4 | 17 | 21 | 12-01-90 |
| ALL OTHER LOCALITIES | 20 | 13 | 33 | 12-01-90 |

FOOTNOTES

1/ Commercial facilities are not available. The per diem rate covers charges for meals in available facilities plus an additional allowance for incidental expenses and will be increased by the amount paid for Government quarters by the traveler.

2/ Commercial facilities are not available. Only Government-owned and contractor operated quarters and mess are available at this locality. This per diem rate is the amount necessary to defray the cost of lodging, meals and incidental expenses.

3/ On any day when US Government or contractor quarters are available and US Government or contractor messing facilities are used, a per diem rate of $16.25 is prescribed to cover meals and incidental expenses at Shemya AFB and the following Air Force Stations: Cape Lisburne, Cape Newenham, Cape Romanzof, Clear, Fort Yukon, Galena, Indian Mountain, King Salmon, Sparrevohn, Tatalina and Tin City. This rate will be increased by the amount paid for US Government or contractor quarters and by $4 for each meal procured at a commercial facility. The rates of per diem prescribed herein apply from 0001 on the day after arrival through 2400 on the day prior to the day of departure.

4/ On any day when US Government or contractor quarters are available and US Government or contractor messing facilities are used, a per diem rate of $34 is prescribed to cover meals and incidental expenses at Amchitka Island,

MAXIMUM PER DIEM RATES FOR OFFICIAL TRAVEL IN ALASKA, HAWAII, THE COMMONWEALTHS OF PUERTO RICO AND THE NORTHERN MARIANA ISLANDS AND POSSESSIONS OF THE UNITED STATES BY FEDERAL GOVERNMENT CIVILIAN EMPLOYEES

---

Alaska. This rate will be increased by the amount paid for US Government or contractor quarters and by $10 for each meal procured at a commercial facility. The rates of per diem prescribed herein apply from 0001 on the day after arrival through 2400 on the day prior to the day of departure.

5/ On any day when US Government or contractor quarters are available and US Government or contractor messing facilities are used, a per diem rate of $25 is prescribed instead of the rate prescribed in the table.

BILLING CODE 3810-01-C

Dated: July 12, 1991.

L.M. Bynum,

*OSD Federal Register Liaison Officer Department of Defense.*

[FR Doc. 91-17057 Filed 7-17-91; 8:45 am]

BILLING CODE 3810-01-M

## Department of the Army

### Army Science Board; Open Meeting

In accordance with section 10(a)(2) of the Federal Advisory Committee Act (Pub. L. 92-463), announcement is made of the following committee meeting:

*Name of the Committee:* Army Science Board (ASB).

*Dates of Meeting:* July 23, 1991.

*Time:* 0830-1600 hours each day.

*Place:* Alabama A&M University/MICOM. Huntsville, Alabama.

*Agenda:* The Army Science Board (ASB) Ad Hoc Subgroup on Initiatives to Improve HBCU/MIs Infrastructure will meet to receive briefings at the university level on how to best support the infrastructure of the HBCU/MIs. This meeting will be open to the public. Any interested person may attend, appear before, or file statements with the committee at the time and in the manner permitted by the committee. The ASB Administrative Officer, Sally Warner, may be contacted for further information at (703) 695-0781/0782.

Sally A. Warner,

*Administrative Officer, Army Science Board.*

[FR Doc. 91-17149 Filed 7-17-91; 8:45 am]

BILLING CODE 3710-08-M

### Final Notice of Prospective Partially Exclusive Licenses

**AGENCY:** U.S. Army Laboratory Command, DOD.

**ACTION:** Final notice.

**SUMMARY:** In accordance with 37 CFR 404.7, announcement is made of prospective partially exclusive licenses for U.S. Patent No. 4,410,902, entitled, "Planar Doped Barrier Semiconductor Device," issued to Riger J. Malik on October 18, 1983. Further applications for licenses in this matter will not be entertained. This action is being made final.

**EFFECTIVE DATE:** July 18, 1991.

**FOR FURTHER INFORMATION CONTACT:** Mr. William H. Anderson, Intellectual Property Law Division, U.S. Army Communications-Electronics Command, ATTN: AMSEL-LG-L, Fort Monmouth, New Jersey 07703-5010, COMM: (908) 532-4112.

**SUPPLEMENTARY INFORMATION:** Heretofore Notice of Prospective Exclusive Licenses was published on Wednesday, May 1, 1991, **Federal Register**, Vol. 56, No. 84, page 19987. In consideration of the objections received thereon, the following actions will be taken:

Partially exclusive licenses for U.S. Patent 4,410,902 have been or will be granted to Alpha Industries, Inc., 20 Sylvan Road, Woburn, MA 01801 and Hewlett-Packard Company, 1412 Fountaingrove Parkway, Santa Rosa, CA 95403-1799, provided said companies meet the requirements of the Technology Transfer Act of 1986 and appropriate regulations.

Kenneth L. Denton,

*Alternate Army Federal Register Liaison Officer.*

[FR Doc. 91-17053 Filed 7-17-91; 8:45 am]

BILLING CODE 3710-08-M

## Department of the Navy

### Record of Decision To Realign Fleet Support Functions From Naval Station Puget Sound Sand Point to Naval Station Puget Sound Everett

Pursuant to section 102(2)(c) of the National Environmental Policy Act (NEPA) of 1969 and the Council on Environmental Quality Regulations (40 CFR part 1500-1508), the Department of the Navy announces its decision to realign fleet support functions from Naval Station Puget Sound (NSPS) Sand Point to NSPS Everett. This action was identified as the preferred alternative in the Final Environmental Impact Statement (FEIS) that was distributed to the public on May 24, 1991. The preferred alternative was also identified as the environmentally preferred alternative.

The realignment of NSPS Sand Point to NSPS Everett is being conducted in compliance with the Base Realignment and Closure Act of 1988. In accord with this act, alternatives involving relocation of NSPS Sand Point facilities to other Navy installations and the no action alternative were not considered. This decision to realign NSPS Sand Point is being made independently of any proposals being considered under the Base Closure and Realignment Act of 1990.

Implementation of this action involves relocating the commissary/exchange complex (which includes the vehicle service station and garage, coffee shop, thrift shop, tailor shop, country store, class VI store, and associated storage), Northwest Credit Union, Education Services Office, Auto Hobby Shop, Family Service Center, Arts and Craft Shop, and some security and administrative functions from NSPS Sand Point to a 60-acre site located about seven miles north of NSPS Everett, and about two miles northwest of Marysville, within the Tulalip Indian Reservation. In addition, a chapel/religious center, bachelors officers' quarters, child development center, educational services/library and indoor firing range, and fleet deployment parking will be constructed at this site. The previously proposed fleet deployment parking would not be constructed at NSPS Sand Point. Implementation of this action also involves adding functions at NSPS Everett, including 43,304 square feet of additions to two planned buildings (Fleet Support Headquarters and Port Services) and accelerated construction of the planned Logistics Support Complex. A maxi-mart will be established in an existing building at NSPS Sand Point to serve personnel remaining.

In response to a solicitation for offers, the Navy received 35 proposals for sites in the vicinity of NSPS Everett to construct facilities to accommodate relocated NSPS Sand Point facilities. Evaluation criteria of these sites included proximity to NSPS Everett, existing compatibility with appropriate local jurisdiction master plan and zoning requirements, availability of utilities, and adequacy of existing or proposed traffic plans. Three sites met the criteria, and were studied in detail in the environmental impact statement.

Alternative 1, as identified in the FEIS, is a 60 acre, triangularly shaped site located about nine miles northeast of NSPS Everett in Snohomish County. The site has been in agricultural use and is zoned for industrial use. This alternative was not chosen given environmental and public concerns over incompatible land use, need for extensive and possibly undesirable road improvements, the presence of wetlands on the site, and traffic and noise impacts on residential uses in the area. Alternative 3, as identified in the FEIS, is an elongated rectangularly shaped site located about four miles south of NSPS Everett, and about 1.5 miles northeast of Paine Field, within the City of Everett. This site has been used for gravel extraction and is planned for business park development. This alternative was not chosen due to environmental and public concerns regarding incompatible land use, need for extensive and possibly undesirable road improvements, air quality impacts, and impacts on police and fire protection service response times. Alternative 2, as identified in the FEIS, is a 60 acre rectangularly shaped site located about seven miles north of NSPS, and about two miles northwest of

Marysville, within the Tulalip Indian Reservation. This site is wooded and has been partially harvested; it is planned for business park development. This alternative was selected as the preferred alternative, and chosen for implementation, because the key environmental impacts were related to groundwater, fisheries, and the heron rookery, all of which can be mitigated by careful site design. The need for water, sewer, and road improvements can be accommodated during site preparation, or by the current owners.

Mitigation measures that will be implemented as part of this action include: installation of above ground tanks and underground piping associated with the Auto Hobby Shop will be in accordance with Washington Department of Ecology standards; obtaining a Notice of Construction permit from the Puget Sound Air Pollution Control Agency for the installation of any underground gasoline storage tanks, boilers with a heat imput greater than one million BTU per hour, fuel tanks with a capacity greater than 40,000 gallons, and the indoor firing range; submitting plans to the Washington Office of Archeology and Historic Preservation for review prior to establishement of the Maxi-Mart at NSPS Sand Point in building 30 to assure that changes to the interior of this building do not affect the historic character of this structure, which may be eligible as part of a district for listing on the National Register of Historic Places; participation in a Transportation Demand Study with federal, state, and local agencies to determine project impacts on traffic, public transportation, and roads and apportionment mitigation; as a result of the Transportation Demand Study analyses, the Navy will conform to mitigation measures that will be in compliance with the current State of Washingtion State Implementation Plan Standards, and provide the Environmental Protection Agency's Regional Office copies of the air quality analysis for review of the status of the mitigation measures; construction of a wastewater treatment facility if connection to the City of Marysville sewage system is not available, construction and operation of this treatment plant would be in compliance with the regulations promulgated by the Washington Department of Ecology.

The Navy filed a Draft Environmental Impact Statement for the realignment action on October 10, 1990, and held public hearings on November 7, 1990, in Everett and on November 8, 1990, in Seattle. In addition to comments delivered from 17 individuals at these hearings, 11 letter were received from public agencies and 28 letters were received from individuals. Comments in general centered on potential adverse impacts on traffic, incompatible land use, and noise at Alternatives 1 and 3. In addition, concerns were raised about potential wetland impacts associated with Alternative 1 and potential fisheries impacts associated with Alternative 3. The Navy filed a FEIS on May 24, 1991.

The Navy believes that there are no outstanding issues to be resolved with respect to this project. Questions regarding the environmental impact statement prepared for this action may be directed to Commanding Officer, Engineering Field Activity Northwest, Naval Facilities Engineering Command, 3505 Anderson Hill Road NW, Silverdale, WA 98383. Attn: Mr. Don Morris, telephone (206) 476-5773.

Dated: July 12, 1991.

**Nancy S. Stehle,**

*Deputy Director Environment Office of Assistant Secretary of the Navy (Installations and Environment).*

Dated: July 12, 1991.

**Wayne Baucino,**

*Federal Register Liaison Officer.*

[FR Doc. 91-17060 Filed 7-17-91; 8:45 am]

BILLING CODE 3810-AE-M

## DEPARTMENT OF EDUCATION

### Notice of Proposed Information Collection Requests

**AGENCY:** Department of Education.

**ACTION:** Notice of proposed information collection requests.

**SUMMARY:** The Director, Office of Information Resources Management, invites comments on the proposed information collection requests as required by the Paperwork Reduction Act of 1980.

**DATES:** Interested persons are invited to submit comments on or before August 19, 1991.

**ADDRESSES:** Written comments should be addressed to the Office of Information and Regulatory Affairs, Attention: Dan Chenok: Desk Officer, Department of Education, Office of Management and Budget, 726 Jackson Place NW., room 3208, New Executive Office Building, Washington, DC 20503. Requests for copies of the proposed information collection requests should be addressed to Mary P. Liggett, Department of Education, 400 Maryland Avenue SW., room 5624, Regional Office Building 3, Washington, DC 20202.

**FOR FURTHER INFORMATION CONTACT:** Mary P. Piggett (202) 708-5174.

**SUPPLEMENTARY INFORMATION:** Section 3517 of the Paperwork Reduction Act of 1980 (44 U.S.C. chapter 35) requires that the Office of Management and Budget (OMB) provide interested Federal agencies and the public an early opportunity to comment on information collection requests. OMB may amend or waive the requirement for public consultation to the extent that public participation in the approval process would defeat the purpose of the information collection, violate State or Federal law, or substantially interfere with any agency's ability to perform its statutory obligations.

The Acting Director, Office of Information Resources Management, publishes this notice containing proposed information collection requests prior to submission of these requests to OMB. Each proposed information collection, grouped by office, contains the following:

(1) Type of review requested, e.g., new, revision, extension, existing or reinstatement, (2) Title; (3) Frequency of collection; (4) The affected public; (5) Reporting burden; and/or (6) Recordkeeping burden; and (7) Abstract. OMB invites public comment at the address specified above. Copies of the requests are available from Mary P. Liggett at the address specified above.

Dated: July 12, 1991.

**Mary P. Liggett,**

*Acting Director, Office of Information Resources Management.*

### Office of Postsecondary Education

Type of Review: Extension.

Title: Institutional Payment Summary (IPS) and Pre-Award IPS.

Frequency: Quarterly.

Affected Public: Business or other for-profit. Non-profit institutions; Small businesses or organizations.

Reporting Burden:
Responses: 70,000
Burden Hours: 70,000

Recordkeeping Burden:
Recordkeepers: 7,000
Burden Hours: 3,500

Abstract: This form is used by higher education institutions to report cumulative payment data for students eligible to receive a Pell Grant. The Department uses this information to determine adjustments to an institution's Pell Grant funding level and to monitor the disbursement of Federal dollars to eligible student applicants.

**Office of Postsecondary Education**

Type of Review: Reinstatement.
Title: Reports of Performance and Financial Status for the Cooperative Education Program.
Frequency: Annually.
Affected Public: Non-profit institutions.
Reporting Burden:
Responses: 170
Burden Hours: 850
Recordkeeping Burden:
Recordkeepers: 170
Burden Hours: 2.040
Abstract: These reports will be submitted to the Department by non-profit higher education institutions. The Department uses the information collected to assess the accomplishments of program goals and objectives, and to close out grants.

**Office of Postsecondary Education**

Type of Review: Extension.
Title: Application for New and Continuation Grants Under the Upward Bound Program.
Frequency: Annually.
Affected Public: State or local governments; Non-profit institutions; Small Businesses or organizations.
Reporting Burden:
Responses: 700
Burden Hours: 23,800
Recordkeeping Burden:
Recordkeepers: 0
Burden Hours: 0
Abstract: This form will be used by State Educational Agencies to apply for funds under the Upward Bound Program. The Department uses the information to make grant awards.

[FR Doc. 91-17070 Filed 7-17-91; 8:45 am]
BILLING CODE 4000-01-M

## Bilingual Education: Training Development and Improvement Program

**AGENCY:** Department of Education.

**ACTION:** Notice of proposed priority for fiscal year 1991.

**SUMMARY:** The Secretary proposes a priority for fiscal year (FY) 1992 under the Bilingual Education: Training Development and Improvement Program. The Secretary takes this action to focus Federal financial assistance on an identified national need. The priority is intended to increase the availability and improve the quality of training in bilingual education at institutions of higher education.

**DATES:** Comments must be received on or before August 19, 1991.

**ADDRESSES:** All comments concerning this proposed priority should be addressed to Cynthia J. Ryan, U.S. Department of Education, 400 Maryland Avenue SW., room 5086, Switzer Building, Washington, DC 20202-6642.

**FOR FURTHER INFORMATION CONTACT:** Cynthia J. Ryan. Telephone: (202) 732-1842. Deaf and hearing impaired individuals may call the Federal Dual Party Relay Service at 1-800-877-8339 (in the Washington, DC 202 area code, telephone 708-9300) between 8 a.m. and 7 p.m., Eastern time.

**SUPPLEMENTARY INFORMATION:** Awards under the Training Development and Improvement (TDI) Program are made to institutions of higher education (IHEs) to encourage reform, innovation, and improvement in higher education programs related to programs for limited English proficient (LEP) persons. Authority for the TDI Program is found in section 7041 of the Bilingual Education Act (20 U.S.C. 3321).

The Secretary proposes an absolute priority under the TDI Program to address the need for qualified educational personnel for programs for LEP persons. The competition under this priority would be limited to projects to establish training institutes to assist faculty and administrators from other IHEs in establishing and improving programs to prepare educational personnel to participate in programs for LEP persons. The training institutes would focus on: (1) Incorporating principles of bilingual education and multicultural content into regular education curricula; (2) including a variety of instructional practices such as cooperative learning strategies and whole language approaches; (3) improving the skills of regular education faculty in preparing educational personel to participate in programs for LEP persons; and (4) establishing undergraduate and graduate training programs in bilingual education at IHEs that do not have these programs.

The proposed priority involves a shift from past practice in the focus of activities under the TRDI Program. Activities of current TDI projects are designed to develop training programs or improve existing training programs at the grantee institutions. Under the proposed priority, a project would be required to provide training institutes for personnel from IHEs located both within the State served by the project and in other States. The intended effect of this requirement is to disseminate information on effective practices in incorporating multicultural content into regular education curricula and in training bilingual teachers. The Department is interested in disseminating any materials on effective practices that may be produced by the training institutes.

The Secretary will announce the final priority in a notice in the **Federal Register**. The final priority will be determined by responses to this notice, available funds, and other considerations of the Department. Funding of particular projects depends on the availability of funds, the nature of the final priority, and the quality of the applications received. The publication of this proposed priority does not preclude the Secretary from proposing additional priorities, nor does it limit the Secretary to funding only this priority, subject to meeting applicable rulemaking requirements.

**Note:** This notice of proposed priority does not solicit applications. A notice inviting applications under the competition will be published in the **Federal Register** concurrent with or following publication of the notice of final priority.

### Priority

Under 34 CFR 75.105(c)(3) the Secretary proposes to give an absolute preference to applications that meet the following priority. The Secretary proposes to fund under this competition only applications that meet this absolute priority:

Training institutes that will focus on incorporating principles of bilingual education and multicultural content into regular education curricula, including instructional practices such as cooperative learning strategies and whole language approaches, improving the skills of regular education faculty in preparing educational personnel to participate in programs for limited English proficient persons, and assisting institutions of higher education (IHEs) that do not have bilingual education training programs to establish undergraduate and graduate training programs in bilingual education at their institutions.

The training institutes must be provided by IHEs with experience and expertise in bilingual education training programs and offered to faculty and administrators from IHEs located both within the State served by the project and in other States that have significant populations of limited English proficient students, including States where no institution of higher education has an established training program in bilingual education.

### Intergovernmental Review

This program is subject to the requirements of Executive Order 12372 and the regulations in 34 CFR part 79. The objective of the executive order is

to foster an intergovernmental partnership and a strengthened federalism by relying on processes developed by State and local governments for coordination and review of proposed Federal financial assistance.

In accordance with the order, this document is intended to provide early notification of the Department's specific plans and actions for this program.

**Invitation to Comment**

Interested persons are invited to submit comments and recommendations regarding this proposed priority.

All comments submitted in response to this notice will be available for public inspection, during and after the comment period, in room 5622, Switzer Building, 330 "C" Street SW., Washington, DC, between the hours of 8:30 a.m. and 4 p.m., Monday through Friday of each week except Federal holidays. *Applicable program regulations:* 34 CFR part 573.

*Program Authority:* 20 U.S.C. 3321.

(Catalog of Federal Domestic Assistance Number: 84.003 Bilingual Education: Training Development and Improvement Program)

Dated: July 12, 1991.

**Lamar Alexander,**

*Secretary of Education.*

[FR Doc. 91-17082 Filed 7-17-91; 8:45 am]

BILLING CODE 4000-01-M

## Office of Special Education and Rehabilitative Services

### Intent To Compromise a Claim, Minnesota Department of Education

**AGENCY:** Department of Education.

**ACTION:** Notice of intent to compromise a claim.

**SUMMARY:** The Department intends to compromise a claim against the Minnesota Department of Education now pending before the Office of Administrative Law Judges (OALJ), Docket No. 90-32-R (20 U.S.C. 1234a(j)).

**DATES:** Interested persons may comment on the proposed action by submitting written data, views, or arguments on or before September 3, 1991.

**ADDRESSES:** All comments concerning this notice should be addressed to Mr. Jeffrey B. Rosen, Office of the General Counsel, Department of Education, 400 Maryland Avenue SW., (room 4099, FOB-6), Washington, DC 20202-2242.

**FOR FURTHER INFORMATION CONTACT:** Additional information may be obtained by writing to Mr. Jeffrey B. Rosen.

**SUPPLEMENTARY INFORMATION:** Pursuant to Office of Management and Budget (OMB) Circular A-128, the Office of Inspector General (OIG) of the U.S. Department of Education (ED) conducted an audit of the State of Minnesota for the period July 1, 1986 through December 31, 1987. On May 26, 1989, the OIG issued an audit report (ACN: 05-80311) based on this audit. Among the results included in the audit report were the findings that the Minnesota Department of Education (MDE) did not accurately report its child count of handicapped students, the MDE charged salary costs not supported by time distribution records, and the MDE failed to maintain accounting records sufficient to justify expenditures.

On June 16, 1990, the Assistant Secretary for Special Education and Rehabilitative Services (OSERS) issued a program determination letter (PDL) in which he disallowed a total of $807,926.54 in Federal funds received by the MDE in fiscal year (FY) 1987 under part B of the Education of the Handicapped Act (EHA-B), 20 U.S.C. 1411-1420. A total of $727,453.54 was disallowed based upon the finding that the State did not accurately conduct its child count of handicapped students as required by 34 CFR 300.750-754. The Assistant Secretary determined that 8 students out of a sample of 300 (2.66 percent) were ineligible for the child count. This was projected on a statewide basis to a cost disallowance of $726,791. The remaining $662.54 disallowed was the per pupil EHA-B cost for two students who were in a special program for dropouts that was not replicated throughout the State. Thus, these students were not part of the statewide projection. In addition, $80,473.00 were disallowed based upon the finding that eight MDE employees did not have time distribution records that supported charges to the EHA-B grant in violation of 34 CFR part 74, appendix C, part II, section B, paragraph 10.b.) Also, the MDE has taken the necessay corrective actions to prevent these violations from recurring.

Given these factors, the percentage of the claim to be repaid and the risk and cost of litigating the claim through the appeal process, the Department has determined that it would not be practical or in the public interest to continue this proceeding. Therefore, the Department proposes to compromise the full amount of the $82,791.89 claim for $27,250.

The public is invited to comment on the Department's intent to compromise this claim. Additional information may be obtained by writing to Mr. Jeffrey B. Rosen at the address given at the beginning of this notice.

Authority: 20 U.S.C. 1234a(j) (1990).

Dated: July 11, 1991.

**Gary J. Rasmussen,**

*Acting Deputy Under Secretary for Management.*

[FR Doc. 91-17069 Filed 7-17-91; 8:45 am]

BILLING CODE 4000-01-M

### Intent To Compromise a Claim, West Virginia Department of Education

**AGENCY:** Department of Education.

**ACTION:** Notice of intent to compromise a claim.

**SUMMARY:** The Department intends to compromise a claim against the West Virginia Department of Education now pending before the Office of Administrative Law Judges (OALJ), Docket No. 90-80-R (20 U.S.C. 1234a(j)).

**DATES:** Interested persons may comment on the proposed action by submitting written data, views, or arguments on or before September 3, 1991.

**ADDRESSES:** All comments concerning this notice should be addressed to Mr. Jeffrey B. Rosen, Office of the General Counsel, Department of Education, 400 Maryland Avenue SW., (room 4099, FOB-6), Washington, DC 20202-2242.

**FOR FURTHER INFORMATION CONTACT:** Additional information may be obtained by writing to Mr. Jeffrey B. Rosen.

**SUPPLEMENTARY INFORMATION:** Pursuant to Office of Management and Budget (OMB) Circular A-128, the Office of Inspector General (OIG) of the U.S. Department of Education (ED) conducted an audit of the Harrison County School District (HCSD) for the period July 1, 1983 to June 30, 1987. On February 26, 1990, the OIG issued an audit report (ACN: 03-80302) based on this audit. Among the five audit findings included in the audit report were the following three findings for which the OIG recommended recovery of funds: the HCSD did not have an adequate accounting system to support financial obligations and expenditures, the HCSD supplanted salary costs for bus aides, and the HCSD improperly computed or inadequately documented staff benefit costs.

On September 30, 1990, the Assistant Secretary for Special Education and Rehabilitative Services (OSERS) issued a program determination letter (PDL) in which he disallowed a total of $340,622.96 in Federal funds received by the WVDE in fiscal years (FY) 1984 through 1987 under part B of the Education of the Handicapped Act (EHA-B), 20 U.S.C. 1411-1420. The Assistant Secretary recommended a

cost disallowance for three of the audit findings.

In Audit Finding #1, a total of $183,668.62 was disallowed because the HCSD did not adequately support numerous financial obligations and expenditures throughout the fiscal years in question in violation of 34 CFR part 74, subpart H. A total of $134,126.00 was disallowed in Audit Finding #3 because, in violation of 34 CFR 300.230(b)(2), the HCSD paid for bus aides with EHA-B funds in fiscal year 1987 although in prior years the bus aides had been paid by State funds. A total of $22,828.34 was disallowed in Audit Finding #4 because the HCSD had not justified staff benefits, including teacher retirement, social security, worker's compensation, unemployment compensation, health and accident insurance, and dental insurance. This was in violation of 34 CFR part 74, appendix C, part I A.2a.

On October 22, 1990, the WVDE filed a timely application for review with the Office of Administrative Law Judges (OALJ). Subsequent to the filing of its appeal, the WVDE submitted additional documentation to OSERS in order to rebut the findings. In addition, there was a meeting on February 12, 1991 with members of the WVDE, the HCSD, the OIG, OSERS, and the Office of the General Counsel.

On April 15, 1991, the Assistant Secretary for OSERS filed a Notice of Reduction of Claim with the OALJ in which he determined that salaries for two employees in fiscal year 1987, totalling $5,750.89 were acceptable. Based upon the foregoing, the Assistant Secretary agreed that the claim should be reduced to $334,872.07.

The parties have agreed that it is fair and reasonable for the WVDE to return $141,782 to the Department of Education in full settlement of this PDL. Also, the WVDE has taken the necessary corrective actions to prevent these violations from recurring.

With respect to Audit Finding #1—a $183,668.62 cost disallowance—the documentation indicates that the WVDE has justified substantial amounts of the $125,000 of salary expenditures claimed for fiscal year (FY) 1986 and of the $15,021 of special education summer school expenditures claimed for FY 1987. The WVDE has agreed to pay back $99,656 for this audit finding, including $56,008 for these two claims and the entire $43,648 for all of the remaining claims in this audit finding for which no additional information was submitted.

In Audit Finding #3—a $134,126 cost disallowance—the Assistant Secretary determined that the WVDE had used EHA-B funds to supplant State funds for bus aides during FY 1987. However, the evidence indicates that, during prior fiscal years, the HCSD had used EHA-B funds for teacher aides and State funds for bus aides and, during the fiscal year in question, used State funds for these teacher aides. Additionally, the State costs and EHA-B costs incurred by the HCSD for both teacher and bus aides remained approximately the same during FY 1987. The WVDE has agreed to repay $26,825 in full settlement of this finding.

In Audit Finding #4—a $22,828.34 cost disallowance—the Assistant Secretary determined that the HCSD had not justified staff benefits for those employees whose salaries were listed in Audit Finding #1. Based upon the new documentation, the parties have agreed that a fair and reasonable settlement for this finding is $15,301.

Given these factors, the percentage of the claim to be repaid, and the risk and cost of litigating the claim through the appeal process, the Department has determined that it would not be practical or in the public interest to continue this proceeding. Therefore, the Department proposes to compromise the full amount of the $334,872.07 claim for $141,782.

The public is invited to comment on the Department's intent to compromise this claim. Additional information may be obtained by writing to Mr. Jeffrey B. Rosen at the address given at the beginning of this notice.

Authority: 20 U.S.C. § 1234a(j) (1990).

Dated: July 11, 1991.

**Gary J. Rasmussen,**

*Acting Deputy Under Secretary for Management.*

[FR Doc. 91-17068 Filed 7-17-91; 8:45 am]

BILLING CODE 4000-01-M

## DEPARTMENT OF ENERGY

### Columbia Basin College; Noncompetitive Financial Assistance Award

**AGENCY:** Department of Energy Field Office, Richland (RL).

**ACTION:** Notice of noncompetitive financial assistance award.

**SUMMARY:** The U.S. Department of Energy Field Office, Richland, Washington (RL), provides notice of its intent to award a grant to Columbia Basin College (CBC) in support of the Hazardous Materials Management curriculum. In response to needs articulated by the DOE's environmental restoration and waste management activities at Hanford, CBC has developed a Hazardous Materials Management program to provide a continual flow of new, well-prepared technical staff equipped and able to participate in environmental restoration and waste management. the curriculum has been approved by the appropriate education authorities.

RL has determined that award on a noncompetitive basis is appropriate because funding for the implementation of the curriculum program is necessary to the satisfactory completion of an activity, curriculum development, presently being funded by a grant from the Department of Education, and competition for support to implement the curriculum would have a significant adverse effect on continuity or completion of the activity. DOE's share of funding for the grant is $100,000. Cost sharing proposed by CBC is $72,800.

**FOR FURTHER INFORMATION CONTACT:** Marcia N. Roske, U.S. Department of Energy, Field Office, Richland, P.O. Box 550, Richland, Washington 99352, Telephone: (509) 376-7265.

Dated: July 10, 1991.

**Robert D. Larson,**

*Director, Procurement Division, Field Office, Richland.*

[FR Doc. 91-17130 Filed 7-17-91; 8:45 am]

BILLING CODE 6450-01-M

### D-Q University; Financial Assistance Award (Grant)

**AGENCY:** United States Department of Energy (DOE); San Francisco Operations Office.

**ACTION:** Notice of Intent to award a grant on the basis of noncompetitive financial assistance.

**SUMMARY:** The DOE intends to enter into a three year, cost shared grant with D-Q University to provide comprehensive math and environmental sciences to American Indian youth in grades 9-12. In collaboration with the California State Department of Education's American Indian Education Centers, D-Q University will provide a summer residential Science Camp and Saturday Science days during the academic year. Activities will include hands on laboratory research, guest lectures, and group science projects involving parents. The project is expected to have a three (3) year life including three (3) separately funded one (1) year budget periods. Congress has appropriated $100,000 in FY91 funds for the first year of this effort. DOE support for this work will enhance the public benefits to be derived and DOE knows of no other entity which is conducting or is planning to conduct this activity. Additional funding will be provided for each

respective budget period. Total estimated cost for the project is $571,000 which includes $80,000 awardee cost share and $491,000 Government share. The period of performance is expected to start June 1991 (including authorized preaward costs), and expire three years thereafter.

**FOR FURTHER INFORMATION CONTACT:** Olga R. Perez, Contracting Officer, U.S. Department of Energy, San Francisco Operations Office, 1333 Broadway, Oakland, CA 94612.

Issued in Oakland, CA, June 25, 1991.

**Kathleen M. Day,**

*Contracts Management Division.*

[FR Doc. 91-17131 Filed 7-17-91; 8:45 am]

BILLING CODE 6450-01-M

## Federal Energy Regulatory Commission

**[Docket No. TM91-9-4-000]**

### Granite State Gas Transmission, Inc.; Notice of Proposed Changes in Rates

July 11, 1991

Take notice that on July 3, 1991, Granite State Gas Transmission, Inc. (Granite State), 300 Friberg Parkway, Westborough, Massachusetts 01581 filed the primary and alternate revised tariff sheets listed below in its FERC Gas Tariff, Second Revised Volume No. 1, proposing changes in rates for effectiveness on August 2, 1991:

Second Revised Sheet No. 24A
Alternate Second Revised Sheet No. 24A

According to Granite State, its filing is submitted to track take-or-pay buydown and buyout costs directly billed to it by Algonquin Gas Transmission Company (Algonquin). Granite State further states that, on June 27, 1991, Alonquin filed primary and alternate tariff sheets in Docket No. TM91-9-20-000 to passthrough to its customers take-or-pay costs for which it will be billed by CNG Transmission Corporation (CNG) in CNG's tariff filings in Docket Nos. TM91-5-22-000 and TM91-6-22-000. It is further stated that Granite State's allocated share of the passed through take-or-pay costs are attributable to Granite State's purchases from Algonquin under the latter's Rate Schedule F-2. Such take-or-pay costs, according to Granite State, are allocated directly to its jurisdictional customer, Bay State Gas Company under the Order No. 528 procedures adopted by Algonquin and CNG.

According to Granite State, copies of its filing were served upon its customers and the regulatory commissions of the states of Maine, New Hampshire and Massachusetts.

Any person desiring to be heard or to make any protest with reference to said filing should file a motion to intervene or protest with the Federal Energy Regulatory Commission, 825 North Capitol Street, NE., Washington, DC 20426, in accordance with Rules 211 and 214 of the Commission's Rules of Practice and Procedures (18 CFR 285.211 and 385.214). All such motions or protests should be filed on or before July 18, 1991. Protests will be considered by the Commission in determining the appropriate action to be taken, but will not serve to make protestants parties to the proceeding. Any person wishing to become a party must file a motion to intervene. Copies of this filing are on file with the Commission and are available for public inspection in the public reference room.

**Linwood A. Watson, Jr.,**

*Acting Secretary.*

[FR Doc. 91-17067 Filed 7-17-91; 8:45 am]

BILLING CODE 6717-01-M

## Office of Energy Research

### Special Research Grant Program Notice 91-14; High Performance Computing and Communications

**AGENCY:** Department of Energy (DOE).

**ACTION:** Notice inviting grant applications.

**SUMMARY:** The Scientific Computing Staff of the Office of Energy Research (ER), U.S. Department of Energy (DOE) hereby announces its interest in receiving applications for Special Research Grants in support of the DOE Program which is part of the Federal High Performance Computing and Communications (HPCC) Program. The Federal HPCC Program was announced on February 5, 1991, by Dr. D. Allan Bromley, Director, Office of Science and Technology Policy, as a new five-year initiative in the President's FY 1992 Budget submission to the Congress. It is an eight agency initiative, for which the DOE has an integral and broad program. The primary goals of this new DOE HPCC Program are to extend the U.S. technological leadership in high performance computing and computer communications; to improve U.S. productivity and industrial competitiveness by making high performance computing and network technologies an integral part of the design and production process; and to provide wide dissemination and application of the advances in these technologies to both speed the pace of innovation and serve the national economy, security, and education. This five-year program will approach these goals by (i) supporting research and development to solve important scientific and technical challenges; (ii) reducing the uncertainties in industrial research and development through increased cooperation between government, industry, and universities and by continued use of government and government-funded facilities as a prototype user of early commercial HPCC products; (iii) supporting the underlying research, network, and computational infrastructures on which U.S. high performance computing technology is based; and (iv) supporting the U.S. human resource base to meet the needs of industry, universities, and government.

This notice requests applications for grants to support research in the following major components of the HPCC Program:

(i) High Performance Computing Systems (HPCS)—research to advance the capabilities of future generations of computing systems and to evaluate advanced prototype systems;

(2) Advanced Software Technology and Algorithms—software support for the computational grand challenges by research and development of software tools, components and computational techniques, and by the establishment of High Performance Computing Research Centers (HPCRC);

(3) National Research and Education Network (NREN)—research and development on very high speed digital communications (gigabits) and participation in the Interagency NREN; and

(4) Basic Research and Human Resources—education, training, curriculum development and research participation and training.

Collaborative research among investigators at universities, industrial firms and DOE National Laboratories is encouraged. Advanced software technology and algorithms in support of the DOE energy related computational grand challenges will be emphasized.

**DATES:** The DOE HPCC initiative is a five-year program. To permit timely consideration of awards in Fiscal Year 1992, formal applications submitted in response to this notice must be received by January 7, 1992. Earlier submission is encouraged.

**ADDRESSES:** Formal applications sent by U.S. Mail should be addressed to: U.S. Department of Energy, Office of Energy Research, Division of Acquisition and Assistance Management, ER-64,

Washington, DC 20585, ATTN: Program Notice 91-14. The following address must be used when submitting applications by U.S. Postal Service Express or any commercial mail delivery service, or when handcarried by the applicant: U.S. Department of Energy, Office of Energy Research, Division of Acquisition and Assistance Management, ER-64/GTN, 19901 Germantown Road, Germantown, MD 20874.

**FOR FURTHER INFORMATION CONTACT:** John S. Cavallini, Acting Director of the Scientific Computing Staff, Office of Energy Research, ER-7/GTN, U.S. Department of Energy, Washington, DC 20585, (301) 353-5800.

**SUPPLEMENTARY INFORMATION:** The DOE will participate in all major components of the Federal High Performance Computing and Communications Program. In the area of High Performance Computing Systems, the DOE will be an early customer of small versions of systems with advanced architectures and will evaluate these systems on energy related applications. It should be noted that the primary technology development for HPCS systems of the HPCC Program will be managed and funded by the Defense Advanced Research Projects Agency (DARPA). The DOE will consider cooperative development projects of advanced systems involving its national laboratories, universities, and vendors, especially for integrated systems of very high speed computer and network hardware and efficient software. The DOE will support research and development of algorithms and systems software for the evaluation of the effectiveness of new parallel computing systems.

The DOE Advanced Software Technology and Algorithms effort will include research and development of novel parellel algorithms for grand challenge applications, software tools for early prototypes of 100 gigaflops and teraflops systems, prototype computational science programming environments that meet standards and are transportable, and support for high performance computing research centers to facilitate the transition from research on parallel machines into the applications and the programming environments. The DOE will fund several grand challenge collaborations, initiate a software component and tools program with strong industrial participation, and initiate an applications driven computational research program. The DOE will evaluate proposals and make research awards related to grand challenges in global climate change, molecular biology, human genome research, materials and chemical sciences, combustion research, waste remediation, fusion energy, and other areas within its mission.

The DOE will participate in the cooperative interagency National Research and Education Network. The Energy Science Net (ESNet) will be incorporated into the NREN to provide quality network access to the energy research facilities by research and education communities. It should be noted, however, that broad community access to the NREN will be supported by the National Science Foundation (NSF) through the NREN component of the Federal HPCC Program. ESNet will maintain compatibility and will be upgraded in concert with NREN. Gigabit network support technology will be developed for DOE applications distributed across multiple energy research centers at the national laboratories and universities. Primary coordination and funded for gigabit research in the Federal HPCC Program will be done by DARPA.

The DOE's Basic Research and Human Resources activities will include: stimulating research in computational science, expanding training programs at the national laboratories for high school teachers and college students in computing techniques, initiation of a high school supercomputer access program, and provision of fellowships in computational science with internship at national laboratories.

The DOE HPCC Program is further described in a Report "High Performance Computing and Communications" February 1991 (DOE/ER-0489P). This report can be requested by calling (301) 353-5800.

**APPLICATION AND AWARD INFORMATION:** Information about submission of applications, eligibility, limitations, evaluation, and selection processes, and other policies and procedures may be found in the Application and Guide for the Special Research Grant Program. The application kit and guide, and copies of 10 CFR part 605 are available from the Office of Energy Research, Scientific Computing Staff, ER-7, Washington, DC 20585. Instructions for preparation of an application are included in the application kit. Telephone requests may be made by calling (301) 353-5800 or FTS 233-5800. The Catalog of Federal Domestic Assistance number for this program is 81.049.

Subject to availability of appropriated FY 1992 funds, approximately $4,000,000 will be available for award. The allocation of funds will depend upon the number and quality of applications received. Grant awards will generally be for a three year period, funded one year at a time. The Project description should not exceed 25 double spaced pages Lengthy appendices are discouraged.

Issued in Washington, DC, on July 9, 1991.

D. D. Mayhew,

*Deputy Director for Management, Office of Energy Research.*

[FR Doc. 91-17132 Filed 7-17-91; 8:45 am]

BILLING CODE 6450-01-M

## ENVIRONMENTAL PROTECTION AGENCY

[FRC-3975-2]

### Drinking Water; Underground Injection Control Violations, Amoco Oil Co. et al.

**AGENCY:** Environmental Protection Agency.

**ACTION:** Notice.

**SUMMARY:** Notice is hereby given that the Environmental Protection Agency (EPA) is proposing to issue Administrative Orders (AOs) on Consent with penalties under authority of section 1423(c)(1) of the Safe Drinking Water Act (SDWA), 42 U.S.C. 300h-2(c)(1), to the following companies for violating the Underground Injection Control (UIC) regulations found at 40 CFR 144.11, 144.12 and 144.26:

Amoco Oil Company, Chicago, IL, and Omega Oil Company, Dayton, OH;
Ashland Oil, Inc., Ashland, KY;
BP Oil Company, Cleveland, OH;
Exxon Corporation, Houston, TX;
Marathon Oil Company, Houston, TX;
Mobil Corporation, Fairfax, VA;
Shell Oil Company, Houston, TX;
Sun Refining and Marketing Company, Philadelphia, PA;
Texaco Refining and Marketing, Inc., Houston, TX;
Union Oil Company of California and Unocal Corporation, Los Angeles, CA.

The proposed AOs are based on violations of the Safe Drinking Water Act and require the cessation of injection into certain Class V [1] injection wells at company owned or operated facilities across the nation. As conditions of the proposed AOs, the companies will certify that cessation of

[1] Class V injection wells are defined in 40 CFR 144.6(e) and are generally shallow wells which inject nonhazardous fluids into or above an underground source of drinking water.

injection occurred on or before March 28, 1991, that waste minimization practices have been implemented, and that closure of all the injection wells will be accomplished by December 31, 1993. The proposed AOs are national in scope and cover company facilities in States [2] where EPA directly implements the Underground Injection Control (UIC) program and where the States have been delegated primary enforcement authority for the UIC program. The respondents, by consenting to the proposed AOs, waive their rights to a hearing pursuant to section 1423(c)(3)(A) of the SDWA, 42 U.S.C. 300h-2(c)(3)(A), and to appeal the AOs pursuant to section 1423(c)(6) of the SDWA, 42 U.S.C. 300h-2(c)(6). EPA solicits written comment on the terms and conditions of the proposed AOs.

**DATES:** This notice is effective July 18, 1991, and comments will be accepted until August 19, 1991.

**ADDRESSES:** All written comments on the proposed AOs shall be submitted to: Environmental Protection Agency, Office of Ground Water and Drinking Water (WH-550), 401 M Street, SW., Washington, DC 20460, attn: Donald M. Olson. Copies of the proposed AOs are available for public inspection at the above address in room E1140 between 8:30 a.m. and 4 p.m.

**FOR FURTHER INFORMATION CONTACT:** Donald M. Olson, Chief of the UIC Compliance and Enforcement Section at the address given above; telephone 202-382-5530.

**SUPPLEMENTARY INFORMATION:** The AOs which are being proposed today by EPA cover automotive service station Class V injection wells located at company owned or operated facilities in States where EPA directly implements the UIC program and in States where the States implement the UIC program. The companies neither admit nor deny the findings of violations. The violations resulted from the discharge or spillage of fluids containing contaminants associated with the servicing of automobiles into sinks and floor drains that were connected to dry wells, septic tank drain fields and/or cesspools. These Class V injection wells, commonly known as "5 × 28 injection wells," allowed the discharge of contaminated fluids directly above or into an underground source of drinking water (USDW). A USDW is any aquifer or its portion that contain fluids with less than 10,000 mg/1 total dissolved solids and either currently supplies drinking water for human consumption or contains a sufficient quantity of ground water to supply a public water system. The operation of an injection well that allows the movement of fluid containing any contaminant into a USDW, if the presence of that contaminant may cause a violation of any primary drinking water regulation or may otherwise adversely affect the health of persons, is a violation of 40 CFR 144.12(a). The violations occurred at various times from the effective date of the UIC programs in the various States through March 28 1991.

[2] State means one of the States of the United States, the District of Columbia, the Commonwealth of Puerto Rico, the Virgin Islands, Guam, American Samoa, the Trust Territory of the Pacific Islands, the Commonwealth of the Northern Mariana Islands, or an Indian Tribe treated as a State.

**Settlement Conditions**

The companies have agreed to achieve full compliance with the applicable UIC regulations. The terms and conditions of the proposed AOs require the ten listed companies to:

(1) Supply detailed inventory information on each facility with a 5 × 28 injection well;

(2) Cease injection into all 5 × 28 Class V injection wells at facilities covered by the AO on later than March 28, 1991;

(3) Begin implementation of a Waste Minimization Plan at all facilities covered by the AO that conduct routine vehicular repair and maintenance operations by March 29, 1991;

(4) Close all 5 × 28 Class V injection wells in accordance with the requirements of a generic closure plan provided by EPA, or alternatively, according to a closure plan approved by EPA, by no later than December 31, 1993;

(5) Contract with a contractor or contractors to witness the closure of no less than ten percent of the companies' wells;

(6) Pay an administrative penalty based on the estimated number of wells included in the AO up to a statutory maximum of $125,000;

(7) Pay stipulated penalties in the event that the company violates any condition set forth in the AO;

(8) Provide EPA with quarterly progress reports on implementation of the AO's conditions;

(9) Distribute a copy of EPA's Automotive Service Waste pamphlet to each customer to whom they supply petroleum products; and

(10) Certify, by no later than March 1, 1994, that all requirements of the AO have been complied with in their entirety.

**Inventory Not Fully Defined**

The exact number of 5 X 28 Class V wells owned or operated by each company and covered under the proposed AOs is not known to EPA at this time, but is estimated to be over 1,800 wells. During EPA's extensive negotiations with the companies it became evident that the companies did not, in fact, know the exact number of facilities with 5 X 28 Class V injection wells which would be covered under the terms of the proposed AOs. To obtain this information, each company agreed to follow a generic protocol in examining its internal records and conduct on-site studies as necessary to fully identify all drain lines which received automotive service related waste and were not connected to a public sewer system or holding tank. Detailed inventory information on each facility identified as having a 5 X 28 Class V injection well is to be reported to EPA by no later than December 1, 1991. Some of the States listed in the proposed AOs may be deleted from the final AOs based on the detailed inventory information. This information will be shared with the appropriate States listed below.

**Order Effect In Primacy States**

For the proposed AOs to be effective nationally, it was necessary for EPA to notify each approved State of EPA's intention to issue the proposed AOs covering facilities in the State and solicit a response as to whether or not the State intended to initiate its own enforcement action. If the State did not choose to initiate its own action within 30 days of notice from EPA, EPA has the authority under section 1423(c)(1) of the SDWA, 42 U.S.C. 300h-2(c)(1), to take an appropriate enforcement action. With minor exceptions for States in which actions had already been initiated before notice from EPA, the States consented to EPA's action against the ten oil companies.

**Company Specific Information**

The following list identifies the EPA Docket Number for each company which will receive a proposed AO, the States in which the company has identified facilities with potential 5 X 28 Class V wells, whether the applicable UIC pogram is implemented by the State or EPA, and the amount of the proposed civil penalty:

1. Amoco Oil Company, 200 East Randolph Drive, Chicago, IL 60680-0703,

and

Omega Oil Company, 7051 Corporate Way, Dayton, OH 45459.
Proposed Penalty: $125,000.

[Docket No. UIC NAO-91-01]

*States With State-Run Class V UIC Programs:* Connecticut, Florida, Georgia, Illinois, Maryland, Missouri, Nebraska, New Jersey, North Carolina, North Dakota, Ohio, and South Carolina.

*States With EPA-Run Class V UIC Programs:* Indiana, Iowa, Michigan, New York, and Tennessee.

2. Ashland Oil, Inc., P.O. Box 391, Ashland, KY.
Proposed Penalty: $32,320.

[Docket No. UIC NAO-91-02]

*States With State-Run Class V UIC Programs:* Florida, Illinois, Missouri, North Dakota, Ohio, Washington, West Virginia, Wisconsin, and Wyoming.

*States With EPA-Run Class V UIC Programs:* Indiana, Iowa, Kentucky, Michigan, Minnesota, Montana, Pennsylvania, South Dakota, and Virginia.

3. BP Oil Company, 200 Public Square, Cleveland, OH 44114-2375.
Proposed Penalty: $73,873.

[Docket No. UIC NAO-91-03]

*States With State-Run Class V UIC Programs:* Arkansas, Florida, Georgia, North Carolina, Ohio, Oregon, and Washington.

*States With EPA-Run Class V UIC Programs:* California, Pennsylvania, and Tennessee.

4. Exxon Corporation, 225 East John W. Carpenter Freeway, Irving, TX 75062.
Proposed Penalty: $125,000.

[Docket No. UIC NAO-91-04]

*States With State-Run Class V UIC Programs:* Alabama, Arkansas, Connecticut, Delaware, Florida, Georgia, Louisiana, Maine, Maryland, Massachusetts, Mississippi, Nevada, New Hampshire, New Jersey, New Mexico, North Carolina, Rhode Island, South Carolina, Texas, Washington, and West Virginia.

*States With EPA-Run Class V UIC Programs:* Arizona, California, New York, Pennsylvania, Tennessee, and Virginia.

5. Marathon Oil Company, P.O. Box 3128, Houston, TX 77253.
Proposed Penalty: $36,937.

[Docket No. UIC NAO-91-05]

*States With State-Run Class V UIC Programs:* Illinois and Ohio.

*States With EPA-Run Class V UIC Programs:* Indiana, Kentucky, and Michigan.

6. Mobil Oil Corporation, 3225 Gallows Road, Fairfax, VA 22037-0001.
Proposed Penalty: $125,000.

[Docket No. UIC NAO-91-06]

*States With State-Run Class V UIC Programs:* Connecticut, Delaware, Florida, Guam, Illinois, Louisiana, Maine, Maryland, Massachusetts, Missouri, New Hampsire, New Jersey, Rhode Island, and Vermont.

*States With EPA-Run Class V UIC Programs:* Arizona, California, Michigan, New York, Pennsylvania, and Virginia.

7. Shell Oil Company, One Shell Plaza, Houston, TX 77252.
Proposed Penalty: $55,909.

[Docket No. UIC NAO-91-07]

*States With State-Run Class V UIC Programs:* None.

*States With EPA-Run Class V UIC Programs:* New York.

8. Sun Refining and Marketing Company, Ten Penn Center, 1801 Market Street, Philadelphia, PA 19103-1699.
Proposed Penalty: $125,000.

[Docket No. UIC NAO-91-08]

*States With State-Run Class V UIC Programs:* Connecticut, Delaware, Maine, Maryland, Massachusetts, New Hampshire, New Jersey, Ohio, Rhode Island, Vermont, and West Virginia.

*States With EPA-Run Class V UIC Programs:* Michigan, New York, Pennsylvania, Virginia, and the District of Columbia.

9. Texaco Refining and Marketing Inc., 1111 Bagby, Houston, TX 77002.
Proposed Penalty: $28,368.

[Docket No. UIC NAO-91-09]

*States With State-Run Class V UIC Programs:* Arkansas, Kansas, Missouri, Nebraska, Nevada, New Mexico, Oklahoma, Oregon, Texas, and Washington.

*States With EPA-Run Class V UIC Programs:* Alaska, Arizona, California, Colorado, and Hawaii.

10. Union Oil Company of California and Unocal Corporation, 1201 West 5th Street, Los Angeles, CA 90017.
Proposed Penalty: $111,354.

[Docket No. UIC NAO-91-10]

*States With State-Run Class V UIC Programs:* Oregon, Washington, and Wisconsin.

*States With EPA-Run Class V UIC Programs:* Alaska, Arizona, California, and Hawaii.

**Administrative Record Location**

The administrative record for the proposed AOs is maintained in room 1140, East Tower, at EPA's Washington Headquarters. All comments received in response to this notice will be incorporated and made part of the administrative record.

**Final Order Issuance and Appeal**

After considering all comments received and the requirements and policies in the SDWA and UIC regulations, EPA will make final determinations regarding the issuance of these AOs. If the final determinations are substantially unchanged from the tentative determinations outlined above, the Office of Ground Water and Drinking Water will promptly issue the AOs on Consent. If the final determinations are substantially changed, EPA will attempt to obtain the companies' consent to the changes and then issue the AOs on Consent. In the alternative, EPA may take such other enforcement action as is deemed appropriate.

Within thirty (30) days after EPA issues an AO, any person who commented on the proposed AO may file an appeal of the AO in the appropriate United States District Court, under section 1423(c)(6) of the SDWA, 42 U.S.C. 300h-2(c)(6). Unless an appeal is filed, an AO becomes effective thirty (30) days following its issuance. The companies have waived their rights to a hearing pursuant to section 1423(c)(3)(A) of the SDWA, 42 U.S.C. 300h-2(c)(3)(A), and to appeal these AOs pursuant to section 1423(c)(6) of the SDWA, 42 U.S.C. 300h-2(c)(6).

**James R. Elder,**
*Director, Office of Ground Water and Drinking Water.*

[FR Doc. 91-17121 Filed 7-17-91; 8:45 am]
BILLING CODE 6560-50-M

---

[FRL-3976-1]

## Pollution Prevention Education Committee of the National Advisory Council for Environmental Policy and Technology; Open Meeting on July 30, 1991.

Under Public Law 925-63 (The Federal Advisory Council Committee Act), EPA gives notice of a fact finding meeting of the Focus Group on Industry Working Group of the Pollution Prevention Education Committee (PPEC). The PPEC is a standing committee of the National Advisory Council for Environmental Policy and Technology (NACEPT), an advisory to the Administrator of the EPA. The first meeting of the Industry Working Group of the PPEC will be a fact finding meeting held on July 30, 1991 from 9 a.m. to 5 p.m. at AT&T, 1120 M St., NW., Washington, DC 20036.

The Industry Working Group strategy is to promote the pollution prevention ethic in industry through industry-industry, industry-EPA and industry-

academia dialogue. Individuals from the groups and others from industry will work with EPA officials to get a handle on baseline pollution prevention data as it pertains to industry. Then, representatives of different industry sectors will be brought in to help draft targeted strategies. Next, a series of meetings with different industry constituencies will be conducted in order to further a pollution prevention partnership between EPA and industry. NACEPT would be a facilitator in this process and allow both sides open communication outside of a regulatory framework. Ultimately, the group hopes to assist industry in developing a pollution prevention ethic which they can accept and a general consensus on what sorts of pollution prevention solutions are both feasible and desirable.

The second section of the strategy deals with tools for industry pollution prevention. An EPA clearinghouse for business already operates, providing regulatory information, relevant contacts and bulletin boards. It is a great infrastructural tool, yet it is unclear how much it is being used, or whether it is suitable for use by small business. A separate subgroup will investigate the clearinghouse and report back to the Committee. Twenty or more state technical assistance programs may be helpful for the Committee's work, especially concerning small businesses, and another subgroup will check them out and share their findings. Finally, since consultancies provide extensive training and advice in areas like pollution preention, the group is considering ways in which EPA might be able to reach consultants as an indirect means of training their industry and business clients.

Members of the public interested in further information may contact Peter Voigt, EPA (A-101 F6), room 115,499 South Capitol St., SW., Washington, DC 20460; (202) 245-3888.

**Robert Hardaker,**

*Acting Director NACEPT Designated Federal Official.*

[FR Doc. 91-17234 Filed 7-17-91; 8:45 am]

BILLING CODE 6560-50-M

---

(FRL-3976-2)

## Technology Innovation and Economics Committee of the National Advisory Council for Environmental Policy and Technology (NACEPT); Open Meeting on July 29-July 30, 1991.

Under Public Law 92-463 (The Federal Advisory Committee Act), EPA gives notice of the second meeting of the Diffusion Focus Group of the Technology Innovation and Economics (TIE) Committee. The TIE Committee is a standing committee of the National Advisory Council for Environmental Policy and Technology (NACEPT), an advisory committee to the Administrator of the EPA. The TIE Committee and NACEPT are seeking ways to encourage the diffusion of environmental technology. The meeting will convene July 29, from 12 noon to 5 p.m. and July 30 from 8 a.m. to 5 p.m. at the Andrew W. Breidenbach Environmental Research Center/ORD, 26 West Martin Luther King Drive, Cincinnati, OH 45268.

The Diffusion Focus Group is examining current EPA practices, other government agency practices, and those of the private sector in the transfer of technology and information. The Focus Group will attempt to determine the barriers to the diffusion of environmental technologies and what EPA can do to address these barriers. This meeting of the Diffusion Focus Group will also specifically address EPA's role in diffusion of non-EPA originated environmental technology. In the future, the Focus Group will address the differences between the diffusion of pollution prevention and pollution control technology and how domestic and international diffusion differ.

The July 29-30 meeting will be open to the public. Written comments will be received and reviewed by the Focus Group. Additional information may be obtained from David R. Berg or Morris Altschuler at the above address, by calling 202-382-3153, or by written request sent by fax 202-245-3882.

Dated: July 15, 1991.

**Robert Hardaker,**

*NACEPT Designated Federal Official.*

[FR Doc. 91-17235 Filed 7-18-91; 8:45 am]

BILLING CODE 6560-50-M

---

# FEDERAL COMMUNICATIONS COMMISSION

[DA 91-866]

## Arizona Public Safety Plan

**AGENCY:** Federal Communications Commission.

**ACTION:** Notice; extension of time.

**SUMMARY:** In response to a Motion for Extension of Time filed by the American Private Radio Association, the Commission adopted an Order extending the time period in which to file comments and reply comments in this proceeding, 56 FR 23707, May 23, 1991. The intended effect of this action is to give all interested parties additional time to file comments and reply comments.

**DATES:** Comments are due July 30, 1991 and reply comments are due August 14, 1991.

**ADDRESSES:** Federal Communications Commission, Washington, DC 20554.

**FOR FURTHER INFORMATION CONTACT:** Betty Woolford, Private Radio Bureau, Policy and Planning Branch, (202) 632-6497.

**SUPPLEMENTARY INFORMATION:**

[PR Docket No. 91-143]

### Order Extending Comment Period

Adopted: July 5, 1991.

Released: July 10, 1991.

By the Chief, Private Radio Bureau:

1. On May 16, 1991, the regional public safety plan for Arizona (Region 3) was placed on Public Notice. The specified deadlines for comments and reply comments were June 25, 1991 and July 10, 1991, respectively.

2. On June 24, 1991, the American Private Radio Association (APRA) filed a motion requesting an extension of the deadlines for comments and reply comments by approximately 30 days. APRA stated that the plan was unavailable for inspection and could not be obtained by the Downtown Copy Center.

3. The Arizona plan has been available from the Commission's Public Reference Room in Washington, D.C. since the Public Notice was released on May 16, 1991. However, to afford interested parties a full opportunity to participate in this proceeding we will extend the due dates of all comments and reply comments.

4. Accordingly, *It is ordered,* pursuant to the authority set forth in § 0.331 of the Commission's Rules and Regulations, that all interested parties will have until July 30, 1991 to file comments and until August 14, 1991 to file reply comments.

Federal Communications Commission.

**Ralph A. Haller,**

*Chief, Private Radio Bureau.*

[FR Doc. 91-17101 Filed 7-17-91; 8:45 am]

BILLING CODE 6712-01-M

---

# FEDERAL MARITIME COMMISSION

## Agreement(s) Filed; Ocean Highway and Port Authority, Nassau Co., et al.

The Federal Maritime Commission hereby gives notice of the filing of the following agreement(s) pursuant to section 5 of the Shipping Act of 1984.

Interested parties may inspect and obtain a copy of each agreement at the

Washington, DC Office of the Federal Maritime Commission, 1100 L Street, NW., room 10220. Interested parties may submit comments on each agreement to the Secretary, Federal Maritime Commission, Washington, DC 20573, within 10 days after the date of the Federal Register in which this notice appears. The requirements for comments are found in § 572.603 of title 46 of the Code of Federal Regulations. Interested persons should consult this section before communicating with the Commission regarding a pending agreement.

*Agreement No.:* 224-010918-001-A, 224-010918-001-B, 224-010918-001-C and 224-010918-001-D.

*Title:* Ocean Highway and Port Authority Nassau County, Fernandina Marine Management, Inc., Nassau Terminals, Van Ommeren Port Terminal South Atlantic, Inc. Terminal Agreement.

*Parties:*

Ocean Highway and Port Authority Nassau County ("Authority")
Fernandina Marine Management, Inc. ("FMM")
Nassau Terminals ("NT")
Van Ommeren Port Terminal South Atlantic, Inc. ("VOPT").

*Synopsis:* The Agreements, filed July 11, 1991, amend the parties' operating contract ("Contract") at the Port of Fernandina, Florida. Agreement No. 224-010918-001-A names FMM as the new terminal operator under the "Contract". It also specifies that: the Authority will provide container and general-purpose cranes; FMM will procure all other service equipment, will collect revenues and pay the Authority a certain portion of such revenues. Agreement No. 224-010918-001-B provides for the Port's consent to: FMM's assignment of 50% of its interest in the Contract to VOPT; a general partnership between FMM and VOPT; and assignment of the partnership's interest in the Contract to NT. Agreement No. 224-010918-001-C provides for NT and FMM's assignment of the Contract to VOPT (the Authority approved this assignment to VOPT). Agreement No. 224-010918-001-D reflects the change of VOPT's name to Nassau Terminals, Inc. ("Nassau") and provides for: certain increases in the annual fee paid by Nassau; assessing Nassau with an "equipment warehouse and facilities use fee"; deleting "storage" as a Port Authority revenue; and describing Nassau's responsibilities in the repair and maintenance of equipment and facilities and use of the Authority's equipment and facilities.

Dated: July 15, 1991.

By Order of the Federal Maritime Commission.

**Joseph C. Polking,**

*Secretary.*

[FR Doc. 91-17113 Filed 7-17-91; 8:45 am]

BILLING CODE 6730-01-M

## Agreement(s) Filed; Port of Oakland, et al.

The Federal Maritime Commission hereby gives notice of the filing of the following agreement(s) pursuant to section 5 of the Shipping Act of 1984.

Interested parties may inspect and obtain a copy of each agreement at the Washington, DC Office of the Federal Maritime Commission, 1100 L Street, NW., room 10220. Interested parties may submit comments on each agreement to the Secretary, Federal Maritime Commission, Washington, DC 20573, within 10 days after the date of the Federal Register in which this notice appears. The requirements for comments are found in § 572.603 of title 46 of the Code of Federal Regulations. Interested persons should consult this section before communicating with the Commission regarding a pending agreement.

*Agreement No.:* 224-200087-004.

*Title:* Port of Oakland/Maersk Pacific, Ltd. Terminal Agreement.

*Parties:*

Port of Oakland
Maersk Pacific, Ltd. (Maersk).

*Synopsis:* The Agreement, filed July 8, 1991, provides for reimbursement to Maersk for the cost of an above-ground truck scale on premises assigned under the basic agreement.

*Agreement No.:* 224-200544.

*Title:* Port Everglades Authority/Discovery Cruises, Inc., Terminal Agreement.

*Parties:*

Port Everglades Authority (Authority)
Discovery Cruises, Inc. (Discovery).

*Synopsis:* The Agreement, filed July 8, 1991, provides for: (1) The Authority to furnish Discovery with berthing and terminal facilities at discounted wharfage charges for the operation of its daily cruise business; and, (2) Discovery to pay the Authority a minimum guaranteed passenger wharfage. The term of the Agreement is for two years.

*Agreement No.:* 224-200545.

*Title:* Tampa Port Authority/Tampa Bay Shipping Marine Terminal Agreement.

*Parties:*

Tampa Port Authority (Port)
Tampa Bay Shipping (Tampa Bay).

*Synopsis:* The Agreement, filed July 9, 1991, provides for Tampa Bay to lease from the Port certain lots and parcels of land (approximately 2,100 sq. ft.) situated in Hillsborough County, Florida. The term of the lease shall be month-to-month and Tampa Bay shall pay an advance monthly rent of $300.00.

Dated: July 12, 1991.

By the Federal Maritime Commission.

**Joseph C. Polking,**

*Secretary.*

[FR Doc. 91-17054 Filed 7-17-91; 8:45 am]

BILLING CODE 6730-01-M

## Security for the Protection of the Public Financial Responsibility To Meet Liability Incurred for Death or Injury to Passengers or Other Persons on Voyages; Issuance of Certificate (Casualty)

Notice is hereby given that the following have been issued a Certificate of Financial Responsibility to Meet Liability Incurred for Death or Injury to Passengers or Other Persons on Voyages pursuant to the provisions of section 2, Public Law 89-777 (46 U.S.C. 817(d)) and the Federal Maritime Commission's implementing regulations at 46 CFR part 540, as amended: Princess Cruise Lines Inc. and Astramar S.P.A., 10100 Santa Monica Blvd., Los Angeles, CA 90067-4189. Vessel: Regal Princess.

Dated: July 12, 1991.

**Joseph C. Polking,**

*Secretary.*

[FR Doc. 91-17078 Filed 7-17-91; 8:45 am]

BILLING CODE 6730-01-M

## Ocean Freight Forwarder License; Reissuance of License

Notice is hereby given that the following ocean freight forwarder license has been reissued by the Federal Maritime Commision pursuant to section 19 of the Shipping Act of 1984 (46 U.S.C. app. 1718) and the regulations of the Commission pertaining to the licensing of ocean freight forwarders, 46 CFR part 510.

| License No. | Name/Address | Date reissued |
|---|---|---|
| 2849-R..... | Amex International, Inc., 1725 K Street, NW., #402, Washington, DC 20006. | June 27, 1991. |

**Bryant L. VanBrakle,**
*Acting Director, Bureau of Domestic Regulation.*
[FR Doc. 17080 Filed 7-17-91; 8:45 am]
BILLING CODE 6730-01-M

## Ocean Freight Forwarder License; Revocations

Notice is hereby given that the following ocean freight forwarder licenses have been revoked by the Federal Maritime Commission pursuant to section 19 of the Shipping Act of 1984 (46 U.S.C. app. 1718) and the regulations of the Commission pertaining to the licensing of ocean freight forwarders, 46 CFR Part 510.

License Number: 3199
Name: Morgan and Brother Manhattan Storage Co., Inc.
Address: 11411 Third Ave., New York, NY 10028
Date Revoked: June 15, 1991
Reason: Failed to furnish a valid surety bond.

License Number: 3198
Name: Monarch Customs Brokers & Forwarders, Inc.
Address: 5 Beekman Street, New York, NY 10038
Date Revoked: June 21, 1991
Reason: Failed to furnish a valid surety bond.

License Number: 3311
Name: La Mar Line Corporation
Address: 112th Avenue, Miami, FL 33172
Date Revoked: June 27, 1991
Reason: Surrendered license voluntarily.

License Number: 2879
Name: Coleman International, Inc.
Address: #16 The Kroger Center, Suite 100, Norfolk, VA 23502
Date Revoked: June 27, 1991
Reason: Surrendered license voluntarily.

License Number: 1210R
Name: E. L. Vanderberry Co., Inc.
Address: P.O. Box 3295, Norfolk, VA 23514
Date Revoked: June 27, 1991
Reason: Surrendered license voluntarily.

License Number: 510
Name: The Gallie Corporation
Address: 17 Battery Place, New York, NY 10004
Date Revoked: June 30, 1991
Reason: Surrendered license voluntarily.

**Bryant L. VanBrakle,**
*Acting Director, Bureau of Domestic Regulation.*
[FR Doc. 91-17079 Filed 7-17-91; 8:45 am]
BILLING CODE 6730-01-M

# FEDERAL RESERVE SYSTEM

## Firstar Corporation, et al.; Formations of; Acquisitions by; and Mergers of Bank Holding Companies

The companies listed in this notice have applied for the Board's approval under section 3 of the Bank Holding Company Act (12 U.S.C. 1842) and § 225.14 of the Board's Regulation Y (12 CFR 225.14) to become a bank holding company or to acquire a bank or bank holding company. The factors that are considered in acting on the applications are set forth in section 3(c) of the Act (12 U.S.C. 1842(c)).

Each application is available for immediate inspection at the Federal Reserve Bank indicated. Once the application has been accepted for processing, it will also be available for inspection at the offices of the Board of Governors. Interested persons may express their views in writing to the Reserve Bank or to the offices of the Board of Governors. Any comment on an application that requests a hearing must include a statement of why a written presentation would not suffice in lieu of a hearing, identifying specifically any questions of fact that are in dispute and summarizing the evidence that would be presented at a hearing.

Unless otherwise noted, comments regarding each of these applications must be received not later than August 6, 1991.

**A. Federal Reserve Bank of Chicago** (David S. Epstein, Vice President) 230 South LaSalle Street, Chicago, Illinois 60690:

*1. Firstar Corporation*, Milwaukee, Wisconsin; to acquire 100 percent of the voting shares of Cumberland Financial Services, Inc., Edina, Minnesota, and thereby indirectly acquire Northwestern State Bank, Cumberland, Wisconsin.

*2. F.W.S.F. Corporation*, Milwaukee, Wisconsin; to acquire 100 percent of the voting shares of Cumberland Financial Services, Inc., Edina, Minnesota, and thereby indirectly acquire Northwestern State Bank, Cumberland, Wisconsin.

Board of Governors of the Federal Reserve System, July 12, 1991.
**Jennifer J. Johnson,**
*Associate Secretary of the Board.*
[FR Doc. 91-17092 Filed 7-17-91; 8:45 am]
BILLING CODE 6210-01-F

## Robert Dunn Glick, et al.; Change in Bank Control Notices; Acquisitions of Shares of Banks or Bank Holding Companies

The notificants listed below have applied under the Change in Bank Control Act (12 U.S.C. 1817(j)) and § 225.41 of the Board's Regulation Y (12 CFR 225.41) to acquire a bank or bank holding company. The factors that are considered in acting on the notices are set forth in paragraph 7 of the Act (12 U.S.C. 1817(j)(7)).

The notices are available for immediate inspection at the Federal Reserve Bank indicated. Once the notices have been accepted for processing, they will also be available for inspection at the offices of the Board of Governors. Interested persons may express their views in writing to the Reserve Bank indicated for that notice or to the offices of the Board of Governors. Comments must be received not later than August 6, 1991.

**A. Federal Reserve Bank of Chicago** (David S. Epstein, Vice President) 230 South LaSalle Street, Chicago, Illinois 60690:

*1. Robert Dunn Glick*, as Trustee; to acquire 94.43 percent of the voting shares of Water Tower Bancorp, Inc., Chicago, Illinois, and thereby indirectly acquire Water Tower Bank, Chicago, Illinois, and Belmont National Bank of Chicago, Chicago, Illinois.

**B. Federal Reserve Bank of Minneapolis** (James M. Lyon, Vice President) 250 Marquette Avenue, Minneapolis, Minnesota 55480:

*1. Mary F. Lindsay*, Omaha, Nebraska; to acquire 32.30 percent of the voting shares of Tri County Investment Company, Pine Island, Minnesota, and thereby indirectly acquire The Security State Bank, Pine Island, Minnesota.

**C. Federal Reserve Bank of Kansas City** (Thomas M. Hoenig, Vice President) 925 Grand Avenue, Kansas City, Missouri 64198:

*1. Harold and Esther Herrman*, LaCrosse, Kansas; to acquire an additional 7.1 percent (totalling 13.9 percent) of the voting shares of NSB Bancshares, Inc., LaCrosse, Kansas, and thereby indirectly acquire Nekoma State Bank, LaCrosse, Kansas.

Board of Governors of the Federal Reserve System, July 12, 1991.
**Jennifer J. Johnson,**
*Associate Secretary of the Board.*
[FR Doc. 91-17093 Filed 7-17-91; 8:45 am]
BILLING CODE 6210-01-F

## Norwest Corporation; Acquisition of Company Engaged in Permissible Nonbanking Activities

The organization listed in this notice has applied under § 225.23(a)(2) or (f) of the Board's Regulation Y (12 CFR 225.23(a)(2) or (f)) for the Board's

approval under section 4(c)(8) of the Bank Holding Company Act (12 U.S.C. 1843(c)(8)) and § 225.21(a) of Regulation Y (12 CFR 225.21(a)) to acquire or control voting securities or assets of a company engaged in a nonbanking activity that is listed in § 225.25 of Regulation Y as closely related to banking and permissible for bank holding companies. Unless otherwise noted, such activities will be conducted throughout the United States.

The application is available for immediate inspection at the Federal Reserve Bank indicated. Once the application has been accepted for processing, it will also be available for inspection at the offices of the Board of Governors. Interested persons may express their views in writing on the question whether consummation of the proposal can "reasonably be expected to produce benefits to the public, such as greater convenience, increased competition, or gains in efficiency, that outweigh possible adverse effects, such as undue concentration of resources, decreased or unfair competition, conflicts of interests, or unsound banking practices." Any request for a hearing on this question must be accompanied by a statement of the reasons a written presentation would not suffice in lieu of a hearing, identifying specifically any questions of fact that are in dispute, summarizing the evidence that would be presented at a hearing, and indicating how the party commenting would be aggrieved by approval of the proposal.

Comments regarding the application must be received at the Reserve Bank indicated or the offices of the Board of Governors not later than August 6, 1991.

**A. Federal Reserve Bank of Minneapolis** (James M. Lyon, Vice President) 250 Marquette Avenue, Minneapolis, Minnesota 55480:

*1. Norwest Corporation*, Minneapolis, Minnesota; to acquire AVCO Financial Services of Madison Heights, Inc. and AVCO Mortgage and Acceptance, Inc., of Irvine, California, and thereby engage in general consumer finance business which includes making and acquiring consumer loans and sale contracts pursuant to § 225.25(b)(1)(i) of the Board's Regulation Y.

Board of Governors of the Federal Reserve System, July 12, 1991.

**Jennifer J. Johnson,**

*Associate Secretary of the Board.*

[FR Doc. 91-17094 Filed 7-17-91; 8:45 am]

BILLING CODE 6210-01-F

## DEPARTMENT OF HEALTH AND HUMAN SERVICES

### Office of the Secretary

### Interest Rate on Overdue Debts

Section 30.13 of the Department of Health and Human Service's claims collection regulations (45 CFR part 30) provides that the Secretary shall charge an annual rate of interest as fixed by the Secretary of the Treasury after taking into consideration private consumer rates of interest prevailing on the date that HHS becomes entitled to recovery. The rate generally cannot be lower than the Department of Treasury's current value of funds rate or the applicable rate determined from the "Schedule of Certified Interest Rates With Range of Maturities." This rate may be revised quarterly by the Secretary of the Treasury and shall be published quarterly by the Department of Health and Human Services in the **Federal Register**.

The Secretary of the Treasury has certified a rate of 15⅛% for the quarter ended June 30, 1991. This interest rate will remain in effect until such time as the Secretary of the Treasury notifies HHS of any change.

Dated: July 11, 1991.

**Dennis Fischer,**

*Deputy Assistant Secretary, Finance.*

[FR Doc. 91-17114 Filed 7-17-91; 8:45 am]

BILLING CODE 4150-04-M

---

### Centers for Disease Control

**[Announcement No. 138]**

### International Laboratory Capacity Development and Training

#### Introduction

The Centers for Disease Control (CDC) announces the availability of funds in Fiscal Year 1991 for a cooperative agreement with the Association of State and Territorial Public Health Laboratory Directors (ASTPHLD) to develop and support training activities for laboratory capacity building in developing public health environments. The Public Health Service (PHS) is committed to achieving the health promotion and disease prevention objectives of Healthy People 2000, a PHS-led national activity to reduce morbidity and mortality and improve the quality of life. This announcement is related to the priority area of Clinical Preventive Services. (For ordering a copy of Healthy People 2000, see Section WHERE TO OBTAIN ADDITIONAL INFORMATION.)

#### Authority

This project is authorized by sections 307(b)(4) and 301 (42 U.S.C. 241) of the Public Health Service Act, as amended (42 U.S.C. 2421(b)(4)).

#### Eligible Applicant

Assistance will be provided only to the Association of State and Territorial Public Health Laboratory Directors (ASTPHLD) for this project. ASTPHLD is an organization representing all public health laboratory officials of each state and Territory. Through its work with the ASTPHLD Training Committee, the Public Health Foundation, other affiliate organizations, and its own membership, ASTPHLD has developed a unique knowledge and understanding of the needs and operations of decentralized, state-based public health laboratory agencies. The relationship between the CDC at the national level and state and local health departments has proven to be an effective and efficient model for use of public health resources, which can be extended into developing country environments. ASTPHLD has established expertise in laboratory training at the state level, and has the breadth and variety of training resources needed to successfully export that knowledge and expertise internationally. As an organization, ASTPHLD has direct and assured access to its own membership of chief public health laboratory officials, and therefore has the unique capacity to meet the objectives of this agreement in a timely and forthright manner.

#### Availability of Funds

It is expected that up to $290,000 will be available during Fiscal Year 1991 to support this cooperative agreement for a 12-month budget period. Continuation awards for a 5-year project period will be made on the basis of satisfactory progress in meeting project objectives and is subject to the availability of funds. The funding estimate outlined above may vary and is subject to change.

#### Purpose

The proposed cooperative agreement is intended to address the need to provide training and technical assistance to developing public health laboratory agencies, and to provide opportunities for the Association to exchange information and ideas with international health organizations, foreign ministries of health and international scientists.

The project will address a variety of issues related to the development of an effective public health laboratory

infrastructure in developing nations. ASTPHLD will provide on-site consultation to foreign ministries of health and to more decentralized (state, provincial, district and local) public health agencies regarding laboratory support to public health activities, and will observe portions of ongoing laboratory training activities overseas.

Foreign nationals from developing countries may take part in training activities conducted by the National Laboratory Training Network. The involvement of individuals from ASTPHLD and foreign nationals working together both in the U.S. and in countries of origin will facilitate an exchange of information regarding research, methodology, information management, and other areas from which both parties could benefit in terms of new ideas and proven methods. ASTPHLD will direct the focus of the training, evaluate the effectiveness, assess country needs and resources, and determine the appropriate level of assistance for a given project country.

**Program Requirements**

In conducting activities to achieve the purpose of this program, the recipient shall be responsible for conducting activities under A. below and CDC will be responsible for conducting activities under B. below.

*A. ASTPHLD Activities*

1. Assess the overall needs and deficiencies related to systems, communications flow, accuracy and appropriateness of test and procedures, and general management of public health laboratories in specific developing countries.

2. Assess the equipment needs, adequacy of existing equipment, and potential for upgrading existing equipment as they relate to conditions within specific countries (e.g. electrical capacity, manpower, availability of technical and physical resources).

3. Develop a set of criteria for assessing training needs based on the education and experience of laboratorians. Develop a plan for training public health laboratorians in developing countries, accounting for various levels of hierarchy and involvement in day-to-day laboratory operations.

4. Work with U.S.-based training centers and state laboratories to accommodate international trainees in both general and specific laboratory practices. Develop an administrative mechanism to provide support to international trainees while the trainees are in the states.

5. Provide technical assistance to laboratories in the developing world.

6. Establish a central point of contact for the dissemination of information regarding laboratory training and capacity strengthening for developing countries, with a system for routine maintenance and updates.

7. Evaluate the effectiveness of training and consultancies in international settings. Build follow-up methodologies into training and capacity development activities.

*B. CDC Activities*

1. Assist in the coordination of interested participants in the project formulation phase of public health laboratory capacity strengthening in developing countries. Provide a forum for communication and contact between interested countries and ASTPHLD.

2. Serve as a collaborator in the design, development, promotion and evaluation of laboratory training activities.

3. Assist in the development of rapport and agreement between ASTPHLD and foreign governments for the provision of technical assistance and training.

4. Collaborate in the formulation of project documentation reguired by participating parties.

5. Collaborate in the evaluation of the training and technical assistance activities, including the tracking of follow-up activities and reports.

6. Collaborate in the identification of new opportunities for public health laboratory capacity development in other countries.

**Evaluation Criteria**

The application will be reviewed and evaluated by the following criteria:

A. Extent to which the applicant understands the reguirements, problems, objectives, complexities, and interactions reguired of this cooperative agreement; (20 Points)

B. Degree to which proposed objectives are clearly stated, realistic, measurable, time-phased, and related to the purpose of this project; (20 Points)

C. Degree to which the applicant provides evidence of an ability to carry out the proposed project and the extent to which the applicant institution documents demonstrated capability to achieve objectives similar to those of this project; (20 Points)

D. Extent to which professional personnel involved in this project are qualified, including evidence of past achievements appropriate to this project; (20 Points) and

E. Adequacy of plans for administering the project. (20 Points)

**Executive Order 12372 Review**

The application is not subject to review as governed by Executive Order 12372, Intergovernmental Review of Federal Programs (45 CFR part 100).

**Catalog of Federal Domestic Assistance Number**

The Catalog of Federal Domestic Assistance Number is 93.283.

**Application Submission and Deadline**

The original and two copies of the application shall be submitted on Form PHS-5161-1 to Henry S. Cassell, III, Grants Management Officer, Centers for Disease Control, Grants Management Branch, 255 East Paces Ferry Road NE., Mail Stop E-14, Atlanta, Georgia 30305, on or before August 19, 1991.

**Where to Obtain Additional Information**

If you are interested in obtaining additional information regarding this project, please refer to Announcement Number 138 and contact the following CDC personnel:

*Business Management Technical Assistance*

Van Malone, Grants Management Specialist, Grants Management Branch, Procurement and Grants Office, Centers for Disease Control, 255 East Paces Ferry Road NE., room 300, Mail Stop E-14, Atlanta, Georgia 30305, or by calling (404) 842-6630 or FTS 236-6630.

*Programmatic Technical Assistance*

Rita Malkki, Program Analyst, International Health Program Office, Centers for Disease Control, 1600 Clifton Road, Mail Stop F-03, Atlanta, Georgia, 30333, or by calling (404) 639-0313 or FTS 236-0313.

A copy of Healthy People 2000 (Full Report, Stock No. 017-001-00474-0) or Healthy People 2000 (Summary Report, Stock No. 017-001-00473-1) referenced in the INTRODUCTION may be obtained through the Superintendent of Documents, Government Printing Office, Washington, DC 20402-9325 (Telephone (202) 783-3238).

Dated: July 12, 1991.

**Robert L. Foster,**

*Acting Director, Office of Program Support, Centers for Disease Control.*

[FR Doc. 91-17084 Filed 7-17-91; 8:45 am]

BILLING CODE 4160-18-M

## Health Resources and Services Administration

## Final Definitions and Evaluation Proposal for HIV/AIDS Dental Reimbursement Program

The Health Resources and Services Administration (HRSA), announces the final definitions and evaluation proposal for fiscal year 1991 for reimbursement of eligible dental schools and postdoctoral dental education programs for the documented, uncompensated costs of oral health care which has been provided to HIV-infected persons during the prior year. This program is authorized under section 788A(f) of the Public Health Service Act (the Act).

### Purpose

This authority requires the Secretary of Health and Human Services to distribute the available funds among all eligible applicants taking into account the number of patients with acquired immune deficiency syndrome (AIDS) or Human Immunodeficiency Virus (HIV) who have been served and the unreimbursed oral health care costs incurred by each institution as compared with the total number of HIV/AIDS patients served and costs incurred by all eligible applicants.

The proposed notice, published in the **Federal Register** on May 9, 1991 contained a typographical error in the narrative which accompanied the formula for allocating funds among eligible applicants. A comment was received noting this error. We have made the correction in the final notice. The same commentor was supportive of the formula design.

The HRSA did not receive any other comments in response to its proposal.

The Secretary will use the following formula to allocate funds among eligible applicants:

$$N = A \left[ .8 \left( \frac{IU}{TU} \right) + .2 \left( \frac{IP}{TP} \right) \right]$$

In this formula, "N" represents the amount to be awarded to a given applicant. "A" represents the amount of funds appropriated to implement section 788A(f) in this fiscal year. "IU" represents the applicant institution's unreimbursed costs. "TU" represent the total unreimbursed costs for all applicants. "IP" represents the number of HIV-infected patients served by the applicant institution. "TP" represents the total number of HIV-infected patients served by all applicants.

Each award will be calculated by multiplying the total appropriation amount times the sum of the weighted proportions of each eligible applicant's unreimbursed costs and number of HIV-infected patients served to the total unreimbursed costs claimed and number of patients served by all eligible applicants, respectively.

The unreimbursed costs portion of this formula is weighted more heavily than the number of HIV/AIDS patients served, reflecting the thrust of this program to alleviate losses incurred in providing such care.

If HIV/AIDS patients were served but there are no documented, uncompensated costs, no reimbursement will be awarded. Documentation referenced in proposals will be subject to audit.

### National Health Objectives for the Year 2000

The Public Health Service (PHS) is committed to achieving the health promotion and disease prevention objectives of Healthy People 2000, a PHS-led national activity for setting priority areas. This HIV/AIDS Dental Reimbursement Program is related to priority area 18, HIV Infection. Potential applicants may obtain a copy of Healthy People 2000 (Full Report; Stock No. 017-001-00474-0) or Healthy People 2000 (Summary Report; Stock No. 017-001-00473-1) through the Superintendent of Documents, Government Printing Office, Washington, DC 20402-9325 (telephone 202 783-3238.)

### Eligibility

The Secretary is authorized to make this assistance available to public or private nonprofit schools of dentistry and to accredited post-graduate dental training programs that have documented the uncompensated costs of oral health care provided to HIV-infected persons. The Secretary shall not make an award under this authority if doing so would result in any reduction in State funding allotted for such purposes.

### Statutory Requirements

*Duration of Assistance*

Each eligible dental school or program may annually submit a proposal documenting the unreimbursed costs of oral health care provided to HIV-infected patients by that school or hospital during the prior year. Reimbursement by the Secretary will be subject to reauthorization of this authority after FY 1991 and the availability of appropriations for the fiscal year involved.

### Final Definitions for Fiscal Year 1991

"Eligible applicant" means a dental school or any post-doctoral dental eduction program which has documented uncompensated costs for the provision of oral health care to HIV-infected persons and which has been accredited by the Commission on Dental Accreditation.

"Fee charged" means the institution's normal charge for a particular service before any discount or sliding fee schedule is applied.

"HIV/AIDS patient" means a person who is infected with the human immunodeficiency virus—those patients who self identify as being HIV-infected or who present with signs, or symptoms, or medical historical data identified with HIV Infection—e.g. candidiasis (oral, esophageal, pulmonary, etc.), progressive generalized lymphadenopathy, oral hairy leukoplakia, Pneumocystis carinii pneumonia (PCP), Kaposi's sarcoma (oral and/or disseminated), and/or other HIV-associated fungal, viral, bacterial, and/or neoplastic processes as delineated by the Centers for Disease Control.

"Post-doctoral dental education program" means a program sponsored by a school of dentistry, hospital, or a public or private institution that offers post-doctoral training in the specialties of dentistry, advanced education in general dentistry, or a dental general practice residency; and has been accredited by the Commission on Dental Accreditation.

"Prior year" is the year for which uncompensated costs will be reimbursed, which for FY 1991 is defined as July 1, 1989–June 30, 1990.

"Scope of services" means those oral health and support services (i.e., laboratory services) which have been provided to the patient (and for which a fee was charged).

"Unreimbursed oral health care costs" means the balance remaining after subtracting the total income received from the HIV/AIDS patients served and/or third party payors or Medicaid, from the total of normal fees charges by the applicant institution for those patients. It refers to the cost of those actual uncompensated oral health services provided through the institution to an HIV-infected person.

### How Proposals Will be Evaluated

The review of proposals will take into consideration compliance with the requirements of sec. 788A(f). In particular, evaluation of proposals will consider:

1. The total number of HIV-infected patients treated through the dental school/program and the percent range of uncompensated costs of their care;

2. Total fees charged for oral health services provided to the HIV-infected patients;

3. The total unreimbursed costs for oral health care provided to HIV-infected patients;

4. The number of HIV-infected patient visits and comparison of this number with the same number of non-HIV-infected patient visits for a control population of equal size;

5. The percentage of oral health service procedures provided to all HIV-infected persons using the following categories: Diagnostic, oral pathology, preventive, restorative periodontics, prosthodontics, oral surgery, endodontics, and other adjunctive services and a comparative percentage of oral health service procedures for the same number of non-HIV-infected patients;

6. Evidence of efforts to establish working relationships with HIV planning councils and care consortia authorized under titles I & II of the Ryan White CARE Act (Pub. L. 101-381); and

7. Indication of ongoing provision of oral health care services to persons with HIV infection.

Requests for additional information regarding the program aspects and business management issues and for proposal instructions should be directed to: Dr. Rosemary Duffy, Dental Health Branch, Division of Associated and Dental Health Professions, Bureau of Health Professions, Health Resources and Services Administration, 5600 Fishers Lane, room 8C-15, Rockville, Maryland 20857, telephone (301) 443-6837.

The Program, HIV/AIDS Dental Reimbursement, is listed at 93.924 in the Catalog of Federal Domestic Assistance. Proposals submitted in response to this announcement are not subject to the provisions of Executive Order 12372, Intergovernmental Review of Federal Programs, (as implemented through 45 CFR part 100).

Dated: July 12, 1991.

**Robert G. Harmon,**

*Administrator.*

[FR Doc. 91-17098 Filed 7-17-91; 8:45 am]

BILLING CODE 4160-15-M

## Social Security Administration

### Supplemental Security Income Modernization Project Issue Paper

**AGENCY:** Social Security Administration, HHS.

**ACTION:** Notice of publication of issue paper by July 31, 1991.

**SUMMARY:** The Social Security Administration (SSA) announces the publication of an issue paper produced as a result of the public meetings of the Supplemental Security Income (SSI) Modernization Project. The SSI Modernization Project issue paper will be published in the **Federal Register** by July 31, 1991. There will be a 60 day comment period. This notice describes the contents of the paper.

**FOR FURTHER INFORMATION CONTACT:** SSI Modernization Project Staff, room 300, Altmeyer Bldg., 6401 Security Boulevard, Baltimore, MD 21235 (301) 965-3571.

**SUPPLEMENTARY INFORMATION:** SSA has undertaken a comprehensive examination of the SSI program, reviewing its fundamental structure and purpose. The SSI program has been in operation for over 17 years. The purpose of the Project is to determine if the SSI program is meeting and will continue to meet the needs of the population it is intended to serve in an efficient and caring manner, recognizing the constraints in the current fiscal climate.

The first phase of the Project is intended to create a dialogue that provides a full examination of how well the SSI program serves the needy aged, blind, and disabled.

To begin this dialogue, the Commissioner involved 24 people who are experts in the SSI program and/or related public policy areas. The experts include a wide range of representatives of the aged, blind, and disabled from private and nonprofit organizations and Federal and State government as well as former SSA staff. Dr. Arthur S. Flemming, former Secretary of Health, Education and Welfare is the chairperson. The Project held public meetings in Baltimore, Maryland; Washington, DC; New York City, New York; Chicago, Illinois; Los Angeles, California; Montgomery, Alabama; and Atlanta, Georgia. During these meetings, the public as well as the experts have expressed their individual views and concerns about the SSI program. The purpose of this initial dialogue was to exchange ideas and existing information about the program. This exchange facilitated the sharing of ideas among attendees' constituencies, including advocacy groups, state and local government and academicians. The outcome was a more informed public that has an interest in bringing individually produced innovative ideas for change in the SSI program to the Modernization Project.

As a result of these public meetings and the dialogue that occurred, SSA will publish in the **Federal Register** by July 31, 1991 a paper which covers the following:

In connection with each major issue that has been identified as a result of this process, a statement of the issue; background information; a discussion of public testimony surrounding the issue, as presented to the experts at the public meetings; and the options which have been identified as possible solutions to the issue.

The public will be invited to comment by September 30, 1991. The purpose of this notice is to alert the public to the upcoming publication of the SSI Modernization Project paper so that individuals and organizations can begin preparations to provide comments.

Dated: July 11, 1991.

**Peter D. Spencer,**

*Executive Staff Director, SSI Modernization Project.*

[FR Doc. 91-17109 Filed 7-17-91; 8:45 am]

BILLING CODE 4190-29-M

## DEPARTMENT OF THE INTERIOR

## Bureau of Land Management

**[UT-060-01-4212-14; UTU-65520]**

### Competitive Sale of Public Land in San Juan County, UT

**AGENCY:** Bureau of Land Management, Interior.

**ACTION:** Notice of Realty Action, UTU-65520, Competitive Sale of Public Land in San Juan County, Utah.

**SUMMARY:** Notice is given that the following described parcel of public land has been examined, and through the development of local land-use planning decisions based upon public input, resource considerations, regulations and Bureau policies has been found suitable for disposal by sale pursuant to section 203 of the Federal Land Policy and Management Act of 1976 (FLPMA) (90 Stat. 2750; 43 U.S.C. 1713) using competitive sale procedures (43 CFR 2711.3-1):

**Salt Lake Meridian, Utah**

T. 35 S., R. 23 E.,
Sec. 9, NW¼ NW¼.
The described land aggregates 40.00 acres.

The sale involves a parcel of land which is isolated, difficult and uneconomical to manage as public land, is not needed for any resource program, and is not suitable for management by the Bureau or any other Federal department or agency. The parcel has no public land access nor legal access through adjacent private land.

The land will not be offered for sale until at least sixty (60) days after publication of this notice in the **Federal Register**. The sale will be at no less than the appraised fair market value of $16,000.00.

Publication of this notice in the **Federal Register** segregates the public land from the operation of the public land laws and the mining laws. The segregative effect will end upon issuance of a patent, or two hundred seventy (270) days from the date of the publication, whichever occurs first.

**The Terms and Conditions Applicable to the Sale Are**

1. All minerals, including oil and gas, shall be reserved to the United States, together with the right to prospect for, mine, and remove the minerals.

2. A right-of-way will be reserved for ditches and canals constructed by the authority of the United States (Act of August 30, 1890, 26 Stat. 391; 43 U.S.C. 945).

3. The sale of the land will be subject to all valid existing rights, reservations, and privileges of record. Existing rights, reservations, and privileges of record include, but are not limited to, a section 4 Range Improvement on the parcel of public land being sold consisting of 1320 feet of 4-strand wire fence. Mr. Alan T. Black is the owner of the subject Section 4 Range Improvement. Any person other than Mr. Black who is the successful bidder on the lands being offered for sale, will be required to reimburse Mr. Black the sum of $600.00 which represents the adjusted value of the improvement.

*Sale Procedures:* Sealed bids would be accepted at the San Juan Resource Area Office, 435 North Main, P.O. Box 7, Monticello, Utah 84535 during regular business hours, 7:45 a.m. to 4:30 p.m., MDT, until September 19, 1991. Bid envelopes must be marked on the right front corner with "Bid for Public Sale," sale case number (UTU-65520), and sale date (September 20, 1991). Bids must be at not less than the appraised fair market value specified in this notice. Each sealed bid must be accompanied by a certified check, postal money order, or cashier's check made payable to Department of the Interior-BLM for not less than 10 percent of the amount bid. A statement as to the amount of the full bid shall be enclosed.

The successful bidder shall submit the remainder of the full purchase price prior to the expiration of one hundred eighty (180) days from date of the sale. The land will be offered for sale at 10 a.m., MDT on September 20, 1991, at the San Juan Resource Area Office. If the land is not sold on the sale date, it will remain for sale over the counter until sold or withdrawn from the market.

*Bidder Qualifications:* Bidders must be U.S. citizens, 18 years of age or more; a State or State instrumentality authorized to hold property; a corporation authorized to hold property; or a corporation authorized to own real estate in the State of Utah.

*Bid Standards:* The BLM reserves the right to accept or reject any and all offers or withdraw the land from sale if, in the opinion of the Authorized Officer, consummation of the sale would not be fully consistent with Section 203(g) of FLPMA or other applicable laws.

Comments: For a period of forty-five (45) days from the date of publication of this notice in the **Federal Register**, interested parties may submit comments to the Moab District Manager, Bureau of Land Management, P.O. Box 970, Moab, Utah 84532. Objections will be reviewed by the Utah State Director who may sustain, vacate, or modify this realty action. In the absence of any objections, this realty action will become the final determination of the Department of the Interior.

**SUPPLEMENTARY INFORMATION:** Additional information concerning the lands and the terms and conditions of the sale may be obtained from David L. Krouskop, Area Realty Specialist, San Juan Resource Area, 435 North Main, P.O. Box 7, Monticello, Utah 84535, (801) 587-2141, or from Brad Groesbeck, District Realty Specialist, Moab District Office, 82 East Dogwood, P.O. Box 970, Moab, Utah 84532, (801) 259-6111.

Dated: July 12, 1991.

**Kenneth V. Rhea,**

*Acting District Manager.*

[FR Doc. 91-17118 Filed 7-17-91; 8:45 am]

BILLING CODE 4310-DQ-M

---

## Fish and Wildlife Service

### Receipt of Applications for Permit

The following applicants have applied for a permit to conduct certain activities with endangered species. This notice is provided pursuant to Section 10(c) of the Endangered Species Act of 1973, *as amended* (16 U.S.C. 1531, *et seq.*):

Applicant: U.S. Fish & Wildlife Service, Ohio Coop. Fish & Wildlife Res. Unit, Columbus, OH 43210, PRT-757464.

The applicant requests a permit to experimentally release 16 captive-hatched, isolation-reared, juvenile red-crowned cranes (*Grus japonensis*) in each summer of 1991 and 1992 in Seney National Wildlife Refuge, Seney, Michigan to: (1) Estimate the survival, migration movements, dispersal pattern, and social behavior of whooping cranes (*G. americana*) in the Seney migratory scenario by use of the red-crowned crane as an experimental surrogate; (2) development of a reintroduction technique for the whooping crane which may benefit the red-crowned crane in its native Asia, where this intensive level of experimentation would be very difficult. All red-crowned cranes released will be equipped with two color-coded solar/Ni-Cad radiotransmitters and male cranes will be surgically vasectomized before they are released. Birds that stray out of the defined migration corridor are to be recaptured as soon as possible and transferred to an appropriate location. All red-crowned cranes will be removed from the study area by various types of capture methods at the end of the experiment, approximately a year from the release date. As a last resort after all non-lethal capture techniques have failed, lethal means of removal may be considered.

Written data or comments should be submitted to the Director, U.S. Fish and Wildlife Service, Office of Management Authority, 4401 North Fairfax Drive, room 432, Arlington, Virginia 22203 and must be received by the Director within 30 days of the date of this publication.

Documents and other information submitted with these applications are available for review by any party who submits a written request for a copy of such documents to, or by appointment during normal business hours (7:45-4:15) in, the following office within 30 days of the date of publication of this notice: U.S. Fish and Wildlife Service, Office of Management Authority, 4401 North Fairfax Drive, room 432, Arlington, Virginia 22203. Phone: (703/358-2104); FAX: (703/358-2281).

Dated: July 12, 1991.

**Maggie Tieger,**

*Acting Chief, Branch of Permits, Office of Management Authority.*

[FR Doc. 91-17066 Filed 7-17-91; 8:45 am]

BILLING CODE 4310-55-M

---

### Availability of a Draft Environmental Assessment and Amended Conservation Plan for an Incidental Take Permit for Development in the City of Boulder City, Clark County, NV; Correction

**AGENCY:** Fish and Wildlife Service, Interior.

**ACTION:** This notice corrects the title of the **Federal Register** notice [Vol. 56, No. 129, page 30764] published Friday, July 5,

1991. Written comments should be received on or before August 19, 1991.

Dated: July 12, 1991.

**Maggie Tieger,**

*Acting Chief, Branch of Permits, U.S. Office of Management Authority.*

[FR Doc. 91-17065 Filed 7-17-91; 8:45 am]

BILLING CODE 4310-55-M

## Mineral Management Service

### Accounting Procedure for Determining the Sufficiency of Estimated Payment Balances Established by Payors on Federal and Indian Oil Gas Leases

**AGENCY:** Minerals Management Service (MMS), Interior.

**ACTION:** Notice.

**SUMMARY:** The Minerals Management Service (MMS) hereby gives notice of its accounting procedure for determining the sufficiency of estimated royalty payment balances that have been established by payors on Federal and Indian oil and gas leases. In accordance with this procedure, the sufficiency of estimated payment balances will be determined at the lease level. To avoid interest charges for insufficient estimates, payors must ensure that the estimated payment balance that they have previously established at the revenue source, product type, and selling arrangement level is sufficient to cover actual monthly royalties to be reported for all products produced on the lease.

**EFFECTIVE DATE:** December 2, 1991.

**FOR FURTHER INFORMATION CONTACT:** Connie G. Bartram, Minerals Management Service, Royalty Management Program, Payor Accounting Branch, MS 3210, P.O. Box 25165, Denver, Colorado 80225-0165, telephone (303) 231-3133 or (FTS) 326-3133.

**SUPPLEMENTARY INFORMATION:** Federal and Indian oil and gas leases provide that royalties on production shall be due and payable monthly on the last day of the month following the month in which the oil or gas is produced and sold. Royalty payors may, however, establish an estimated payment balance and delay reporting and paying actual royalties an additional month. Estimated payment balances are established by individual payors for their portion of total royalty payment responsibility on a lease.

The procedures to establish or to adjust estimated payments are contained in the MMS Oil and Gas Payor Handbook, Volume II, Section 3.5. In accordance with the handbook, payors are required to report estimated royalty payments on a Report of Sales and Royalty Remittance (Form MMS-2014) at the lease revenue source, product type, and selling arrangement level. Payment of royalties is due on the last day of the month following the month in which the estimate was reported on the Form MMS-2014.

The MMS is providing notification of its accounting procedure for determining the sufficiency of estimated payment balances established by payors. As of the effective date of this Notice, MMS will compare the estimate balance to the actual royalties reported and paid during the time period the due date is extended because of an estimate. This comparison and determination of the sufficiency/insufficiency of estimated payments will be by individual payor at the lease level rather than the revenue source, product type, and selling arrangement level.

The MMS intends to assess interest charges on insufficient estimated payment balances beginning with royalties to be reported on Form MMS-2014 reports for the September 1991 sales month. Royalties on production during September 1991, for leases on which a payor has established an estimated payment balance, must be reported on Form MMS-2014 not later than December 2, 1991, which is the first business day following November 30, 1991. Therefore, the effective date of this Notice is December 2, 1991.

Payors should review the estimated payment balances that they have previously established at the revenue source, product type, and selling arrangement level on each Federal or Indian lease to ensure that the total is sufficient to cover total actual monthly royalties that may be reported for all products produced on the lease. If the total of the estimated payment balance previously established by a payor on a lease is not sufficient, the payor should increase the estimate balance on the lease to avoid interest charges on insufficient estimates. An increase in the total estimate balance on a lease must be established by October 31, 1991, to assure coverage of royalties due on September 1991 production, to be reported by December 2, 1991.

Notification of MMS's accounting procedure for determining the sufficiency of estimate balances on both Federal and Indian leases, as discussed in this Notice, was provided to all royalty payors with current estimate balances by letter dated July 8, 1991.

Dated: July 12, 1991.

**Donald T. Sant,**

*Associate Director for Royalty Management.*

[FR Doc. 91-17085 Filed 7-17-91; 8:45 am]

BILLING CODE 4310-MR-M

## National Park Service

### Environmental Statements, Denali National Park and Preserve

**AGENCY:** National Park Service, Interior.

**ACTION:** Notice of availability.

**SUMMARY:** Notice is hereby given that pursuant to the provisions of section 2 of the Act of September 28, 1976, 16 U.S.C. 1901 *et seq.*, and in accordance with the provisions of § 9.17 of 36 CFR 9A, George Bailey has filed a plan of operations in support of proposed mining operations on lands embracing the Discovery No. 1 placer mining claims with Denali National Park and Preserve.

**ADDRESSES:** This plan is available for inspection during normal business hours at the following locations.

Denali National Park and Preserve, Park Headquarters, Denali National Park, Alaska.

Alaska Regional Office, Minerals Management Division, National Park Service, 2525 Gambell Street, Anchorage, Alaska 99503-2892.

**FOR FURTHER INFORMATION CONTACT:** Linda Toms, Assistant Superintendent, Denali National Park and Preserve (907) 683-2294 or Floyd Sharrock, Chief, Minerals Management Division, at the addresses above (907) 257-2626.

**Paul F. Haertel,**

*Acting Regional Director, Alaska Region.*

[FR Doc. 91-17128 Filed 7-17-91; 8:45 am]

BILLING CODE 4310-70-M

### National Register of Historic Places; Notification of Pending Nominations

Nominations for the following properties being considered for listing in the National Register were received by the National Park Service before July 6, 1991. Pursuant to § 60.13 of 36 CFR part 60 written comments concerning the significance of these properties under the National Register criteria for evaluation may be forwarded to the National Regiser, National Park Service, P.O. Box 37127, Washington, DC 20013-

7127. Written comments should be submitted by August 2, 1991.

**Carol D. Shull,**

*Chief of Registration, National Register.*

ARIZONA

**Maricopa County**

*Mesa Woman's Club*, 200 N. MacDonald, Mesa, 91000995

*Morristown Store*, US 89 NW of Castle Hot Springs Rd., Morristown vicinity. 91001003

FLORIDA

**Lake County**

*Woman's Club of Eustis*, 227 N. Center St., Eustis, 91001006

ILLINOIS

**Cook County**

*Gross Point Village Hall*, 609 Ridge Rd., Wilmette, 91001001

**Kane County**

*Fire Barn 5*, 533 St. Charles Rd., Elgin, 91001002

**La Salle County**

*Fletcher, Ruffin Drew, House*, 609 E. Broadway St., Streator, 910010000

LOUISIANA

**Caddo Parish**

*Wile House*, 626 Wilder Pl., Shreveport, 91001007

**Jefferson Davis Parish**

*Derouen House*, 214 W. Plaquemine, Jennings, 91001021

MICHIGAN

**Eaton County**

*9622nd Army Air Corps Reserve Recovery Unit—Civil Air Patrol Quonset Huts*, 16601 Airport Rd., Lansing, 91001017

**Houghton County**

*Michels, John J., House*, 121 E. Houghton Ave., Houghton, 91001018

**Iron County**

*Radka—Bradley House*, 176 W. Michigan Ave., Rogers City, 91001019

**Presque Isle County**

*BARNEY, F. T. Shipwreck*, Address Restricted, Rogers City vicinity, 91001016

**Wayne County**

*Assumption of the Blessed Virgin Mary Church Complex*, 13770 Gratiot Ave., Detroit, 91001020

*Ginsburg, Bernard, House*, 236 Adelaide, Detroit, 91001015

MINNESOTA

**Hennepin County**

*Crane Island Historic District*, Crane Island in Lake Minnetonka, Minnetrista, 91001005

**Ramsey County**

*Holman Field Administration Building*, 644 Bayfield St., St. Paul, 91001004

WEST VIRGINIA

**Berkeley County**

*Gerrardstown Historic District*, Roughly, along WV 51 and Virginia Line Rd., Gerrardstown, 91001008

**Glimer County**

*Little Kanawha Valley Bank*, 5 Howard St., Glenville, 91001012

**Kanawha County**

*Simpson Memorial Methodist Episcopal Church*, 607 Shrewsbury St., Charleston. 91001011

**Nicholas County**

*Nicholas County Courthouse*, 700 Main St., Summerville, 91001014

**Ohio County**

*McLure, John, House*, 203 S. Front St., Whelling. 91001013

*Harwood Tool Company*, At the foot of N. Nineteenth St. on the E bank of the Ohio R., Wheeling, 91001010

**Putnam County**

*Buffalo Town Square Historic District*, Jct. of WV 62 and High St., Buffalo, 91001009

WYOMING

**Albany County**

*Goodale, Hilliam, House*, 214 S. Fourteenth St., Laramie. 910000996

**Fremont County**

*Torrey Lake Club/Ranch Historic District*, Along W shores of Lake Julia, Torrey Lake and Ring Lake, Dubois. 91000999

**Niobrara County**

*Lusk Hater Tower*, Along C & NH RR tracks across from US 20, Lusk, 91000997

**Park County**

*Blair, Quintin, House*, 558 Greybull Hwy., Cody, 91000998

[FR Doc. 91-17129 Filed 7-17-91; 8:45 am]

BILLING CODE 4310-70-M

## INTERSTATE COMMERCE COMMISSION

### Motor Passenger Carrier or Water Carrier Finance Applications

The following applications seek approval to consolidate, purchase, merge, lease operating rights and properties of, or acquire control of motor passenger carriers or water carriers pursuant to 49 U.S.C. 11343-11344. The applications are governed by 49 CFR Part 1182, as revised in *Pur., Merger & Cont.-Motor Passenger & Water Carriers*, 5 I.C.C.2d 786 (1989). The findings for these applications are set forth at 49 CFR 1182.18. Persons wishing to oppose an application must follow the rules under 49 CFR part 1182, subpart B. If no one timely opposes the application, this publication automatically will become the final action of the Commission.

MC-F-19896, filed July 5, 1991. Kerrville Bus Company, Inc.—Merger—Kerrville Tours, Inc., Painter Bus Lines, Inc., Custom Convention Services, Inc., and North Texas Lines, Inc. Applicants' representative: Jerry Prestridge, P.O. Box 1945, Austin, TX 78767. Applicant Kerrville Bus Company, Inc. (KBC), a motor common and contract carrier of passengers owns all of the issued and outstanding capital stock of Kerrville Tours, Inc. (KTI) (MC-12907), Painter Bus Lines, Inc. (PBL) (MC-57678), Custom Convention Services, Inc. (CCS) (MC-180463), and North Texas Lines, Inc. (NTL) (MC-191319), all motor common and contract carriers of passengers in interstate and intrastate commerce. The business address of all of the involved motor carriers is 429 Sidney Baker Street, Kerrville, TX 78028. KTI, PBL, CCS, and NTL are to be merged into KBC, which will be the surviving company upon consummation of the transaction.

Transfer of the intrastate authority is effected under 49 U.S.C. 11341(a). Temporary authority under 49 U.S.C. 11349 was granted July 10, 1991.

Decided: July 12, 1991.

By the Commission, the Motor Carrier Board.

**Sidney L. Strickland, Jr.,**

*Secretary.*

[FR Doc. 91-17110 Filed 7-17-91; 8:45 am]

BILLING CODE 7035-01-M

[Docket No. AB-32 (Sub-No. 44X)]

### Massachusetts Bay Transportation Authority and Boston and Maine Corp.—Abandonment and Discontinuance Exemption—in Middlesex County, MA; Exemption of Interim Trail Use of Abandonment

July 12, 1991.

Massachusetts Bay Transportation Authority (MBTA) and Boston and Maine Corporation (BM) filed a notice of exemption under 49 CFR 1152 subpart F—Exempt Abandonments and Discountinuances for MBTA to abandon and BM to discontinue operations over an approximately 10.42-mile line or railroad between milepost 0.00, at Somerville, and milepost 11.91, at Bedford, Middlesex County, MA.

MBTA and BM have certified that: (1) No local traffic has moved over the line for at least 2 years; (2) any overhead traffic on the line can be rerouted over other lines; and (3) no formal complaint filed by a user of rail service on the line (or a State or local government entity

acting on behalf of such user) regarding cessation of service over the line either is pending with the Commission or with any U.S. District Court or has been decided in favor of the complainant within the 2-year period. The appropriate State agency has been notified in writing at least 10 days prior to the filing of this notice.

Attached to the notice of exemption filed by MBTA and BM are requests by the Towns of Arlington, Lexington, and Bedford for a notice of interim trail use (NITU) as well as statements of their willingness to assume financial responsibility. MBTA indicates its willingness to negotiate with the three towns of interim trail use.

While a petition for interim trail use need not be filed until 10 days after the date the notice of exemption is published in the **Federal Register** [49 CFR 1152.29(b)(2)], the provisions of 16 U.S.C. 1247(d) are applicable and all the criteria for imposing interim trail use/rail banking have been met. Accordingly, in light of MBTA's willingness to enter into negotiations, a NITU will be issued under 49 CFR 1152.29. The parties may negotiate an agreement during the 180-day period prescribed below. If no agreement is reached within 180 days, MBTA may fully abandon the line. See 49 CFR 1152.29(d)(1).

Any other political subdivision, state, or qualified private entity interested in acquiring or using the involved right-of-way for interim trail use/rail banking may file an appropriate petition before July 29, 1991. If additional statements are filed, MBTA is directed to respond to them. Use of the right-of-way for trail purposes is subject to restoration for railroad purposes.

As a condition to use of this exemption, any employee affected by the abandonment shall be protected under *Oregon Short Line R. Co—Abandonment—Goshen*, 360 I.C.C. 91 (1979). To address whether this condition adequately protects affected employees, a petition for partial revocation under 49 U.S.C. 10505(d) must be filed.

Provided no formal expression of intent to file an offer of financial assistance has been received, this exemption will be effective on August 17, 1991 (unless stayed pending reconsideration). Petitions to stay that do not involve environmental issues,[1] formal expressions of intent to file an offer of financial assistance under 49 CFR 1152.27(c)(2),[2] and trail use/rail banking statements under 49 CFR 1152.29 must be filed by July 29, 1991.[3] Petitions for reconsideration or requests for public use conditions under 49 CFR 1152.28 must be filed by August 7, 1991, with: Office of the Secretary, Case Control Branch, Interstate Commerce Commission, Washington, DC 20423.

A copy of any petition filed with the Commission should be sent to applicant's representative: Charles H. Montange, 1400 16th St., NW., #301, Washington, DC 20036.

If the notice of exemption contains false or misleading information, use of the exemption is void *ab initio*.

MBTA has filed an environmental report which addresses environmental or energy impacts, if any, from this abandonment.

The Section of Energy and Environment (SEE) will prepare an environmental assessment (EA). SEE will issue the EA by July 23, 1991. Interested persons may obtain a copy of the EA from SEE by writing to it (room 3219, Interstate Commerce Commission, Washington, DC 20423) or by calling Elaine Kaiser, Chief, SEE at (202) 275-7684. Comments on environmental and energy concerns must be filed within 15 days after the EA becomes available to the public.

Environmental, public use, or trail use/rail banking conditions will be imposed, where appropriate, in a subsequent decision.

*It is ordered:*

1. Subject to the conditions set forth above, MBTA may discontinue service, cancel tariffs for this line on not less that 10 day's notice to the Commission, and salvage track and material consistent with interim trail use/rail banking after the effective date of this notice of exemption and NITU. Tariff cancellations must refer to this notice of exemption and NITU by date and docket number.

2. If an interim trail use/rail banking agreement is reached, it must require the trail user to assume, for the term of the agreement, full responsibility for management of, any liability arising out of the transfer of use (if the user is immune from liability, it need only indemnify MBTA against any potential liability), and the payment of any taxes that may be levied or assessed against the right-of-way.

3. Interim trail use/rail banking is subject to the future restoration of rail service.

4. If the user intends to terminate trail use, it must send the Commission a copy of this notice of exemption and NITU and request that it be vacated on a specified date.

5. If an agreement for interim trail use/rail banking is reached by the 180th day after publication of this notice, interim trail use may be implemented. If no agreement is reached by the 180th day, MBTA may fully abandon the line.

6. Provided no formal expression of intent to file an offer of financial assistance has been received, this notice of exemption and NITU will be effective August 17, 1991.

By the Commission, David M. Konschnik, Director, Office of Proceedings.

**Sidney L. Strickland, Jr.,**

*Secretary.*

[FR Doc. 91-17112 Filed 7-17-91; 8:45 am]

BILLING CODE 7035-01-M

---

[1] A stay will be routinely issued by the Commission in those proceedings where an informed decision on environmental issues (whether raised by a party or by the Section of Energy and Environment in its independent investigation) cannot be made prior to the effective date of the notice of exemption. See *Exemption of Out-of-Service Rail Lines*, 5 I.C.C.2d 377 (1989). Any entity seeking a stay involving environmental concerns is encouraged to file its request as soon as possible in order to permit this Commission to review and act on the request before the effective date of this exemption.

[2] See *Exempt. of Rail Abandonment-Offers of Finan. Assist.*, 4 I.C.C.2d 164 (1987).

[3] The Commission will accept a late-filed trail use statement so long as it retains jurisdiction to do so.

---

**[Finance Docket No. 31880]**

## Wisconsin Central Ltd.—Purchase—Chicago and North Western Transportation Co. Line Between South Itasca and Cameron, WI; Decision

**AGENCY:** Interstate Commerce Commission.

**ACTION:** Notice of decision modifying procedural schedule.

**SUMMARY:** The Commission is granting the request of Soo Line Railroad Company, joined by applicants, Wisconsin Central Ltd. and Chicago and North Western Transportation Company, for a 3-week extension of time to file comments in this proceeding. The procedural schedule is modified accordingly.

**DATES:** These dates modify the procedural schedule previously published in this proceeding. Written comments must be filed with the Interstate Commerce Commission no later than August 12, 1991, and concurrently served on applicants' representatives, the United States Secretary of Transportation, and the Attorney General of the United States. Comments from the Secretary of Transportation and Attorney General of the United States must be filed by August 27, 1991. The Commission will

issued a service list shortly thereafter. Comments must be served on all parties of record within 10 days of the Commission's issuance of the service list and confirmed by certificate of service filed with the Commission indicating that all designated individuals and organizations on the service list in this proceeding have been properly served copies of these comments. Applicants' reply is due by September 16, 1991.

**ADDRESSES:** Send original and 10 copies of all documents to: Office of the Secretary, Case Control Branch, attn: Finance Docket No. 31880, Interstate Commerce Commission, Washington, DC 20423.

In addition, concurrently send one copy of all documents to the United States Secretary of Transportation, the Attorney General of the United States, and to applicants' representatives:

Docket Clerk, Office of Chief Counsel, Federal Railroad Administration, room 8201, 400 Seventh St., SW., Washington, DC 20590.

Attorney General of the United States, United States Department of Justice, 10th & Constitution Ave., Washington, DC 20530.

William C. Sippel, Oppenheimer Wolff & Donnelly, Two Illinois Center, 233 North Michigan Avenue, suite 2400, Chicago, IL 60601.

Stuart F. Gassner, Chicago and North Western Transportation Company, 165 North Canal Street, Chicago, IL 60606.

**FOR FURTHER INFORMATION CONTACT:** Joseph H. Dettmar, (202) 275-7245, (TDD for hearing impaired: (202) 275-1721).

**SUPPLEMENTARY INFORMATION:** By decision served June 19, 1991, and published in the **Federal Register** on June 20, 1991 at 56 FR 28413, the Commission accepted the application filed May 21, 1991, by Wisconsin Central Ltd. (WCL) and Chicago and North Western Transportation Company (CNW), collectively referred to as applicants, seeking approval under 49 U.S.C. 11343, *et seq.*, for WCL to purchase CNW's line between milepost 49.00 at Cameron, WI and milepost 87.13 at Trego, WI and between milepost 0.00 at Trego (same point) and milepost 58.90 at South Itasca, WI, a total distance of 97.03 miles.[1] In that decision, we also established a procedural schedule for the filing of written comments and applicants' reply.

On July 9, 1991, Soo Line Railroad Company (Soo), joined by applicants, filed a request for a 3-week extension of time, until August 12, 1991, to file comments. The parties note that the proposed transaction is the subject of litigation between Soo and WCL in the U.S. District Court for the District of Minnesota. According to the parties, they have recently reached a tentative agreement that would provide, among other things, for the purchase by WCL of Soo's line between Ladysmith and Superior, WI. This agreement will settle the Federal court proceeding and resolve the issues that Soo would otherwise raise before the Commission. They anticipate executing the final agreement on or before August 12, 1991.

The parties request expedited handling of the request and a decision by July 12, 1991. Absent a decision by that date, Sol explains that it must file its discovery requests to protect its interests until a definitive agreement is reached. According to the parties, execution of a definitive agreement will obviate the need for Soo to pursue discovery or to file comments regarding the transaction proposed in this proceeding.

We will grant the requested 3-week extension. The due date for filing of written comments by interested parties is extended from July 22, 1991, to August 12, 1991. The due date for the filing of comments by the United States Secretary of Transportation, and the Attorney General of the United States is extended from August 6, 1991, to August 27, 1991. The due date for applicants' reply is extended from August 26, 1991, to September 16, 1991. Applicants, in a pleading filed July 10, 1991, have indicated their willingness to have their time to reply compressed, and have asked us to maintain the August 26, 1991 reply date. Applicants may file their reply earlier than September 16, 1991, which will allow us to close the record sooner and issue a decision shortly thereafter.

This action will not significantly affect either the quality of the human environment or the conservation of energy resources.

*It is ordered.*

1. The request for a 3-week extension to file comments is granted. The procedural schedule is modified as stated above.

2. This decision is effective on July 17, 1991.

Decided: July 12, 1991.

By the Commission, Chairman Philbin, Vice Chairman Emmett, Commissioners Simmons, Phillips, and McDonald.

**Sidney L. Strickland, Jr.,**

*Secretary.*

[FR Doc. 91-17111 Filed 7-17-91; 8:45 am]

BILLING CODE 7035-01-M

[1] As part of the transaction, WCL will purchase CNW's terminal and yard facilities at Spooner, WI and also acquire the right to use a portion of CNW's "New Yard" at South Itasca.

## NATIONAL ARCHIVES AND RECORDS ADMINISTRATION

### Agreement on Transfer of Census Records to the National Archives

**AGENCY:** National Archives and Records Administration.

**ACTION:** Notice.

**SUMMARY:** To ensure the timely and comprehensive transfer of records to the National Archives, the Bureau of the Census and the National Archives and Records Administration have agreed that the 1952 agreement between the agencies providing for the transfer of census records to the National Archives include survey records. Modifications to the agreement are published in the **Federal Register** in accordance with 44 U.S.C. 2108(b).

**DATES:** The amended agreement between the Bureau of the Census and the National Archives and Records Administration is effective April 26, 1991.

**ADDRESSES:** Assistant Archivist, Office of the National Archives, National Archives and Records Administration, Washington, DC 20408.

**FOR FURTHER INFORMATION CONTACT:** Assistant Archivist, Office of the National Archives at (202) 501-5300.

**SUPPLEMENTARY INFORMATION:** The text of the correspondence containing the amendment is reproduced at the end of this notice.

Dated: July 10, 1991.

**Don W. Wilson,**

*Archivist of the United States.*

Hon. Don W. Wilson,

*Archivist of the United States, National Archives and Records Administration, Washington, DC 20408*

Dear Dr. Wilson: During the course of our joint effort to accelerate release of machine-readable survey and census data files to the National Archives and Records Administration (NARA), we realized that a discrepancy existed between the language in our 1952 correspondence and NARA regulations. As you are aware, the agreement embodied in the 1952 correspondence was incorporated by reference in 44 U.S.C. § 2108(b).

Specifically, the 1952 correspondence provides for transfer to NARA and protection by it of "decennial population census" records for a period of 72 years from the date

of the decennial census in question. The NARA regulations, however, state that "NARA will not grant access to restricted census and survey records of the Bureau of the Census less than 72 years old containing data identifying individuals enumerated in population censuses in accordance with 44 U.S.C. 2108(b)." (Emphasis supplied.) 36 CFR § 1256.4a(3).

We believe that surveys, as well as decennial census records, should be releasable after 72 years from completion of the survey for use in legitimate historical, genealogical, or other worthwhile research. If you agree, please denote your concurrence by signing in the space provided below. After signing, we would request that you publish this letter in the **Federal Register** as an amendment to our 1952 correspondence in accordance with 44 U.S.C. § 2108(b).

The Census Bureau and NARA have worked diligently and successfully to clarify issues of mutual concern. We look forward to continuing this tradition of cooperation.

Sincerely,

C.L. Kincannon,

for Barbara Everitt Bryant,

*Director, Bureau of the Census.*

I concur in the terms and conditions set forth above.

Date: April 26, 1991.

Don W. Wilson, Ph.D.

[FR Doc. 91-17071 Filed 7-17-91; 8:45 am]

BILLING CODE 7515-01-M

## NATIONAL FOUNDATION ON THE ARTS AND THE HUMANITIES

### National Council on the Arts; Notice of Meeting

Pursuant to section 10(a)(2) of the Federal Advisory Committee Act (Pub. L. 92-463), as amended, notice is hereby given that a meeting of the National Council on the Arts will be held on August 2, 1991, from 9 a.m.-5:30 p.m. and on August 3 from 9 a.m.-5 p.m. in room M-09 at the Nancy Hanks Center, 1100 Pennsylvania Avenue NW., Washington, DC 20506.

This meeting will be open to the public on a space available basis. The topics for discussion will include Chairman's Opening Remarks and Swearing-In of New Council Members, Legislative Update, Report from NASAA and NALAA, Report from Regional Representative, Discussion of FY 1993 Budget, Reports from NEA Working Groups, and Program Review and/or Guidelines and/or Application Review and/or Discussion with Program Director for the Arts in Education, Challenge/Advancement, Dance, Dance on Tour, Design Arts, Expansion Arts, Folk Arts, Inter-Arts, International, Literature, Locals, Media Arts, Museum, Music, Policy, Planning and Research, State and Regional, Theater, and Visual Arts Programs.

If in the course of application review it becomes necessary for the Council to discuss non-public financial information about individuals, such as salary information, submitted with grant applications, the Council will go into closed session for that limited purpose only pursuant to subsection (c)(4) of section 552b of title 5, United States Code. Such closure would be in accordance with the determination of the Chairman of March 6, 1991.

Any interested persons may attend, as observers, Council discussions and reviews which are open to the public.

If you need special accommodations due to a disability, please contact the Office of Special Constituencies, National Endowment for the Arts, 1100 Pennsylvania Avenue NW., Washington, DC 20506, 202/682-5532, TTY 202/682-5496, at least seven (7) days prior to the meeting.

Further information with reference to this meeting can be obtained from Ms. Yvonne M. Sabine, Advisory Committee Management Officer, National Endowment for the Arts, Washington, D.C. 20506, or call (202) 682-5433.

Dated: July 12, 1991.

**Yvonne M. Sabine,**

*Director, Council and Panel Operations, National Endowment for the Arts.*

[FR Doc. 91-17059 Filed 7-17-91; 8:45 am]

BILLING CODE 7537-01-M

## NATIONAL SCIENCE FOUNDATION

### Division of Ocean Sciences; Meeting

The National Science Foundation announces the following meeting:

*Name*: Ocean Science Review Panel.

*Date and time*: August 5,6, 1991, 8:30-5.

*Place*: National Science Foundation, 1800 G Street NW., Washington, DC 20550, Room 540-B.

*Type of meeting*: Closed.

*Contact person*: Dr. Gustav Paffenhofer, Associate Program Director, Biological Oceanography Section, Room 609, National Science Foundation, Washington, DC 20550, Telephone (202) 257-9600.

*Purpose of meeting*: To provide advice and recommendations concerning support for research in oceanography.

*Agenda*: Closed—To review and evaluate research proposals as part of the selection process for awards.

*Reason for closing*: The proposals being reviewed include information of a proprietary or confidential nature, including technical information; financial data, such as salaries; and personal information concerning individuals associated with the proposals. These matters are within exemptions (4) and (6) of U.S.C. 552b(c), Government in the Sunshine Act.

Dated: July 15, 1991.

**M. Rebecca Winkler,**

*Committee Management Officer.*

[FR Doc. 91-17135 Filed 7-17-91; 8:45 am]

BILLING CODE 7555-01-M

## NUCLEAR REGULATORY COMMISSION

### Documents Containing Reporting or Recordkeeping Requirements: Office of Management and Budget Review

**AGENCY:** Nuclear Regulatory Commission.

**ACTION:** Notice of the Office of Management and Budget review of information collection.

**SUMMARY:** The Nuclear Regulatory Commission (NRC) has recently submitted to the Office of Management and Budget (OMB) for review the following proposal for the collection of information under the provisions of the Paperwork Reduction Act (44 U.S.C. chapter 35).

1. *Type of submission, new, revision, or extension:* Extension.
2. *The title of the information collection:*
   —DOE/NRC Form 742—Material Balance Report and NUREG/BR-0007, instructions for completing Forms 742 and 742C.
   —DOE/NRC Form 742C—Physical Inventory Listing
3. *The form number if applicable:* Same as item 2 above.
4. *How often the collection is required:* Semiannually for affected special nuclear material licensees. Annually for affected source material licensees. As specified in Facility Attachments for licensees reporting under 10 CFR part 75.
5. *Who will be required or asked to report:* Persons licensed to possess specified quantities of special nuclear material or source material.
6. *An estimate for the number of responses:*
   —DOE/NRC Form 742: 600
   —DOE/NRC Form 742C: 240

*An estimate of the total number of hours needed to complete the requirement or request:*

—DOE/NRC Form 742: One hour per response, for a total of 600 hours annually.

—DOE/NRC Form 742C: Eight hours per response, for a total of 1,920 hours annually.

8. An indication of whether section 3504(h), Pub. L. 96-511 applies: Not applicable.
9. *Abstract:* Each licensee authorized to possess special nuclear material

totalling more than 350 grams of contained uranium-235, uranium-233, or plutonium, or any combination thereof, and any licensee authorized to possess 1,000 kilograms of source material, is required to submit DOE/NRC Form 742. Reactor licensees required to submit DOE/NRC Form 742, and facilities subject to 10 CFR part 75, are required to submit DOE/NRC Form 742C. The information is used by NRC to fulfill its responsibilities as a participant in the US/IAEA Safeguards Agreement and bilateral agreements with Australia and Canada, and to satisfy its domestic safeguards responsibilities.

Copies of the submittal may be inspected or obtained for a fee from the NRC Public Document Room, 2120 L Street NW. (Lower Level), Washington, DC.

Comments and questions may be directed by mail to the OMB reviewer: Ronald Minsk, Paperwork Reduction Project (3150-0004, 3150-0058), Office of Information and Regulatory Affairs, NEOB-3019, Office of Management and Budget, Washington, DC 20503.

Comments may also be communicated by telephone at (202) 395-3084.

The NRC Clearance officer is Brenda Jo. Shelton, (301) 492-8132.

Dated at Bethesda, Maryland, this 10th day of July 1991.

For the Nuclear Regulatory Commission.

**Gerald F. Cranford,**

*Designated Senior Official for Information Resources Management.*

[FR Doc. 91-17120 Filed 7-17-91; 8:45 am]

BILLING CODE 7590-01-M

---

**[Docket Nos. 50-272 and 50-311]**

## Public Service Electric & Gas, Philadelphia Electric, Delmarva Power & Light, and Atlantic City Electric Companies; Salem Nuclear Generating Station, Units 1 and 2; Environmental Assessment and Finding of No Significant Impact

The U.S. Nuclear Regulatory Commission (the Commission) is considering issuance of an amendment to Facility Operating License Nos. DPR-70 and DPR-75, issued to Public Service Electric and Gas Company, et. al. (the licensees) for operation of the Salem Nuclear Generating Station, Units 1 and 2, located at the licensees' site in Salem County, New Jersey.

### Environmental Assessment

*Identification of Proposed Action*

The proposed amendment would allow the licensees to place fuel with a maximum initial enrichment of 4.55 weight percent of U-235 (w/o U-235) in the reactor, new fuel storage racks and the spent fuel storage racks.

The proposed action is in accordance with the licensees' application for amendments dated November 19, 1990, as supplemented by letters dated April 1, 1991, May 20, 1991 and June 14, 1991.

*The Need for the Proposed Action*

The licensees intend to increase the fuel enrichment for the Salem units to a maximum initial value of 4.55 w/o U-235. New fuel will be stored in the new fuel storage racks while awaiting loading into the core. It is anticipated that the higher enrichment fuel will be used for the Salem 1, Cycle 11 reload and for the Salem 2, Cycle 8 reload. Currently, fuel with a maximum initial enrichment of 4.05 w/o U-235 can be stored in the new fuel storage racks, placed in the reactor or stored in the spent fuel storage pool.

*Environmental Impacts of the Proposed Action*

The Commission has completed its evaluation of the proposed revisions to the Technical Specifications (TSs). The proposed amendments would allow fuel with a maximum initial enrichment of 4.55 w/o U-235 to be stored in the new fuel storage racks, placed in the reactor or stored in the spent fuel storage pool. Currently, fuel with a maximum enrichment of 4.05 w/o U-235 may be placed in the aforementioned locations. Changes to the burnup limits have not been requested. Therefore, use of fuel with a maximum enrichment of 4.55 w/o U-235 would not significantly increase the probability of consequences of any accidents previously analyzed. No significant changes in the types or amounts of radiological effluents, during normal operation or postulated accidents, that may be released offsite are incurred by the increased w/o U-235 enrichment. As a result, no significant increase in the individual or cumulative occupational radiation exposure is noted.

Therefore, because the proposed changes do not increase the probability or consequences of accidents, no changes are being made in the types or amounts of any radiological effluents that may be released offsite and there is no significant increase in the allowable individual or cumulative occupational radiation exposure, the Commission concludes that this proposed action would result in no significant radiological environmental impact.

With regard to potential nonradiological impacts, the proposed change to the TSs involves systems located within the restricted area as defined by 10 CFR part 20. The proposed change will not result in a measurable change to the nonradiological plant effluents and therefore will not have any environmental impact.

The environmental impacts of transportation resulting from the use of higher enrichment fuel and extended irradiation are discussed in the staff assessment entitled, "NRC Assessment of the Environmental Effects of Transportation Resulting from Extended Fuel Enrichment and Irradiation", published in the **Federal Register** on August 11, 1988 (53 FR 30355). As indicated therein, the environmental cost contribution of the proposed increase in the fuel enrichment and irradiation limits are either unchanged or may, in fact, be reduced from those summarized in Table S-4 as set forth in 10 CFR 51.52(c). The licensees confirmed that this analysis is applicable to the requested change.

Therefore, the Commission concludes that there are no significant nonradiological environmental impacts associated with the proposed amendments.

*Alternative to the Proposed Action*

Since the Commission concluded that there are no significant environmental effects that would result from the proposed action, any alternatives with equal or greater environmental impacts need not be evaluated.

The principal alternative would be to deny the requested amendments. This would not reduce environmental impacts of plant operation and would result in reduced operational flexibility.

*Alternative Use of Resources*

This action does not involve the use of any resources not previously considered in the "Final Environmental Statement Related to Operation of Salem Nuclear Generating Station, Units 1 & 2," dated April 1973.

*Agencies and Persons Consulted*

The NRC staff reviewed the licensees' request and did not consult other agencies or persons.

*Finding of No Significant Impact*

The Commission has determined not to prepare an environmental impact statement for the proposed license amendments.

Based on the foregoing environmental assessment, we conclude that the proposed action will not have a significant effect on the quality of the human environment.

For further details with respect to this action, see the application for amendments dated November 11, 1990, and supplements dated April 1, 1991, May 20, 1991 and June 4, 1991, which are available for public inspection at the Commission's Public Document Room, 2120 L Street NW., Washington, DC 20555 and at the Salem Free County Public Library, 112 West Broadway, Salem, New Jersey 08079.

Dated at Rockville, Maryland, this 11th day of July 1991.

For the Nuclear Regulatory Commission.

**Walter R. Butler,**

*Director, Project Directorate I-2, Division of Reactor Projects—I/II, Office of Nuclear Reactor Regulation.*

[FR Doc. 91-17119 Filed 7-17-91; 8:45 am]

BILLING CODE 7590-01-M

## OFFICE OF PERSONNEL MANAGEMENT

### Performance Management and Recognition System Review; Meetings

The Office of Personnel Management announces the following meetings:

*Name:* Performance Management and Recognition System Review Committee.

*Dates and times:* Aug. 6, 1991, 10 a.m. to 2 p.m.; Aug. 16, 1991, 9 a.m. to 12:30 p.m.; Sept. 10, 1991, 10 a.m. to 5 p.m.; Oct. 8, 1991, 10 a.m. to 5 p.m.; Oct. 29, 1991, 10 a.m. to 5 p.m.

*Place:* Office of Personnel Management, 1900 E Street NW., Washington, DC 20415-0001. Meetings will be held in Room 1350, except for Sept. 10, when the committee will meet in Suite 5H09, Room 5A06A.

*Type of meeting:* Open.

*Point of contact:* Ms. Doris Hausser, Chief of the Performance Management Division, room 7454, Office of Personnel Management, 1900 E Street NW., Washington DC 20415-0001.

*Purpose of meetings:* To review the Performance Management and Recognition System and make recommendations for a fair and effective performance management system for Federal managers.

*Agenda:* Committee goals and objectives; scope of inquiry; research and resources on performance-based pay; basic issues and challenges facing the committee; committee administration; comments and observations; public input; closing.

**SUPPLEMENTARY INFORMATION:** The committee welcomes written data, views, or comments concerning systems for managing and recognizing the performance of Federal managers. All such submissions received by close of business (COB) on the dates indicated below will be provided to the committee members and included in the record of the respective meeting:

| If received by COB | Input will be considered at the meeting: |
|---|---|
| July 30, 1991 | Aug. 6, 1991. |
| Aug. 9, 1991 | Aug. 16, 1991. |
| Sept. 3, 1991 | Sept. 10, 1991. |
| Oct. 1, 1991 | Oct. 8, 1991. |
| Oct. 22, 1991 | Oct. 29, 1991. |

If time permits, the committee will consider oral presentations relating to agenda items. Persons wishing to address the committee orally at a meeting should submit a written request to be heard by the deadline listed above for that particular meeting. The request must include the name and address of the person wishing to appear, the capacity in which the appearance will be made, a short summary of the intended presentation, and an estimate of the amount of time needed.

All communications regarding this committee should be addressed to the Point of Contact named above.

Office of Personnel Management.

**Constance Berry Newman,**

*Director.*

[FR Doc. 91-17140 Filed 7-17-91; 8:45 am]

BILLING CODE 6325-01-M

# Sunshine Act Meetings

Federal Register
Vol. 56, No. 138
Thursday, July 18, 1991

This section of the FEDERAL REGISTER contains notices of meetings published under the "Government in the Sunshine Act" (Pub. L. 94-409) 5 U.S.C. 552b(e)(3).

## FEDERAL ELECTION COMMMISSION

**DATE AND TIME:** Tuesday, July 23, 1991, 10:00 a.m.

**PLACE:** 999 E Street, N.W., Washington, D.C.

**STATUS:** This Meeting Will Be Closed to the Public.

**ITEMS TO BE DISCUSSED:**

Commpliance matters pursuant to 2 U.S.C. § 437g.
Audits conducted pursuant to 2 U.S.C. § 437g, § 438(b), and Title 26, U.S.C.
Matters concerning participation in civil actions or proceedings or arbitration.
Internal personnel rules and procedures or matters affecting a particular employee.

**DATE AND TIME:** Thursday, July 25, 1991, 10:00 a.m.

**PLACE:** 999 E Street, N.W., Washington, D.C. (Ninth Floor).

**STATUS:** This Meeting Will be Open to the Public.

**ITEMS TO BE DISCUSSED:**

Advisory Opinion 1991-19: Gail L. Polivy on behalf of the GTE Corporation
Administrative Matters

**PERSON TO CONTACT FOR INFORMATION:** Mr. Fred Eiland, Press Officer, Telephone: (202) 376-3155.

**Delores Harris,**
*Administrative Assistant, Office of the Secretariat.*

[FR Doc. 91-17286 Filed 7-17-91; 8:45 am]

BILLING CODE 6715-01-M

## FEDERAL RESERVE SYSTEM

**TIME AND DATE:** 11:30 a.m., Wednesday, July 24, 1991.

**PLACE:** Marriner S. Eccles Federal Reserve Board Building, C Street entrance between 20th and 21st Streets, N.W., Washington, D.C. 20551.

**STATUS:** Closed.

**MATTERS TO BE CONSIDERED:**

1. Personnel actions (appointments, promotions, assignments, reassignments, and salary actions) involving individual Federal Reserve System employees.
3. Any items carried forward from a previously announced meeting.

**CONTACT PERSON FOR MORE INFORMATION:** Mr. Joseph R. Coyne, Assistant to the Board; (202) 452-3204. You may call (202) 452-3207, beginning at approximately 5 p.m. two business days before this meeting, for a recorded announcement of bank and bank holding company applications scheduled for the meeting.

Dated: July 16, 1991.

**Jennifer J. Johnson,**
*Associate Secretary of the Board.*

[FR Doc. 91-17276 Filed 7-17-91; 8:45 am]

BILLING CODE 6210-01-M

federal register

Thursday
July 18, 1991

# Part II

# Environmental Protection Agency

## 40 CFR Parts 141 and 142

## National Primary Drinking Water Regulations; Radionuclides; Proposed Rule

**ENVIRONMENTAL PROTECTION AGENCY**

**40 CFR Parts 141, 142**

**[WH-FRL 3956-4]**

**RIN 2040-AA94**

## National Primary Drinking Water Regulations; Radionuclides

**AGENCY:** Environmental Protection Agency.

**ACTION:** Notice of proposed rulemaking.

**SUMMARY:** In this action under the Safe Drinking Water Act (as amended in 1986), the Environmental Protection Agency (EPA) is proposing Maximum Contaminant Level Goals (MCLGs) and National Primary Drinking Water Regulations for the following radionuclides: radon-222, radium-226, radium-228, uranium, alpha emitters, and beta particle and photon emitters. These radionuclides are classified as group A human carcinogens according to EPA's classification scheme; also, uranium is toxic to the kidneys. This notice proposes MCLGs, Maximum Contaminant Levels (MCLs), monitoring, reporting, and public notification requirements for these radionuclides.

**DATES:** Written comments should be submitted by October 16, 1991. A public hearing will be held on September 6, 1991 in Washington, DC beginning at 9 a.m. A second public meeting will be held on September 12, 1991 in Chicago, Illinois at 9 a.m. Washington hearing speakers should register by August 23. Chicago hearing speakers should register by August 30.

**ADDRESSES:** Send written comments to Comments Clerk—Radionuclides, Drinking Water Standards Division, Office of Ground Water and Drinking Water (WH-550D), Environmental Protection Agency, 401 M Street, SW., Washington, DC 20460. A copy of all public comments and supporting documents for this proposed regulation will be available for review at EPA, Ground Water and Drinking Water Docket, 401 M Street, SW., Washington, DC 20460. For access to the docket materials, call 202-382-3027 between 9 a.m. and 3:30 p.m. Commenters are requested to submit one original and three copies of their written comments. Commenters who wish to receive acknowledgement of receipt of their comments should include a self addressed stamped envelope. All comments must be post marked or delivered by hand by October 16, 1991. No facsimiles (faxes) will be accepted, as EPA is not equipped to receive the large volume of comments expected to arrive near the close of the comment period, and cannot assure that faxes will be delivered to the docket. Major supporting documents cited in the reference section of the proposed rule will be available for inspection at the Drinking Water Supply Branches in EPA's Regional Offices listed below:

I. JFK Federal Bldg., (One Congress Street, 11th floor), Boston, MA 02203, Phone: (617) 565-3610, Jerome Healey
II. 26 Federal Plaza, Room 824, New York, NY 10278, Phone: (212) 264-1800, Walter Andrews
III. 841 Chestnut Street, Philadelphia, PA 19107, Phone: (215) 597-9873, Dale Long
IV. 345 Courtland Street, Atlanta, GA 30365, Phone: (404) 347-3633, Wayne Aeronson
V. 230 S. Dearborn Street, Chicago, IL 60604, Phone: (312) 353-2650, Ed Watters
VI. 1445 Ross Avenue, Dallas, TX 75202, Phone: (214) 655-7155, Thomas Love
VII. 726 Minnesota Avenue, Kansas City, KS 66101, Phone: (913) 236-2815, Ralph Langemeir
VIII. One Denver Place, 9999 18th Street, Suite 1300 Denver, CO 80202-2413, Phone: (303) 293-1424, Patrick Crotty
IX. 75 Hawthorne Street, San Francisco, CA 94105, Phone: (415) 974-8073, Bruce Macler
X. 1200 Sixth Avenue, Seattle, WA 98101, Phone: (206) 442-1225, Jan Hastings

Public hearings will be held in the following locations;

Washington DC—Crystal City Marriott Hotel, 1111 Jefferson Davis Highway, Arlington, VA

Chicago, Illinois—J.C. Kluczynski Federal Building, 230 Dearborn Street, 16th Floor, Chicago, IL

Members of the public who plan to make a statement at either public hearing should contact Danesha Reid to register, EPA (WH-550D), 401 M Street, SW., Washington, DC 20460, telephone (202) 382-7575. Unregistered speakers will be heard after all registered speakers have made their statements.

**FOR FURTHER INFORMATION CONTACT:** The Safe Drinking Water Hotline, telephone (800) 426-4791, or Gregory Helms, Drinking Water Standards Division, Office of Ground Water and Drinking Water (WH-550D), Environmental Protection Agency, 401 M Street, SW., Washington, DC 20460, telephone (202) 382-7575.

### Abbreviations Used in This Notice

BAT: Best Available Technology
BEIR: Committee on the Biological Effects of Ionizing Radiation
CWS: Community Water System
EMSL: EPA Environmental Monitoring and Support Laboratory (Cincinnati or Las Vegas)
ede: effective dose equivalent
GAC: Granular Activated Carbon
ICRP: International Commission on Radiation Protection
MCL: Maximum Contaminant Level
MCLG: Maximum Contaminant Level Goal
MDL: Method Detection Limit
Mr/hr: milliroentgen per hour
mgd: Million Gallons/Day
mrem/yr: millirem/year
NIPDWR: National Interim Primary Drinking Water Regulation
NPDWR: National Primary Drinking Water Regulation
NTNC: Non-transient, non-community water system
pCi/1: picocurie/liter
POE: Point-of-Entry Technologies
POU: Point-of-Use Technologies
PQL: Practical Quantitation Level
PTA: Packed Tower Aeration
PWS: Public Water System
Ra-226: Radium-226
Ra-228: Radium-228
RIA: Regulatory Impact Analysis
Rn-222: Radon-222, or radon
SDWA: Safe Drinking Water Act, or the "Act", as amended in 1986
SMR: Standard Mortality Ratio
WLM: Working Level Month

### Table of Contents

I. Summary of Today's NPRM
II. Background
A. Statutory Authority and Requirements
1. MCLGs, McLs and BAT
2. Variances and Exemptions
3. Primacy
4. Monitoring, Quality Control, and Recordkeeping
5. Public Notification
B. Applicability
C. Regulatory Background
D. Comments by the Science Advisory Board and the Public on the ANPRM
1. SAB Comment
a. General comments and generic issues
a.1. General comments and generic issues.
b. Responses to the five specific questions
c. Comments on important issues in the criteria documents
2. Public Comment on the ANPRM
E. Other EPA Radon and Radiation Programs
F. Basics of Radiation
III. Occurrence and Exposure
A. Radium-226
B. Radium-228
C. Radon
1. Occurrence
2. Assessing individual radon exposure from inhalation and ingestion
D. Uranium
E. Beta and Photon-Emitting Radionuclides
F. Alpha-Emitting Radionuclides
IV. Proposed MCLGs for Radionuclides
A. Setting MCLGs
B. Estimating Health Risks for Radionuclides
C. Adverse Health Effects of the Radionuclides
1. Radium-226 and Radium-228
2. Radon

a. Radon Risks from Inhalation
b. Radon Risk via Ingestion
3. Uranium
a. Carcinogenicity
b. Non-cancer Effects
4. Beta Particle and Photon Emitters
5. Alpha Emitters
D. MCLG Determinations
V. Proposed Maximum Contaminant Levels
Summary of the Proposal
A. BATs and Associated Costs
B. Best Available Technologies (BATs)
1. Radium-226 and Radium-228
a. Lime Softening
b. Ion Exchange
c. Reverse Osmosis
2. Radon
a. Aeration
b. Secondary Effects of Aeration: Estimate of Risks from PTA Emissions of Radon
c. Granular Activated Carbon
3. Uranium
a. Coagulation/Filtration
b. Ion Exchange
c. Lime Softening
d. Reverse Osmosis
4. Beta and Photon Emitters
5. Alpha Emitting Radionuclides
C. Waste Treatment and Disposal
D. Analytic Methods
1. Description of Analytic Methods
2. Cost of Performing Analyses
3. Method Detection Limits and Practical Quantitation Levels
E. Laboratory Approval and Certification
1. Background
2. Acceptance Limits for Radionuclide Contaminants
F. Proposed MCLs and Alternatives Considered
G. Proposed Monitoring and Reporting Requirements
H. State Implementation
I. Variances and Exemptions
1. Variances
2. Exemptions
3. Unreasonable Risks to Health (URTH)
VI. Public Notice Requirements
VII. Economic Impacts and Benefits
A. Regulatory Flexibility Analysis
B. Paperwork Reduction Act
VIII. References
Appendix A—Fundamentals of Radioactivity in Drinking Water
Appendix B—Beta Particle and Photon Emitters
Appendix C—Alpha Emitters

## I. Summary of Today's NPRM

### *Applicability*

The regulations proposed in this notice would apply to all community and all non-transient, non-community public water systems. The proposed regulations would not apply to private water supplies (i.e., systems serving fewer than 25 persons).

### *Proposed MCLGs and MCLs*

| | MCLG | MCL |
|---|---|---|
| 1 Radium-226 | zero | 20 pCi/1. |
| 2. Radium-228 | zero | 20 pCi/1. |
| 3. Radon-222 | zero | 300 pCi/1. |
| 4. Uranium | zero | 20 μg/1 (30 pCi/1). |
| 5. Beta and photon emitters (excluding Ra-228). | zero | 4 mrem ede/yr. |
| 6. Adjusted gross alpha emitters (excluding Ra-226, U, and Rn-222). | zero | 15 pCi/1. |

**Note:** EPA recognizes that most radionuclides emit more than one kind of radiation as they decay. The lists of compounds labeled "alpha" or "beta" emitters identifies the predominant mode of decay.

**Note:** In this document the unit mrem ede/yr refers to the dose committed over a period of 50 years to reference man (ICRP 1975) from an annual intake at the rate of 2 liters of drinking water per day.

### *Proposed BATs Under Section 1412 of the SDWA*

Radium 226/228: Ion exchange, lime softening, reverse osmosis
Radon: Aeration
Uranium: Coagulation/filtration, ion exchange, lime softening, reverse osmosis
Beta and photon emitters: Ion exchange, reverse osmosis
Alpha emitters: Reverse osmosis

### *Proposed BAT Under Section 1415 of the SDWA*

The same as BAT under Section 1412. Coagulation and filtration and lime softening are not BAT for small systems (those with <500 connections) for the purpose of granting variances because they are not technologically feasible for small systems.

### *Proposed Compliance Monitoring*

(a) The proposed initial monitoring requirements for radon are:

(1) For ground water systems and mixed ground and surface water systems, four consecutive quarterly samples for one year, and then annual samples for the remainder of the first three year compliance period. States could grant monitoring waivers to systems that demonstrate compliance with the MCL reliably and consistently in the initial compliance period, allowing systems to collect only one sample per three year compliance period for the remainder of the nine year compliance cycle. Systems relying solely on surface water are not required to monitor for radon, because radon is a highly volatile gas and is not expected to be found in surface water. Laboratories would be expected to accurately measure radon down to levels of 300 pCi/l at the time of sampling.

(2) Systems that violate the MCL would be required to monitor quarterly until the average of four consecutive quarterly samples is below the MCL.

(b) The proposed monitoring requirements for gross alpha, radium-226 and uranium are:

(1) Three annual gross alpha screens, to be initiated in the compliance period starting January 1996; if gross alpha is less than the MCLs for radium-226, uranium, and adjusted gross alpha, screening would be reduced to monitoring once per three year compliance period. Laboratories would be expected to measure radium 226 and uranium down to 5 pCi/l and gross alpha down to 15 pCi/l.

(2) If gross alpha exceeds the radium-226, uranium, or adjusted gross alpha MCLs, specific analysis for uranium and/or radium-226 must be conducted. If the contaminant-specific analyses show that the radium-226 or uranium MCL was exceeded, quarterly monitoring for that contaminant is required. If neither MCL is exceeded, monitoring for radium-226 and uranium (or gross alpha screen in lieu of radium or uranium) may be reduced to one sample every 3-year compliance period after 3 annual samples. Sampling may be reduced to one sample every 9-year compliance cycle if the state finds, through a monitoring waiver, that the system meets the MCL reliably and consistently.

(3) Systems that violate the MCL would be required to monitor quarterly until four consecutive quarterly samples is below the MCL.

(c) The proposed monitoring requirements for radium-228 are as follows: Three annual radium-228 analyses would be required; if the radium-228 MCL is exceeded, quarterly monitoring would be required. If the system is consistently below the MCL, then the annual period may be reduced to one sample per three year compliance period. Monitoring may be further reduced to once every 9-year compliance cycle by the issuance of a monitoring waiver if the state finds that the system meets the MCL reliably and consistently. A gross beta test may be used as a screen for radium 228. Systems that violate the MCL would be required to monitor quarterly until four consecutive quarterly samples is below the MCL.

(d) Gross beta monitoring. Only supplies deemed vulnerable to contamination would be required to monitor for beta and photon emitters. Vulnerable systems would be required to measure gross beta quarterly and tritium and strontium annually. The presumptive screen for compliance with the MCL would be 50 pCi/l. Because

only vulnerable systems would be required to monitor, no reduction in monitoring would be allowed. Systems that violate the MCL would be required to monitor monthly until three consecutive samples is below the MCL.

(e) Systems having historical data that has been collected in accord with the analytic chemistry requirements may use the data to determine compliance.

*Point-of-use (POU) devices, point-of-entry (POE) devices and bottled water*

POE would be allowed to be used to achieve compliance with MCLs; however, POE would not be BAT.

POU and bottled water would not be allowed to be used to achieve compliance with the MCLs; however, either could be, at State discretion, a condition of granting a variance or exemption, except for radon (POU may not be used for radon because POU fails to address radon risks).

*Variances and Exemptions*

Primacy States may require public water systems to implement additional interim control measures such as installation of additional centralized treatment or POU devices or distribution of bottled water to each customer as measures to reduce the health risk before granting a variance or exemption. The State may not issue a variance or exemption if an unreasonable risk to health exists, as determined by the State using EPA guidance. States must require public water systems to provide POE/POU devices, bottled water or other means, as appropriate to the risks present (i.e., no POU or bottled water for volatile contaminants, such as radon), to reduce exposure below unreasonable risk to health values before granting a variance or exemption. EPA is presently developing guidance for determining affordability to systems serving fewer than 3300 people of different water treatments, for purposes of granting variances. This guidance is expected to be proposed later this year.

## II. Background

### *A. Statutory Authority and Requirements*

Section 1412 of the Safe Drinking Water Act, as amended in 1986 ("SDWA" or "the Act"), requires the Environmental Protection Agency (EPA) to publish Maximum Contaminant Level Goals (MCLGs) and promulgate National Primary Drinking Water Regulations (NPDWRs) for contaminants in drinking water which may cause any adverse effect on the health of persons and which are known or anticipated to occur in public water systems. Under section 1401, the NPDWRs are to include Maximum Contaminant Levels (MCLs) and "criteria and procedures to assure a supply of drinking water which dependably complies" with such MCLs. Under section 1412(b)(7)(A), if it is not economically or technically feasible to ascertain the level of a contaminant in drinking water, the NPDWR may require the use of a treatment technique instead of an MCL.

Under section 1412(b), EPA is to establish MCLGs and promulgate national primary drinking water regulations for 83 contaminants in public water systems. The radionuclides included in today's proposal are among these 83 contaminants.

#### 1. MCLGs, MCLs and BAT

Under section 1412(b)(4) of the Act, EPA is to establish MCLGs at the level at which no known or anticipated adverse effects on the health of persons occur and which allow an adequate margin of safety. MCLGs are non-enforceable health goals based only on health effects and exposure information.

MCLs are enforceable standards which the Act directs EPA to set as close to the MCLGs as is feasible. "Feasible" means feasible with the use of the best technology, treatment techniques, and other means which the Administrator finds available (taking cost into consideration) after examination for efficacy under field conditions and not solely under laboratory conditions (SDWA section 1412(b)(5)). Also, the SDWA requires the Agency to identify the best available technology (BAT) for meeting the MCL for each contaminant.

#### 2. Variances and Exemptions

Section 1415 authorizes the State to issue variances from NPDWRs (the term "State" is used in this preamble to mean the State agency with primary enforcement responsibility, or "primacy," for the public water supply system program or EPA if the State does not have primacy). The State may issue a variance if it determines that a system cannot comply with an MCL despite application of the best available technology (BAT). Under Section 1415, EPA must propose and promulgate its finding identifying the best available technology, treatment techniques, or other means available for each contaminant, for purposes of section 1415 variances, at the same time that it proposes and promulgates a maximum contaminant level for such contaminant. EPA's finding of BAT, treatment techniques, or other means for purposes of issuing variances may vary, depending upon the number of persons served by the system or for other physical conditions related to engineering feasibility and costs of complying with MCLs, as considered appropriate by the EPA. The State may not issue a variance to a system until it determines that an unreasonable risk to health (URTH) does not exist. EPA has developed draft guidance, "Guidance in Developing Health Criteria for Determining Unreasonable Risks to Health" (EPA 1990k) to assist States in determining when an unreasonable risk to health exists. EPA expects to issue final guidance for determining when URTH levels exist later this year. When a State grants a variance, it must at the same time prescribe a schedule for (1) compliance with the NPDWR and (2) implementation of such additional control measures as the State may require.

Under section 1416(a), the State may exempt a public water system from any MCL and/or treatment technique requirement if it finds that (1) due to compelling factors (which may include economic factors), the system is unable to comply, (2) the system was in operation on the effective date of the MCL or treatment technique requirement, or, for a newer system, that no reasonable alternative source of drinking water is available to that system, and (3) the exemption will not result in an unreasonable risk to health. Under section 1416(b), at the same time it grants an exemption the State is to prescribe a compliance schedule and a schedule for implementation of any required interim control measures. The final date for compliance may not exceed three years after the initial date of issuance of the exemption unless the public water system establishes that: (1) The system cannot meet the standard without capital improvements which cannot be completed within the period of such exemption; (2) the system has entered into an agreement to obtain financial assistance for necessary improvements; or (3) the system has entered into an enforceable agreement to become part of a regional public water system. For systems that serve 500 or fewer service connections and which need financial assistance to come into compliance, the State may renew the exemption for additional two-year periods if the system is taking all practicable steps to meet the above requirements.

#### 3. Primacy

As indicated above, States may assume primary enforcement responsibility (primacy) for public water

systems under section 1413 of the SDWA. To assume or retain primacy, States need not adopt the MCLGs but must adopt, among other things, NPDWRs that are no less stringent than those EPA promulgates. States may also, at their discretion, adopt standards more stringent than the NPDWRs.

4. Monitoring, Quality Control, and Recordkeeping

Under section 1401(1)(D) of the Act, NPDWRs are to contain "criteria and procedures to assure a supply of drinking water which dependably complies with such maximum contaminant levels; including quality control and testing procedures to insure compliance with such levels * * *." In addition, section 1445 (a)(1) states that "every person who is a supplier of water * * * shall establish and maintain such records, make such reports, conduct such monitoring and provide such information as the Administrator may reasonably require by regulation to assist him in establishing regulations * * * in evaluating the health risks of unregulated contaminants, or in advising the public of such risks." Section 1445 also requires EPA to promulgate regulations requiring every public water system to conduct a monitoring program for unregulated contaminants, and EPA has established a number of specific requirements.

5. Public Notification

Section 1414(c) of the Act requires the owner or operator of a public water system which fails to comply with an applicable maximum contaminant level or treatment technique requirement, testing procedure, or section 1445(a) monitoring requirement to give notice to the persons served by the water system. Owners and operators of public water systems for which variances or exemptions are in effect, or which fail to comply with the requirement of any schedule assembled pursuant to a variance or exemption, must also give notice. Section 1445(a)(5) also requires public water systems to notify the persons served by the water system and the Administrator of the EPA of the availability of the results of monitoring for unregulated contaminants. Public notification regulations are codified at 40 CFR 141.32.

*B. Applicability*

These proposed regulations would apply to all community water systems (CWSs) and all non-transient, non-community public (NTNC) water systems.

Public water systems are defined in the Act as those systems which provide piped water for human consumption and have at least 15 connections or regularly serve at least 25 people. Section 1401(1)(D)(4). The category "public water system" is composed of community and non-community water systems. A community water system is one which serves at least 15 connections used by year-round residents or regularly serves at least 25 year-round residents (40 CFR 141.2). Non-community systems, by definition, are all other public water systems. Non-community systems include transient systems (e.g., restaurants and service stations having independent water sources) and non-transient systems which EPA has defined as facilities that have their own water supply and regularly serve at least 25 of the same persons for at least six months a year (see 52 FR 25712, July 8, 1987).

Transient non-community water systems would not be covered by these proposed regulations. Environmental levels of these contaminants pose public health hazards over a long period of exposure. Occasional and infrequent exposure to environmental levels of these contaminants pose minimal risks to the public and do not warrant regulation under the SDWA.

EPA solicits public comment on the application of these regulations to community and non-community nontransient public water supplies.

*C. Regulatory Background*

In 1976, EPA promulgated the National Interim Primary Drinking Water Regulations (NIPDWRs) for combined radium-226 and radium-228 at 5 pCi/l, gross alpha particle emitters at 15 pCi/l, and beta particle and photon emitters (also referred to as the "man-made" radionuclides) at a total dose equivalent of 4 mrem/year to any organ or whole body (40 CFR 141.15). These levels are currently in effect and enforceable. When these NIPDWRs were developed, the Agency did not have sufficient health and occurrence data on uranium and radon to develop standards. Therefore, there are no existing primary drinking water regulations for these two radionuclides. As part of an effort to develop better information for these regulations, EPA sponsored a workshop on radioactivity in drinking water (Health Physics, 1985).

On September 30, 1986, EPA published an advance notice of proposed rulemaking (ANPRM), (51 FR 34836, Sept. 30, 1986) concerning the radionuclides contained in today's proposed action. The ANPRM discussed EPA's understanding of the occurrence, health effects, and risks from these radionuclides, as well as the available analytical methods and treatment technologies and sought additional data and public comment on EPA's planned regulation. This notice builds on and updates the information assembled for the 1986 ANPRM.

The information in the ANPRM on occurrence was estimated from the nationwide compliance data for the standards in place, several nationwide and regional studies, and State data bases. Although the occurrence data for uranium and radon were not as complete as for the other regulated radionuclides, the available data showed that uranium, radium, and radon are seldom found together in high concentrations. Relatively higher levels of radium were found in the midwest and Appalachian region, natural uranium in the Rocky Mountains, and radon in the northeast. When the ANPRM was published the available data indicated that radon and uranium generally were distributed at low levels in water supplies throughout the United States. In some areas, however, ground water supplies had much higher levels of radon. Compliance monitoring data on radium indicated moderate occurrence, primarily in the midwestern states. Beta particles and photon emitters were not detected above the 50 pCi/l screening levels.

The ANPRM summarized the types of cancer associated with each radionuclide, the toxic effects of uranium on the kidney, and the estimated annual national risks posed by each radionuclide in drinking water. Several analytical methods were mentioned and were presented along with treatment technologies and estimated costs.

*D. Comments by the Science Advisory Board and the Public on the ANPRM*

1. SAB Comment

The EPA's Science Advisory Board's (SAB) Radiation Advisory Committee (RAC) reviewed the ANPRM and the four draft criteria documents which supported it prior to publication of the ANPRM in the **Federal Register** (51 FR 34836; September 30, 1986). EPA subsequently revised the criteria documents and resubmitted them to the SAB/RAC for review during the summer of 1990. EPA has now revised the criteria documents based on this latest review (SAB/RAC, 1990) and presents a summary of the SAB/RAC comments and EPA's replies to them here. More detail on these issues may be found in the latest revised criteria documents themselves.

a. *General comments and generic issues.* In requesting review of the health criteria documents in 1990, the EPA requested the SAB/RAC to focus on five questions in their review, in addition to providing any additional comments the reviewers believed to be relevant. The five questions asked were:

1. Are the estimates of the absorption, distribution and excretion of uranium, when ingested, appropriate and supported by the data?

2. Do the estimates in the documents form an appropriate basis for assessing the risks of directly ingesting water containing radon?

3. What is an appropriate basis for estimating the risks from radon in water?

4. What relative emphasis should be placed on the epidemiology data and modeled risk estimates for evaluating radium risks?

5. Is the methodology for assessing risks from man-made radionuclides (both individually and collectively) appropriate?

The SAB/RAC reviewers also commented on the overall quality of the draft documents and commented on several additional subjects.

The SAB/RAC comments were organized as follows: General Comments and Generic Issues; Responses to the Five Specific Questions; and Comments on Important Issues in the Criteria Documents and Related Reports. EPA's replies to these comments follow the SAB/RAC organization, and are as follows:

a=1. *General comments and generic issues.*The SAB/RAC made the following general comments:

1. The general quality of the documents was not good.

*EPA Reply:* Full criteria documents, rather than only Quantification of Toxicological Effects sections, have been prepared, with careful review by ORP and ODW. Irrelevant information and incorrect definitions have been deleted, and definitive descriptions of the dosimetric models have been included in each Criteria Document. Except where noted in the Criteria Documents, the bases for selecting models is the same as those given by the ICRP in their publication ICRP 30 (ICRP 1979). Material on chemical and physical properties has been included, consistent with OW format for preparation of Criteria Documents. The five documents have been made consistent in their approaches to risk assessment. Comments by the SAB/RAC made during the 1987 review have been considered and addressed in the revised Criteria Documents. EPA believes 0 the overall quality of the revised documents is substantially improved, and will continue to udate the documents, as needed, between proposal and promulgation of this regulation.

2. Technical decisions contrary to SAB and NAS recommendations were presented without discussion of alternatives or justification for the Agency's choices.

*EPA Reply:* Detailed discussions are provided in the criteria documents of issues raised by the SAB, as indicated for document-specific comments below. The basis for adoption of SAB and NAS recommendations is presented in individual criteria documents and described briefly below. EPA's adoption of advice and guidance has attempted most appropriately resolve potentially conflicting recommendations, and strives to be consistent both internally and with other Federal Agencies in its assessments of radiation risks. EPA's modification of the ICRP dosimetric models is used for assessing doses and risks from radium, uranium and gross alpha emitters, and for estimating doses used in calculating the effective dose equivalent, which serves as the basis of the standard for beta and photon emitters.

3. Uncertainties were not adequately addressed.

*EPA Reply:* A new chapter has been added to each criteria document addressing uncertainties associated with the range of assumptions and models considered and those arising from parameter variability (chapter IX in each document).

b. *Responses to the five specific questions.*

1. Are the estimates of the absorption, distribution and excretion of uranium, when ingested, appropriate and supported by the data?

The SAB/RAC believed the absorption, distribution and excretion estimates presented in the draft uranium criteria document needed to be discussed in more detail and better supported by the criteria document. In particular, the SAB/RAC disagreed with use of 0.20 as the $f_1$ (gastrointestinal absorption factor) and cited a 1985 review sponsored by the EPA as recommending an $f_1$ value of 0.014. SAB/RAC also urged that the value chosen be identified as representing the average population or any special sensitive groups.

*EPA Reply:* EPA has extensively reviewed the literature available on this issue and believes that a value of 0.05 is appropriate. However, published studies present a wide range of possible values for the uranium uptake factor. While EPA believes a value of 0.05 is supportable based on the literature, the uncertainty associated with this value may be great, perhaps a factor of 4 greater or less than the value chosen. The basis for this uncertainty assessment is presented in the revised uranium health criteria document. EPA believes 0.05 to be a best estimate for the general population, and not a highly conservative value for the $f_1$ factor.

2. Do the estimates in the documents form an appropriate basis for assessing the risks of directly ingesting water containing radon?

The SAB/RAC urged EPA to better justify use of a fresh tap water consumption value of 0.66 liters/day, a value different than the 2 liters daily consumption usually used in assessing exposure to drinking water contaminants, and other assumptions about radon loss from water during consumption. The SAB/RAC also noted that the approach used for assessing the risks of radon in drinking water differs from that used for assessing risks from other volatile contaminants in drinking water.

*EPA Reply:* A separate document was prepared by EPA to describe the data available for both the selected rate of ingestion and for radon loss during water consumption, and the rationale for the selected values. Consistency with previous regulations of volatile contaminants in drinking water is also addressed. These points are summarized in the Radon Criteria Document (sections IV.C.1 and VIII.B.2) and the uncertainties are discussed in chapter IX of the Radon Criteria Document (section IX.B.1).

The available data on tap water consumption is presented in "Radon in Drinking Water: Assessment of Exposure Pathways" (EPA, 1991h). EPA continues to believe a value other than 2 liters per day is appropriate for assessing risks from ingested radon, and has used a value of 1 liter daily intake of fresh tap water, as a reasonable maximum, in the revised documents. EPA believes this is appropriate because radon is a volatile gas and will not be present in water used for cooking or making tea or coffee, or water that has been standing for some time. EPA has therefore estimated consumption of water that is promptly consumed, i.e. water drawn from the tap and consumed immediately, for assessing radon exposure via the ingestion route. EPA has previously used the 2 liter daily water consumption estimate in assessing risk for other volatiles in drinking water because no separate inhalation exposure and risk assessment was performed. The exposure to other volatile contaminants via ingestion

predicted by 2 liters daily consumption served as a surrogate to compensate for the lack of a separate inhalation exposure and risk assessment. Because there are data on the transfer of radon from water to the indoor air of homes, an exposure assessment by the inhalation route for radon derived from water can be made. EPA has estimated the inhalation exposure and risk and the ingestion exposure and risk resulting from radon in water separately, and added the two assessments together in estimating overall risks from radon in water. The radon exposure pathways document also describes the basis for estimating 20% loss of radon from water before it is consumed.

3. What is an appropriate basis for estimating the risks from radon in water?

The SAB/RAC asserted that use of a generic tap water to air transfer factor overlooks potential high radon concentrations at the point of release, such as during showering, and urged inclusion of such an exposure assessment in the revised documents. SAB/RAC stated that all contributions to total exposure should be considered, and that uncertainties in all the estimates must be addressed. SAB/RAC also stated that there were differences in the draft criteria document from a draft radon risk assessment previously submitted to SAB/RAC by EPA's ORP for review.

*EPA Reply*: An analysis of exposure to radon during showering and other household uses of water was performed by EPA and is presented in "Radon in Drinking Water: Assessment of Exposure Pathways" (EPA, 1991h). The analysis was summarized in the Radon Criteria Document (sections IV.C.2 and VIII.B.2) and the uncertainties are discussed in chapter IX of the Radon Criteria Document (sections IX.A.3 and IX.B.2).

This document reviews the available data and methods for evaluating inhalation exposure to radon released from water. These include several empirical studies as well as several modeled approaches to exposure assessment. EPA concluded in this analysis that although mass balance modeling can be performed for radon from showering and other water use, assessing risk based on this information is difficult. Human activity patterns are highly variable with regard to factors that have a large influence on exposure, such as temperature and length of shower, shower flow rate, timing of multiple showers within a household, and location and use of clothes washing machines. Also, significant unanswered questions remain about the equilibrium of radon with its progeny in the shower and bathroom, the unattached fraction, and aerosol particle size in a shower and behavior of water aerosols in the respiratory tract. Modeling does allow for risks from showers to be broadly bounded, and EPA has done so in its review. EPA concluded that integrated exposure and risk estimates developed from modeled water use through out the house (including showering) differ only slightly from the results obtained from use of an average water to air transfer factor such as 10,000:1 (i.e., 10,000 pCi/1 radon in water increases indoor air levels by about 1 pCi/1), based on the empirical data.

In response to the final point of the SAB/RAC, there is no overall quantitative difference in the risk assessment presented in the draft Radon Health Criteria Document and the draft submitted to the SAB for review in February of 1990. Both present the average unit risk value of 360 deaths per $10^6$ working level months of exposure to radon and its progeny, in air, as a central estimate, consistent with EPA's letter of November 23, 1988 (EPA, 1988f) to the SAB/RAC, which first used this as the unit risk for radon. The source of disagreement was apparently the lack of separate presentation of risks to smokers and nonsmokers. Risks to smokers and non-smokers were not presented separately and in detail as in the February 1990 paper. EPA has added this discussion to the revised Radon Criteria Document (sections VI.C and VIII.B.2, Table VI-1). The preparation of the Radon Criteria Document was coordinated with the evolving ORP position on indoor radon risks to the extent the regulatory and review schedules allowed, and EPA will continue to update the document, as needed, between proposal and promulgation of the final rules.

4. What relative emphasis should be placed on the epidemiology data and modeled risk estimates for evaluating radium risks

The SAB/RAC urged EPA to base its risk assessment for radium on human epidemiology data on radium watch dial painters, rather than on modeled estimates, and urged EPA to present its rationale for adopting the modeling approach for radium risk assessment. The SAB/RAC also requested that EPA better describe its dosimetric model in the revised criteria document, including calculated doses and risks to organs, and that if EPA continued to use the modeling approach, uncertainties in the modeling be addressed.

*EPA Reply:* The Agency carefully reconsidered this issue. First it should be pointed out that all risk estimates are based on both epidemiologic data and require mathematical modelling. The EPA uses the wealth of epidemiologic data on human exposure and risk of radiogenic cancers, including radium dial painters and epidemiologic data on bone sarcomas resulting from injected Ra-224.

The watch dial painter data indicate that the incidence of bone sarcomas may follow a dose-squared response, especially at higher exposures. EPA policy, supported by recommendations of SAB/RAC, is to assess cancer risks from ionizing radiation as a linear response. Therefore, use of the dial painter data requires either deriving a linear risk coefficient from significantly non-linear exposure-response data, or abandoning EPA policy and SAB/RAC advice in this case. Two analyses were recommended as alternatives by the SAB/RAC, those of Mays et al. (1985) and of Schlenker (1982). Both analyses used the same cohorts, calculated doses and definitions of incidence, and differed primarily in the statistical approach to deriving a linear slope that would not be rejected by the epidemiology data. The two resulting values differ by about 60%. EPA was not able to determine whether this degree of agreement resulted from the use of identical data, but took into account the caution of the BEIR IV Committee (NAS, 1988) that there was no unique way to derive a linear risk coefficient for bone sarcomas from the dial painter data.

There are, however, serious problems in applying the watch dial painter epidemiologic data. These include uncertainties in intake, due to variability in retention of radium and to lack of measurement of Ra-228. There may also be uncertainty in these data due to possible bias in identification and measurement of workers, and the lack of a unique way to specify the appropriate extrapolation of the observed quadratic response among workers at high intakes with known abnormal bone physiology to a linearized response consistent with the lack of observed sarcomas among lower-intake cohorts. There may also be problems in extrapolating to continuous intakes across years from a single intake, and in assessing latency and duration of plateau based on the radium-224 data. The dial painter data and the issues involved in extrapolation are extensively discussed in the Radium Criteria Document (sections III.B, VI.B.1, VIII.B.2, IX.A.1 and IX.A.2, Tables VI-1 to VI-3, VIII-1 and VIII-2), and a thorough discussion of the RADRISK model has been incorporated (sections III.D, VII.B, VIII.B.2, IX.A.2 and IX.B.2, Tables III-1 and VIII-3 to VIII-5).

An alternative to the dial painter data for deriving a linear coefficient is the experience with patients injected with a short lived isotope of radium. The BEIR III committee (NAS, 1980) found that these epidemiology data were consistent with a linear relationship between dose and bone sarcoma incidence, and derived a linear risk coefficient. Because of the difference in the toxicokinetics between the short-lived and the long-lived isotopes of radium, modelling is required to use the BEIR III risk coefficient. The use of models introduces some uncertainty into the assessment of risk but has the advantage that differing patterns of exposure can be evaluated (e.g. constant lifetime exposure).

The RADRISK model (Sullivan et al., 1981; Dunning et al., 1980; EPA, 1989a) used by EPA to assess risk from radionuclides also allows calculation of radiologic doses to and cancer risks in organs other than bone, based on epidemiology data on cancer risks from several studies of effects of ionizing radiation.

One concern the SAB/RAC had with this model was that the predicted incidence of leukemias was higher than observed in the dial painter cohorts. EPA reexamined this prediction and revised the calculation of the high-LET radiation risk to bone marrow to be more consistent with the predictions of the watch dial painter study and the observations in the spondylitic and Thorotrast studies. The predictions of the RADRISK model were adjusted to give a relative incidence of leukemias and bone sarcomas more consistent with observed data, which is also more consistent with the watch dial painter data (as described in section VIII.B.2, Table VIII-5 of the revised criteria document). Data on the leukemia incidence reported in patients injected with Thorotrast, a thorium-based radiologic contrast agent were also examined (NAS 1988). EPA has also added head carcinoma risk to the model (for radium-226), consistent with the watch dial painter studies.

As a result of this reconsideration EPA continues to incorporate the estimate of the bone sarcoma risk coefficient derived from epidemiology data that show a linear dose-response curve (the data for radium-224), a revised bone marrow risk coefficient and hence leukemia risk, and has added a risk coefficient for radium-226 induced head carcinomas. These issues and EPA's conclusions are discussed in the revised radium health Criteria Document, and as requested by SAB/RAC, an expanded description of the RADRISK model and assessment of uncertainties have been added.

5. Is the methodology for assessing risks from man-made radionuclides (both individually and collectively) appropriate?

The SAB/RAC urged EPA to include risks from man-made alpha emitters as well as beta emitters, urged use of EPA "official" risk estimates, and urged that the results be presented without reference to likely regulatory levels.

*EPA Reply:* EPA has revised its risk assessment numbers to correspond to previous estimates generated by the RADRISK model, and will incorporate any revisions based on the recommendations of the BEIR V report only after SAB/RAC has had an opportunity to review and comment on them as a separate issue and not in the context of this proposed regulation. Similarly, only unit risk and dose assessments are presented in the revised criteria document, without reference to possible regulatory levels.

c. *Comments on important issues in the criteria documents.* SAB/RAC also made the following comments on the draft Criteria Documents:

i. *Uranium criteria document.* 1. The document fails to explain selective adoption of the recommendations of the BEIR IV report, in particular the BEIR IV use of analogy with radium as the basis for risk evaluation of uranium, and the BEIR IV conclusion that any cancer risk from uranium is from bone sarcoma, not other organs as predicted by the EPA model.

*EPA Reply:* For a number of reasons discussed above, EPA has continued to rely on its risk model for assessing radium cancer risks, and uses this approach for assessing uranium cancer risks as well. EPA, like the ICRP, evaluates dose and risk for a number of organs and tissues and combines them as appropriate to obtain the risk estimate. EPA believes that all emitters of ionizing radiation are carcinogenic. EPA has reviewed and revised a key parameter value used in this model, the $f_1$ value, according to SAB/RAC recommendations, and has also revised the predicted risks of leukemia, as described above for radium, and the risks to kidney. These revisions are discussed in greater detail in sections IV and VIII of the revised uranium Criteria Document.

2. The uncertainty in the risk assessment for uranium must be discussed.

*EPA Reply:* An analysis of the uncertainties in the uranium cancer risk estimate has been prepared and is presented in section IX of the revised uranium Criteria Document.

3. If a modeled approach is chosen, EPA must justify selection of the models and parameter values, in particular the $f^1$ value of 0.20 used in the draft criteria document, and the work of Wrenn et al. (1985) and Spencer et al. (1990; as cited in EPA, 1991e) must be addressed. Quality of the data and the possible effect of diet and eating habits on the uptake of uranium must be considered.

*EPA Reply:* As discussed above, EPA has reviewed and revised the $f_1$ value used in estimating uranium risks. The work of Wrenn et al., and Spencer et al., were considered in this review. Evaluation of the data quality and the possible effect of diet and habits, i.e., iron deficiency and the "no-breakfast syndrome," are presented in the uncertainty discussion of the revised Uranium Criteria Document.

4. Comments and recommendations of the 1987 Drinking Water Subcommittee review have not been incorporated into the document, and the document includes irrelevant information (on inhalation studies) and some incorrect definitions.

*EPA Reply:* EPA has reviewed the comments made by the 1987 Committee review, and addressed those that remain pertinent to the revised documents. Studies by exposure routes other than ingestion have been included in the Criteria document, where those studies indicate systemic effects and especially where data by the ingestion route are sparse. Terms and definitions have been reviewed and corrected where found to be incorrect.

ii. Radium criteria document. 1. Extrapolation of risk from dial painter data.

*EPA Reply:* This issue is addressed in question number 4 above.

2. Uncertainties are not adequately addressed.

*EPA Reply:* EPA has added an assessment of the uncertainties in the risk evaluations to all of the revised Criteria Documents.

3. The estimate of radium absorption from Maletskos et al. (1966) should be discussed further and uncertainties addressed.

*Response:* The discussion has been expanded (section III.A) and uncertainties are addressed (section IX.B.1).

4. The issue of sensitivity of children to non-cancer effects of radium should be revised.

*Response:* This recommendation was followed (sections III.B, VI.C, VIII.A and IX.A.1).

5. The RADRISK model should be described in more detail, and the over-prediction of leukemias, lack of prediction of head carcinomas, and relative risks of Ra-226 and Ra-228 should be addressed.

*EPA Reply:* This recommendation was followed (sections III.D, VII.B, VIII.B.2, IX.A.2 and IX.B.2, Tables III–l and VIII–3 to VIII–5 of the radium Criteria Document). As described above, the estimates of leukemia risk for radium 226 and 228 have been revised and the head carcinoma risk for radium-226 added, consistent with the watch dial painter data. Organ doses and risks to bone and other organs are also presented. On review, EPA discovered an error in the estimated radium-228 dose to bone marrow and bone surface, and has revised the dose, and hence risk estimate for radium-228 to be consistent with the dose estimated by the ICRP 30 model (EPA, 1991b). It should be noted that the 2.5 fold higher potency of radium-228 in inducing bone sarcomas among the watch dial painters relates to an instantaneous intake of radium, and less of a difference would be expected for continuous lifetime exposure (Rowland et. al., 1978).

iii. *Documents related to radon.* 1. Inconsistencies in the relative conservativeness of the assumptions across the criteria documents for radionuclides and with regulation of other volatile chemicals in water should be addressed.

*EPA Reply:* Parameter values used in the criteria documents have been reviewed and are now more consistent with regard to their degree of conservativeness.

As discussed above, radon is the first drinking water contaminant for which the inhalation pathway is specifically addressed as a separate exposure pathway. This involves adjusting the ingestion risk downwards to account for loss of radon from tap water used for cooking and in other ways that would cause radon loss (making coffee, tea, etc.) and also separately quantifying inhalation exposure from all household uses of water. The Agency made an extensive analysis of the exposure to radon by ingestion and by inhalation of radon released from household uses of water, including short-term exposure during showering. This analysis is presented in a separate document (EPA 1991h) and summarized in the Radon Criteria Document (sections IV.C.1, IV.C.2, VIII.B.2, IX.A.3, IX.B.1 and IX.B.2).

2. Uncertainties should be discussed, particularly of variability of important parameters in the risk assessment.

*Response:* Chapter IX of the Radon Criteria Document addresses uncertainties both from the range of assumptions and models and from parameter variability.

3. The discussion of radon health risks should be updated and made consistent with the ORP approach, and the appendix discussions of non-cancer health effects of radiation exposure should be omitted.

*EPA Reply:* The discussion of miner data, including Lubin et al. (1990, as cited in EPA, 1991c), has been updated (Radon Criteria Document section VI.B.2) and risks of inhaled radon decay products have been listed separately for smokers and nonsmokers (sections VI.C and VIII.B.2, Table VI–1). Genetic effects are discussed in the Radon Criteria Document (sections VI.B.1, VI.B.2, VIII.C, IX.A.4 and IX.B.3, Tables VIII–7 to VIII–9) because these may be relevant in the context of radon in drinking water.

4. The basis for the rate of consumption of tap water and the loss of radon should be presented and defended.

*EPA Reply:* This has been done in a separate document (EPA 1991h) and summarized in the Radon Criteria Document (sections IV.C.1, VIII.B.2 and IX.B.1).

5. The basis for the selection of the transfer factor for waterborne radon contribution to indoor air radon levels should be presented and defended.

*Response:* This has been done in a separate document (EPA 1991h) and summarized in the Radon Criteria Document (sections IV.C.2, VIII.B.2 and IX.A.3 and IX.B.2).

6. The daily acute exposure from showering should be considered, including the degree of radon equilibrium.

*EPA Reply:* This has been done in a separate document (EPA 1991h) and summarized in the Radon Criteria Document (sections IV.C.2, VIII.B.2 and IX.A.3 and IX.B.2).

7. Additional analysis of the ingestion model by Crawford-Brown (1990) would be useful, including extending the analysis of uncertainty.

*EPA Reply:* The analysis of uncertainty in radon ingestion risks is extended in the Radon Criteria Document (sections IX.A.2 and IX.B.1). The model of Crawford-Brown (1990), which has been published in peer-reviewed journals (*Risk Anal.* 11:135–143, 1991), was considered to be the best analysis available for assessing risks of ingested radon.

8. The document should not contain incorrect definitions of fundamental technical terms or basic fallacies.

*EPA Reply:* The Radon Criteria Document has undergone extensive internal Agency review to correct inaccurate terminology.

iv. *Manmade Radionuclides Document.* 1. The document on manmade radionuclides used risk factors inconsistent with the other radionuclides discussed here and used an ad hoc extrapolation of risk factors based on an assessment of the BEIR V report that has not been submitted for review by the SAB, in spite of a previous agreement to do so.

*EPA Reply:* As described above, EPA's established risk factors have been used in the revised Criteria Document. Use of risk factors based on the BEIR V report will be delayed until EPA has reviewed these with the SAB/RAC in a separate evaluation.

2. The evaluation of risks should be based on the ICRP effective dose equivalent concept.

*EPA Reply:* EPA has used its own dosimetric model (the RADRISK model), based to a large degree on ICRP models and parameters, in the revised criteria document on beta and photon emitters.

3. The document should define the potential risks of exposure, rather than define the regulatory value of 4 mrem ede/yr.

*EPA Reply:* The revised beta and photon emitter Criteria Document assesses risks and does not present a regulatory value. Regulatory values for the beta and photon emitters, based on the unit risks in the Criteria Document, are presented in appendix B of this notice.

4. The document fails to adequately discuss uncertainties associated with the values of parameters selected and overall uncertainty of the evaluation.

*EPA Reply:* An assessment of the uncertainties in the risk estimates has been added to each of the Criteria Documents.

5. Tables A–1 and V–1 are misleading or difficult to understand as presented.

*EPA Reply:* These tables have been revised to clarify the information presented in them.

2. Public Comment on the ANPRM

EPA requested comments on all aspects of the September 30, 1986 ANPRM. A summary of the major comments, and the Agency's response to the issues raised, are presented below. A detailed enumeration of the comments received and the Agency's responses is presented in the document "Response to Comments Received on the NPDWRs: Radionuclides in Drinking Water—Advanced Notice for Proposed Rulemaking of September 30, 1986,"

(EPA, 1991j) which is available in the public docket for this rulemaking.

EPA received 44 written comments on the ANPRM. Of the comments received, 2 were from individuals, 2 were from Federal agencies, 11 were from States, 3 from local governments, 15 were from companies, 4 were from public water supplies and 8 were from public or professional organizations.

EPA held a public hearing on November 13, 1986. Representatives of a professional organization and of a company each made a statement and two local government representatives reported on levels of radionuclides in their water.

Because some of EPA's approaches to risk evaluation and regulation have been revised since 1986, some of the comments and issues are addressed only in the comment response document. Those still considered significant are discussed here.

a. *EPA's proposal to set a MCLG and MCL for natural uranium.* A total of 16 commenters addressed EPA's advanced notice for regulating uranium. Commenters raised four major issues regarding the uranium regulation:

(1) Toxicity Versus Carcinogenicity
(2) No-Observed-Adverse-Effect-Level
(3) Risk Estimates
(4) Economic Impact

(1) Uranium toxicity versus carcinogenicity

*Comments:* Ten commenters questioned EPA's proposal on the basis of insufficient scientific evidence to show that natural uranium is a carcinogen. One commenter disagreed with EPA's rationale to regulate uranium based on similarities to radium and another maintained that EPA's comparison of radium and uranium was flawed because EPA ignored the fact that uranium will expose tissues at a much lower dose and dose rate. In support of EPA's proposal, one commenter urged EPA to set MCLGs at zero because of the lack of available data on the radiotoxic effects of uranium and because of similarities between radium and uranium.

*EPA Response:* Uranium, like radium, is a source of ionizing radiation which decays and emits alpha particles internally, thereby irradiating internal tissues. Uranium also concentrates in bone as does radium, and kidney. Ionizing radiation has been shown in many studies to be carcinogenic in humans and EPA has classified it as a group A carcinogen. Uranium has caused cancers at multiple sites in laboratory animals, as would be expected from a source of ionizing radiation. Furthermore, the human carcinogenic risk from ingested radium is well-established (EPA, 1991b). For these reasons, the Agency is proposing to establish an MCLG for natural uranium based on it being a carcinogen. Uranium also is believed to be toxic to the kidneys, and below, EPA discusses exposure levels that would be considered safe for this adverse effect. In setting a standard, EPA will ensure that the eventual MCL is protective for both the carcinogenic potential of uranium and for kidney toxicity. For the purposes of this rule the MCL is based on uranium's potential for kidney damage.

*Comment:* One commenter stated that information presented at the National Workshop for Radioactivity in Drinking Water held in May 1983, indicated that carcinogenic risks were negligible from uranium, as well as from radium and radon.

*EPA Response:* The risk level estimated in the 1983 Workshop on uranium was $6 \times 10^{-7}$ per pCi/l lifetime cancer risk (Mays et al., 1985). Since the 1983 Workshop, EPA has continued to assess the hazards of all the contaminants in this proposed rule. The Agency still believes the risk from uranium to be approximately $6 \times 10^{-7}$ per pCi/l (EPA, 1991e). EPA does not regard this risk as negligible. Longstanding and carefully considered EPA policy for regulating carcinogens in drinking water is that the lifetime individual risk target is one in 10,000 ($10^{-4}$) to one in 1,000,000 ($10^{-6}$) risk. As uranium occurs in water used as a source of drinking water at levels posing risks within this target range, the Agency believes regulation is warranted. Uranium is also toxic to kidney at concentrations that may be found in drinking water, and protection against this potential hazard is also warranted. In addition, regulation of uranium in drinking water is required by the 1986 amendment to the SDWA.

(2) No-Observed-Adverse-Effect-Level

*Comments:* Two commenters cited data showing that the lowest concentration of uranium shown to cause kidney damage is 3 μg per gram of kidney with 1 μg/gram kidney being a kidney concentration well below the level causing kidney damage. The commenter stated that this concentration in water is approximately equivalent to an exposure of 1,00 pCi/l. Another commenter believed there is no reason to develop a regulatory limit for uranium of less than 5 mg/l, asserting that 5 mg/l is the accepted, nontoxic level for natural uranium from heavy metal toxicity.

*EPA Response:* The study that the first commenter is referring to (Wrenn *et al.*, 1985) goes on to derive an intake limit for uranium in drinking water based on the 1 μg per gram of kidney as a no-toxic-effects concentration level. Using a GI absorption estimate of 1.4% for humans at environmental levels of uranium intake, a safety factor of 50, and a 1.71 l/day water intake, the study recommends a 100 μg/l limit for uranium in drinking water.

Based on evidence from a number of chronic and subchronic toxicity studies with several species of animals, EPA has identified a lowest-observed-adverse-effect-level (LOAEL) of 2.8 mg uranium/kg/day based on moderately severe renal damage following 30 days of dietary administration of uranyl nitrate to rabbits (EPA, 1991e). From this LOAEL, the Agency calculated a reference dose (RfD), or daily exposure for humans likely to be without appreciable risk of adverse health effects during a lifetime. The RfD is $3 \times 10^{-3}$ mg/kg/day (EPA, EPA, 1991s).

When estimating drinking water contaminant levels for contaminants or effects associated with identified thresholds, EPA calculates a Drinking Water Equivalent Level (DWEL), a drinking-water specific lifetime exposure for the contaminant at which adverse non-carcinogenic health effects are not anticipated to occur. This DWEL for uranium was calculated to be 0.10 mg/l (or 100 μg/l) using kidney toxicity to adults as an endpoint. When setting an MCLG based on an identified threshold, the DWEL is multiplied by the relative source contribution (RSC) for water (the fraction of total exposure that derives from drinking water) to form the basis for the MCLG. EPA examines the available data on other exposure sources to identify the RSC, and uses a value of 20% as a default value if data are not available or are of poor quality; that is the case with uranium. This would give an MCLG of 20 μg/l, or approximately 30 pCi/l. This level is well below the level cited by the second commenter as an accepted, nontoxic level for natural uranium. These issues are discussed in greater detail in Sections III. and IV. below.

(3) Risk Estimates

*Comment:* One commenter stated that EPA's risk estimates for uranium are flawed because they were developed using a linear dose-response curve that overestimated risk from lifetime exposure to water supplies having up to 100 pCi/l of uranium. This commenter urged EPA to consider the BEIR IV report which contains information concerning the extrapolation of the

biological effects of all alpha emitters, including uranium.

*EPA Response:* The BEIR III report (NAS, 1980) recommends linear dose response curves for use in assessing risks from all alpha emitters, and as appropriate for uranium, since it is an alpha emitter. The BEIR IV (NAS, 1988) report makes no clear recommendation, but rather discusses the implications of making different choices among the possible alternative approaches.

(4) Economic Impact

*Comments:* Two commenters argued that the cost of treatment for uranium is too high, especially for small water systems, considering the lack of data showing that uranium is carcinogenic.

*EPA Response:* As stated above, EPA believes that there is adequate scientific evidence to show that uranium is carcinogenic to humans.

Costs for uranium removal are dependent on water system size, concentration of uranium in source water, and the type of removal treatment used. EPA has determined that proposed BATs for uranium removal are affordable by regional and large public water systems (EPA, 1991i). EPA also evaluates total, or national compliance costs as well as household costs and cost-effectiveness in assessing feasibility of treatment. EPA considers the cost of the health protection afforded by the proposed MCLs to be reasonable (EPA, 1991i). While affordability assessments are based on cost to regional and large water systems, variances and exceptions may be available for some small systems if required conditions are met (i.e., see section V.I). Variances or exemptions may not be granted if doing so would result in an unreasonable risk to health. The Agency has specified proposed BATs for variance purposes for small water systems (see section V.B) and is continuing to evaluate what costs are reasonable for public water systems.

b. *EPA's proposal to set separate MCLGs and MCLs for radium-226 and radium-228.* A total of 11 commenters submitted comments regarding the appropriateness of establishing combined or separate MCLGs and MCLs for radium-226 and radium-228.

*Comments:* Most commenters on this issue supported the establishment of separate MCLGs and MCLs for the two contaminants, citing several reasons: each appears to be different toxicologically, each has different degrees of biological effectiveness, and each has different risk levels associated with identical concentrations.

In opposition to separate MCLGs and MCLs for radium-226 and radium-228, one commenter maintained that the database for radium-228 is insufficient to warrant separate regulations for the two isotopes.

*EPA Response:* The Agency does not agree that the database for radium-228 is insufficient to warrant separate regulation. There is sufficient scientific evidence that carcinogenic risks from radium-228 are not qualitatively different from radium-226 risks (EPA, 1991b).

As discussed above, and in detail in the revised health criteria document for radium, EPA has classified radium-228 as a group A human carcinogen. Radium-228 is a beta emitter that irradiates the bone and other organs where it is deposited; EPA has classified all ionizing radiation as a group A carcinogen. Use of human epidemiology data in conjunction with the RADRISK model estimate the lifetime cancer risk from radium-228 at approximately $3\times10^{-6}$ per pCi/l. The epidemiology studies addressing radium-226 and -228 directly also indicate that two types of cancer, bone sarcomas and head carcinomas, are elevated in persons who have been exposed to ingested radium. Rowland *et al.* (1978) compared the relative effectiveness of radium-226 and radium-228 in inducing bone sarcomas and concluded that radium-228 was more effective in inducing bone sarcomas than radium-226. In addition, they demonstrated that incidence of head carcinomas were associated only with exposure to radium-226, not radium-228. This would be expected if the accumulation of radon gas in the mastoid air cells and paranasal sinuses is important in the etiology of these tumors.

EPA also included radium-228 in its NIRS survey of ground water systems nationwide (EPA, 1988b). EPA therefore has extensive data on the occurrence of radium-228 in public water supply ground water, as described in section III. below. EPA also has data supporting the analytic chemistry methods to determine compliance with the radium-228 MCL, and treatment information showing the levels to which it can be removed from drinking water, as described in section V. below.

Finally, analytical methods for radium-226 and radium-228 differ; and, analysis of NIRS co-occurrence data suggests that in coupling regulation for the two isotopes and using the interim monitoring scheme, about half of actual violations were not detected since in most cases only a gross alpha test or radium-226 test were done (the interim monitoring requirements only required radium-228 monitoring when the gross alpha measurement exceeded 5 pCi/l, 40 CFR 141.26(a)(1)(i); EPA, 1988d). The proposed revision to the monitoring requirements described in section V. below would rectify this problem.

c. *Disposal of radioactive waste generated from treatment of water for radionuclides.* A total of 15 commenters discussed the need for EPA to address technical, regulatory, and economic aspects of treatment and disposal of radioactive waste resulting from water treatment to remove radionuclides.

*Comments:* Commenters urged EPA to address the issue of disposing radium-contaminated sludge from lime softening treatment, uranium-containing spent alumina, and uranium-contaminated sludge from coagulation treatment using alum or iron salts.

Commenters pointed out that the waste streams generated by reverse osmosis and electrodialysis treatments for uranium could contain triple the uranium concentration of the raw material, and that a large problem associated with reverse osmosis treatment for uranium would be disposal of large volumes of brine generated by the process and disposal of the uranium-contaminated salts remaining after brine water evaporation.

*EPA Response:* At the present time there are no federal regulations specifically addressing the disposal of wastes generated by water treatment processes on the basis of their radionuclide content. There are regulations that apply to disposal of radioactive wastes in general, and these would apply to drinking water treatment wastes that are radioactive.

In order to guide water treatment facilities and State and local regulators toward safe waste management practices for water treatment plant wastes containing radionuclides above background levels, EPA has reviewed regulations and guidelines which address the handling and disposal of wastes containing naturally occurring radionuclides originating from industries other than water treatment.

Based on these regulations and guidelines, EPA has developed suggested guidelines for disposal options and institutional controls which would be pertinent for drinking water treatment wastes containing naturally-occurring radioactive contaminants at various ranges of concentration. These guidelines are presented in "Suggested Guidelines for the Disposal of Drinking Water Treatment Wastes Containing Naturally-Occurring Radionuclides" (EPA, 1990a).

For disposal of liquid wastes, or brines, EPA suggests discharge to surface water, discharge to sanitary

sewer, deep well injection, or evaporation or chemical precipitation followed by land disposal, as permitted by State and local regulations. For disposal of solid wastes, or sludges, EPA suggests disposal in a municipal landfill, a stabilized or institutionally controlled landfill, a hazardous waste disposal site, a permitted or licensed naturally-occurring or accelerator-produced radioactive material (NARM) facility, or a licensed low-level radioactive waste disposal facility (should the waste become low-level radioactive waste). The selection of a waste disposal option may be influenced by a variety of federal, state or local regulatory constraints and water treatment facility site specific conditions. Waste disposal is discussed in greater detail in Section V.C below.

*Comments:* Eight commenters were concerned that disposal costs for water treatment waste would significantly raise the treatment costs presented in the ANPRM.

*EPA Response:* The treatment and disposal of wastes generated by the treatment processes could increase overall treatment costs and may be beyond affordability for some small systems. However, in establishing proposed BAT, EPA identified the treatment and disposal technologies that are reasonably available for large metropolitan regional drinking water systems (systems which serve 50,000 to 75,000 persons). In this determination, EPA evaluates total, or national compliance costs as well as household costs. EPA has determined that disposal of waste from treatment for radionuclides does not significantly increase the total water treatment costs for large systems and that the proposed regulations are, overall, affordable. EPA has also included the estimated cost of waste disposal in its overall evaluation of cost of the proposed regulations (EPA, 1991i). Estimates of waste generation and cost of disposal are described in Tables 12–14, in section V.C below.

As previously mentioned, under certain conditions, variances and exceptions from any MCL requirement or NPDWR treatment technique requirement may be available for some small systems (see section V.I). Variances and exemptions may be granted by the States to systems if installed BAT does not achieve compliance, or for compelling economic reasons, as long as granting such a variance would not result in an unreasonable risk to the health of the water supply customers.

d. *EPA's proposal to set a MCLG and MCL for gross alpha radiation.* A total of 19 individuals or organizations submitted comments on EPA's proposal for regulating gross alpha particle activity.

*Comments:* A majority of the commenters responding to this issue disagreed with EPA's proposal to regulate gross alpha radiation with an MCLG and MCL; favoring the idea that gross alpha be used as a screening device only.

In support of a MCL, one commenter asserted than a total alpha activity MCL must be promulgated because Congress included "gross alpha particle activity" as one of the 83 contaminants specified for MCL development under the SDWA.

*EPA Response:* Compliance monitoring has only occasionally detected naturally-occurring radionuclides in drinking water other than radium-226, radium-228, uranium, or radon-222. Nevertheless, EPA believes that this does not preclude the possible presence of other alpha emitters, including transuranic man-made alpha emitters, and believes that a MCLG and MCL for gross alpha particle activity will provide adequate protection from alpha emitters that could potentially occur in drinking water. EPA believes an MCL for gross alpha particle activity will also provide a ceiling on the aggregate exposure and aggregate risk from all alpha emitting radionuclides. EPA is also obligated to develop an MCL for gross alpha emitters by the 1986 amendments to the SDWA, which listed gross alpha as one of the 83 contaminants to be regulated.

Gross alpha measurements will also be used as a screen for radium-226 and uranium compliance and may reduce monitoring costs.

e. *EPA's proposed amendment to the definition of gross beta and photon emitters.* Seven commenters provided comments on EPA's proposed definition of gross beta and photon emitters.

*Comments:* Three commenters stated that the definition is misleading because some naturally occurring radionuclides (e.g., potassium-40 and carbon-14) decay by beta emission.

Another commenter pointed out that some radionuclides which decay by processes other than alpha or beta decay, such as electron capture or alpha emission accompanied by photon emission, would be excluded by the proposed definition.

*EPA Response:* EPA is proposing to regulate approximately 200 beta and photon emitting radionuclides of which most, but not all are man-made. EPA considers an overall MCL for beta and photon emitters to be more appropriate than specific MCLs because of the low possibility of occurrence.

Radionuclides which decay by processes such as electron capture or alpha emission accompanied by photon emission would not be excluded from the definition.

f. *Comments on risk models used to determine estimated risk values.* A total of 14 commenters addressed the appropriateness of using an absolute risk model versus a relative risk model, and the appropriate application of risk values generated by the two models.

(1) Risk Model Selection

*Comments:* One commenter believed either a relative or absolute risk model was appropriate, but that the selection of a model should depend on the biological endpoint to be evaluated. This commenter added that the relative risk model could overestimate risk. Another commenter urged that EPA consider a quadratic dose-response risk model for radium-228 and for its risk in causing bone sarcomas. Two commenters stated that there are data to show sensitivity to radionuclide induced cancer decreases with age, and suggested that the relative risk model would be appropriate for younger age groups. One commenter stated that EPA should select the risk model with the most supporting data and address the upper range of risk estimates as generated by that model. One commenter believed that either relative or absolute risk models are acceptable because both methods yield negligible risk.

*EPA Response:* EPA recognizes that there has been no model developed to date which perfectly and consistently describes the carcinogenic risks associated with exposure to radiation and that all existing risk models can potentially over- or under-estimate actual risks. However, radiation risks are among the most studied and best understood, and there is a general consensus among the scientific community that for solid tumors other than bone, the relative risk model appears to most appropriately describe how carcinogenic risk develops over age and time. Leukemia and bone cancer appear to better fit a model in which risk peaks a few years after exposure and then decreases subsequently. This view is supported by a variety of sources (UNSCEAR, 1988), (NRPB, 1988), (RERF, 1987), (NAS, 1980, 1988). The risk models described in these sources use age- and organ-specific risk coefficients so that any age sensitivity to radiation induced cancer is incorporated in the models.

*Comment:* One commenter encouraged EPA to assume input parameters for risk assessment models

that are mean values as opposed to using conservative values.

*EPA Response:* In its risk assessments for radionuclide risks the Agency generally does use best estimates rather than conservative values.

g. *Comments on the appropriateness of setting one dose equivalent MCL standard for all radionuclides found in drinking water.*

A total of 11 commenters addressed the appropriateness of a combined MCL standard for all radionuclides found in drinking water.

*Comments:* Most commenters opposed establishing a combined MCL for alpha-emitting radionuclides for the following reasons: biological endpoints vary among isotopes, radionuclides differ with respect to occurrence and toxicology; one standard would mislead the public; and a combined standard would require an extensive effort to perform a dose assessment for each radionuclide.

One commenter noted that although it is conceptually valid to establish a combined MCL, its implementation would be more difficult due to higher analytical costs.

*EPA Response:* The Agency agrees that a combined MCL for all alpha-emitting radionuclides would not be an appropriate regulatory approach for two reasons. First, the effective dose equivalent (EDE) estimates for alpha particle emitters would be too uncertain to be the basis for risk assessment intended to support standards, because the range of alpha emissions is so short and the pharmacokinetics of alpha emitters are so complex (although the Agency believes they are reliable enough to be the basis for comparisons among the radionuclides). Second, it is known that some alpha-emitting radionuclides (i.e., uranium, radium and radon) are more widespread than others (EPA, 1985a; 1988b) and have more well-established carcinogenicity. Proposed monitoring requirements (i.e. gross-alpha screening) would serve to identify other, lesser occurring alpha-emitting radioactive contaminants in an effective and cost efficient manner.

The Agency agrees with the statement made by one commenter that implementation of a combined MCL would have higher costs due to the extent of unnecessary monitoring that might occur.

h. *Comments on regulation of man-made radionuclides as a class.* A total of 15 individuals or organizations commented on the appropriateness of establishing a MCLG and MCL as opposed to a health advisory for the entire class of man-made radionuclides.

*Comments:* A total of eight commenters felt that EPA should not establish MCLGs or MCLs for man-made radionuclides. Seven of these commenters expressed the view that EPA should not establish MCLGs or MCLs for man-made radionuclides because the presence of these contaminants in drinking water is generally the result of accidental discharges already addressed by other federal regulations. Five commenters stated their support for the establishment of non-regulatory Health Advisories for man-made radionuclides rather than MCLGs or MCLs.

In support of establishing both an MCLG and MCL for man-made radionuclides, two commenters proposed that EPA require monitoring of gross beta activity for a water system only long enough to establish that noncompliance with the MCL was unlikely. However, one of these commenters added that gross beta monitoring should be conducted if an event occurred that was expected to result in radionuclide contamination of the water supply.

Another commenter suggested that if an MCLG and an MCL are set, a cost-effective alternative to the requirements of the NIPDWR for gross beta monitoring would be to drop strontium and tritium from the required analyses, except in the case of an accident causing greater than 50 pCi/1 of gross beta emissions.

*EPA Response:* The Agency agrees that the presence of man-made radionuclide contamination in drinking water generally results from accidental discharges. EPA believes that because these contaminants are known carcinogens and one potential exposure pathway is through drinking water, setting an MCLG and MCL and requiring periodic monitoring for this class of radionuclides is appropriate, especially when a potential source of chronic contamination exists. In addition, EPA is obligated under the 1986 amendments to the SDWA to set an MCL for beta and photon emitters.

*E. Other EPA Radon and Radiation Programs*

EPA has developed the Radon Action Program, a primarily non-regulatory program, to reduce the health threat of indoor radon in air. Radon from soil gas is the principal source of radon in the air of homes, and EPA recommends that all homes be tested for radon. The relative risks of radon in air and water are discussed in more detail in section V.F. below.

EPA's Radon Action activities are conducted under the authority of the Indoor Radon Abatement Act (IRAA). They include: National and state radon surveys to measure radon levels in homes and schools; the Radon Measurement Proficiency (RMP) program, which evaluates radon testing companies; the Radon Contractor Proficiency (RCP) program, which trains and evaluates radon mitigation contractors; the establishment of four regional training centers across the country; and the development of model standards for construction of new housing to prevent elevated radon in new homes.

EPA has also prepared a variety of public information materials to educate the public about radon and to encourage people to test their homes and reduce elevated radon levels. EPA's "Citizen's Guide to Radon," (EPA, 1986f) which recommends that indoor air radon levels above 4 pCi/l in homes be mitigated, is currently being updated to incorporate the latest health risk information on radon from both soil and water, as well as mitigation technology. EPA also works with the Advertising Council on a national media campaign to motivate the public to test homes and fix elevated levels. EPA also conducts public outreach activities with the American Lung Association on a variety of outreach activities in States across the country, including media events and workshops held during Radon Action Week last October.

Public information materials on radon testing and mitigation in the home can be obtained from the national radon hotline at 1-800-SOS-RADON.

There are also regulatory programs that restrict radon and other radionuclide exposures. In November of 1989 EPA issued final regulations restricting radon emissions to the air from several categories of point sources, under section 112 of the Clean Air Act. EPA also has standards for both existing and new uranium mining and mill-tailings piles.

*F. Basics of Radiation*

The study of radiation is a specialized scientific field and much of the public water supply industry and public affected by this regulation may have only a limited understanding of it. To help provide a better understanding of radiation and these proposed regulations, appendix A presents a discussion of the fundamental concepts of radiation, its nomenclature, and its measurement.

**III. Occurrence and Exposure**

There are approximately 2,000 known radioisotopes, or radionuclides. These

isotopes emit radiation as they undergo radioactive decay (alpha particles, beta particles and gamma rays or photon radiation). They can be classified generally into two categories: natural and man-made, and are also frequently categorized by their primary mode of radioactive decay, i.e, by alpha or beta or gamma emission. Most radionuclides are mixed emitters to some degree, and each has a primary mode of disintegration with some smaller percentage of the atoms present decaying by others. The natural radionuclides are largely alpha particle emitters with some beta particle activity from the progeny. The most significant natural radionuclides (as determined by their levels of occurrence in drinking water and their potential to cause adverse health effects by this exposure route) are radon-222, radium-226, radium-228, and uranium. Some other alpha emitting radionuclides have occasionally been found in drinking water.

In setting drinking water MCLs, the agency generally sets individual contaminant standards. In this notice, EPA is proposing to set MCLs for the most prevalent radionuclide contaminants, and standards for broad categories of other much less prevalent radionuclide contaminants. Because in this notice EPA is proposing to set MCLs near the $10^{-4}$ estimated lifetime risk level for the contaminants regulated, concern about co-occurrence of these contaminants at the MCL levels arose (EPA, 1988a). Water supply systems having two or more of these contaminants at the MCLs could be placing their customers at total risk higher than EPA's target of $10^{-4}$ lifetime risk. In addition, co-occurrence of several that can be removed using the same treatment could make removals more cost-effective. Because the data examined to date are limited, EPA solicits additional data on co-occurrence to enable a more complete assessment of the potential for co-occurrence of these contaminants near the proposed MCLs.

The natural radionuclides involve three decay series which start with uranium-238, thorium-232 or uranium-235. These three series are shown in Figure 1. These are called the uranium, thorium, and actinium series, respectively. Each series decays through stages of various nuclides which emit either an alpha or beta particle as they decay and ends with a stable isotope of lead. A number of radionuclides also emit gamma rays, which accompany the alpha or beta decay. The uranium-238 series contains both radium-226 and radon-222 in the decay series and ends with the stable lead-206. The thorium-232 series contains radium-228 and ends with the stable lead-208.

BILLING CODE 6560-50-M

86

Figure 1. Uranium and thorium isotope decay series

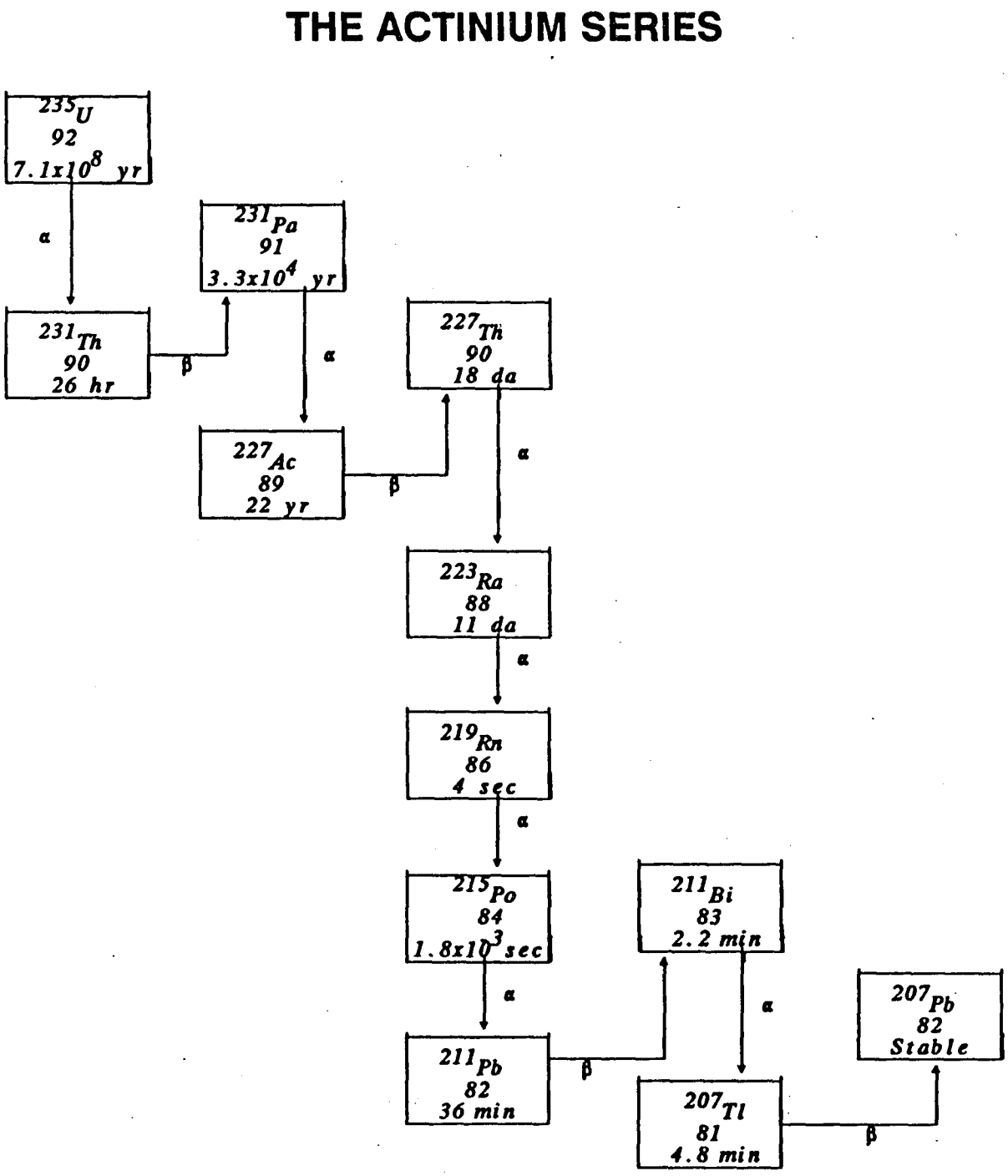

87

# THE THORIUM SERIES

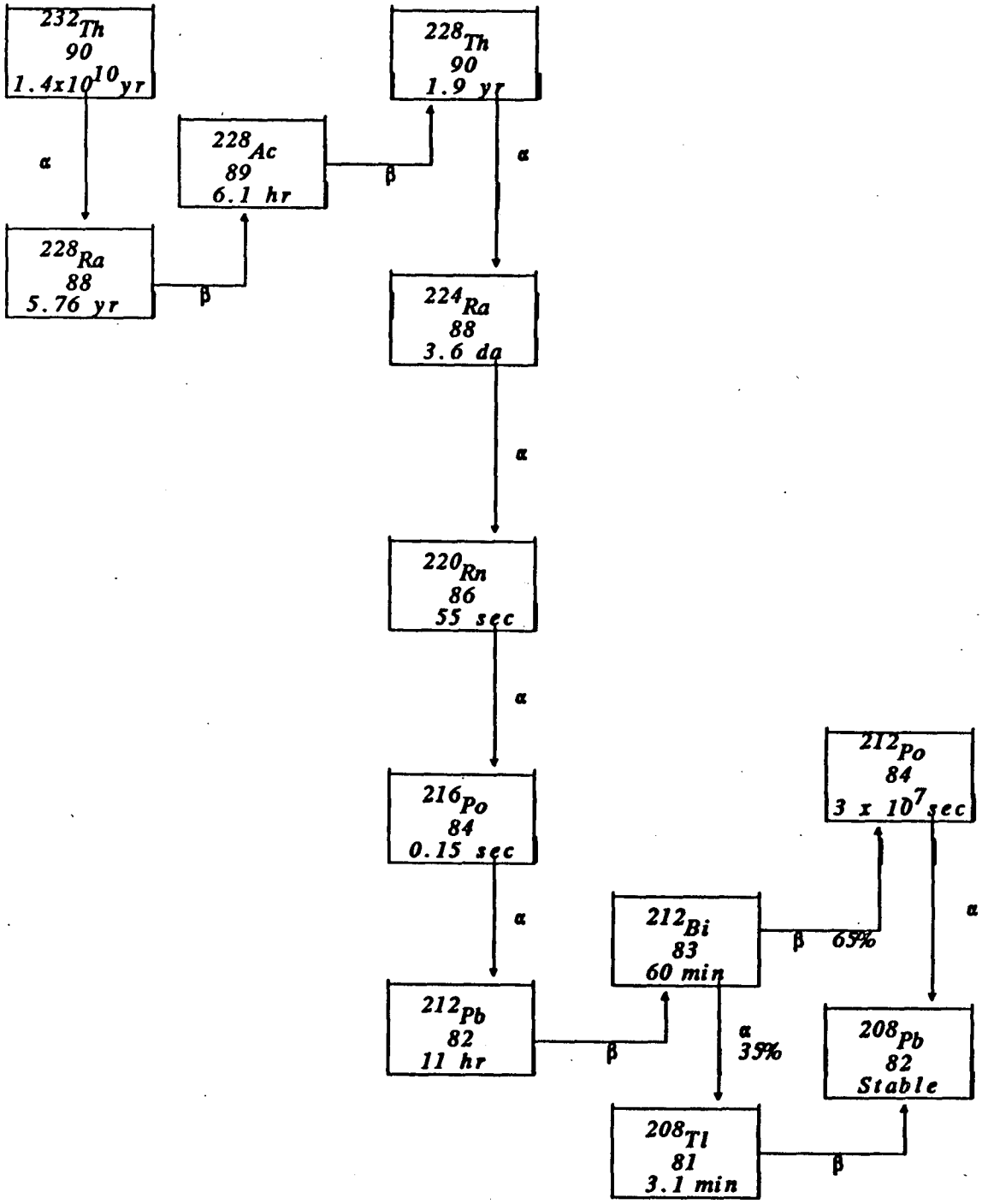

88

# THE URANIUM SERIES

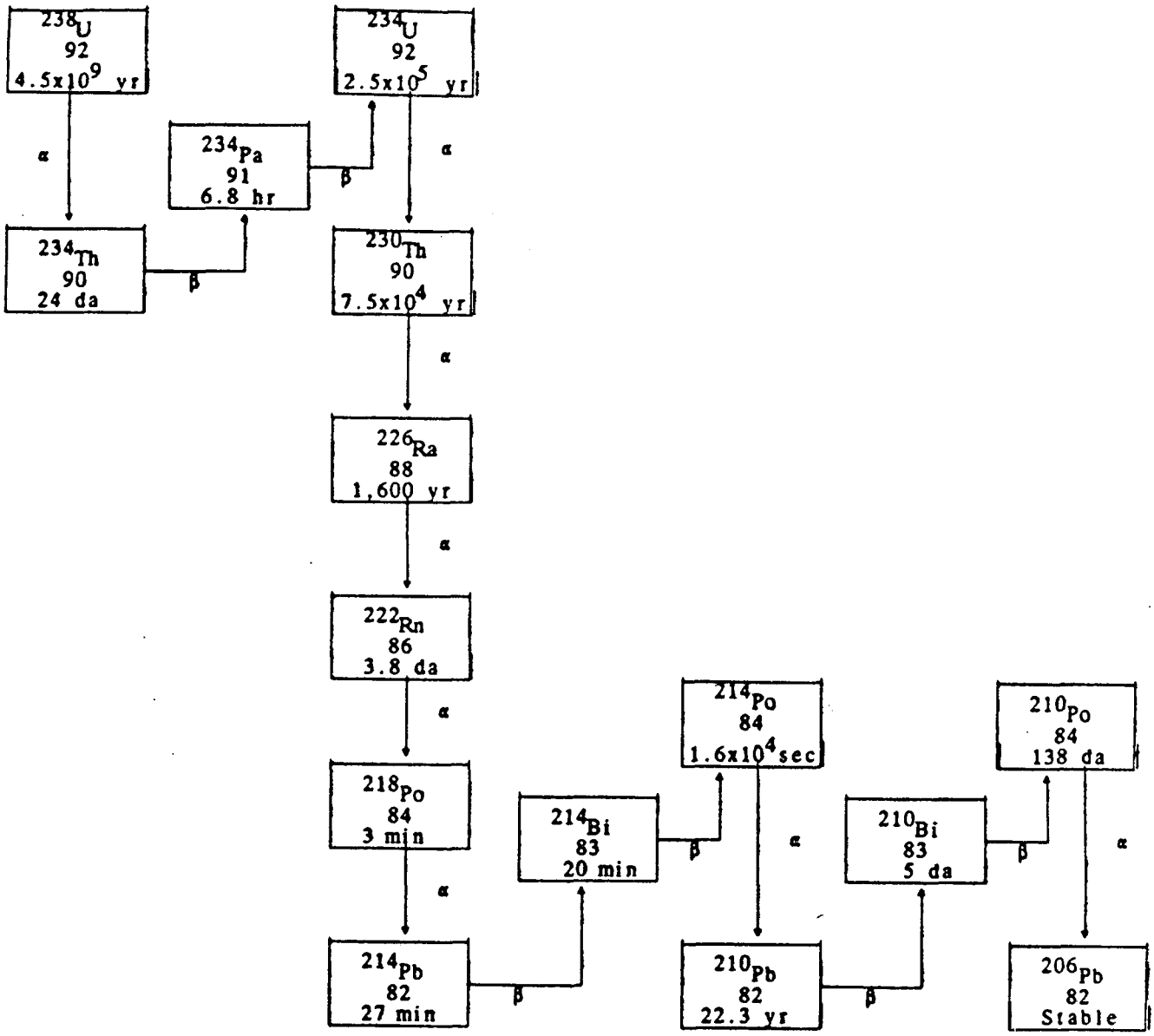


BILLING CODE 6560-50-C

The man-made radionuclides fall into two subcategories. For those radionuclides of an atomic weight higher than uranium in the Periodic Table (the transuranics), generally both alpha and beta particle decay modes occur. By contrast, almost no radionuclides below thallium (A=81) exhibit alpha particle decay properties. They undergo decay by beta and/or gamma ray emission.

Of the radionuclides that comprise the natural decay series, radium, uranium and radon are most commonly found at detectable levels in drinking water. Many of the man-made radionuclides have half-lives too short to allow them to be transported completely through a drinking water system. (The half-life of an isotope is the time required for one-half of the atoms present to decay.) However, approximately 200 man-made radionuclides do have half-lives long enough to be considered potential contaminants in drinking water, and there are a few reported cases of high levels of naturally occurring beta emitters (e.g., lead-210) in private wells. Thus, the 200 man-made and naturally-occurring radionuclides are included as a class of beta and photon emitters in this discussion.

The estimates of radon, radium, and uranium levels in drinking water of public water systems presented in this section are based on EPA's National Inorganics and Radionuclides Survey (NIRS) (EPA, 1988b). Also presented for each radionuclide is a summary of the findings of the survey on the Nationwide Occurrence of Radon and Other Natural Radioactivity in Public Water Supplies (EPA, 1985a). The title is shortened to "The Nationwide Radon Survey" in the following discussions. NIRS was initiated in the early 1980s to characterize the occurrence of a variety of substances, including the naturally occurring radionuclides covered in this proposal. Estimations of radionuclide levels derived from other available nationwide monitoring data were presented in the Advance Notice of Proposed Rulemaking (ANPRM) (51 FR 34836, Sept. 30, 1986). These have been revised based on the NIRS data, and the impacts and benefits of this proposal are estimated based on an analysis of the NIRS data.

The NIRS (EPA, 1988b) survey was designed as a stratified sample based on the population served. The universe of public groundwater supplies was stratified into four size categories (by population): very small (serving 25–500), small (serving 501–3,300), medium (serving 3,301–10,000) and large/very large (serving more than 10,000). There are approximately 60,000 community water systems nationwide. Of these, approximately 48,000 are served primarily by groundwater, 33,000 of which serve 500 or fewer people, about 10,000 serve people in communities of 500 to 3,300, 2,400 serve communities of 3,300 to 10,000, and about 1,200 serve 10,000 or more people. A total of 1,000 sites were selected randomly in proportion to the number of public groundwater supplies in each category. Approximately 2.1 percent of the drinking water supplies in each size category were selected. (Note: Sample results for the various constituents were reported for 990 of the 1,000 sites selected.)

The national occurrence estimates for radon, radium-226, radium-228 and uranium were obtained through statistical modeling of occurrence distributions derived from the results of NIRS. Lognormal distributions were computed for each radionuclide for each of the four size strata noted above. These distributions were computed using statistical techniques that allowed for the "non-detects" (referred to as censored data) to be taken into account in calculating the parameters of these distributions. The details of the methodology are provided in the occurrence documents prepared by EPA for these contaminants.

*A. Radium-226*

According to the NIRS (EPA, 1988b) data approximately 40% of the systems sampled in NIRS had radium-226 above 0.18 pCi/1, the Minimum Reporting Level (MRL). However, less than 9% of the systems exceeded 1 pCi/1 and only about 1% exceeded 5 pCi/1. The maximum level reported was 15.1 pCi/1. The mean and median of the positive values (those above the MRL) were 0.87 and 0.4 pCi/1, respectively. The overall mean value was 0.4 pCi/1, assuming a value of 0.9 pCi/1 (i.e., one-half the MRL) for those systems with results below the MRL.

NIRS also computed population-weighted averages for the states having supplies sampled in NIRS, and reported that the highest values were found in Illinois, Wisconsin, Minnesota, and Missouri, a region recognized by others (e.g., Hess et al., 1985) for having high radium-226 levels.

The national occurrence estimates derived from NIRS indicate that approximately 25,000 community and non-transient non-community ground water supplies in the U.S. have radium-226 level above 0.18 pCi/1. Approximately 600 of these supplies are expected to have radium-226 above 5 pCi/1 (half of which serve 500 or fewer people), and approximately 70 are expected to have levels exceeding 20 pCi/1 (20 of which serve 3,300 or fewer people, and 40 of which are estimated to serve 3,300 to 25,000 people) (EPA, 1991i).

Based on those occurrence estimates, it is also estimated that 3.4 million people using ground water systems are exposed to radium-226 levels exceeding 5 pCi/1, and 890,000 are exposed to levels above 20 pCi/1 (EPA, 1991i).

Quantitative estimates of radium-226 occurrence and exposure in public water supplies using surface water sources could not be generated due to the lack of comprehensive national survey data. However, based on the information discussed in Hess et al. (1985), it appears reasonable to conclude that the overwhelming majority of surface water supplies have levels between 0.1 and 0.5 pCi/1.

*B. Radium-228*

NIRS (EPA, 1988b) reported that radium-228 was found to exceed the MRL of 1 pCi/1 in approximately 12% of the systems sampled in NIRS. Less than 4% had levels above 5 pCi/1, and the maximum value reported was 12.1 pCi/1. The mean and median of the positive values were 2.0 and 1.5 pCi/1, respectively. The overall mean, using 0.5 pCi/1 for those systems below the MRL, was 0.7 pCi/1 (EPA, 1990n).

The national occurrence estimates for radium-228 indicate that approximately 500 ground water supplies have levels exceeding 5 pCi/1 (400 of which serve 3300 or fewer people), approximately 40 systems exceed 20 pCi/1 (most serving 3300 or fewer people) and 15–20 exceed 30 pCi/1. The corresponding exposure estimates are that 1.3 million people using ground water supplies receive water with radium-228 levels above 5 pCi/1, and 164,000 are exposed to water exceeding 20 pCi/1, and about 82,000 are exposed to water exceeding 30 pCi/1 (EPA, 1990n; 1991i).

Similar to radium-226, there are inadequate survey data to estimate national occurrence of radium-228 in water supplies using surface water sources. However, Hess et al. (1985) also reported that surface water levels for radium-228 are low in comparison to ground water levels.

*C. Radon*

1. Occurence

NIRS (EPA, 1988b) reported that radon was found to exceed the MRL of 100 pCi/1 in approximately 72% of the supplies sampled in NIRS. About 11% of the NIRS systems were found to have levels above 1,000 pCi/1, and 1%

reported radon levels above 10,000 pCi/1. The maximum value reported was 25,700 pCi/1. The mean and median values for the positive sites were 881 and 289 pCi/1, respectively. The overall mean, using a value of 50 pCi/1 for those sites below the MRL, was reported to be 648 pCi/1.

Based on the NIRS data, it is estimated that approximately 45,000 community and non-transient noncommunity ground water supplies in the U.S. have radon levels above 100 pCi/1. About 25,900 are estimated to have levels exceeding 300 pCi/1, with 9,400 exceeding 1,000 pCi/1. Approximately 80–85% of all systems exceeding any of these values serve 500 or fewer people. It is also estimated that 47 million people are served by those systems having radon levels above 100 pCi/1, 17 million by those having radon levels above 300 pCi/1, and 2.7 million by those with levels above 1,000 pCi/1 (EPA, 1991i).

Quantitative estimates of the occurrence of radon in public water supplies using surface water sources could not be developed due to the lack of data. However, based on the limited information provided in the Nationwide Radon Survey it appears that levels in such supplies are very low compared to levels observed in ground water supplies. Of 25 surface water systems in the Nationwide Radon Survey for which data were available, 23 (92%) had levels below 100 pCi/1. The mean level was 34 pCi/1, with a maximum level reported at 240 pCi/1. The Agency requests that data on radon levels in water supplies using surface water sources in this notice be submitted, if such data are available.

Radon levels in ground water can also vary on a diurnal or longer term basis. Data on radon variability were developed by Kinner et. al (Kinner, 1990) during their study of radon treatments. A review of the monitoring data taken from several of the wells used in the treatment studies showed up to 2 fold variations in radon levels at various wells over periods of one year or less. Variability over the course of a single day was generally less than over the longer periods. EPA has also funded an ongoing study by the State of Connecticut to investigate the variability in radon levels in water. EPA will incorporate these results when they are available.

Because of this variability in radon levels in water, EPA is proposing more frequent monitoring for radon than the other contaminants proposed for regulation here, but will also allow averaging of results for determining compliance, as described in section V.G below. EPA solicits additional data on the variability of radon levels in water, and on use of these data in establishing compliance monitoring requirements.

2. Assessing individual radon exposure from inhalation and ingestion

Because it is a volatile contaminant, radon poses exposure issues not encountered in estimating exposures (and risks) for other drinking water contaminants. In assessing exposure and risk from radon, EPA has generated two separate exposure (EPA, 1991h) and risk assessments (EPA, 1991c), by the inhalation and ingestion exposure routes.

For other volatile contaminants regulated under the SDWA, EPA has continued to use its estimate of 2 liters of daily water consumption to assess overall exposure and risk. EPA estimated that while a volatile compound may be lost from water used for cooking or to make tea or coffee (and therefore the ingestion exposure would be lost), there would be an inhalation exposure to the contaminant approximately equivalent to the amount lost in cooking, etc., via contaminant release to the air (from all water uses in the house). Because adverse health effects for the VOCs were systemic rather than route specific, exposure route was not critical if overall exposure was adequately estimated. In addition, there were few data on inhalation exposures to volatile drinking water contaminants. Therefore, continued use of the 2 liters daily water consumption served as an adequate surrogate for total exposure by both routes.

In considering exposure and risk estimation for radon there were two critical differences that led EPA to its present approach of generating two route specific exposure and risk assessments. First, it was possible to generate a reliable average estimate of inhalation exposure, although there can be substantial individual variability. Empirical studies have been conducted on the transfer of radon from water to the air of a house (Hess et. al., 1991), and several published modeling approaches to assessing exposure are available. EPA's assessment of these is described in detail in the background document "Radon in Drinking Water: Assessment of Exposure Pathways" (EPA 1991h). Second, there are important route-specific considerations in assessing radon risks. While radon is considered a known human carcinogen by both ingestion and inhalation, the type and quality of information on which to base a risk assessment is different for the two routes. Risk of lung cancer by inhalation from radon and its progeny is based on a series of human epidemiology studies, as described below, and has many elements specific to radon with its progeny in the air. The target organ for these studies was the lung only. Risk by ingestion is based on modeled estimates of radiation dose and risk to all body organs as a result of consuming water containing radon.

In assessing indoor air exposure to radon resulting from its presence in drinking water, EPA has used an overall average estimated factor for transfer of radon from water to air of 10,000 to 1 (i.e., 10,000 pCi/l radon in water contributes 1 pCi/l to air). EPA extensively reviewed both the empirical data and the various modelling approaches that are available, including exposure to radon during showering. EPA's review is presented in "Radon in Drinking Water: Assessment of Exposure Pathways" (EPA 1991h). As described above in EPA's reply to comments from the SAB/RAC, EPA concluded that although mass balance modeling can be performed for radon from showering and other water use, assessing risk based on this information is difficult. Human activity patterns are highly variable with regard to factors that have a large influence on exposure, such as type and length of shower, flow rate, timing of multiple showers within a household, and location and use of clothes washing machines. Also, significant unanswered questions remain about the equilibrium of radon with its progeny in the shower and bathroom, the unattached fraction, and aerosol particle size in a shower and behavior of water aerosols in the respiratory tract. Modeling does allow for risks from showers to be broadly bounded, and EPA has done so in its review. EPA concluded that exposure and risk estimates developed from modeled water use throughout the house (including showering) differ only slightly from the results obtained from use of an average water to air transfer factor such as 10,000:1, based on the empirical data. EPA is therefore using the 10,000:1 transfer factor as an average for purposes of assessing national risks to radon in drinking water.

In assessing exposure and risk due to ingestion of radon in water EPA used a value less than its standard assumption of 2 liters daily water consumption. Because radon is a volatile gas, only water freshly drawn from the tap and directly consumed will have appreciable amounts of radon. Even water directly consumed after being drawn will have less radon than would be measured by carefully drawing a sample from the tap for monitoring purposes, because of

aeration and agitation of the water in the process of drawing the water and consuming it. EPA therefore applied a correction factor of 0.20 (i.e., reduced by 20%) to fresh, directly consumed tap water to account for radon loss resulting from the act of drawing and drinking the water (EPA, 1991h). EPA also reviewed the available data on water ingestion rates, and presents its analysis in the background document (EPA, 1991h). This analysis separately estimates fresh tap water intake, total tap water intake, and total fluid intake. Because only freshly drawn and directly consumed tapwater is expected to contain radon, the direct tap water intake values were considered for assessing exposure to radon via ingestion. Based on this analysis, EPA estimated an average direct tapwater intake of 0.65 liters daily, rounded to 0.7 liters. However, EPA has considered its 2 liter daily intake to be a "reasonable maximum" estimate, and believes water intake for assessing radon exposure via ingestion should be consistent with this. As noted in the analysis, Ershow and Cantor (1989) found that fresh tapwater intake was 55% of total tapwater. Using this percentage with the 2 liter assumption results in a reasonable maximum fresh tap water exposure of 1.1 liters daily. EPA has rounded this value to 1 liter of daily directly consumed tap water for assessing radon exposure via ingestion of drinking water (in addition to airborne exposures).

EPA solicits public comment on the radon exposure issues discussed here. Specifically, EPA solicits public comment on use of an average water to air transfer factor of 10,000 to 1 for inhalation exposure to radon and its progeny, and on possible alternative use of models to assess exposures, especially during possible high exposure activities such as showering, and especially focusing on dosimetry issues in this exposure scenario. EPA also specifically solicits comment on its use of 1 liter daily consumption of freshly drawn, directly consumed tap water as a reasonable maximum estimate for assessing exposure to radon via ingestion, and possible alternative use of the average value of 0.7 liters daily water intake. Finally, EPA solicits comment on the estimated 20% loss of radon from water before consumption.

*D. Uranium*

Natural uranium contains three isotopes: uranium-234, uranium-235 and uranium-238. The corresponding percentages of occurrence in rock for these isotopes are 0.006, 0.72 and 99.27 percent by weight, respectively. However, the percent occurrence of these isotopes relative to each other is not constant in drinking water. Uranium-238 and uranium-234 are responsible for most of the uranium radioactivity in natural waters. The overall activity-to-mass of uranium ratio for the three natural isotopes of uranium in rock is approximately 0.68 pCi/μg and is frequently used to estimate the activity of total uranium measured as mass (EPA, 1988b; EPA/ORNL, 1981). The 0.68 pCi/μg value is based on the natural crustal abundance of isotopes. The uranium-234/uranium-238 activities ratio of one, that is inherent in this assumption, may not be appropriate for samples taken from water. The Nationwide Radon Survey (EPA, 1985a), which measured uranium as well as radon, reported a range of uranium-234 to uranium-238 activity ratios in water of 0.7 to 32 with an arithmetic mean of 4.4 and a geometric mean of 2.7. Using the uranium-234 to uranium-238 activity ratio of 2.7, an overall activity to mass ratio of 1.3 pCi/μg was calculated for uranium as it occurs in drinking water (EPA, 1990h; 1991o). The 1.3 factor was applied to the NIRS results to convert those data from mass (μg/l) to activity (pCi/l) for total uranium.

Approximately 72% of the sites in NIRS had uranium levels above 0.1 pCi/l (0.08 μg/l). Most of these (70%) had levels between 0.1 and 20 pCi/l (approximately 0.08 and 15 μg/l). Uranium was found to exceed 30 pCi/l (20 μg/l) in only about 1% of the systems in NIRS. The maximum value found was 115 pCi/l (88.2 μg/l) (EPA, 1991o).

Based on an analysis of the NIRS data, national occurrence estimates for community and non-transient non-community water supplies (both ground and surface water) indicate that approximately 1500 will have levels exceeding 20 μg/l, serving approximately 875,000 people (EPA, 1991i). Of the 1500 systems exceeding 20 μg/l, 1460 are estimated to serve 3300 or fewer people. The available data on uranium in surface water supplies was limited. Although levels are expected to be lower than for ground water systems, unlike radium and radon they may not be insignificant. As a conservative estimate of occurrence, the ground water occurrence distributions were applied to surface water systems to derive the above estimate (EPA, 1991i; 1991o).

Uranium is a kidney toxin (as well as a carcinogen) and EPA is proposing to base the MCL on kidney toxicity, as discussed in sections IV.C.3 and V.F below, because kidney toxicity may occur at levels below the $10^{-4}$ cancer risk level. The MCLG is being proposed as zero, and the relative contribution of exposure from other sources is not usually considered. However, because kidney toxicity is the limiting toxic endpoint of concern for regulation, uranium exposure from sources other than drinking water was reviewed, to derive a relative source contribution (RSC) factor, to ensure that the MCL is set at a safe level.

In determining how to consider exposures by routes other than drinking water in establishing standards, EPA first reviews all relevant exposure data on the contaminant. This typically involves reviewing dietary intake data, and assessing the relative contributions of diet and drinking water to total intake. The fraction of total intake accounted for by drinking water as a source is the relative source contribution factor for drinking water. When data are inadequate to confidently estimate this value, a default value of 20% is used. A ceiling of 80% for the relative source contribution is also used. EPA's approach to determining relative source contributions is decribed in more detail in the **Federal Register** published May 22, 1989, on pages 22069–20070.

The data available on uranium intake from various food sources are described in the occurrence document for uranium (EPA 1990h; 1991o). Those data indicate that median dietary uranium intake from food is generally low, approximately 1.3 pCi/day as an average, with a 90th percentile of approximately 5 pCi/day. However, these data represent residents of only three cities, on the east coast and west coast, with no assessment of dietary intake for residents of the midwest or west, where uranium in soil and water may be higher.

EPA is proposing to use the 20% default value as the RSC for use in calculating a uranium MCL because of the poor data base for estimating dietary exposures. EPA recognizes this may be a conservative assessment, but believes it is warranted because the available data on uranium intake via food do not include areas of the country expected to have uranium in the soil and water. Those areas may need lower water contributions to total uranium intake in order to maintain total uranium intakes low enough to ensure safety from kidney toxicity. EPA solicits public comment on use of the default value of 20% RSC for uranium. EPA is especially interested in additional data on uranium intake from food to better estimate an alternative RSC value between 20% and 80%. EPA also solicits public comment on its general approach to determining the relative source contribution factor,

including its method of calculation and 20% and 80% boundaries.

*E. Beta and Photon-Emitting Radionuclides*

The availability of data on the occurrence of man-made radionuclides in public water supplies is very limited. The major source of relevant information is the ERAMS (Environmental Radiation Ambient Monitoring System), the data for which are published in the quarterly ERD (Environmental Radiation Data; as reported in EPA, 1989c) reports. The ERD reports provide data on gross beta, tritium, strontium-90, and iodine-131 for 78 sites (all surface water sources) that are either major population centers or selected nuclear facility environs.

The data presented in the ERD reports for 1985 through 1987 indicate that gross beta levels ranged from 0.3 to 17.8 pCi/l, with an average across all three years of less than 3 pCi/l (EPA, 1989c). There were no instances where gross beta exceeded 50 pCi/l. Tritium levels in this period were reported to range between 0 and 2,500 pCi/l, with average values across all three years generally falling between 100 and 300 pCi/l. Strontium-90 values did not exceed 0.9 pCi/l, with typical values falling below 0.2 pCi/l. Iodine-131 levels were all below 0.4 pCi/l, with average values below 0.1 pCi/l EPA, 1989c).

As is apparent from these data, nuclear facilities routinely release very small amounts of these materials to the environment during their normal operations. These releases are of concern only to a few drinking water supplies, i.e., those supplies downstream from nuclear facilities or using a water source that may be affected by nuclear facility releases. While normal releases pose very low risks, accidental or unscheduled releases could be of concern.

One naturally occurring beta and photon emitter potentially of concern is lead-210, the first long-lived progeny of radon-222. Lead-210 was not monitored in the NIRS survey, and data on its occurrence in drinking water supplies are limited (EPA, 1991g). However, the drinking water concentration estimated to correspond to 4 mrem ede/yr (assuming 2 liters daily intake) is 1 pCi/l, a level low enough to potentially warrant health concern, and below the PQL for the gross beta screen. As discussed in section V.G below, EPA is proposing unregulated contaminant monitoring of lead-210 in public water supplies, to better assess any risk posed and to evaluate the possible need to develop an MCL for lead 210.

*F. Alpha-Emitting Radionuclides*

Gross alpha is a measure of the alpha particle emissions from total non-volatile alpha emitting radionuclides. Since radium 226 and uranium are alpha emitters that are proposed to be regulated separately, the gross alpha occurrence assessment is adjusted to eliminate these radionuclides. The term "adjusted gross alpha" represents total gross alpha measurements less radium 226 and uranium contributions. EPA is proposing an "adjusted gross alpha" MCL as a means of limiting exposures to a number of other radionuclides that do not occur frequently enough to warrant a national regulation but may be present in some water supplies. These include several of the progeny of the radionuclides for which contaminant-specific standards are being proposed today. The adjusted gross alpha MCL is distinguished from the gross alpha laboratory measurement to avoid confusion.

The evaluation of the NIRS (EPA, 1988b) database for adjusted gross alpha entails the manipulation of three sets of data (i.e., gross alpha, radium 226, and uranium). Each data set has its own detection limit and inherent uncertainty, and the analysis of all three data sets together to estimate occurrence increases the overall uncertainty of the results. To create the most meaningful data set of adjusted gross alpha, the NIRS data were evaluated in terms of a reasonable worst case approximation, which represents the highest reasonable estimate of gross alpha concentrations (EPA, 1991f). An attempt to estimate the lower bound was unproductive, because when lower bound assumptions were made in evaluating the three data sets together, there were too few positive data points to model national occurrence.

Due to the lack of national data, quantitative estimates of the occurrence of adjusted gross alpha in surface water supplies could not be generated independently. As a conservative estimate, the ground water occurrence distributions were applied to surface water systems (EPA, 1991f).

Based on the upper bound approximation, 17% of the systems sampled in NIRS reported adjusted gross alpha above 2.6 pCi/l, the minimum reporting level for gross alpha. The maximum level was 94 pCi/l. The overall mean and median levels were 2.7 and 1.8 pCi/l, respectively. Fewer than 7% reported levels above 5 pCi/l, 3% reported levels above 10 pCi/l, 2% reported levels over 15 pCi/l and only 1% had levels over 20 pCi/l (EPA, 1991f).

National occurrence estimates based on the upper bound approximation for adjusted gross alpha indicate about 1200 water supplies (serving 5 million people) exceeding 5 pCi/l, 300 systems (serving 1.8 million people) exceeding 10 pCi/l, 130 systems (serving 900,000 people) exceeding 15 pCi/l and 65 systems (serving 500,000 people) exceeded 20 pCi/l (EPA, 1991f, EPA, 1991i). Approximately 90% of the systems affected at any of these levels serve 3300 or fewer persons.

EPA notes however, that this analysis has a high degree of uncertainty, due to the simultaneous assessment of the three data bases together. Also, analytic problems with the gross alpha measurements in the NIRS survey preclude a more refined analysis. EPA considers the uncertainty in this estimate to be large, and that it likely over predicts occurrence.

EPA also conducted a search of the published literature to identify reports of alpha emitting radionuclides in water (EPA, 1991f). While these data are not nationally representative, and not all were measurements made in potable water, they do provide some indication of the alpha emitters that may be found in public water supplies in some instances. The most frequently occurring alpha emitter was polonium 210, which was identified in ground water at levels up to 2500 pCi/l in one sample in Florida, and at 3100 pCi/l in one sample in a uranium rich area of New Mexico. Most measurements were below these levels, in the 1 to 10 pCi/l range. Various radioisotopes of thorium were also found in ground water, although most were at or below 1 pCi/l. The same uranium rich area of New Mexico showed some higher thorium measurements. Finally, various plutonium isotopes were found in surface waters around the country, mostly at levels below 0.01 pCi/l. These levels are most likely present as nuclear fallout from above-ground nuclear explosions.

Another source of relevant information is the ERAMS (Environmental Radiation Ambient Monitoring System), the data for which are published in the quarterly ERD (Environmental Radiation Data; as reported in EPA, 1991f) reports. The ERD reports provide data on a number of beta emitters as well as plutonium-238, -239 and -240 for 78 sites (all surface water sources) that are either major population centers or selected nuclear facility environs. Average plutonium levels were generally below 0.01 pCi/l, although values as high as 0.8 pCi/l

were reported for plutonium-238 at two sites.

## IV. Proposed MCLGs for Radionuclides

### A. Setting MCLGs

MCLGs are set at concentration levels at which no known or anticipated adverse health effects would occur, allowing for an adequate margin of safety. Establishment of a specific MCLG depends on the evidence of carcinogenicity from drinking water exposure or the Agency's reference dose (RfD), which is calculated for each specific contaminant.

Establishing the MCLG for a chemical is generally accomplished in one of three ways depending upon its categorization (Table 1). The starting point in EPA's analysis is the Agency's cancer classification (i.e., A, B, C, D, or E). Each chemical is analyzed for evidence of carcinogenicity via ingestion. In most cases, the Agency places Group A, B1, and B2 contaminants into Category I, Group C into Category II, and Group D and E into Category III. However, where there is additional information on cancer risks from drinking water ingestion (taking into consideration weight of evidence, pharmacokinetics and exposure) additional scrutiny is conducted which may result in placing the contaminant into a different category. Asbestos and cadmium are examples where the categorization was adjusted based on the evidence of carcinogenicity via ingestion.

EPA's policy is to set MCLGs for Category I chemicals at zero. The MCLG for Category II contaminants is generally based on the RfD/DWEL (drinking water equivalent level, as described below) with an added margin of safety to account for cancer effects or is based on a cancer risk range of $10^{-5}$ to $10^{-6}$ when non-cancer data are inadequate for deriving an RfD. Category III contaminants are based on the RfD/DWEL approach.

TABLE 1.—EPA'S THREE-CATEGORY APPROACH FOR ESTABLISHING MCLGS

| Category | Evidence of carcinogenicity via ingestion | MCLG setting approach |
|---|---|---|
| I | Strong evidence considering weight of evidence, pharmacokinetics, and exposure. | Zero. |

TABLE 1.—EPA'S THREE-CATEGORY APPROACH FOR ESTABLISHING MCLGS—Continued

| Category | Evidence of carcinogenicity via ingestion | MCLG setting approach |
|---|---|---|
| II | Limited evidence considering weight of evidence, pharmacokinetics, and exposure. | RfD approach with added safety margin or $10^{-5}$ to $10^{-6}$ cancer risk range. |
| III | Inadequate or no animal evidence. | RfD approach. |

The MCLG for Category I contaminants is set at zero because it is assumed, in the absence of other data, that there is no known threshold. Category I contaminants are those contaminants which EPA has determined that there is strong evidence of carcinogenicity from drinking water ingestion. If there is no additional information to consider on potential cancer risks from drinking water ingestion, chemicals classified as group A (based on sufficient human epidemiological evidence) or B carcinogens are placed in Category I.

Category II contaminants include those contaminants for which EPA has determined there is limited evidence of carcinogenicity via drinking water ingestion considering weight of evidence, pharmacokinetics, and exposure. If there is no additional information to consider on potential cancer risks from drinking water ingestion, chemicals classified by the Agency as Group C carcinogens are placed in Category II. For Category II contaminants two approaches are generally used to set the MCLGs—either (1) setting the goal based upon non-carcinogenic endpoints (the RfD) then applying an additional uncertainty (safety) factor of up to 10 or (2) setting the goal based upon a nominal lifetime cancer risk calculation in the range of $10^{-5}$ to $10^{-6}$ using a conservative calculation model. The first approach is generally used; however, the second is used when valid non-carcinogenicity data are not available and adequate experimental data are available to quantify the cancer risk. EPA is currently evaluating its approach to establishing MCLGs for Category II contaminants.

Category III contaminants include those contaminants for which there is inadequate evidence of carcinogenicity via ingestion. If there is no additional information to consider, contaminants classified as Group D or E carcinogens are placed in Category III. For these contaminants, the MCLG is established using the RfD approach.

The cancer classification for a specific chemical and the reference dose are adopted by two different Agency groups. Decisions on cancer classifications are made by the Cancer Risk Assessment Verification Endeavor (CRAVE) group, which is composed of representatives of various EPA program offices. Decisions on EPA reference doses (using non-cancer endpoints only) are made through the Agency Reference Dose work group, also composed of representatives of various EPA program offices. Decisions by CRAVE and the RfD groups represent risk assessment decisions for the Agency and are used by the respective regulatory programs as guidance for regulatory (risk management) decisions. Decisions of these two groups are published in the Agency's Integrated Risk Information System (IRIS). This system can be accessed by the public by contacting Mike McLaughlin of DIALCOM, Inc. at 202-488-0550.

The RfD is an estimate, with an uncertainty spanning perhaps an order of magnitude, of a daily exposure to the human population (including sensitive subgroups) that is likely to be without an appreciable risk of deleterious health effects during a lifetime. The RfD is derived from a no- or lowest-observed-adverse-effect level (called a NOAEL or LOAEL, respectively) that has been identified from a subchronic or chronic scientific study of humans or animals. The NOAEL or LOAEL is then divided by the uncertainty factor to derive the RfD.

The use of an uncertainty factor is important in the derivation of the RfD. EPA has established certain guidelines (shown below) to determine which uncertainty factor should be used:

10—NOAEL in humans. Accounts for intra-species variability.

100—LOAEL in humans or NOAEL from animal study.

1,000—Human data not available. Extrapolation from animal studies of less than chronic exposure or from a LOAEL in animals.

1–10—Additional safety factor based on scientific judgement.

In general, an uncertainty factor is calculated to consider intra- and interspecies variations, limited or incomplete data, use of subchronic studies, significance of the adverse effect, and the pharmacokinetic factors

From the RfD, a drinking water equivalent level (DWEL) is calculated by multiplying the RfD by an assumed adult body weight (generally 70 kg) and then dividing by an average daily water

consumption of 2 L per day. The DWEL assumes the total daily exposure to a substance is from drinking water exposure. The MCLG is determined by multiplying the DWEL by the percentage of the total daily exposure contributed by drinking water, called the relative source contribution. Generally, EPA assumes that the relative source contribution from drinking water is 20 percent of the total exposure, unless other exposure data for the chemical are available. The calculation below expresses the derivation of the MCLG:

$$\text{RfD} = \frac{\text{NOAEL or LOAEL}}{\text{uncertainty factor}}$$

$$= \text{mg/kg/body weight/day} \quad (1)$$

$$\text{DWEL} = \frac{\text{RfD} \times \text{body weight}}{\text{daily water consumption in L/day}}$$

$$= \text{mg/L} \quad (2)$$

$$\text{MCLG} = \text{DWEL} \times \text{drinking water contribution} \quad (3)$$

For chemicals suspected as carcinogens, the assessment for non-threshold toxicants consists of the weight of evidence of carcinogenicity in humans, using bioassays in animals and human epidemiological studies as well as information that provides indirect evidence (i.e., mutagenicity and other short-term test results). The objectives of the assessment are (1) to determine the level or strength of evidence that the substance is a human or animal carcinogen and (2) to provide an upper bound estimate of the possible risk of human exposure to the substance in drinking water. A summary of EPA's carcinogen classification scheme (51 FR 33992, September 24, 1986) is:

*Group A*—Human Carcinogen based on sufficient evidence from epidemiological studies.

*Group B1*—Probable human carcinogen based on at least limited evidence of carcinogenicity to humans.

*Group B2*—Probable human carcinogen based on sufficient evidence in animals and inadequate or no data in humans.

*Group C*—Possible human carcinogen based on limited evidence of carcinogenicity in animals in the absence of human data.

*Group D*—Not classifiable based on lack of data or inadequate evidence of carcinogenicity from animal data.

*Group E*—No evidence of carcinogenicity for humans (no evidence for carcinogenicity in at least two adequate animal tests in different species or in both epidemiological and animal studies).

*B. Estimating Health Risks of Radionuclides*

During the years since the publication of the National Interim Primary Drinking Water Regulations (41 FR 28404, July 9, 1976), which established MCLs for radium, gross alpha, and gross beta, a great deal of additional data and better understanding of the risks posed to human health by the radionuclides discussed in this notice have been obtained. Many of these new data are presented and discussed in the ANPRM (51 FR 34836, Sept. 30, 1986) and the health criteria documents supporting this proposal.

Several different approaches have been used in assessing the risks posed by exposure to radionuclides. These fall into two broad categories: Risk assessment based directly on the results of individual scientific studies of specific compounds (either human epidemiology studies or experimental studies on animals) for developing a risk assessment for that radionuclide, or risk assessment based on dosimetric models which integrate the results of a large number of studies on a variety of radioactive compounds and radiation exposure situations into an overall model which is then used to estimate risks for many different radionuclides. Studies used to create such models include both human epidemiology studies and animal studies, and include the results of research on subjects such as the metabolic fate of different radioisotopes, risks posed by different kinds of radiation, effects of dose rate, sensitivity of internal organs to radiation, identification of sensitive sub-populations, and other relevant subjects. The Criteria Documents developed in support of this proposed regulation present both studies which could individually be used as the basis for estimating risks, and also dosimetric models (EPA, 1991a; 1991b; 1991c; 1991d; 1991e). As described below, and in the Criteria Documents, EPA has generally used the dosimetric model approach to estimating risks to the radionuclides (except for radon lung cancer risk), and has used specific studies to make several adjustments to the modeled estimates.

There are several examples of using individual scientific studies of specific radionuclides as the basis for risk estimation for those radionuclides. These include the radium watch dial painters studies of Rowland et al. (1978) and the risk assessment developed by Mays et. al. (1985), and studies of radon exposure to uranium mine workers. They also include a series of studies of patients injected with Thorotrast, a thorium-based contrasting agent used in medical radiology, which were reviewed by the BEIR IV committee (NAS, 1988). Another approach is combined analysis of several studies or cohorts of miners exposed to radon gas, as was done by the BEIR IV committee in assessing radon lung cancer risks (NAS, 1988).

In addition, there are several community ecologic studies of exposures to radionuclides in drinking water supplies and the disease rates in these communities. However, these studies do not show consistent increases in specific tumor types across studies of the same radionuclide as do the watch dial painter studies and the underground miner studies of radon. There is considerable difficulty in controlling for confounding factors in such studies and they generally do not have the specificity or statistical power to serve as the basis for a quantitative estimation of cancer risk, although some of them do give indications of possible effects and may point to future research needs. Therefore, although reviewed in the criteria documents, these are not used to estimate risks for radionuclides in drinking water.

Because all radiation has identical health effects, dosimetric models which integrate a large body of information on radiation in general as well as individual radionuclides can apply to a large number of radionuclides. This is an advantage because information on one radionuclide can be extrapolated to estimate risks from other radionuclides for which there may be fewer data. Models can also be used to estimate radiation dose, and risk, to tissues that are at lower risk and therefore not identified as target organs in epidemiology studies. Several such models have been developed. The International Council for Radiation Protection (ICRP) is one group that has developed and made several revisions to a model for predicting and controlling

radiation doses to workers exposed to radionuclides and to provide for worker safety. EPA uses a dosimetric model that is very similar to the ICRP model in a computer program called "RADRISK" which uses the ICRP type models to estimate risk to the general population due to environmental exposures. EPA views use of dosimetric models as a means of integrating all information on the risks posed by radionuclides into a more complete evaluation of the risks, and tries to appropriately use all information in establishing the model parameters.

*C. Adverse Health Effects of the Radionuclides*

The radionuclides for which NPDWRs are proposed in today's Notice are all classified in Group A, known human carcinogens. For radium and radon this classification is based on direct human epidemiological evidence. In the case of uranium, the classification is based on the knowledge that uranium is deposited in the body, delivering calculable doses of ionizing radiation to the tissues. This is also true of beta, gamma, and photon emitters. Despite differences in radiation type, energy or half-life, the health effects of radiation are identical.

TABLE 2.—CLASSIFICATION OF THE CARCINOGENICITY OF RADIONUCLIDES

| Isotope | Cancer group | Summary of basis |
|---|---|---|
| Rn-222 | A | Lung cancer caused by inhalation of radon and its short-lived, radioactive decay products. Increased lung cancer mortality in numerous epidemiological studies of underground miners exposed to elevated levels of Rn-222 and its radioactive decay products. Animal studies show similar results (NAS, 1988; UNSCEAR, 1988; EPA, 1991b; 1991c). |
| Ra-226 | A | Bone sarcomas and head carcinomas in workers occupationally exposed to radium-containing paints via ingestion. Supporting human data from studies of increased cancer incidence in patients treated with Ra-224 via injection and supporting animal evidence from studies of mice injected with Ra-226 and beagle dogs injected with Ra-226 and 228 (NAS, 1988; UNSCEAR, 1988; EPA, 1991b; 1991c). |
| Ra-228 | A | Same as Ra-226 except head carcinomas are not believed to be associated with ingestion of Ra-228 (NAS, 1988; UNSCEAR, 1988; EPA, 1991b; 1991c). |
| Uranium | A | Emission of ionizing radiation (alpha, beta and/or gamma radiation) by U and its decay products. Although there is little direct evidence of U carcinogenicity, U is found in soft tissues and concentrates in kidney and bone. These body burdens deposit calculable amounts of ionizing radiations in tissue. These tissues are expected to respond as they would to any other ionizing radiation and be at increased risk from cancer. These conclusions are supported by the results of animal studies (Hodge, 1973; Maynard et al., 1953; NAS, 1988; EPA, 1991e). |
| Beta/gamma. | A | Extensive human epidemiological data in a number of irradiated populations show increasing risks of various types of cancers with increasing doses of ionizing radiation; most notably, the Japanese atomic bomb survivors. Also supported by animal study results (NAS, 1988). |

1. Radium-226 and Radium-228

The Agency has placed radium-226 in Group A based upon clear evidence of carcinogenicity to humans and animals (EPA, 1991b; 1991p). Most information on human health effects of radium comes from epidemiologic studies of two groups: (1) Radium-dial painters in the early part of this century who ingested a considerable amount of radium paint (containing various proportions of radium-226 and radium-228) by sharpening the point of the paint brush with the lips and (2) patients in Europe injected with a short-lived isotope of radium, radium-224, for treatment of spinal arthritis and tuberculosis infection of the bone (NAS, 1988; EPA, 1991b). Radium-226 and radium-228 are category I contaminants.

Harmful effects of radium result from tissue damage caused by the radioactivity of radium and its daughters (ATSDR, 1990). The dosimetry of radium is controlled by its chemical and radiological properties. Because radium is chemically similar to calcium, it is sequestered in bone, so ingestion or inhalation over a short period results in long-term accumulation. The two main isotopes of radium are: radium-226, with a half-life of 1,600 years, and radium-228, with a half-life of 5.75 years (ATSDR, 1990). The alpha, beta, and gamma radiation released by the decay of radium and their progeny cause ionization of cellular components and the subsequent death or mutation of affected cells (EPA, 1989a).

For about half of known radium dial workers, radium exposure has been calculated from measured body burdens (Rundo et al., 1986). In most cases, only radium-226 was detected, so that exposure to radium-228 is estimated from reports of the ratio of radium-228 to radium-226 in the place of employment. This ratio varied both over time and among companies (Sharpe, 1974; Stebbings et al., 1984). Total radium intake was back extrapolated using the Norris retention function (Norris et al., 1955) and based on the gastrointestinal absorption factor of 20 percent found by Maletskos et al. (1966, 1969), ingestion was assumed to be five times the intake to the blood (Mays et al., 1985).

At higher levels of exposure to radium, several non-cancer health effects occur: benign bone growths, osteoporosis, severe growth retardation, tooth breakage, kidney disease, liver disease, tissue necrosis, cataracts, anemia, immunological suppression and death (ATSDR, 1990). The most sensitive indicator of non-cancer effects is bone necrosis scored by X-ray (Keane et al., 1983). Thirty or more years after exposure, the incidence of bone necrosis in female radium dial painters with total ingestion of radium-226 or radium-228 above 50 $\mu$Ci was significantly higher than in unexposed controls (Keane et al., 1983). However, levels of exposure from naturally-occurring radium are much lower than this threshold, and so bone necrosis and other non-cancer health effects are usually not of concern for radium in drinking water (EPA, 1991b; EPA, 1990g; EPA, 1990n).

Scientists have long recognized that exposed radium dial painters have elevated rates of two rare types of cancer, bone sarcomas (osteosarcomas, fibrosarcomas and chondrosarcomas) and carcinomas of head sinuses and mastoids (Evans et al., 1944; Sharpe, 1974). A recent quantitative analysis of the epidemiologic data (Rowland et al., 1978) found a highly significant excess of bone sarcomas and head carcinomas in a cohort of measured women first employed before 1930. The relative effectiveness of radium-226 and radium-228 in inducing bone sarcomas was estimated to be 1:2.5. The incidence of head carcinomas was associated with exposure to radium-226, but not radium-228 (Rowland et al., 1978). This is

expected if these cancers are due to accumulation of radon gas in the mastoid air cells and paranasal sinuses, because the radon daughter of radium-228, radon 220, decays to Ra-224 too quickly for substantial diffusion to air cells (NAS, 1988). In this cohort, a dose-squared relationship was the best fit of the data for radium-226 and radium-228 induction of bone sarcomas, while a linear relationship was the best fit for radium-226 induction of head carcinomas (Rowland et al., 1978). However, the shape of the dose-response curves are uncertain because radium intake is not known for about one third of the cases of bone sarcomas and head carcinomas.

Patients medically treated with radium-224, a daughter of radium-228, also show an increase in bone sarcomas, but not head carcinomas (Mays and Speiss, 1984). These data are consistent with a linear dose-response relationship (NAS, 1988). The risk coefficient for bone cancer which is used in the RADRISK model is derived from data on exposure to radium-224 (NAS, 1980; EPA, 1991b) because actual exposures to radium-226 and radium-228 to the watch dial painters is not well known, and because of the uncertainty that would be introduced in deriving a linear risk coefficient from significantly non-linear data.

No statistically significant increase in cancers other than bone sarcomas and head carcinomas have been found in cohorts of radium dial painters (Stebbings et al., 1984). Increases in breast cancer and multiple myeloma are better correlated with duration of employment, a surrogate for external dose of gamma irradiation, than with radium intake (Stebbings et al., 1984). The lack of an increase in leukemias is unexpected, because the accumulation of radium in bone would be expected to provide substantial irradiation of potentially leukemogenic cells (Mays et al., 1985), and external irradiation has clearly been established as a cause of leukemia in humans (NAS, 1980). Possible explanations for the lack of observable increase in leukemias include alterations in bone architecture, non-uniformity of irradiation, lethality of irradiation to marrow cells, low frequency of leukemogenic cells in irradiated regions, misdiagnosis of bone marrow diseases, incomplete ascertainment of the cohort, and overestimation either of the risk coefficient for beta and gamma irradiation or of the relative effectiveness of alpha irradiation (EPA, 1991b).

Possible correlations between cancer rates and radium in drinking water have been examined in three studies in the United States. Petersen et al. (1966) found an elevated rate of fatalities from bone malignancies among residents of Iowa and Illinois with elevated radium-226 in drinking water, but the statistical significance was marginal and confounding factors could not be ruled out (NAS, 1988). Bean et al. (1982) found an increased incidence of 4 out of the 10 cancers investigated among Iowa residents of small communities with elevated radium-226 content of the water supply. However, confounding by radon exposure could not be ruled out and cancer sites were different from those observed in dial painters: bladder and lung cancer for males and breast and lung cancer for females. Lyman et al. (1985) found a small but consistent excess of leukemias in Florida counties with elevated radium-226 or radium-228 in private wells, but there was no evidence of a dose-response trend. Rates of colon, lung and breast cancer and lymphoma showed no consistent excess (Lyman and Lyman, 1986).

Animal studies have shown that exposure to radium causes bone sarcoma in mice, rats and dogs and leukemia in mice (ATSDR, 1990). Evans et al. (1944) produced bone sarcomas in rats by both oral exposure for 20 days and intradermal exposure for 2 days to radium-226. Experiments at Argonne National Laboratory using large numbers of CF1 female mice injected once with radium-226 demonstrated a clear increase in bone sarcomas (Finkel et al., 1969). Studies at the University of California at Davis using beagle dogs injected with radium-226 eight times at two-week intervals demonstrated a clear dose-response trend in premature deaths and incidence of bone sarcomas (Raabe et al., 1981). In addition to bone sarcomas, other malignancies associated with radium exposure in animals are eye melanomas in beagle dogs injected with radium-226 or radium-228 (Taylor et al., 1972) and leukemias in mice injected with radium-224 (Humphreys et al., 1985; Muller et al., 1988).

Quantitative estimates of the risks of low level exposure to radium in drinking water were generated by the RADRISK model and adjusted for over-prediction of leukemias lack of separate prediction of head carcinomas by radium-226, and for under-prediction of bone dose and sarcoma risk by radium-228. The resulting risks corresponding to lifetime intake of water containing 1 pCi/l are $4.4 \times 10^{-6}$ for radium 226 and $3.8 \times 10^{-6}$ for radium 228 (EPA, 1991b). An alternative approach to evaluating the risks of radium in drinking water was presented by Mays et al., (1985). These investigators derived linear risk coefficients from the dial painter epidemiologic data, which, as noted above showed a significantly non-linear response for bone sarcoma incidence. Mays et al. (1985) calculated the risks corresponding to lifetime intake of water containing 1 pCi/l radium to be $8.4 \times 10^{-6}$ for radium 226 and $8.8 \times 10^{-6}$ for radium 228. The adjusted risk coefficients used by the Agency in evaluating the risks of radium in drinking water are about half those calculated by Mays et al. (1985), but are considered to be better estimates because of the quantitative uncertainties in the dial painter data concerning ingested dose, cancer incidence, and particularly low dose extrapolation.

There may be several sources of uncertainty in the risk estimates. These are discussed in detail in the Criteria Document (EPA, 1991b), and are briefly summarized here. They include the use of non-linear data for bone sarcomas as one part of a linear low dose extrapolation, lack of statistically significant increases in cancers other than head carcinomas and bone sarcomas in the watch dial painters, even though predicted by the model. While there may be uncertainties in the modeled risk estimates, EPA has evaluated all the available data and believes the approach selected is likely to have fewer uncertainties than other approaches to assessing radium risks at environmental intake levels.

EPA solicits public comment on its estimation of risks from radium in drinking water. In particular, EPA solicits public comment on use of the RADRISK model to assess risks, use of a linear risk model to extrapolate to low doses, and the adjustment of estimated leukemia risks and addition of the head carcinoma risks to the risk estimate, and adjustment of the radium-228 bone sarcoma risks.

In summary, the Agency's assessment of risk of drinking-water exposure to radium is based on the following:

*Radium-226*

- Excess incidence of bone sarcomas and head carcinomas among humans occupationally exposed to radium-226.
- Excess incidence of bone sarcomas among laboratory animals injected with radium-226.
- A calculated mortality risk from lifetime ingestion of radium-226 in drinking water of $4.4 \times 10^{-6}$/pCi/l, assuming 2 liters consumption per day. A lifetime mortality risk of $10^{-4}$ vould

exist at approximately 22 pCi/l radium 226 in water.

*Radium-228*

- Excess incidence of bone sarcomas among humans occupationally exposed to radium-228.
- Excess incidence of bone sarcomas among laboratory animals injected with radium-228.
- A calculated mortality risk from lifetime ingestion of radium-228 in drinking water of $3.8 \times 10^{-6}$/pCi/l, assuming 2 liters consumption per day. A lifetime mortality risk of $10^{-4}$ would exist at approximately 26 pCi/l radium 228 in water.

2. Radon

EPA's primary concern in regulating radon in drinking water is risk from radon released from water to the air in residences. Inhalation is the primary exposure route of concern, lung is the target organ, and lung cancer is the endpoint of primary concern. EPA also believes that some cancer risk to internal organs is posed by ingesting water containing radon, and breathing radon gas, and has developed dosimetric models for estimating risks to internal organs from these exposures (EPA, 1991c).

The Agency has classified radon-222 as a Group A carcinogen based on sufficient evidence for a causal association between exposure to radon and lung cancer in humans (EPA, 1991c; NAS, 1988). In addition, data from studies with experimental animals also provide sufficient evidence for the carcinogenicity of radon. The fact that ionizing radiation is classified as a group A carcinogen provides the basis for considering radon to pose cancer risk when ingested and for radon gas that is inhaled, absorbed and distributed (EPA, 1991p).

a. *Radon risks from inhalation.* Human epidemiologic data have been obtained from groups of underground metal-ore miners mainly in the United States (Colorado Plateau), Canada (Ontario, and Eldorado) Czechoslovakia, Sweden (Malmberget), Newfoundland and Great Britain. These studies have been reviewed by NCRP (1984a,b), NIOSH (1987), ICRP (1987), NAS (1988), DOE (1988), and EPA (1989a).

The Colorado Plateau study represents a large, clearly defined, well-traced population having individual smoking histories and exposure records and a follow-up period exceeding 20 years (as reported in EPA, 19901). As of 1982, the lung cancer deaths had increased to 255 compared with about 50 expected (Standard Mortality Ratio, SMR=510) in a cohort of 3,366 white and 780 nonwhite male miners. The major weaknesses of this study are the great number of mines (2,500) involved (some with few radon exposure measurements), self-reported work histories, and high exposure levels.

The cohort in the Ontario study consisted of 15,094 persons who worked for 1 or more months in uranium mines during the 1954–74 period (as reported in EPA, 19901). Of those with a cumulative Working Level Month (WLM) exposure of 340 WLM or greater by 1986, 14 cases of lung cancer were observed compared with 3–4 expected (SMR=412). (One WLM of exposure is approximately equal to being exposed to radon and its progeny at 200 pCi/1 in air for 170 hours, or 8 hours daily for 20 days.) This study involved low mean cumulative exposures with reasonably good working histories but limited smoking histories.

The Czechoslovakian cohort consisted of 2,433 miners who began mining uranium ore in 1948–52 and had worked at least 4 years underground (as reported in EPA, 19901). For exposures of 12 years or longer, the dose-related increase in lung cancer had been established. For exposures of less than 12 years, a nonlinear relationship existed, so that increasing dose (WLM) did not result in increased risk if exposure was less than 5.6 to 9.5 years. In the 23.5 year group exposed to the highest level of radon (716 WLM), 82 lung cancers were observed compared with 10 expected (SMR=820). Recently, a significant excess of lung cancer was observed in exposure categories below 50 WLM (Sevc et al., 1988). The mean attributable annual cancer risk after about 30 years of observation in the whole study was approximately 20 cases per year per WLM/$10^6$ persons, and in persons starting exposure after 30 years of age the risk was approximately 30 cases per year per WLM/$10^6$ persons.

The Malmberget retrospective mortality study involved a cohort of 1,415 miners who had worked underground for more than one calendar year from 1897 to 1976 (as reported in EPA, 19901). Mean exposure of these miners to radon was estimated to be 93.7 WLMs. The major source of airborne radon and radon progeny was radon dissolved in groundwater. Excess lung (50 observed vs 12.8 expected, SMR=390) and stomach (28 observed vs 15.1 expected, SMR=185) cancers were reported. The excess risk for lung cancer first become evident 20 years after the beginning of underground mining. The low exposure levels, long follow-up period, and stability of the work force are the strengths of this study.

The Eldorado Beaverlodge retrospective cohort study involved 8,487 male miners exposed during 1948 to 1980 (as reported in EPA, 19901). A dose-related increase in lung cancer was seen, although no increased risk was evident at 5 WLM or less. For lung cancer deaths occurring during the 1950–80 period, 54 were observed in the mining group versus 28.27 expected (SMR=191). For those exposed to 150 WLM or greater, 10 cases were observed versus 1.04 expected (SMR=961).

In general, the response in animals to inhaled radon daughters is qualitatively similar to that in humans. However, species response has varied with respect to tumor type and latency period. The animal studies have demonstrated that radon and radon progeny can induce lung cancer in rats and dogs (EPA, 1991c).

Several risk assessments have been conducted to quantify the risk to miners exposed to radon and radon progeny. Recent concern with exposure of the general public to radon in the home environment has prompted the NAS (1988) and the ICRP (1987) to conduct risk assessments.

The NAS (1988) assessment is commonly referred to as the BEIR IV report. The Colorado Plateau, Ontario, Malmberget and the Eldorado Beaverlodge miner cohort data set were analyzed by NAS. It was concluded that the appropriate model would involve the computation of relative risk with consideration of the change in risk with time since exposure (TSE Model). The age-specific lung cancer mortality was calculated for cumulative radiation exposure, in WLM, incurred between 5 and 15 ($W_1$) or > 15 years ($W_2$) before age using the equation:

$$r(\text{age, period, dose history}) = r_o(\text{age})\,[1 + 0.025\gamma(\text{age})(W_1 + 0.5\,W_2)]$$

where $\gamma$ has a value of 1.2 for persons younger than 55 years, a value of 1 for persons 55 to 65 years old, and 0.4 for persons older than 65. Based on this equation, the excess lifetime lung cancer mortality for males was $5.06 \times 10^{-4}$ cases/WLM of lifetime exposure, and the risk for females was $1.86 \times 10^{-4}$ cases/WLM of lifetime exposure. Assuming equal numbers of males and females in the U.S. population, 253 and 93 lung cancer cases in 500,000 exposed males and 500,000 exposed females would result each year (i.e. 350 lung cancer deaths/$10^6$ person-WLM of lifetime exposure).

The ICRP (1987) employed a somewhat different approach. Only three epidemiological sets were considered (Colorado Plateau, Czechoslovakia and Ontario). These were analyzed by both absolute and

relative-risk projection models. However, the proportional hazard model (constant relative risk) was selected for analysis of radon risk in the indoor environmental. It was assumed that the lung cancer rate is proportional to radon exposure and is proportional to the normal lung cancer rate without radon exposure.

The equation for the constant relative-risk, proportional hazard model is:

$\lambda(t) = \lambda_o(t)\,[1 + \int_o^{t-\tau} r(t_e)\,R(t_e)\,dt_e]$ = the mortality rate at age, t

where:

$\lambda_o(t)$ = age-specific lung cancer rate at age, t
$r(t_e)$ = risk coefficient at age of exposure, $t_e$
$R(t_e)$ = age-dependent exposure rate
$\tau$ = time lag (minimal latency)

A correction of 0.8 was used to account for the other carcinogens present in mines but not present in indoor buildings. Another adjustment of 0.8 was made to account for differences in dose to the bronchial epithelium for indoor as compared with miner exposure. This resulted in a risk reduction factor of 0.64. The ICRP also considered the potential for increased sensitivity of young people and assigned an increased risk factor of 3 for exposure to persons age 20 or less. Thus, the final relative-risk coefficients were 0.64%/WLM for those >20 years of age and 1.9%/WLM (3×0.64) for those <20 years of age.

Employing a 10-year lagtime and the 1980 U.S. lifetable and vital statistics at an exposure level of 0.001 WLM/year, ICRP calculated 610 lung cancer deaths/$10^6$ WLM for males and 204 for females (i.e. a combined risk of 420 lung cancer deaths/$10^6$ WLM).

The current EPA estimates for lung cancer risk from radon exposure are based on an averaging of the results of the BEIR IV and ICRP 50 analyses with slight modifications (EPA, 1989a; EPA, 1991c). The EPA has accepted the BEIR IV conclusions that the dose and risk per WLM exposure in residences and in mines are basically identical, and thus no compensation is made for age- and sex-specific tracheobronchial deposition. The ICRP 50 (1987) results have been slightly modified by deleting the risk reduction factor of 0.8 used by ICRP to compensate for differences in dose to bronchial epithelium between household residents and miners. Therefore calculations in the ICRP 50 model were made using risk coefficients of 0.8%/WLM for those >20 years and 2.4%/WLM for those <20 years of age (EPA, 1989a).

The EPA's risk estimate was adjusted for an assumed background exposure of 0.25 WLM/year; the average radon exposure rate was based on 1980 U.S. vital statistics and Nero's radon in residence distribution estimate (Nero et al., 1986).

EPA estimated the excess lifetime risk in the general population due to constant low-level lifetime exposure, based on an average of the BEIR IV and ICRP 50 estimates and the modifications discussed above, at 550 and 190/$10^6$ WLM for males and females, respectively, or a combined risk of 360 lung cancer deaths/$10^6$ WLM, with an estimated range of 140 to 720 lung cancer deaths per $10^6$ WLM (EPA, 1989a).

The occupancy factor of 0.75 is based on studies by Moeller and Underhill (1976) and Oakley (1972), which estimated radiation exposure and population dose in the United States and is supported by more recent reports. An equilibrium factor of radon with its progeny of 0.50 was estimated (EPA, 1991i), and EPA estimates that 10,000 pCi/1 radon in water will contribute about 1 pCi/1 to the air of a house, on average (EPA, 1991h).

The risk estimates for excess lung cancer deaths due to inhalation of radon can be used in estimating the risk of radon in water (EPA, 1991c). Using the above assumptions, the risk estimate of 360 deaths/$10^6$ WLM is converted to units of deaths/pCi/1 water as follows:

$$\text{Risk } (\text{pCi}/1_{water}) = (360 \text{ deaths}/10^6 \text{ WLM}) \times (51.6 \text{ WLM/WL-yr}) \times (70 \text{ yr}) \times (0.5 \text{ WL}/100 \text{ pCi}/1_{air}) \times (10^{-4} (\text{pCi}/1_{air})/(\text{pCi}/1_{water})) \times (0.75) = 4.9 \times 10^{-7} \text{ deaths/pCi}/1_{water}$$

Lifetime individual risk for lung cancer of $5 \times 10^{-7}$ deaths per pCi/1 water was estimated for inhaled radon daughters (EPA, 1991c).

However, EPA is in the process of reviewing and revising its estimate of radon risk. This review is based on the conclusions of the recent report by the National Academy of Science entitled "Comparative Dosimetry of Radon in Mines and Homes" (NAS, 1991), on results of the National Residential Radon Survey and also on comments received by EPA on the background document supporting revisions to the Citizen's Guide to Radon. The study by NAS was funded by EPA to help reduce the uncertainties of using miner data to estimate radon risks in the home. EPA has submitted a revised risk assessment to the SAB/RAC for their review, and will revise the risks estimated here, if appropriate, when the SAB/RAC completes its review and provides EPA comments. This revised risk evaluation was discussed by the SAB/RAC at a meeting held May 20 and 21, 1991. EPA anticipates that the lung cancer risk estimate for radon by inhalation (based on the epidemiology studies) may be reduced by as much as 30% in the final revised estimate (EPA, 1991l).

As a volatile gas, radon may also be absorbed via inhalation and distributed throughout the body, posing some risk to internal organs. The human epidemiology studies do not account for this risk. EPA estimated the risk to internal organs from inhaled radon gas, using the RADRISK model, the 0.75 occupancy factor, an estimated breathing rate of 22,000 liters daily (EPA, 1989a) and the 10,000:1 water to air transfer factor (EPA, 1991h), as $2 \times 10^{-8}$ deaths per pCi/$1_{water}$. Details of this calculation are provided in the Health Criteria Document for radon (EPA, 1991c).

EPA has also reviewed information on the interaction of smoking and lung cancer risk from radon. The BEIR IV committee (NAS 1988) concluded that the data show a multiplicative interaction between smoking and radon exposure in causing lung cancer, not an additive interaction. In reviewing the relative risks from radon to smokers EPA (EPA 1990i; EPA 1991c) estimated risk multipliers applicable to the population average risks for different categories of smokers. The categories include non-smokers, former smokers, and current smokers of different numbers of cigarettes. For non-smokers, estimated risks from radon are about 20% of the overall average population risk; for former smokers, radon risks are about 80% of the average risk. For current smokers, estimated risks range up to about 450% of the average population risk (40+ cigarettes per day), with a smoker average of 180% of overall average population risk. Heavy smokers are therefore at considerably greater risk from radon exposure than is the general population.

b. *Radon risk via ingestion.* EPA's assessment of the risk associated with radon when ingested is less certain than the estimate of risk by the inhalation exposure route. No experimental or epidemiologic data link exposure via ingestion to increased cancer rates.

In the present assessment, EPA has estimated the risk from ingestion of radon-222 in drinking water using data on organ doses recently developed for the Agency by Crawford-Brown (1990). In developing these dose estimates, Crawford-Brown used the results of biokinetics studies carried out by Correia et al., (1987; 1988) using xenon-133, a gas that behaves similarly to radon-222. Hess and Brown (1991) have also studied retention and clearance rates of radon gas when ingested in water.

Crawford-Brown developed mathematical models of the movement and accumulation of radon-222 within the various organs of the body following ingestion. Rate constants for movement of radon-222 within the various body organs were also developed. Using these models, the concentration of radon-222 in body organs was calculated under steady-state conditions.

EPA used these dose factors, an estimated 1 liter daily intake of freshly drawn directly consumed tap water and a 20% correction for radon loss from water during the process of drawing and consuming a glass of water (discussed in Section III.C above, and EPA, 1991h), in estimating the risk from ingested radon. EPA calculated the lifetime risk from ingestion of radon-222 in drinking water to be $1.5\times10^{-7}$ per pCi/l (EPA, 1990c; 1991c). This is about 20% of the risk estimated from inhalation of radon-222 progeny from domestic use of water.

The total estimated risk for radon in water is $6.6\times10^{-7}$ per pCi/l. This gives an estimated $1\times10^{-4}$ individual lifetime risk at approximately 150 pCi/l in water for all water related exposure to radon (EPA, 1991c).

EPA estimates that approximately five percent of total indoor air radon is attributable to radon from drinking water on average, for homes served by groundwater. The NIRS occurrence survey showed average radon levels in public water ground water supplies to be 650 pCi/l, with a maximum reported level of 26,000 (although many private wells are known to have higher levels; EPA, 1990f). EPA estimates that approximately 200 (75 to 400) cancer fatalities per year are attributable to radon in drinking water, 80%, or 160 of which are estimated to be due to lung cancer (EPA, 1991i). Of these, approximately 85% may involve synergism with smoking. Overall, radon in homes is estimated to account for approximately 8,000 to 40,000 lung cancer deaths annually (EPA, 1989g; 1990m). Individual risks at the 4 pCi/l indoor air action level are approximately 1–5 in 100 (EPA, 1986f).

There may be several sources of uncertainty in the radon risk estimates. These are discussed in detail in the Criteria Document (EPA, 1991c), and are briefly summarized here. They include variability in the contribution of radon in water to indoor air radon levels, differences in homes and the mine environment, and estimates in distribution and effective dose to tissue of ingested radon. While there may be uncertainties in the risk estimates, EPA has evaluated all the available data and believes the approach selected is likely to have fewer uncertainties than other approaches to assessing radon risks.

EPA solicits public comment on its assessment of risks from radon in drinking water. In particular, EPA requests comment on its estimate of water contributions to indoor air levels of radon and exposure during showering, and its estimate of risks due to directly ingesting radon in water.

3. Uranium

Exposure to uranium (U) is of concern because of the radioactive nature of uranium and its ubiquitous occurrence in the environment, including water supplies. Kidney toxicity and carcinogenicity are the primary adverse effects of concern associated with exposure to uranium (EPA, 1991e). EPA proposes to regulate uranium at the level that will be protective of both its kidney toxicity, and its carcinogenic potential as well. Studies in both humans and animals show uranium toxicity to the kidneys. The EPA has also classified uranium in Group A as a human carcinogen (sufficient evidence of carcinogenicity in humans) based on the fact that uranium emits alpha radiation, a well-established carcinogen (which is also classified in Group A; EPA, 1991p), and uranium is an analogue of radium-226, a well-known human carcinogen in bone (EPA, 1991e).

a. *Carcinogenicity.* The carcinogenic effects of uranium have been characterized based on effects of ionizing radiation generally, the similarity of uranium to isotopes of radium and on the effects of high activity uranium. Ionizing radiation has been classified by EPA as a Group A carcinogen, and EPA considers all emitters of ionizing radiation to be carcinogenic (EPA, 1991p). Studies have also shown that uranium, like radium, accumulates primarily in bone, and that bone sarcomas may result from radium ingestion (EPA, 1991b; 1991e). The induction of bone sarcomas is regarded as a common property of both radium and uranium, which is believed to result from the alpha emissions of these nuclei as they decay. Finally, studies of enriched and high activity isotopes of uranium have shown them to be carcinogenic in animal studies.

Studies using natural uranium do not provide direct evidence of carcinogenic potential (EPA, 1991e). Malignant tumors were observed in mice following injection of uranium-232 or uranium-233 (at levels greater than 0.1 $\mu$Ci/kg), but not following injection of natural uranium (Finkel, 1953), probably because radiation dose levels were about 100-fold lower than the dose at which the tumors were observed for uranium-232 and -233 by injection. Highly enriched uranium (i.e., uranium enriched with the more radioactive isotopes) has been shown to induce bone sarcomas in rats (NAS, 1988).

Existing human epidemiology data are inadequate to assess the carcinogenicity of uranium ingested in drinking water (EPA, 1991e). However, some epidemiological data do suggest that inhalation exposure to uranium or direct exposure to uranium deposits may be carcinogenic in humans. Polednak and Wilson (as cited in Dupree et al., 1987) found nonstatistically significant increases in cancers of the digestive organs in workers exposed to airborne uranium, although confounding variables were present (EPA, 1991e). Wilkinson (1985) reported higher mortality rates from gastric cancer in New Mexico counties located over uranium deposits. However, other etiological factors (such as radon progeny and trace elements) may be involved (EPA, 1991e).

EPA estimated the carcinogenic risk associated with uranium exposure using the RADRISK dosimetric model, as described in the revised Drinking Water Criteria Document for uranium (EPA, 1991e). EPA's earlier draft of this document (EPA, 1989f) and earlier risk assessment used a gastrointestinal uptake ($f_1$) factor of 0.20, which is revised in the updated Criteria Document (EPA, 1990e; 1991e) to 0.05 in response to comments by the SAB/RAC. While EPA believes the 0.05 value represents a best estimate, the wide range of values reported in the literature for the uranium $f_1$ (from less than 0.01 to 0.30) indicate that there may be substantial uncertainty associated with the 0.05 value. The individual studies bearing on this issue are described in the updated Criteria Document (EPA, 1991e). EPA solicits public comment on the issue of the uranium $f_1$ value.

Using a gastrointestinal uptake ($f_1$) factor of 0.05, risks of fatal cancer estimated using the RADRISK model indicated that uranium in water poses cancer risk of approximately $5.9\times10^{-7}$ per pCi/l, assuming 2 liters daily intake. Concentrations in water of 1.7 pCi/l, 17 pCi/l and 170 pCi/l correspond to lifetime mortality risks of approximately $1\times10^{-6}$, $1\times10^{-5}$ and $1\times10^{-4}$, respectively.

b. *Non-cancer effects.* The major target organ of uranium's chemical toxicity is the kidney (Hodge, 1973; Leggett, 1989; EPA, 1991s). Based on available toxicity data, rabbits have been identified as the most sensitive species (data summarized in Table 3). In humans, symptoms of transient

albuminuria and edema of the skeletal muscle developed in several laboratory workers exposed to combined vapors of uranium hexafluroride, uranium oxyfluoride, and hydrofluoric acid (Howland, 1949). However, vapor concentration was not measured. Some of the effects may have been attributable to the direct action of fluoride, since the workers were exposed to a mixture of chemicals; the transient renal effects, however, may be related to the toxic action of absorbed uranium (Haven and Hodge, 1949).

TABLE 3.—A COMPARISON OF 30-DAY, 1-YEAR, AND 2-YEAR NOAELS/LOAELS FOR URANIUM TOXICITY

| Species/compound | NOAEL (mg U/kg/day) | | | LOAEL (mg U/kg/day) | | |
|---|---|---|---|---|---|---|
| | 30-day | 1-yr | 2-yr | 30-day | 1-yr | 2-yr |
| Rat: | | | | | | |
| $UO_2F_2$ | 19 | 19 | 19 | 39 | 39 | 39 |
| $UO_2(NO_3)_2$ | 24 | 24 | 24 | 120 | 120 | 120 |
| $UF_4$ | 760 | 760 | 760 | 7,600 | 7,600 | 7,600 |
| Dog: | | | | | | |
| $UO_2F_2$ | 4 | 8 | NT | 8 | 19 | NT |
| Rabbit: | | | | | | |
| $UO_2(NO_3)_2$ | ND | NT | NT | 2.8 | NT | NT |

NT = Not tested.
ND = Not determined.
NOAEL = no observed adverse effect level
LOAEL = lowest observed adverse effect level
Source: Maynard and Hodge (1949, as cited in U.S. EPA, 1991e).

Nephrotoxicity has been reported in rats, rabbits, and/or dogs fed various soluble uranium compounds for periods of 30 days, 1 year, or 2 years (Maynard and Hodge, 1949; Maynard et al., 1953). Treatment-related histopathological changes were observed in the kidneys of rats fed $UO_2F_2$, $UO_2(NO_3)_2 \cdot 6H_2O$, and $UCl_4$. No histopathologic changes were found in the kidneys of rats fed insoluble uranium compounds. Acute (30 day) exposure of rabbits to uranyl nitrate down to 2.8 mg/kg/day in the diet resulted in renal damage at all dose levels (Maynard and Hodge, 1949; EPA, 1991s).

Renal toxicity has also been demonstrated in rats and dogs following administration of various uranium compounds in the diet for 1 or 2 years. A summary of NOAEL and LOAEL values derived from these studies is presented in Table 4.

TABLE 4.—SUMMARY OF NOAEL AND LOAEL VALUES

| Compound | NOAEL percent | LOAEL percent | Effect |
|---|---|---|---|
| Uranyl nitrate | 0.1 | 0.5 | Body weight depression, mild tubular necrosis of kidneys. |
| Uranyl fluoride | 0.05 | 0.1 | Body weight depression. |
| Uranyl nitrate | 0.1 | 0.5 | Body weight depression, kidney changes. |
| Uranyl tetrafluoride | 2 | 20 | Body weight depression, kidney changes. |
| Uranium dioxide effects | | 20 | No toxic |

Source: Maynard and Hodge (1949, as cited in U.S. EPA, 1991e); Maynard et al. (1953, as cited in U.S. EPA, 1991e).

The mechanism of action of uranium in renal toxicity is not fully understood (Leggett, 1989). Nephritis and changes in urine composition are the primary symptoms (EPA, 1991e). Morphologically, the most evident changes occur in the proximal convoluted tubule of the nephrons. Necrosis of the tubular lining occurs first, followed by a clogging of the tubules with cellular debris and appearance of the debris (casts) in the urine. Regeneration of tubular lining cells within 2 to 3 weeks can occur in nonfatal cases, but the cells are not normal in appearance. The mechanism of action may involve interference with sodium transport across membranes, damage to lysosomes, or destruction of functional properties in mitochondria (EPA, 1991e).

In addition to renal effects, animal studies also indicate that exposure to uranium may be associated with dermal, ocular, teratogenic/reproductive, and hepatic effects as well as lethality, at higher exposures (EPA, 1991e). Histopathological changes (distortion of centrilobular and perilobular zones) were observed in the livers of rats fed 20 mg (9.5 mg U/kg) uranyl nitrate.

Oral administration of uranium to rats and mice has resulted in embryo lethality, adverse fetal and neonatal development, increased fatal resorption, reduced fetal body weight and length, adverse functioning of the reproductive system, and increased number of dead young/litter at birth and at lactation (Paternian et al., 1989; Domingo et al., 1989a; 1989b; Maynard et al., 1953). Brandom et al. (1978) found a significant increase in the prevalence of chromosomal aberrations in uranium miners as compared with controls.

EPA identified the LOAEL as 0.02 ppm uranyl nitrate hexahydrate in food, converted to 2.8 mg uranuim/kg/day, based on the kidney toxicity in rabbits (Maynard and Hodge, 1949; See Table 3). EPA applied a 1000 fold uncertainty factor to derive an RfD of $3 \times 10^{-3}$ mg/kg/day (EPA, 1991s; 1991e). EPA multiplied the RfD by 70 kg and divided by 2 liters daily water intake, to derive the DWEL of 100 $\mu$g/1. If EPA were basing the MCLG on kidney toxicity, the 20% relative source contribution would be applied as discussed above. This would result in a MCLG based on kidney toxicity 20 $\mu$g/1.

EPA is proposing to set the MCLG at zero because of uranium's carcinogenicity. However, EPA is proposing to limit the MCL because of

kidney toxicity, because of the low carcinogenic potency of uranium. EPA believes drinking water MCLs must be protective of the public against all adverse health effects.

There may be several sources of uncertainty in the uranium risk evaluation. These are discussed in detail in the Criteria Document (EPA, 1991e), and are briefly summarized here. They include in particular for the uranium cancer risk estimate the $f_1$ factor, as well as the lack of confirmation of uranium's carcinogenicity in the available epidemiology studies. For kidney toxicity, uncertainties in uranium exposures from other sources may lead to uncertainty. While there may be uncertainties in the assessment of uranium's adverse affects, EPA has evaluated all the available data and believes the approach selected is likely to have fewer uncertainties than other approaches to assessing uranium risks.

EPA solicits public comment on the proposed MCLG of zero for uranium, including the $f_1$ factor, uranium's carcinogenicity, and kidney toxicity as the limiting adverse health effect.

4. Beta Particle and Photon Emitters

"Beta and photon emitters" are a broad group of mostly man-made radionuclides which characteristically decay by beta and photon emissions, which are ionizing radiation. EPA has classified ionizing radiation as a group A carcinogen (EPA, 1991p). Accordingly, the Agency considers beta and photon emitters Group A human carcinogens.

Beta and photon emitters are radionuclides that decay primarily by electron and/or photon emissions and are usually man-made. These low energy radiation emitters (low-LET) include beta emitters (electrons or positrons), gamma emitters, and x-ray emitters. There are a large number of radionuclides of concern, and each radionuclide/element has different absorption and retention properties and decay schemes. Differences in energy of irradiation, type, and geometry of irradiation also exist.

Despite differences in radiation type, energy, or half-life, the health effects from radiation are identical (EPA, 1991d), but may occur in different target organs and at different activity levels. Nonstochastic effects occur at relatively high doses of radiation but not at doses of typical environmental exposure and regulatory interest. Radionuclides having a half-life of 1 hour or less are not considered in the group proposed for regulation, since they will decay prior to consumption of drinking water. For a stochastic effect such as cancer, the probability of the effect increases with increasing dose, and it is assumed that a threshold does not exist. The cancers produced by radiation cover the full range of carcinomas and sarcomas. Many forms of cancer have been shown to be induced by radiation (ICRP, 1977; NAS, 1990). The epidemiological basis for risk estimates specific to irradiation have been reviewed in detail in BEIR III (NAS, 1980) and by U.S. EPA (1989a). Since the available data suggest that lowered dose rates of low-LET radiation yield a lowered cancer risk, the use of risk coefficients from A-bomb survivors (which are the result of very high dose rates) will probably not underestimate risk from low-LET radiation (EPA, 1991d).

The methodology used in risk calculations is formalized in the RADRISK computer code. The calculations assume an average lifetime of 70.7 years and a cohort of 100,000 persons (Dunning et al., 1980; Sullivan et al, 1981; EPA, 1989a; 1991d). Equivalent organ doses consider the concentration of the radionuclide, the intake of water, the absorption of the radionuclide from the gastrointestinal tract into the bloodstream, the distribution to various organs or compartments, the retention, and the radiologic decay in each organ. The absorption (characterized by $f_1$) and fraction deposited in the organ or compartment ($f_2'$) are functions of the chemical form and of age. The values of $f_1$ and $f_2'$ and the retention functions for each radionuclide and chemical form are taken mostly from the tabulations in ICRP Publication 30 (ICRP, 1979; 1980; 1981); Sullivan et al., (1981) and Dunning et al. (1984). Organ masses are values from ICRP Publication 23 for adults (ICRP, 1975). The model integrates the organ burden for each year of life to obtain an annual burden, which is corrected for age with a nuclide-specific S-factor. The S-factors (units of dose equivalent per Ci-day) are derived by calculating the number of decays in the organ during residence and the energy absorbed as the result of the decays. Using these parameters, the dose delivered to each organ as the result of a unit intake of each radionuclide is calculated to obtain the annual dose rate. The target organs for dose estimation specified by the RADRISK code are ovaries, testes, breast, red marrow (for leukemia), lungs, thyroid, endosteal cells, stomach, lower and upper large intestine, small intestine, kidneys, bladder, spleen, uterus, thymus, thyroid, liver, and pancreas (EPA, 1989a; 1991d).

The risk factor associated with exposure to 1 Sv (Sievert; 1 Sv=100 rems) that is adopted is $39{,}000/10^6$ persons (or for 1 rem, $4\times10^{-4}$ persons; EPA, 1989a;). This risk factor is an age-adjusted estimate for cancer resulting from low-level, whole-body, low-LET radiation. At an exposure rate of 1 mrem/year, based on the above risk factor, and a lifetime of 70.7 years, the lifetime probability (P) of a radiation-induced fatal cancer is $2.8\times10^{-5}$ per mrem ede per year. For the purpose of setting standards, the EPA generally considers allowable values for lifetime risk to lie between $10^{-6}$ and $10^{-4}$. A lifetime cancer risk of approximately $10^{-4}$ corresponds to 4 mrem ede/yr.

Appendix B lists the concentrations in pCi/1 that correspond to 4 mrem ede/year for each beta emitter, assuming lifetime intake of 2 liters of water daily.

There may be several sources of uncertainty in the beta and photon emitters risk evaluation. These are discussed in detail in the Criteria Document (EPA, 1991d), and are briefly summarized here. They include uncertainty in the metabolic model, including absorption, distribution and dosimetry, and the risk coefficients used for calculating risk. While there may be uncertainties in the assessment of beta and photon emitter risks, EPA has evaluated all the available data and believes the approach selected is likely to have fewer uncertainties than other approaches to assessing risks from beta and photon emitters.

EPA solicits public comment on its approach to estimating risks from beta and photon emitters in drinking water.

5. Alpha Emitters

EPA considers all ionizing radiation to be carcinogenic, and has classified the ionizing radiation released during alpha decay as a Group A carcinogen (EPA, 1991p). Therefore, as a class, alpha emitting radionuclides are considered group A carcinogens. There are also adequate data on some individual alpha emitters to conclude that they are carcinogenic. Accordingly, the Agency has placed alpha emitting radionuclides as a class in Group A as known human carcinogens (EPA, 1991a).

Alpha emitters are primarily naturally occurring, deriving from the uranium and thorium decay series. There are a more limited number of alpha emitting radionuclides (than beta emitters) that are of potential concern in public water supplies, as only a few alpha emitters have ever been reported in the published literature to occur in water. In addition to the naturally occurring radionuclides, plutonium and americium, man-made alpha emitters, may also be of concern, although these have only been found at very low (less

than 0.1 pCi/l) concentrations in drinking water (See section III.F).

As for the beta and photon emitters, risks from ingestion of alpha emitters can be evaluated using a modelling approach, combined with radionuclide-specific epidemiology or animal studies where available. Despite differences in radiation type, energy, or half-life, the health effects from radiation are identical, although they may occur in different target organs and at different activity levels. Nonstochastic effects occur at relatively high doses of radiation but not at doses of typical environmental exposure and regulatory interest. For a stochastic effect such as cancer, the probability of the effect increases with increasing dose, and it is assumed that a threshold does not exist. The cancers produced by radiation cover the full range of carcinomas and sarcomas. Essentially every form of cancer has been shown to be induced by radiation (ICRP, 1977; NAS, 1988; 1990). The type of cancer caused depends largely on where the radionuclides localize in the body as a result of metabolism. Radionuclides that are deposited in bone frequently cause bone sarcomas. Widely distributed radionuclides may increase cancer risk for many organs (EPA, 1991a). The epidemiologic basis for risk estimates specific to irradiation have been reviewed in detail in BEIR III (NAS, 1980) and by EPA (1989a). For internally deposited alpha emitters, the BEIR IV report (NAS, 1988) reviewed available information.

Risk assessment for the alpha emitters was performed using the RADRISK model (EPA, 1991a). The criteria document for alpha emitting radionuclides describes the metabolic model as do Dunning et al. (1980): Sullivan et al. (1981); and EPA (1989a), and as described above for the beta emitters. The model estimates radiation dose to organs, the dose is used to calculate risk to the organs, and the risks to organs are summed to estimate overall risk. Levels of the alpha emitters representing $10^{-4}$ lifetime risk in drinking water (assuming ingestion of 2 liters daily) are presented in Appendix C.

Specific alpha emitters of interest include polonium, thorium, plutonium and possibly americium as these have been found in water. There are some human epidemiology and animal data available to help in assessing the risks posed by the individual contaminants. However, there are not complete enough data on any of them to form the basis of a risk assessment, and EPA has determined that the RADRISK modelling approach will provide the best estimates of the hazards posed by these contaminants (EPA, 1991a).

Polonium-210 is in the uranium-238 decay series, and is the daughter of lead-210, the first long-lived daughter of radon 222. The BEIR IV (NAS 1988) report reviewed the available literature on polonium. Polonium was reported to cause lymphomas in mice, and various soft tissue tumors in rats given polonium. In addition, a number of non-neoplastic adverse effects were reported in test animals, including sclerotic changes in the blood vessels, atrophy of the seminiferous epithelium and hyperplasia of the interstitial (Leydig) cells in the testes, and other effects, but all at relatively high doses. Effects in exposed humans including hematologic changes, impairment of the liver, kidney and reproductive organs, were reported by the BEIR IV committee. The BEIR IV committee concluded that there is no direct measure of risk for most polonium isotopes based on the human data, and suggested several possible means of estimating risk. EPA, as discussed, has relied on its RADRISK model in assessing polonium risk. The model estimates that polonium at 14 pCi/l in water (assuming 2 liters daily intake) would pose an approximate lifetime cancer risk of $1\times10^{-4}$ (EPA, 1991a). Several public water supplies and private wells have exceeded this value, although most reported polonium levels were in the range of 1 to 10 pCi/l (EPA, 1991f).

The BEIR IV committee also reviewed available information on the adverse effects of thorium. Substantially better information (than for polonium) is available for human exposure because a colloidal form of thorium dioxide ($ThO_2$; Thorotrast) was used in medical radiology as a contrast agent from the 1920's until about 1955. Patients were injected with the Thorotrast. The colloidal particles posed a radiation risk to the reticuloendothelial system in which they were ultimately sequestered after injection. Various studies of the Thorotrast patients showed clear increases in liver cancers, as well as possible increases in leukemia. However, the BEIR committee discussed the limitations of these data for assessing the risk due to other forms of thorium. Forms of thorium other than $ThO_2$ would have a different metabolic fate than the Thorotrast, and would affect different organs. Therefore, EPA believes a dosimetric approach, as contained in the RADRISK model, provides the best available basis for assessing risk from the various thorium isotopes. Based on the model results, EPA estimates that the various thorium isotopes pose lifetime cancer risks of $1\times10^{-4}$ at drinking water concentrations ranging from 50 pCi/l to approximately 125 pCi/l (EPA, 1991a). Most reported thorium occurrence in drinking water was at levels near 1 pCi/l (EPA, 1991f).

Plutonium is widely present at very low levels in the environment, largely as a result of atmospheric nuclear weapons testing from 1945 to 1963. It is also found in nuclear power reactors and could be released in the event of an accident. The BEIR IV committee reviewed available data on plutonium and other transuranics. They concluded that studies in animals clearly indicate bone, liver, and lung (by inhalation) cancers caused by plutonium exposure. However, available (and limited) human epidemiology studies have not yet shown unequivocal association between plutonium exposure and cancer at any particular anatomical location. The Committee recommended risk assessment based on analogy with other radionuclides and high LET radiation exposure risks. EPA has used its RADRISK model to assess plutonium risks. The RADRISK model estimates that lifetime cancer risks of approximately $1\times10^{-4}$ are posed by drinking water plutonium concentrations of about 7 pCi/l for the different plutonium isotopes (EPA, 1991a). Reported plutonium levels in drinking water were less than 0.1 pCi/l (EPA, 1991f).

Estimated risks for these and other alpha emitting compounds can be found in appendix C.

There may be several sources of uncertainty in the alphas risk evaluation. These are discussed in detail in the Criteria Document (EPA, 1991a), and are briefly summarized here. They include uncertainty in the metabolic model, including absorption, distribution and dosimetry, and the risk coefficients used for calculating risk. While there may be uncertainties in the assessment of risks, EPA has evaluated all the available data and believes the approach selected is likely to have fewer uncertainties than other approaches to assessing risks from alpha emitters.

EPA solicits public comment on its assessment of risks from alpha emitting radionuclides in drinking water.

*D. MCLG Determinations*

For the reasons stated in the preceding sections on health effects and risks (e.g., the fact that all of these radionuclides are Group A, known human carcinogens) and based on the Agency's policy of setting MCLGs for

known or probable human carcinogens at zero, the Agency is proposing to set MCLGs of zero for radon, radium-226, radium-228, uranium, and alpha and beta particle and photon emitters.

## V. Proposed Maximum Contaminant Levels

### *Summary of the Proposal*

The SDWA directs the Agency to set an enforceable standard for a contaminant (MCL) as close to the health goal for the contaminant (MCLG) as is "feasible". Feasible is defined as the use of the "best technology, treatment techniques and other means which the Administrator finds * * * are available (taking cost into consideration)". (Section 1412(b)(5).) In determining MCLs, the Agency considers a number of factors. The Agency evaluates the availability and performance of the various technologies capable of removing the contaminants, identifying those that have the highest removal efficiencies, that are compatible with other types of water treatment processes, and that are not limited to application in a particular geographic region. As the MCL levels must be generally enforceable, EPA also considers the ability of laboratories to measure reliably for the contaminants in water. EPA derives practical quantitation levels (PQLs) which reflect the contaminant concentration that can be measured by good laboratories under normal operating conditions within specified limits of precision and accuracy.

The Agency also considers the health risk associated with the contaminant. The Agency estimates both the incidence of disease and the risk to individuals. EPA has historically set a reference risk range for carcinogens at $10^{-4}$ to $10^{-6}$ lifetime individual risk; risks within this range have been considered acceptable.

### *The Role of Costs in Setting MCLs*

In setting MCLs, the Agency also considers a number of cost elements. In the past, EPA has generally limited consideration of economic costs under the SDWA to whether a technology is affordable for large municipal water systems. (52 FR 42225 Nov. 3, 1987; "the legislative history indicates that EPA is to base MCLs on treatment technology affordable by the largest public water systems"). However, EPA has determined that nothing in the statutory language, the legislative history or EPA's prior constructions of the statute precludes consideration of cost-effectiveness in setting MCLs under the SDWA (EPA, 1990o).

EPA's focus on affordability for large systems in the past is consistent with statements in the 1974 House Committee Report:

> In determining what methods are generally available, the Administrator is directed to take costs into account. * * * It is evident that what is a reasonable cost for a large metropolitan (or regional) public water system may not be reasonable for a small system which serves relatively few users. The Committee believes, however, that the quality of the Nation's drinking relatively few users. The Committee believes, however, that the quality of the Nation's drinking water can only be upgraded if the systems which provide water to the public are organized as to be *most cost-effective. In general*, this means larger systems are to be encouraged and smaller systems discouraged. *For this reason*, the Committee intends that the Administrator's determination of what methods are generally available (taking cost into account) is to be afforded by large metropolitan or regional public water systems.

H.R. Rep. No. 93–1185, *A Legislative History of the Safe Drinking Water Act*, 97th Cong. second session, pp. 549–550 (1982) (emphases supplied). Far from prohibiting cost-effective solutions to the Nation's drinking water problems, the legislative history indicates that Congress wanted to encourage cost-effectiveness, but thought that promoting consolidation of small drinking water systems into larger ones would promote cost-effective solutions in the circumstances that prevailed in 1974. EPA has concluded that in light of changing circumstances since 1974, including the large number of MCLs that have been established in the meantime under the SDWA, it is no longer appropriate to focus exclusively on large system costs in order to promote cost-effective solutions that protect human health from contaminants in the nation's drinking water.

In addition to the statements in the 1974 House Committee Report, a 1986 floor statement by Senator Durenberger might be read to suggest that consideration of large system affordability is the only permissible role for considering costs under the SDWA.[1] However, EPA believes that, in context, the 1986 Durenberger floor statement was not in fact intended to preclude consideration of cost-effectiveness, as opposed to cost-benefit analysis.[2] Nowhere in his floor statement does Senator Durenberger reject considerations of cost-effectiveness (as opposed to cost-benefit) in setting MCLs. On the contrary, later in the same floor statement, Senator Durenberger refers to considering cost-effectiveness with approval in the context of using granular activated carbon (GAC) technology to establish MCLs. 132 Cong. Rec. S6294. EPA believes that it would be anomalous and contrary to Congressional intent to sanction using cost-effectiveness considerations in setting MCLs using one technology (GAC), which Congress clearly intended, but to prohibit consideration of cost-effectiveness in setting MCLs using other technologies which raise very similar issues.

Similarly, neither the statutory language nor EPA's prior constructions preclude considering the cost-effectiveness of requiring additional increments of technology or contaminant control in establishing MCLs. The statute requires EPA to establish the MCL as close to the maximum contaminant level goal ("MCLG") "as is feasible." SDWA Sec. 1412(a)(4), 42 U.S.C. 300g–1(a)(4). The term "feasible" is in turn defined as:

> * * * feasible with the use of the *best* technology, treatment techniques and other means which the Administrator finds, after examination for efficacy under field conditions and not solely under laboratory conditions, are available (*taking cost into consideration*).

SDWA sec. 1412(a)(5), 42 U.S.C. 3009–1(a)(5) (emphasis supplied). The dominant emphasis in the statutory language is on achieving practical results.[3] Furthermore, far from

[1] In the floor debates on passage of the conference report for the 1986 amendments to the SDWA, Senator Durenberger stated that the amendments were "not an instruction for the administrator to conduct a cost-benefit analysis to determine the MCL. The law emphatically does not provide that the administrator will set the MCL at a level where benefits outweigh costs, nor does it require EPA to balance costs and benefits in any other way. *Cost only enters into the judgment of the administrator in defining which treatment technologies are to be considered best available technologies.* And availability in this instance is considered only in the context of the largest supply systems." 132 *Cong. Rec.* S6287 (May 21, 1986).

EPA's approach to considering cost-effectiveness in this rule is consistent with the literal language of Senator Durenberger's floor statement, in that EPA is considering cost-effectiveness in the context of determining which technology should be deemed "best available technology," and these cost-effectiveness considerations apply to large as well as small systems.

[2] In any event, even if the Durenberger floor statement had been intended to restrict EPA's discretion to consider costs in any way other than large system affordability (which EPA does not believe that it was), legally it could not have that effect. Floor statements by individual legislators, while entitled to some weight, do not effectively restrict agency discretion to adopt statutory interpretations which are otherwise reasonable and consistent with the statute, as recent Supreme Court cases have made clear. See, *e.g. Brock* v. *Pierce County*, 476 U.S. 253, 263 (1986).

[3] One factor indicating that Congress intended the standard-setting exercise to focus on obtaining

Continued

precluding consideration of economics in setting MCLs, EPA is specifically instructed to "tak[e] cost into consideration" in determining whether a technology is available.

EPA does not believe that Congress's instruction to take economic costs into account in determining whether technologies are available was intended to preclude consideration of economic cost-effectiveness in determining which technology, or level of technology, is "best." As a matter of the ordinary meaning of language, if two technologies or levels of control achieve comparable or nearly comparable results, but one of them is much more efficient or cost-effective than the other, the more wasteful and expensive one could hardly be said to be the "best."

This plain language interpretation of "best" available technology as permitting some weighing of economic costs is reinforced by the fact that EPA has construed "best available technology" requirements in other environmental statutes to encompass cost-effectiveness, but generally not cost-benefit considerations. For example, EPA has long interpreted "best" available control technology for purposes of the PSD program under the Clean Air Act as incorporating cost-effectiveness considerations (EPA, 1979a; unreasonable adverse economic effects of an available control technology, as demonstrated by an incremental analysis of that option relative to others, are an adequate basis to reject an alternative). EPA's interpretation of the "best" available technology requirement under the Clean Air Act as allowing consideration of cost-effectiveness has been upheld by the courts. See, *e.g., Northern Plain Resource Council* v. *EPA,* 645 F.2d 1349 (9th Cir. 1981) (affirming EPA's rejection of an available control option on cost-effective grounds under the "best available control technology" requirements of the PSD program under the Clean Air Act).

From the standpoint of facilitating sound environmental policy, it makes little sense to set multiple MCLs based solely on considerations of the ability of large systems to afford each individual MCL. Rather, EPA believes that the overall purposes of the Safe Drinking Water Act, assuring the overall safety of the Nation's drinking water supply, will be best effectuated by a consideration of cost-effectiveness. In addition, EPA has historically set its MCLs based on $10^{-4}$ to $10^{-6}$ lifetime risk to an exposed individual. See for example 40 CFR part 300 (National Contingency Plan), 40 CFR part 61 (Benzene NESHAPs, 54 FR Contingency Plan), 40 CFR part 61 (Benzene NESHAPs, 54 FR 38044, September 14, 1989), and 52 FR 25700–25701, July 8, 1987 (Final VOC MCLs). If cost-effectiveness could not be considered, EPA would be required to set each individual MCL at the limits of technology that could be afforded. This does not necessarily maximize the overall health benefits to the drinking water supply as a whole. The limited resources which are "affordable" would achieve greater health benefits for people served by the drinking water supply as a whole if these resources are deployed where they can achieve the greatest health benefits in the aggregate. Indeed, in prior SDWA rules, EPA has in fact taken cost-effectiveness into account in setting MCLs for certain volatile organic chemicals, albeit without extensive discussion, 52 FR 25699 (July 8, 1987), since failure to do so would lead to absurd results.

In sum, EPA has concluded that limited consideration of cost-effectiveness in setting MCLs will further the overall goal that Congress set in the SDWA, which was to maximize the health and safety of the country's drinking water supply as a whole. Setting each individual MCL at the limits of economic affordability would, in EPA's judgment, actually impede that goal by misallocating limited resources to achieving comparatively small or nonexistent health benefits based on the order in which EPA sets MCLs, rather than where the greatest health benefits can be achieved. Therefore, EPA believes it has an obligation to maximize the overall health benefits that accrue from all its actions affecting the nation's drinking water supply. For all of these reasons, EPA believes that it is consistent with the language, legislative history, and Congress's overall purposes to interpret the SDWA to allow EPA to consider cost-effectiveness in setting the level of control which is considered feasible using the best technology.

*Radionuclides MCLs*

In selecting MCLs for the four radionuclides that have the greatest frequencies of occurrence in public water supplies (radon, radium 226 and 228, and uranium), the Agency considered the factors described above. The Agency was able to collectively analyze these contaminants because they have the unique characteristic that all radionuclides cause cancer by the same mechanism, i.e., delivering ionizing radiation to tissue (by either external exposure, or internally when ingested or inhaled). These individual contaminants may be viewed as vehicles for internal delivery of that ionizing radiation to different parts of the body. Indeed, the Agency has classified ionizing radiation (as well as the individual contaminants proposed for regulation here), as a class A carcinogen. This classification applies to alpha, beta and photon, and gamma ray emitters. It is therefore possible to make comparisons of either the radioactivity in water or removed from water (in pCi or uCi), or the radiation dose delivered by each of the radionuclides in terms of "rems ede". Rems ede are a way of normalizing for different radionuclides the radiation dose to the body taking into account the effect of different types of ionizing radiation on tissue as well as the distribution of dose (largely determined by metabolic destination of the radionuclides) in the body of the ingested or inhaled radionuclide. These measures permit comparison of the overall reduction in either total radioactivity or the effective dose of ionizing radiation that can be achieved with different control level options.

These common characteristics of the radionuclides allow comparisons among radon, radium 226 and 228, and uranium in terms of overall reduction in ionizing radiation in drinking water and radiation dose delivered via drinking water by implementing different control levels, and the relative cost of such reductions. These comparisons were considered in evaluating alternative MCLs.

EPA is interested in soliciting public comment on the applicability of cost-effectiveness to other drinking water contaminants.

*Radon*

Radon is estimated to cause about 8,000 to 40,000 (EPA, 1989g) lung cancer deaths annually. Typical indoor radon levels (1–2 pCi/l) pose estimated lifetime lung cancer risks near 1 in 100. The most significant contributor to indoor radon is soil gas. However, volatilization of radon from drinking water during household use also increases indoor radon levels thereby contributing to increased risk of lung cancer. Direct ingestion of radon may also pose some risk of stomach and other cancers (EPA, 1991c).

EPA estimates that more than 26,000 public water systems have radon in water at levels exceeding an approximate $10^{-4}$ individual lifetime risk level. Because radon is significantly more prevalent in drinking water than radium 226 and radium 228 or uranium,

practical results is that EPA is adjured to set standards based on practical results obtainable in the field, rather than solely in the laboratory.

radon poses the greatest risk on a nation wide basis of any of the radionuclides found to occur in drinking water (EPA, 1991i). Accordingly, the Agency first determined the appropriate MCL for radon.

In determining what radon MCL to propose, the Agency evaluated the availability and performance of the various technologies capable of removing radon. Based on this evaluation, the Agency determined that only aeration fulfills the requirements of the SDWA as best available technology for radon removal as discussed in Section V.B.2. Based on treatability, radon could theoretically be reduced to 100 pCi/l or lower in most water supply systems.

The Agency also considered whether the ability of laboratories to measure reliably for radon in water imposes any limits on where the Agency can set the MCL. The Agency determined that the radon PQL could be established at 300 pCi/l (although other researchers variously believe the number could be either lower or higher; see Sections V.C and V.D below).

The Agency then analyzed the costs of implementing a 300 pCi/l standard. The Agency estimated that costs for large systems to achieve 300 pCi/l would be very low ($4 per household per year). The costs for small systems, while greater ($170 per household per year in systems serving 25 to 100 persons), were found to be affordable by the Agency. Because of the large number of water systems that would need to install treatment to reach the 300 pCi/l standard, the annual nationwide costs would be approximately $180 million. While this is a significant cost, the Agency concluded that these costs are reasonable in view of the substantial reduction in exposure to ionizing radiation and the resulting risk reduction that would be achieved. At this level, EPA estimated that up to 8300 uCi, representing approximately 200,000 person-rems ede would be removed from drinking water each year (EPA, 1991i).

Finally, the Agency estimated the health risks at the 300 pCi/l level to be a lifetime risk of approximately $10^{-4}$ (i.e., $2\times10^{-4}$). The Agency concluded that this level would be adequately protective of public health since it is within the target risk range of approximately $10^{-4}$ to $10^{-6}$.

Taking these factors into account, the Agency is proposing to set the MCL for radon at 300 pCi/l.

*Radium and Uranium*

Radium 226 and 228 and uranium are also naturally occurring contaminants. Although they are less prevalent than radon, they are present in a significant number of water systems. The total person-rems ede and associated population risk attributable to these contaminants collectively are much lower than for radon alone, although in some communities individual risks from these contaminants exceed the target risk range. The Agency identified several technologies that are highly efficient in removing radium 226 and 228 and uranium from water. Based on this evaluation, radium 226 and 228 could each be theoretically treated to a level lower than 2 pCi/l; uranium could be theoretically treated to a level lower than 5 pCi/l (see section V.B below). The Agency also established PQLs for these three radionuclides at 5 pCi/l for each (see sections V.C and V.D below). EPA's analysis indicated that it is technologically feasible to achieve control levels of 5 pCi/l for radium 226 and 228, and uranium.

The Agency then analyzed a number of cost factors. The cost of reducing radioactivity and rems ede of delivered dose by removing radium and uranium to the technically feasible level is much greater than the cost of reducing radioactivity and rems ede by removing radon (EPA, 1991i). First, the cost of the treatments for radium and uranium on a household basis, would be approximately $20 to $60/year for large systems and $700 to $800 per year for the smallest systems. These costs are far greater than for treatment of radon which would be approximately $4 per house per year for large systems and up to $170 per house per year for the smallest systems. The total number of both uCi and rems ede that would be removed by controlling radon at 300 pCi/l is much greater than the number that would be removed by controlling radium and uranium at the technically feasible levels. At the 300 pCi/l proposed standard for radon, nearly 8300 uCi annually, representing approximately 200,000 person-rems ede per year would be removed from drinking water. The total annual costs for removing this radiation by treating radon is about $180 million. In contrast, at the technically feasible levels, 150 uCi, representing 86,000 rems ede of radium and uranium would be removed annually, at a cost of nearly $400 million. The cost of removing radiation by controlling radium and uranium is approximately 200 fold greater per uCi removed and 5 fold per rem removed greater than that for radon treatment.

The Agency concludes that the cost of reducing radioactivity and rems ede of delivered dose by removing these three contaminants to the technically feasible level is disproportionate to the cost of reducing radioactivity and rems ede by removing radon. The Agency does not believe it would be reasonable to select MCLs that would impose such disproportionate costs.

Since it is not cost-effective to set the MCLs for radium and uranium at the technically feasible levels, EPA examined alternatives at the $10^{-4}$ lifetime individual risk level, which are approximately 20 pCi/l for radium 226, 20 pCi/l for radium 228 and 20 $\mu$g/1 for uranium. These levels are less costly but still assure that persons served by public water systems will not be exposed to a greater than approximately $1\times10^{-4}$ risk. In addition, the uranium value is protective against kidney toxicity, which may occur at levels far below the $10^{-4}$ lifetime risk level for uranium. For drinking water contaminants, EPA has set a reference risk range for carcinogens (after regulation) at $10^{-4}$ to $10^{-6}$ excess individual risk from lifetime exposure and therefore considers an approximately $10^{-4}$ risk protective of public health. Based on these considerations, EPA proposes to set the MCL for radium 226 at 20 pCi/l, for radium 228 at 20 pCi/l, and uranium at 20 $\mu$g/1.

Following is a detailed discussion of the factors considered in developing this proposal.

A. BATs and Associated Costs

Section 1412(b)(6) of the Act states that each national primary drinking water regulation which establishes an MCL shall list the technology, treatment techniques, and other means which the Administrator finds to be feasible for purposes of meeting the MCL. In order to fulfill the requirements of section 1412(b)(6), the EPA has identified best available technologies (BAT) for each radionuclide covered in this proposal.

Technologies are judged to be BAT based upon the following factors: High removal efficiency, general geographic applicability, cost, reasonable service life, compatibility with other water treatment processes, and the ability to bring all of the water in a system into compliance.

Table 5 summarizes the BATs identified by EPA for the removal of the subject drinking water contaminants, and their respective removal capabilities.

Table 6 shows theoretical technology limits of BATs. The achievable effluent concentrations are based upon maximum removal of influent levels

from the NIRS survey data and maximum demonstrated BAT removal rates. PWSs applying these BATs will not need to design treatment systems to achieve these estimated low effluent concentrations.

TABLE 5. BAT CONTAMINANT REMOVAL RATES [1]

| Contaminant | Ion exchange | Lime softening | Aeration | Reverse osmosis | Coagulation/ filtration |
|---|---|---|---|---|---|
| Radon | | | Up to 99.9% | | |
| Radium (226 and 228) | 80-97% | 75-95% | | 87-98% | |
| Uranium | 65-99% | 85-99% | | 98-99.4% | 80-95% |
| Beta Emitters | | | | | |
| —Cs-137 | 95-99% | | | 90-99% | |
| —I-131 | | | | 90-99% | |
| —Sr-89 | 95-99% | | | 90-99% | |
| —Mixed commercially produced radionuclides | [2] 90-99% | | | 96-99% | |

[1] Information regarding removal efficiencies, test conditions and other factors are contained in the EPA Technology and Cost documents (T&C) and cost supplements to each T&C, i.e., for uranium, radium, radon and manmade radionuclides (EPA, 1984b; 1985b; 1986b; 1986c; 1987b; 1987c; 1987d; 1988e).
[2] Mixed bed or two bed (anionic/cationic) exchange resins. Removal rate does not include I-131.

TABLE 6.—TECHNOLOGY LIMITS FOR RADIONUCLIDE REMOVAL

| Contaminant/ Technology (BAT) | Greatest percent removal | Maximum [1] Influent (pCi/l) | Achievable effluent (pCi/l) |
|---|---|---|---|
| *Radon* | | | |
| Aeration | 99.9 | 26,000 | 26 |
| *Radium-226* | | | |
| IE | 97 | 15 | 0.45 |
| LS | 95 | 15 | 0.75 |
| RO | 98 | 15 | 0.30 |
| *Radium-228* | | | |
| IE | 97 | 12 | 0.36 |
| LS | 95 | 12 | 0.60 |
| RO | 98 | 12 | 0.24 |
| *Uranium* | | | |
| IE | 99 | 88 | 0.9 |
| LS | 99 | 88 | 0.9 |
| RO | 99 | 88 | 0.9 |
| CF | 95 | 88 | 4.4 |
| *Beta Emitters* | | | |
| Two bed ion exchange | 99 | * | * |
| RO | 99 | * | * |

[1] Maximum levels in groundwater sources of drinking water as reported in NRS.
Note: IE (ion exchange); LS (lime softening); RO (reverse osmosis); CF (coagulation/filtration).
Source: (EPA, 1984b; 1985b; 1986b; 1986c; 1987b 1987c; 1987d; 1988e).

The total costs for the removal of specific radionuclide contaminants, using the proposed BATs, are summarized in Table 7. Tables 8 and 9 display the total capital cost and annual operation and maintenance costs, respectively. Costs cited in Tables 7, 8 and 9 are based on treatment conditions that would require removal of fairly high levels of contamination. The assumed removal rates are as follows: 50 percent for radium; 80 percent for radon; and 60 percent for uranium. The general assumptions used to develop the treatment costs include: chemical costs, capital costs amortized over 20 years at a 10 percent interest rate, current engineering fees, contractor overhead and profit, late 1986 power and fuel costs and labor rates (EPA, 1984b; 1985b; 1986b; 1986c; 1987b; 1987c; 1987d; 1988e). Costs as evaluated here assume the existence of no residential POE water treatment such as water softening for aesthetic reasons which might incidentally reduce some pollutant levels. The prevalence of such home treatments is extremely difficult to estimate and incorporate into a national level analysis.

EPA is presently conducting a study of treatment for very small water systems. All of the small system treatments for radionuclides, and also other contaminants, are included, and verifying treatment costs is one element of this study. EPA will make this study available to the public when it is completed. EPA solicits public comment and data on treatments that may be especially well suited to small systems and any treatment systems designed for small systems, including data on treatment efficiencies, adaptability of designs to different size systems, and cost to install and operate treatment systems designed for small public water suppliers.

Costs may vary significantly from those shown, depending on local circumstances. Costs of treatment will be less than shown on Table 8 if contaminant concentration levels encountered in the raw water are lower than those used for the calculations. However, costs of treatment will be higher if additional treatment or storage requirements need to be satisfied. The costs in Tables 7, 8 and 9 do not include those attributable to the treatment and disposal of wastes generated by water treatment plants. Waste disposal techniques and associated costs are discussed in section C, following a discussion of BATs.

TABLE 7.—TOTAL PRODUCTION COST OF CONTAMINANT REMOVAL BY BAT [1] NOT INCLUDING WASTE BY-PRODUCT DISPOSAL COST (DOLLARS/1,000 GALLONS, LATE 1986 DOLLARS)

| | Population served | | | | | |
|---|---|---|---|---|---|---|
| | 25-100 | 100-500 | 500-1,000 | 1,000-3,300 | 3,300-10,000 | >1,000,000 |
| Radium (50% removal): | | | | | | |
| Ion exchange | 2.60 | 1.50 | 0.90 | 0.58 | 0.33 | 0.17 |
| Lime softening, new | 6.40 | 3.00 | 1.30 | 0.67 | 0.54 | 0.16 |
| Lime softening, modified | 3.50 | 1.70 | 0.78 | 0.89 | 0.11 | 0.01 |
| Reverse osmosis | 5.10 | 4.00 | 2.70 | 2.30 | 1.30 | 0.72 |
| Radon (80% removal): | | | | | | |
| Packed tower aeration | 0.94 | 0.50 | 0.26 | 0.15 | 0.07 | 0.05 |
| Uranium (60 removal): | | | | | | |
| Coagulation/filtration, modified | 4.40 | 2.10 | 0.83 | 0.38 | 0.10 | 0.02 |
| Ion exchange | 4.10 | 2.70 | 2.00 | 1.70 | 1.10 | 1.00 |

TABLE 7.—TOTAL PRODUCTION COST OF CONTAMINANT REMOVAL BY BAT [1] NOT INCLUDING WASTE BY-PRODUCT DISPOSAL COST (DOLLARS/1,000 GALLONS, LATE 1986 DOLLARS)—Continued

| | Population served | | | | | |
|---|---|---|---|---|---|---|
| | 25–100 | 100–500 | 500–1,000 | 1,000–3,300 | 3,300–10,000 | >1,000,000 |
| Lime softening, modified | 4.20 | 2.10 | 0.93 | 0.47 | 0.20 | 0.03 |
| Reverse osmosis | 6.20 | 4.70 | 3.50 | 2.70 | 1.50 | 0.89 |

Notes:
[1] Technologies and cost documents, and cost supplements for radium, radon, and uranium (EPA, 1984b; 1985b; 1986b; 1986c; 1987b; 1987c; 1987d; 1988e), form the basis for costs. Costs were revised in May, 1990 to account for new system level treatment design flows adopted by EPA (EPA, 1990d).

TABLE 8.—CAPITAL COST OF CONTAMINANT REMOVAL BY BAT [1]

(Kilo Dollars, Late 1986 Dollars)

| | Population served | | | | | >1,000,000 |
|---|---|---|---|---|---|---|
| | 25–100 | 100–500 | 500–1,000 | 1,000–3,300 | 3,300–10,000 | |
| Radium (50% removal): | | | | | | |
| Ion exchange | 36 | 91 | 180 | 280 | 350 | 31,000 |
| Lime softening, new | 79 | 130 | 180 | 240 | 540 | 55,000 |
| Lime softening, modified | 33 | 74 | 140 | 200 | 150 | 400 |
| Reverse osmosis | 51 | 160 | 340 | 820 | 1,000 | 177,000 |
| Radon (80% removal): | | | | | | |
| Packed tower aeration | 15 | 33 | 58 | 78 | 100 | 13,000 |
| Uranium (60% removal): | | | | | | |
| Coagulation/filtration, modified | 27 | 55 | 96 | 130 | 100 | 480 |
| Ion exchange | 41 | 100 | 200 | 310 | 330 | 31,000 |
| Lime softening, modified | 43 | 91 | 160 | 220 | 300 | 480 |
| Reverse osmosis | 64 | 200 | 500 | 960 | 1,400 | 249,000 |

Notes:
[1] Technologies and cost documents, and cost supplements for radium, radon, and uranium (EPA, 1984b; 1985b; 1986b; 1986c; 1987b; 1987c; 1987d; 1988e), form the basis for costs. Costs were revised in May, 1990 to account for new system level treatment design flows adopted by EPA (EPA, 1990d).

TABLE 9.—OPERATION AND MAINTENANCE COST OF CONTAMINANT REMOVAL BY BAT (K$/YEAR, LATE 1986 DOLLARS)

| | Population served | | | | | |
|---|---|---|---|---|---|---|
| | 25–100 | 100–500 | 500–1,000 | 1,000–3,300 | 3,300–10,000 | >1,000,000 |
| Radium (50% removal): | | | | | | |
| Ion exchange | 1.1 | 2.8 | 7.5 | 17 | 43 | 13,000 |
| Lime softening, new | 3.8 | 11 | 20 | 28 | 73 | 9,700 |
| Lime softening, modified | 3.2 | 6.4 | 8.2 | 9.5 | 9.1 | 1,100 |
| Reverse osmosis | 4.5 | 16 | 45 | 100 | 200 | 50,000 |
| Radon (80% removal): | | | | | | |
| Packed tower aeration | 0.2 | 0.6 | 1.4 | 3.1 | 7.6 | 3,400 |
| Uranium (60% removal): | | | | | | |
| Coagulation/filtration, modified | 5.7 | 12 | 15 | 16 | 14 | 1,400 |
| Ion exchange | 3.4 | 12 | 39 | 110 | 250 | 95,000 |
| Lime softening, modified | 3.5 | 7.4 | 10 | 13 | 16 | 3,200 |
| Reverse osmosis | 5.1 | 18 | 52 | 120 | 230 | 59,000 |

Notes:
[1] Technologies and cost documents, and cost supplements for radium, radon, and uranium (EPA, 1984b; 1985b; 1986b; 1986c; 1987b; 1987c; 1987d; 1988e), form the basis for costs. Costs were revised in May, 1990 to account for new system level treatment design flows adopted by EPA (EPA, 1990d).

B. Best Available Technologies (BATs)

1. *Radium-226 and radium-228.* The Agency proposes that of the technologies capable of removing radium from source water, lime softening, ion exchange and reverse osmosis fulfill the SDWA requirements as BAT for radium removal. While radium-226 and radium-228 are radiologically different, they are chemically the same. Therefore, the same BATs, with the same removal efficiencies, apply to both. All of these technologies have demonstrated high radium removal efficiencies and have been determined to be of low cost for large public water systems. All of these technologies are currently available and have been installed in public water supplies and are compatible with other water treatment processes currently in use. The full range of technical capability and unit costs for each of the proposed BATs for radium removal is summarized in the EPA publication, "Technologies and Costs for the Removal of Radium from Potable Water Supplies" (EPA, 1984b), and the supplementary cost document for radium (EPA, 1987d). Treatments applicable to smaller systems have also been identified (EPA, 1988g; 1988h).

a. *Lime softening.* Lime softening is capable of achieving removal efficiencies for radium of 75 to 95 percent. At optimum pH levels (between 10 and 10.6) removal efficiencies of 94 to 95 percent can be achieved. Lime softening can also be used to reduce TDS, turbidity and heavy metals as well as radium and total hardness. The

estimated cost for an existing lime softening system to be modified to remove radium ranges from $3.50/1,000 gallons treated for systems serving from 25–100 persons to $.01/1,000 gallons treated for systems serving more than 1,000,000 persons. However, if a new lime softening plant was built to remove radium its cost would range from $6.40/1,000 gallons to $0.16/1,000 gallons for the same system sizes.

For a utility planning to use or currently using lime softening technology to remove radium, waste disposal concerns deserve ample consideration. Radium-226 and radium-228 concentrations in lime softening sludge have been reported by Snoeyink et al. (EPA, 1985d) to range from about 1 to 22 pCi Ra-226/g and from 2 to 12 pCi Ra-228/g dry solids. Extended sludge drying in an impoundment may increase the dry solids content to 70 percent or greater, with a corresponding increase in sludge contaminant concentration. Backwash waters may contain radium concentrations of 6 to 50 pCi/1. (EPA, 1985d).

b. *Ion exchange.* Cation exchange systems are capable of removing from 80 to 97 percent of radium from drinking water. Estimated costs range from $2.60/1,000 gallons treated for systems serving 25–100 persons, to $0.17/1,000 gallons treated for systems serving over 1,000,000 persons for removal of radium from ground water. Ion exchange softening systems are adaptable for both large and small systems, and are acceptable as either a new installation or an add on to an existing facility. Sodium cation exchange resins and ion exchange equipment are readily available commercially. Finished ("softened") waters may be corrosive to distribution system materials. However, a bypass of some unsoftened water, blended with the finished water, may provide adequately protective levels of calcium carbonate, reducing the finished water corrosivity. Disposal of concentrated waste brines containing relatively high TDS and radioactivity should be given full consideration before implementing this technology.

c. *Reverse osmosis.* Reverse osmosis (RO) membranes are capable of removing between 87 to 98 percent of the radium present in source water. RO has been primarily used for removing total dissolved solids (TDS) from water in treatment of brackish and sea waters for desalination purposes. At pressures of 200 and 425 psi, RO is capable of 95 and 98 percent radium removal, respectively. At reduced pressures this process is adaptable to fresh water sources. The RO method can be used by both large and small systems. If operated to remove 50 percent of the influent radium, costs would range from approximately $5.10/1,000 gallons treated for systems serving 25–100 persons to $0.72/1,000 gallons treated for systems serving over 1,000,000 persons. If removal of TDS is also a goal, then using reverse osmosis is a very cost effective solution in the removal of radium from ground waters.

RO performance is adversely effected by the presence of turbidity, iron, manganese, silica or scale producing constituents in the source water. If pretreatment is not already in place to remove these constituents, the cost to install the pretreatment facilities may be an important factor. Disposal of waste brine, the reject flow representing 20 to 50 percent of the feed (source) water, and the quantity of available feed water to accommodate this technology, would require consideration by a water system in its initial evaluation of alternative technologies for radium removal.

2. *Radon.* The Agency proposes that, of the technologies capable of removing radon from source water, only aeration fulfills the requirements of the SDWA as BAT for radon removal. Aeration has demonstrated radon removal efficiencies in excess of 99.9 percent. This technology is currently available, has been installed in public water supplies, and is compatible with other water treatment processes in different regions. The full range of technical capabilities for this proposed BAT is discussed in the EPA technologies and costs document for radon (EPA, 1987b), and summarized below.

Granular activated carbon (GAC) can also remove radon from water, and was evaluated as a potential BAT for radon. However, the long empty bed contact time required for radon removal renders it infeasible for large municipal treatment systems, and it is therefore not considered a BAT for radon.

a. *Aeration.* Aeration techniques for removal of radon from drinking water include active processes such as diffuse aeration, packed tower aeration (PTA), slat tray aeration and free fall, with or without spray aerators, and passive processes such as free-standing, open-air storage of water for reduction of radon. Radon reduction by decay (into the daughter products of radon) may also occur in storage tanks and in pipelines which distribute drinking water, reducing radon by approximately 10 to 30 percent, with 8 to 30 hour detention periods. Aeration is considered BAT for meeting the proposed radon MCL due to high removal efficiencies, its relative simplicity as a technology, relatively low cost and ease of operation, availability, and compatibility with other treatment processes. The aeration technique that a system chooses for radon reduction will depend upon source water quality (including radon and other contaminants removed or otherwise affected by aeration), institutional or manpower constraints, site-specific design factors, and local preferences.

The costs associated with the various technological options for radon reduction, such as packed tower aeration (PTA) and diffused aeration installations, have been examined (EPA, 1987b). Ninety-nine percent reduction of radon by PTA is estimated to cost from $1.20/1,000 gallons treated for very small systems which serve 25 to 100 persons, to $0.07/1,000 gallons treated for systems serving 1,000,000 persons. Eighty percent reduction of radon by PTA is estimated to range from $0.94 to $0.05 per 1,000 gallons for the same system sizes.

The following factors influence the aeration processes and therefore affect radon removal rates:

—temperature of water and ambient air
—air to water ratio
—contact time between air and water
—available area for transfer of radon from water.

PTA provides the most efficient transfer of radon from water to air, with the ability to remove greater than 99 percent of radon from water. A supply which requires a smaller reduction of radon, for example 50 percent, could opt to install PTA and treat 50 percent of its source water and subsequently blend the treated with raw water, or it may design a shorter packed tower to achieve compliance with the MCL. Other advantages of PTA include: removal of hydrogen sulfide, carbon dioxide, and VOCs, and oxidation of iron and manganese. No pilot or full-scale packed columns have yet been constructed for removal or radon at large municipal supplies. However, field tests have been performed by EPA, documented by Kinner et al. (1989; 1990), which verify the efficacy of aeration for radon removal. Since radon acts similarly to some highly volatile organic compounds, and packed columns have been shown to be the most efficient form of aeration for VOC removal, PTA is appropriate as BAT for radon.

Diffused aeration, which may remove up to 97 percent of radon in water possesses the following advantages: the potential for modifying existing basins or storage vessels for diffused aerator

installation; no packing media costs; and reduced pumping requirements. The Radon Technology and Cost document (EPA, 1987b) summarizes the case study of a full-scale diffused aeration plant in Belstone, England which was built to remove influent radon, and provided long-term removal efficiency of 97 percent. The disadvantages of diffused aeration include the requirement for increased contact time, the impracticality of large air-to-water ratios because of air pressure drops, and overall less efficient mass transfer of radon from water. The level of contact between air and water achievable in a packed tower aerator is difficult to obtain in a diffused air system. The above-referenced Belstone, England plant treated 2.5 mgd water, with 2,800 air diffusers, each designed to supply a maximum of 0.8 cubic feet per minute, and with a 24-minute retention time, achieved an air-to-water ratio of 8 to 1 for 97 percent radon reduction. In a field test of a diffused bubble aeration system, Kinner et al. (1990) report that removals of 90 to 99 percent were achieved at air-to-water ratios of 5 to 1 and 15 to 1.

Disadvantages which have been identified by Kinner et al. (1989; 1990) are the potential for bacteria fouling and iron and manganese precipitation, which may clog or otherwise impede operations at an aeration facility (PTA or diffused bubble type). These secondary effects may occur, however they would be highly dependent on source water quality conditions.

Spray aerators direct water upward, vertically, or at an angle, in such a manner that the water is broken into small droplets (by fixed nozzles on a pipe grid) which provide large surface areas for radon migration out of the water to the air. Most of the advantages cited above for diffused aeration also apply to spray aeration. Disadvantages include the need for a large operating area and operating problems during cold weather months when the temperature is below the freezing point. Costs associated with this option (for all sizes of water treatment plants) have not been developed by EPA.

EPA has evaluated other, less technology-intensive ("low-tech"), options which may be suitable for small water systems, and which may cost less than the above options to install and operate (Kinner et al., 1989; 1990). These options include: Open air storage, free fall with nozzle-type aerator, bubble aerators, and slat tray aerators. With 24 to 48 hours detention, open air storage may reduce radon levels by 30 to 50 percent; a free fall of 2 feet with simple nozzle attachment was found to reduce radon by 65 to 75 percent with 8 hrs detention time; and a two foot free fall into a tank equipped with garden hose (punctured) bubble aerators, supplied by a laboratory air pump, yielded 85 to 90 percent radon reduction with 8 to 12 hour detention time. The above-referenced study concluded that very effective radon reduction can be achieved by simple aeration technologies that may be easily applied in small communities.

EPA has developed cost estimates for the above mentioned alternative low-tech water treatment methods, suitable for small systems that may need partial radon removal to meet the drinking water MCL. Cost estimates for small systems installing 9-hour storage/detention, diffused aeration, spray aeration, slat tray aeration, and PTA are presented in an addendum to the EPA Radon Technology and Cost Document (EPA, 1988e).

b. *Secondary effects of aeration: Estimate of risks from PTA emissions of radon.* Since this notice contains a proposal to reduce radon concentrations in drinking water by setting an MCL, and the EPA is proposing aeration as BAT for meeting the MCL, the Agency undertook an evaluation of risks associated with potential air emissions of radon from water treatment facilities due to aeration of drinking water. It is logical to assume that radon, removed from drinking water and released to the atmosphere, could result in some degradation of air quality and possibly pose some incremental health risk to the general population. However, the risks due to potential human exposure to PTA emissions appear very small in comparison to the risks associated with radon in drinking water (EPA, 1988c; 1989b).

In one evaluation of risks associated with potential radon emissions from aeration of drinking water (EPA, 1988c), EPA used radon data from 20 drinking water systems in the U.S. which, according to the Nationwide Radon Survey (EPA, 1985a), contained the highest levels of radon in drinking water and affected the largest populations and/or drinking water communities. EPA estimated the potential annual emissions (in pCi radon/yr), from PTA treatment facilities, assuming 100 percent radon removal, and these were applied to appropriate dispersion models. Estimates were made for the following parameters: Air dispersion of radioactive emissions, including radon and progeny isotopes of radon decay; concentrations in the air and on the ground; amounts of radionuclides taken into the body via inhalation of air and ingestion of meat, milk, and fresh vegetables, dose rates to organs and estimates of fatal cancers to exposed persons within a 50 kilometer radius of the water treatment facilities. Estimates of individual risk and numbers of annual cancer cases were completed for each of the 20 water systems, as well as a crude estimate of U.S. risks (total national risks) based on a projection of results obtained for the 20 water systems. These estimates were based on exposure analyses on a limited number of model plants, located in urban, suburban and rural settings, which were scaled to evaluate a number of facilities. (A similar approach has been used by the Agency in assessing risks associated with dispersion of coal and oil combustion products.)

The risk assessment results for the 20 systems indicate the following: A highest maximum lifetime risk to individuals at one system of $4 \times 10^{-5}$, with a maximum incidence at the same location of 0.0060 cancer cases per year; an estimate of annual cancer cases for all 20 systems of 0.016/yr; and a crude U.S. estimate of 0.4 cancer cases/year due to air emissions at all drinking water supplies to meet a hypothetical MCL of 200 pCi/1. The results of the risk assessment for potential radon emissions from drinking water facilities are given in Table 10.

TABLE 10.—ESTIMATES OF RISKS AT 20 SITES DUE TO POTENTIAL RADON EMISSIONS FROM PTA UNITS AND CRUDE ESTIMATE OF U.S. RISK[1]

| Scenario | Concentration in water (pCi Rn/1) | Emission from PTA (Ci Rn/yr) | Maximum life, individual risk | Cancer cases/year |
|---|---|---|---|---|
| 20 Facilities: | | | | |
| 1 | 1,839 | 2.79 | $6 \times 10^{-7}$ | .0003 |

TABLE 10.—ESTIMATES OF RISKS AT 20 SITES DUE TO POTENTIAL RADON EMISSIONS FROM PTA UNITS AND CRUDE ESTIMATE OF U.S. RISK[1]—Continued

| Scenario | Concentration in water (pCi Rn/1) | Emission from PTA (Ci Rn/yr) | Maximum life, individual risk | Cancer cases/year |
|---|---|---|---|---|
| 2 | 5,003 | 6.22 | $1 \times 10^{-6}$ | .0008 |
| 3 | 2,175 | 2.85 | $6 \times 10^{-7}$ | .0004 |
| 4 | 1,890 | 20.89 | $1 \times 10^{-5}$ | .0004 |
| 5 | 1,310 | 1.81 | $9 \times 10^{-7}$ | .0000 |
| 6 | 1,329 | 91.80 | $2 \times 10^{-5}$ | .0040 |
| 7 | 4,085 | 2.26 | $5 \times 10^{-7}$ | .0001 |
| 8 | 10,640 | 1.18 | $2 \times 10^{-7}$ | .0000 |
| 9 | 3,083 | 0.55 | $1 \times 10^{-7}$ | .0000 |
| 10 | 3,270 | 9.04 | $4 \times 10^{-5}$ | .0060 |
| 11 | 2,565 | 3.54 | $1 \times 10^{-5}$ | .0023 |
| 12 | 4,092 | 1.75 | $3 \times 10^{-7}$ | .0001 |
| 13 | 16,135 | 2.23 | $4 \times 10^{-7}$ | .0001 |
| 14 | 3,882 | 0.27 | $1 \times 10^{-7}$ | .0000 |
| 15 | 1,244 | 1.03 | $5 \times 10^{-7}$ | .0001 |
| 16 | 2,437 | 1.35 | $7 \times 10^{-7}$ | .0000 |
| 17 | 996 | 8.94 | $2 \times 10^{-6}$ | .0008 |
| 18 | 7,890 | 0.87 | $4 \times 10^{-7}$ | .0000 |
| 19 | 9,195 | 1.02 | $5 \times 10^{-7}$ | .0000 |
| 20 | 7,500 | 1.04 | $5 \times 10^{-7}$ | .0000 |
| All 20 facilities | — | 161 | $4 \times 10^{-5}$ | .016 |
| All U.S. drinking water plants | <200 | 4,200 | — | .4 |
| | <500 | 2,000 | — | .2 |
| | <1,000 | 900 | — | .09 |

[1] Estimates of risk assessed using AIRDOSE-EPA, RADRISK and DARTAB air dispersion and lifetime risk computer codes (EPA, 1988c).

Numerous assumptions were applied in conducting the above analysis, including the following:

- PTA treatment applied, removing 100 percent of radon;
- typical (not site-specific) meteorology is used at the model plants, and flat terrain is assumed;
- 1980 census data were used, with people located in "population centroids" representative of census districts;
- 70-year residency at same location, and exposure to air and radon emissions persists throughout 70 yrs.;
- additive impact of exposure to emissions from more than one plant emitting radon was not accounted for.

To further investigate potential health risks due to PTA radon emissions, EPA used the MINEDOSE model developed to determine compliance of radon point sources regulated under EPA's NESHAPS standards (EPA, 1989b). In that study, worst case scenarios representing systems with radon levels ranging from 1,330 to 110,000 pCi/l were identified and their potential emissions modeled. These systems represent what may be the greatest potential among PWSs to increase risks via air emissions. Only systems with very high flow rates posed any potential for increasing ambient air radon exposure appreciably. The one modeling run that did indicate a potential problem assumed that all radon emissions came from a single point source (i.e, the entire production flow was treated through a single aeration tower). However, the community modelled relies on numerous widely dispersed wells for its total water supply, and aeration treatment could be installed at individual wells, thereby dispersing the emissions to the ambient outdoor air. This modeling also found that systems having very high radon levels, (100,000 pCi/l) but lower flow rates, did not appreciably increase ambient air radon levels and risks.

Given the uncertainties in calculating such risk estimates, EPA views the above estimates as "order of magnitude estimates." Nevertheless, it is apparent that the risks to the U.S. population, and to the individual drinking water communities, due to potentially aerated radon from source water are much smaller (in most cases 2 to 4 orders of magnitude smaller) than the risks due to radon in water if no treatment were applied.

EPA is aware that some states allow no emissions from PTA regardless of downwind risks. EPA has reviewed the few available data on removal of radon from air by carbon. Based on these data, EPA believes air phase removal of radon by GAC may not be feasible. Systems trying to meet local air emissions requirements may need to rely on GAC in the water phase.

c. *Granular activated carbon.* Pilot plant studies have shown that granular activated carbon (GAC) is capable of removing radon in drinking water at efficiencies of 90 to 99 percent (Kinner et al., 1989). The efficiency of removal is dependent upon radon concentration, the mass of carbon in the GAC column, empty bed contact time (EBCT) and contactor configuration (i.e., upflow or downflow). The pilot studies have shown radon to require a longer EBCT than other adsorbable (e.g., organic) materials. Thus, to achieve a 90 percent removal efficiency with a radon influent concentration of 10,000 pCi/l, an EBCT of approximately 70 minutes may be required. The need for such a lengthy EBCT means that GAC may not be practical for large municipal treatment systems (EPA, 1987b) and it is therefore not considered BAT.

Another disadvantage associated with the use of carbon for radon removal is the buildup of radiation inside and surrounding the GAC contactor. The radionuclides that may build up on the GAC media are the progeny of radon, specifically the radioactive isotopes of lead, polonium and bismuth. The short-lived radon progeny include Pb-214 and Bi-214. Long-lived radon progeny include Pb-210, Bi-210, and Po-210. The level of gamma radiation surrounding the GAC vessel depends on the amount of radon removed; gamma intensity drops sharply with increased distance from the GAC vessel. Due to the buildup of radon daughter products, such as lead-210, a beta particle emitter, the GAC unit can become a source of low-level radiation, and may present a disposal problem as well. Studies have shown that the radiation level is usually less than 1.0 mR/hr. at a distance of three (3) feet from the GAC tank surface (Kinner et

al., 1989). EPA's guidelines for radioactive waste disposal (EPA, 1990a) provide guidance on the disposal of GAC waste containing naturally occurring radionuclides, and appropriate occupational guidance.

The estimated cost for small GAC water treatment systems for 80 percent removal of radon ranges from $6.60/1,000 gallons of water serving 25 to 100 people to $1.40/1,000 gallons of water serving 3,000 to 10,000 persons, exclusive of the cost to dispose of spent carbon. Due to the problems identified above, i.e., of radiation build-up, waste disposal, and contact time, the Agency has judged that GAC cannot be designated as BAT for radon removal (EPA, 1987b; 1988e; 1991i).

3. *Uranium.* The Agency proposes that, of the technologies capable of removing uranium from source water, coagulation/filtration, ion exchange, lime softening and reverse osmosis fulfill the requirements of the SDWA as BAT for uranium removal. These technologies have demonstrated effective uranium removal, are currently available, have been installed in public water supplies, and are compatible with other water treatment processes in different regions. The full range of technical capabilities for each of these proposed BATs is discussed in the EPA technologies and costs document for uranium (EPA, 1985b), and summarized below.

a. *Coagulation/filtration.* Laboratory and pilot plant studies have shown that pH and coagulant dosage significantly impact uranium removal efficiency in water treatment. Iron and aluminum based coagulants are generally more effective in aiding the removal process at pH values near 6 and 1. Removal by coagulation appears to be low at pH 8 due to stability and charge characteristics of uranyl species in solution. In one study, removal efficiencies of greater than 80 percent were reported (Sorg, 1988) in tests using 20 mg/l doses of ferric sulfate, ferrous sulfate, or aluminum sulfate coagulants. Influent uranium levels were about 83 μg/l in that study. Coagulation/filtration has been demonstrated to achieve removal efficiencies as high as 95 percent when using aluminum sulfate dosed at 10 mg/l or more, at pH 10 (Sorg, 1988).

Coagulation/filtration as a new process designed specifically to remove uranium may not be cost effective, particularly for smaller utilities. However, where the reduction of turbidity in the source water is also a concern, this method can be very effective.

Estimated costs for an existing coagulation/filtration facility to modify treatment for 60% removal of uranium from ground water sources range from $4.40/1,000 gallons of water for systems serving a population of 25–100 persons, to $0.02/1,000 gallons of water for systems serving over 1,000,000 persons.

b. *Ion exchange.* Anion exchange systems for the removal of uranium and other soluble ions have demonstrated uranium removal efficiencies of between 65 and 99 percent. Ion exchange devices are available for most applications. The estimated costs for removal of uranium from ground water by ion exchange range from $4.10/1,000 gallons of water treated for systems serving 25–100 persons, to $1.00/1,000 gallons of water treated for systems serving more than 1,000,000 persons. Disposal of concentrated waste brine must also be considered, as discussed above.

c. *Lime softening.* Lime softening is capable of achieving removal efficiencies for uranium of up to 99 percent. At optimum pH levels of 10.6 to 11.5 removal efficiencies of 85 to 99 percent can be achieved. Best results can be achieved by increasing the dosage of lime to approximately 250 mg/L and maintaining the pH above 11. Lower dosages of $Ca(OH)_2$, 50 to 100 mg/l, have achieved 85 percent uranium removal. This treatment should be given serious consideration if removal of hardness from source water is also a desired objective. It may not be cost effective for a system to build a new lime softening treatment facility specifically to remove uranium. The estimated cost to modify an existing lime softening treatment facility to remove uranium from ground water ranges from $4.20/1,000 gallons of water serving 25–100 persons to $0.03/1,000 gallons of water serving more than 1,000,000 persons.

d. *Reverse osmosis.* Reverse osmosis (RO) membranes are capable of removing uranium and many other contaminants in source water, at high efficiencies. RO has been used primarily for removing total dissolved solids (TDS) from water in the treatment of brackish and sea waters for desalinization purposes. At reduced pressures RO is adaptable to fresh water sources. Using cellulose acetate membranes, at 250 psi pressure, RO has successfully achieved 98 to 99.4 percent removal efficiencies. However, RO performance is adversely affected by the presence of turbidity, iron, manganese, silica or scale producing constituents in source water. If pretreatment is not already in place to remove these constituents, the cost to install the pretreatment facility would be an important factor.

The RO system is adaptable to all size systems with costs ranging from $6.20/1,000 gallons for systems serving 25–100 persons to $0.89/1,000 gallons for systems serving over 1,000,000 persons. If reducing TDS is also a goal of the treatment process then reverse osmosis is a very cost effective solution for the removal of uranium from source waters. Disposal of waste brine, the reject flow representing 20 to 50 percent of the feed water, and the quantity of available feed (source) water to accommodate this technology, would require consideration by a water system in its initial evaluation of alternative technologies for radium removal.

4. *Beta and photon emitters.* The Agency proposes that of the technologies considered to remove beta particle emitters from drinking water, ion exchange and reverse osmosis would fulfill the requirements of the SDWA as BAT for gross beta particle removal. The subject radionuclides originate from the nuclear fuel cycle, defense related industrial activities, institutions such as hospitals, research foundations and universities, commercial/industrial users of radioisotopes, and atmospheric or surface detonation of nuclear devices. Some beta-emitting radionuclides originating from such sources have occurred in drinking water sources and have been partially removed by drinking water treatment processes.

Levels of gross beta above the maximum contaminant level are likely to occur only in transient situations following a contaminating event. The following technologies may be effective in lowering the contaminant level below the MCL value. The full range of technical capability of the proposed BATs is summarized in the EPA document "Technologies and Costs for the Removal of Man-Made Radionuclides from Potable Water Supplies" (EPA, 1986b). The technologies listed are available and compatible with other water treatments in all regions of the United States.

a. *Ion exchange.* Ion exchange has been successfully employed by the nuclear power industry in treating liquid radioactive wastes as well as chemical, laboratory, and laundry wastes containing various ionic species. Cation exchange resins have exhibited a 95 to 99 percent removal efficiency for low level and trace amounts of the following contaminants: barium-137, barium-140, cadmium-115, cesium-137, lanthanum-140, scandium-46, and strontium-89. Anion exchange resins have exhibited a

94 to 99 percent removal efficiency for the following contaminants: niobium-95, tungsten-185, zirconium-95, scandium-46, and yttrium-91. Mixed bed ion exchange may effectively remove between 90 and 99.9 percent of all contaminants listed above. Therefore ion exchange technology is proposed as BAT for beta and photon emitters. Disposal of waste brine may pose difficulty due to the high concentration of radionuclides in the brine, the availability of disposal options for the liquid wastes, and State or Federal limitations which may prevail.

The cost for removal of beta-emitting radionuclides utilizing ion exchange would be highly dependent upon type and amount of contamination. The cost supplement (EPA, 1987c) to the above cited Technologies and Cost document contains estimated cost for removal of beta emitters from public water systems using two-bed ion exchange system (i.e., cationic and anionic).

b. *Reverse osmosis.* Reverse osmosis (RO) membranes can effectively remove more than 99 percent of radioactive contaminants such as strontium, cesium, and iodine from water. Pilot studies have demonstrated removal efficiencies of 90 to above 99 percent of dissolved iodine-131, strontium-89, and cesium-134. The cost of removing man-made radionuclides from source water utilizing RO may be similar to the costs cited in Tables 7, 8 and 9 for removal of uranium from drinking water. However, cost would be highly dependent on type and degree of contamination.

RO performance is adversely affected by the presence of turbidity, iron, manganese, silica, or scale-producing constituents in the source water. If the pretreatment is not already in place to remove these constituents, the cost to install the pretreatment facilities may be an important factor. Disposal of waste brine may be problematic due to the high concentration of radionuclides in the brine, or due to local requirements or regulations affecting discharge.

The cost supplement (EPA, 1987c) for the Technology and Cost document cited above contains estimated cost for removal of beta emitting radionuclides from public water systems using reverse osmosis technology.

c. *Coagulation/filtration.* Some beta-emitting radionuclides which exist as suspended material in water may be removed by coagulation/filtration. In laboratory studies involving many soluble radionuclides, it was reported that coagulation employing aluminum sulfate, ferric chloride and/or ferrous sulfate was more effective for removal of soluble cations of valences 3, 4 or 5 which include: niobium-95, cerium-141, phosphorus-32, zirconium-95, cobalt-58 and -60, ruthenium-103, and sulfur-35.

Full-scale studies in municipal filtration plants downstream from nuclear reactor sites have indicated removal of chromium-51, scandium-46, arsenic-76 and seven other nuclides at efficiencies of 28 to 87 percent, using alum as the coagulant. Activated silica or clay can be added when needed to enhance flocculation, coagulation and precipitation. Ninety percent removal of strontium requires iron coagulant dosages greater than 500 mg/l at a pH of 11. Efficiencies of removal of specific radionuclides by the coagulation process can range from 0 to 99 percent.

Due to the variability cited above in the removal efficiencies, and because of the lack of information on removal of many beta emitting radionuclides, EPA proposes that coagulation/filtration does not meet the requirements to be proposed as a BAT for beta emitters.

d. *Lime softening.* Lime softening with soda-ash addition can remove approximately 90 percent of strontium and other radiological contaminants present in source water. To achieve this percent removal the sodium carbonate concentration should be three times the equivalent permanent calcium hardness. Using 68 to 205 mg/l of lime and 68 to 154 mg/l of soda ash, 90 percent removal of the following radionuclides may be achievable: barium-140, cadmium-115, zirconium-95, lanthanum-140, scandium-46, niobium-95, strontium-89, and yttrium-91.

Due to the lack of information on removal of many of the beta emitting radionuclides addressed by this proposed regulation, EPA proposes that lime softening not be designated as a BAT for beta emitters.

5. *Alpha emitting radionuclides.* In order to determine BAT for the removal of alpha-emitting radionuclides, the Agency required information regarding the identity and treatability of those radionuclides which occur or may occur in potable water supplies (other than radium, radon and uranium). Alpha emitters identified above that may occur in water systems include polonium-210 (Po-210), thorium 228,230, and 232 (Th-228, 230, 232) and at very low levels, plutonium 238, 239 and 240 (Pu-238, 239, 240).

EPA summarized available treatment data from field studies and from public water systems in the document "Technologies and Costs for the Removal of Alpha Emitters from Potable Water Supplies (EPA, 1991k). EPA has found no treatability information on the radionuclide thorium, a fact likely due to the insolubility of and the difficulties associated with measuring this contaminant. Relatively little information was available on treatability of plutonium in water supplies. However, plutonium appears to be removed by coagulation and filtration technology, particularly where the contaminant is associated with turbidity in surface waters or with colloidal hydroxide particulates. Surface water contaminated with trace amounts plutonium 239 and 240, such as Lake Michigan (fallout derived plutonium) and the Savannah River (downstream from a nuclear power plant), have been treated for industrial and municipal use with coagulation/filtration technology. Raw influent waters contained 1 to 2 femtocuries of plutonium per liter of water. Removals of plutonium at these facilities have been recorded in the range of 25 to 96 percent. The addition of carbonates through lime and soda ash appears to contribute to the coagulation and removal of colloidal plutonium from natural surface waters. Plutonium removal efficiency was found to increase with higher plutonium concentrations. Nonetheless, in regard to the application of coagulation/filtration for removal of plutonium from water, EPA finds that the wide range of efficiencies that have been documented preclude its designation as a BAT for alpha emitters.

EPA has undertaken to identify BATS that effectively remove polonium-210 from drinking water to achieve compliance with the gross alpha standard. The results of treatability studies conducted in Maine on well water containing high levels of polonium-210 are discussed in detail in the Cost and Technologies Document cited above. In the Maine field study conducted over 2 months during 1990–1991, anion exchange, reverse osmosis, and granular activated carbon (GAC) were tested. These tests showed (after correction of some clogging and fouling of the ion exchange and carbon units) reverse osmosis with the highest removal rates (98–99%), and GAC (69–93%) and ion exchange (52–83%) showing somewhat lower removal rates. Water pH may affect polonium removal rates for GAC and ion exchange, but this has not been documented.

The Maine treatability studies and the Technologies and Cost document form the basis for a decision by EPA to propose a BAT for removal of alpha emitters. RO has provided the highest removal efficiencies and is proposed as BAT for alpha emitter removal.

C. Waste Treatment and Disposal

The treatment and disposal of waste by-products generated by the treatment

processes increases overall water treatment costs, especially for small systems. However, in establishing BAT, EPA identifies the treatment and disposal technologies that are reasonably available for large metropolitan regional drinking water systems (i.e., systems which service 50,000 to 75,000 persons). Disposal of wastes from treatment for radionuclides does not significantly increase the total treatment costs for large systems. Several waste disposal techniques and estimates of associated costs are identified in Table 11. Technologies and costs related to the disposal of the granular activated carbon that may in some cases be used for radon removal have not been determined by EPA. GAC is not a BAT for radon removal for reasons outlined in section B, part 2(c), above.

TABLE 11.—RANGE OF BRINE AND SLUDGE DISPOSAL COSTS IN REMOVAL OF RADIONUCLIDE CONTAMINANTS [1]

[Cents/1,000 Gallons of Water Treated]

| Treatment process | Direct discharge | Discharge to sewer | Evaporation pond/land | Chemical precipitation |
|---|---|---|---|---|
| Brine Disposal: | | | | |
| Ion Exchange | (2) | 4-110 | 20-250 | 30-350 |
| Reverse osmosis | 2-95 | 10-230 | (2) | (4) |
| **Treatment process** | **Discharge to sewer** | **Non-mechanical dewatering and land disposal (3)** | **Dewatering and land disposal (5)** | |
| Sludge Disposal: | | | | |
| Coagulation/Filtration | 1-190 | 65-360 | 75-2,800 | |
| Lime Softening | (2) | 30-600 | (4) | |

Notes:
[1] From "Technologies and Costs for the Treatment and Disposal of Waste Byproducts from Water Treatments for the Removal of Inorganic and Radioactive Continants" (EPA,1986d). Cost ranges represent disposal costs for very large to very small water systems.
[2] Data not available.
[3] Non-mechanical dewatering alternatives for sludges include sand drying beds and dewatering lagoons.
[4] Disposal option too expensive.
[5] Mechanical dewatering may include utilization of pressure filtration.

Liquid wastes, or brines, are generated by ion exchange, reverse osmosis, and activated alumina. The most economical disposal method for concentrated brines is discharge to a sanitary sewer, and for reverse osmosis, direct discharge of the concentrated waste stream to a receiving body of water, if these methods are acceptable to applicable regulatory agencies and meet Clean Water Act requirements for direct and indirect discharges to surface water. Underground injection may be an option, subject to the requirements of the Underground Injection Control Program. Other possible though more expensive alternatives include evaporation pond dewatering followed by land disposal, and chemical precipitation followed by non-mechanical drying and land disposal. Sludges are generated by coagulation/filtration, greensand filtration, and lime softening. The most economical disposal method for sludges is discharge to a sanitary sewer. Again, this method may be restricted by state or local requirements and pre-treatment requirements under the Clean Water Act (see generally 40 CFR part 403). An alternative option may be non-mechanical drying (lagoons or drying beds) followed by land disposal. Mechanical methods tend to be higher in cost, though technically feasible, for all sludges.

At the present time there are no federal regulations which specifically address the disposal of water treatment wastes containing radionuclides. However, the selection of waste by-product disposal alternatives may be determined by federal, state, and local regulatory constraints and site specific conditions. Regulatory constraints may include industrial pretreatment requirements for sanitary sewer discharges (including requirements applicable to sewage sludge use and disposal under section 405 of the Clean Water Act), requirements under the Underground Injection Control (UIC) program, RCRA requirements for hazardous waste disposal and protection of groundwater, and effluent limitations and water-quality based limits for the discharge of some contaminants into local receiving waters (groundwaters and surface waters) under the NPDES program. Site-specific conditions which influence waste management include the availability of sewage disposal, location of disposal sites, climatic factors, cost of land, and other local or regional factors including available manpower and infrastructure characteristics.

EPA's report entitled "Suggested Guidelines for the Disposal of Naturally Occurring Radionuclides Generated by Drinking Water Treatment Plants," (EPA, 1990a) outlines the Agency's understanding of the technical issues and the existing regulatory framework that may be relevant to systems which remove naturally-occurring radioactive substances from drinking water supplies. In this report, EPA recommends types of treatment and disposal options and institutional controls which would be pertinent for solid and liquid wastes containing radioactive contaminants, at various ranges of concentration. The report also makes recommendations regarding radiation in the water treatment plant and protection of workers at the plant and during waste disposal operations. EPA solicits public comment on its waste disposal guidance, and waste disposal issues in general.

EPA and others have studied the treatment technologies available for the removal of radionuclides from drinking water and characterized some of the waste residuals of treatment. These studies were conducted on source waters naturally high in radioactivity and produced data which may be useful for the purpose of characterizing solid and liquid wastes from the treatment of drinking water and for comparison with the EPA Suggested Guidelines cited above. Table 12 summarizes some data that EPA has gathered on water treatment wastes containing radium and uranium.

Table 13 outlines the options for sludge disposal suggested in the EPA guidelines. Notwithstanding these suggested guidelines, solid wastes and liquid wastes generated by drinking water treatment plants should be disposed of in compliance with Federal, State and local requirements, State-adopted criteria of 40 CFR part 257, which contains RCRA groundwater protection criteria, and municipal solid waste landfill regulations under 40 CFR part 258.

Similarly, from the same EPA report cited above, EPA guidelines were developed for disposal of liquid wastes, or brines, which result from the treatment of drinking water containing radionuclides. These are outlined in Table 14. EPA solicits public comment on the waste disposal guidance and estimated disposal costs.

TABLE 12.—SUMMARY OF WATER TREATMENT DATA ON WASTES CONTAINING NATURAL RADIONUCLIDES

| Treatment wastes | References | Concentration range |
|---|---|---|
| Lime softening sludges | (EPA, 1985d) | |
| Ra-226 | | 1-22 pCi/g (dry). |
| Ra-228 | | 2-12 pCi/g (dry). |
| Ion exchange | (EPA, 1987f) | |
| Chemical clarification filter cake, uranium | | 57-171 pCi/g (dry). |
| Lime softening backwash | (EPA, 1985d) | |
| Ra-226 | | 6-50pCi/l. |
| Ion exchange brine/regen | | |
| Radium—typical | (Schliekelman, 1976) | 110-530 pCi/l. |
| —Peak | | 3,500 pCi/l. |
| Uranium | (Schliekelman, 1976 and EPA, 1985d) | up to 610 pCi/l. |
| Reverse osmosis waste | (Sorg et al., 1980) | |
| Ra-226 | | 7-38 pCi/l. |
| Mang. and iron treatment filter backwash | (EPA, 1985d and EPA , 1987a) | |
| Ra-226 | | 21-106 pCi/l. |
| Ra-228 | | 5.7-83 pCi/l. |

TABLE 13.—DISPOSAL GUIDELINES FOR RADIOACTIVE SOLID WASTES RESULTING FROM DRINKING WATER TREATMENT PROCESSES [1]

| Waste characteristics | Disposal option |
|---|---|
| I. Solids/sludges containing less than 3 pCi/g of radium or lead-210, or less than 30 pCi/g uranium. | Sludge should be dewatered, and mixed in landfill. |
| II. Solids/sludges containing 3 to 50 pCi/g of radium or lead-210, or 30 to 500 pCi/g uranium. | Sludge should be dewatered, and disposed of within a stabilized landfill to isolate and to avoid inappropriate usage of the site. |
| III. Solids/sludges containing 50 to 2,000 pCi/g of radium or lead-210, or 500 to 2,000 pCi/g of uranium. | Case-by-case determination, to include consideration of standards for uranium mill tailings (40 CFR 192), NARM disposal, and long-term institutional control of disposal sites. RCRA hazardous waste units should also be considered. NRC provisions may apply. |
| IV. Solids/sludges containing more than 2,000 pCi/g of natural radioactivity. | Should be disposed of in a low-level radioactive waste disposal facility operated under the provisions of the Atomic Energy Act, as amended, or at a State or EPA-permitted facility for NARM disposal. Uranium recovery may be possible. NRC provisions may apply. Dept. of Transportation regulations would apply. |

Note: Water treatment facilities should keep records of the amount and composition of radioactive wastes they generate, and the manner and location of disposal.

[1] From EPA Suggested Guidelines (EPA, 1990a).

TABLE 14.—DISPOSAL GUIDELINES FOR RADIOACTIVE LIQUID WASTES GENERATED BY WATER TREATMENT PLANTS [1]

| Disposal option | Requirements (Federal and other) |
|---|---|
| A. Disposal into surface water. | (1) Federal, State and local discharge limits and NPDES permit requirements apply. |
| B. Discharge into sanitary sewers (if Ra-226 is less than 400 pCi/l, Ra-228 less than 800 pCi/l, total uranium less than 1 μCi/l, and yearly total discharge less than 1 curie). | (1) State limits on discharge of hazardous or radioactive wastes. (2) Limits on discharge of radium and uranium into sanitary sewers—per NRC standards for discharge by licensees (10 CFR 20, part 303). (3) Federal, State, and local pretreatment requirements. |
| C. Disposal of radioactive wastes through injection wells (under conditions consistent with 40 CFR 144 classifications of wells). Shallow injection banned. | (1) Authorization of any injection of liquid wastes under the Underground Injection Control (UIC) program regulations in 40 CFR 144.6(a)(2), and 144.12(c). |
| D. Evaporation, precipitation, drying, or other treatment. | (1) Residual solids should be disposed per solid waste regulations and per EPA guidelines for water treatment solid wastes (EPA, 1990a). |

[1] From EPA Suggested Guidelines (EPA, 1990a).

## D. Analytic Methods

The SDWA directs EPA to set an MCL for contaminants for which there are MCLGs, "if, in the judgement of the Administrator, it is economically and

technologically feasible to ascertain the level of such contaminants in water in public water systems." (SDWA section 1401[1][C][ii]). NPDWRs are also to "contain[s] criteria and procedures to assure a supply of drinking water which dependably complies with such maximum contaminant levels; including quality control and testing procedures to insure compliance with such levels." (SDWA section 1401[1][D]). The analytic methods described and evaluated here are the testing procedures EPA identified to insure compliance with the MCLs. EPA evaluated the availability, cost, and the performance of these analytical techniques, as well as the ability of laboratories to use these methods to measure radionuclide contaminants consistently and accurately in a compliance monitoring setting.

The reliability of analytic methods at the maximum contaminant level is critical to implementing and enforcing the MCLs. Therefore, each analytical method was evaluated for accuracy or recovery (lack of bias) and precision (good reproducibility over the range of MCLs considered). The primary purpose of this evaluation is to determine:

- Whether analytical methods are available to measure the regulated radionuclide contaminants in drinking water;
- The ability of recently developed analytical method(s) to measure radionuclide contaminants in drinking water;
- Reasonable expectations of technical performance by analytical laboratories conducting routine analysis at or near the MCL levels; and
- Analytical costs.

The selection of analytical methods for compliance with these regulations includes consideration of the following factors:

(a) Reliability (i.e., precision/accuracy of the analytical results over a range of concentrations, including the MCL);

(b) Specificity in the presence of interferences;

(c) Availability of adequate equipment and trained personnel to implement a national compliance monitoring program (i.e., laboratory availability);

(d) Rapidity of analysis to permit routine use; and

(e) Cost of analysis to water supply systems.

1. *Description of analytic methods.* Analytical methods exist to measure each radionuclide contaminant covered by today's proposed regulations. Table 15 lists these analytical methods. EPA believes these methods are technically sound, economical, and generally available for radionuclide monitoring, and is proposing their use for monitoring to determine compliance with the MCLs.

TABLE 15.—PROPOSED METHODOLOGY FOR RADIONUCLIDE CONTAMINANTS

| Contaminant | Methodology | References (Method or Page Number) | | | | | | | | |
|---|---|---|---|---|---|---|---|---|---|---|
| | | EPA [1] | EPA [2] | EPA [3] | EPA [4] | SM [5] | ASTM [6] | USGS [7] | DOE [8] | Other |
| *Naturally Occurring:* | | | | | | | | | | |
| Gross alpha and beta | Evaporation | 900.0 | pp. 1-3 | 00-01 | p1 | 7110 B | D 1943-81 | R-1120-76 | | |
| Gross alpha | Co-precipitation | | | 00-02 | | | | | | |
| Radium 226 | Radon Emanation | 903.1 | pp. 16-23 | Ra-03 | p. 19 | 750-Ra B | D 3454-86 | R-1141-76 | | [9] N.Y. |
| | Radiochemical | 903.0 | | Ra-05 | | | | | | |
| Radium 228 | Radiochemical | 904.0 | pp. 24-28 | Ra-05 | p. 19 | 7500-Ra D* | | R-1142-76 | | [9] N.Y., [10] N.J. |
| Radon 222 | Liquid Scintillation | | | | | | | | | [11] 913, [12] LS |
| | Lucas Cell | | | | | | | | | [12] LC |
| Uranium | Radiochemical | 908.0 | | | | 7500-U B | D 3972-82 | | | |
| | Fluorometric | 908.1 | | | | 7500-U C | D 2907-83 | R-1180-76 | E-U-03 | |
| | Alpha Spectrometry | | | 00-07 | p. 33 | | | R-1182-76 | E-U-04 | |
| *Man-Made:* | | | | | | | | | | |
| Radioactive Cesium | Precipitation | 901.0 | pp. 4-5 | | | 7500-Cs B | | R-1110-76 | E-Cs-01 | |
| Radioactive Iodine | Precipitation | 902.0 | | | I-01 | 7500-I B | D 2334-88 | | | |
| Radioactive Strontium 89, 90. | Precipitation | 905.0 | pp. 29-33 | | p. 65 | 7500-Sr B | | R-1160-76 | | |
| | Radiochemical | | pp. 108-114 | Sr-04 | | | | | E-Sr-01 | |
| Tritium | Liquid Scintillation | 906.0 | pp. 34-40 | H-02 | p. 87 | 7500-3H B | D 2476-81 (87) | R-1171-76 | | |
| Gamma and photon emitters. | Gamma Ray Spectrometry. | 901.1 | | | | | D-3649-85 | | 4.5.2.3 | |

[1] "Prescribed Procedures for Measurement of Radioactivity in Drinking Water," EPA Environmental Monitoring and Support Laboratory, Cincinnati, OH (EPA-600/4-80-032, August 1980. (EPA, 1980)
[2] "Interim Radiochemical Methodology for Drinking Water," EPA-600/4-75-008, March 1976. (EPA 1976)
[3] Eastern Environmental Radiation Facility, Montgomery, AL 36109, "Radiochemical Procedures Manual," EPA 520/5-84-006, August 1984. (EPA, 1984a)
[4] "Radiochemical Analytical Procedures for Analysis of Environmental Samples," EMSL-LV-0539-17, March 1979. (EPA, 1979b)
[5] "Standard Methods for the Examination of Water and Wastewater," 17th edition, American Public Health Association, American Water Works Association, Water Pollution Control Federation, 1989. (APHA, 1989)
[6] 1989 Annual Book of ASTM Standards, Vol. 11.02, American Society for Testing and Materials, 1916 Race Street, Philadelphia, Pa. 19103. (ASTM, 1989)
[7] Methods for Determination of Radioactive Substances in Water and Fluvial Sediments," Book 5, 1989, Techniques of Water-Resources Investigations of the United States Geological Survey, Chapter A5. (USGS, 1989)
[8] Environmental Measurements Laboratory, U.S. Department of Energy, "EML PROCEDURES MANUAL, 27th edition." (DOE, 1990)
[9] "Determination of $^{226}$Ra and $^{228}$Ra (Ra-02), Radiological Sciences Institute Center for Research—New York State Department of Health, January 1980 (Revised June 1982). (NY State DOH, 1982)
[10] "Determination of Radium 228 in Drinking Water," State of New Jersey—Department of Environmental Protection—Division of Environmental Quality—Bureau of Radiation and Inorganic Analytical Services, August 1990. (NJ DEQ, 1990)
[11] Method 913—Radon in drinking water by liquid scintillation, Environmental Monitoring and Support Laboratory, Las Vegas, NV. (EPA, 1991q)
[12] Appendix D, Analytical Test Procedure, "The Determination of Radon in Drinking Water," p. 22, Two Test Procedures for Radon in Drinking Water, Interlaboratory Collaborative Study, EPA/600/2-87/082, March 1987. (EPA, 1987e)

EPA believes that the analytical methods listed in Table 15 are technically and economically available for radionuclide monitoring. Many of the listed analytical methods have been used for a number of years in water analyses under the Interim Drinking Water Regulations (see 40 CFR part 141, subpart C) and in determining

compliance with the current MCLs (see 40 CFR part 141, subpart B). EPA has updated the original references to the most recent editions of the manuals and references, when applicable, i.e., EPA, Standard Methods (SM), American Society for Testing Materials (ASTM), United States Geological Survey (USGS) and Department of Energy (DOE). Several more recently developed methods are also listed. In addition, EPA Method 909, "Determination of Lead-210 in Drinking Water" would be used for the unregulated contaminant monitoring for lead-210 (EPA, 1982).

The reliability of these methods has been demonstrated by a history of many years' use by state, federal and private laboratories. Most of the methods above have undergone an interlaboratory collaborative study (multilaboratory tested), with the remainder being subjected to single laboratory tests. The majority of the validation studies were EPA performed or sponsored. Those validations performed by accredited standard bodies, i.e., SM, ASTM, etc. were reviewed by EPA personnel and determined to be acceptable. The N.Y. method for radium 226 and 228 had "limited approval", previous to the discontinuation of alternate test procedures (ATPS) in the drinking water program. The N.J. method for radium 228 is currently under review. EPA requests comments on whether these techniques should be considered available for purposes of this proposed rule.

Below is a brief description of the proposed radionuclide techniques listed in Table 15. Analysis generally requires some sample preparation followed by counting by one of several methods. Radiation counting instruments include various types of gas-flow proportional counters, scintillation cells and scintillation counters that are suitable for measuring alpha- or beta-emitting radionuclides, and sodium iodide or germanium detectors coupled to multichannel analyzers are available for gamma spectrometry. General description of the different basic counting methods are presented, followed by brief discussions of the methods specific for each analyte. Copies of the complete methods are available in the Drinking Water Docket, as well as in several published reference manuals. EPA refers readers to the references for information on precision, accuracy, counting efficiency, background determination, sample and source preparations, interferences and calibration information on the proposed analytical methods.

a. *Counting methods.* i. Alpha Emitting Radionuclides (Gross alpha particle activity, Radium-226, Radon-222 and Uranium)—Alpha Counting Methods—Alpha particles are characterized by an intense loss of energy in passing through matter. This intense loss of energy is used in differentiating alpha radioactivity from other types by the dense ionization or intense scintillation it produces. Alpha counting methods, which measure alpha radioactivity, are applicable in the determination of gross alpha particle activity, radium-226, radon-222 and uranium. Alpha radioactivity can be measured, after various sample preparations, by one of several types of detectors in combination with appropriate electronic components. The techniques for measuring the alpha emitters use gas-flow proportional counters, scintillation cell systems and liquid scintillation counters, in conjunction with electronic components such as high voltage power supplies, preamplifiers, amplifiers, scalers and recording devices. Additional techniques using fluorometry and alphaspectrophotometric techniques are being proposed for uranium analysis.

Proportional Counting. In proportional counting, alpha particles are introduced to the sensitive region of a proportional counter and produce ionization of the counting gas. The electrons are accelerated towards the anode, producing secondary ionization and developing a large voltage pulse by gas amplification. The total ionization is proportional to the primary ionization produced by the alpha particle. Electronic voltage discrimination allows for differentiation of alpha particles from beta particles.

Scintillation Counting. In scintillation counting, the alpha particle transfers energy to a scintillator disk, such as zinc sulfide, which is enclosed within a light-tight container. The transfer of energy to the scintillator disk results in the production of light at a wavelength characteristic to the scintillator, and with an intensity proportional to the energy transmitted from the alpha particle. The scintillator disk is placed next to the sample and on the face of the photomultiplier tube. The light from the scintillator strikes the photocathode producing electrons, which are emitted at levels proportional to the intensity of the light. The photoelectrons are amplified by the multiplier phototube and a voltage pulse is produced at the anode for measurement. An electronic scaler (counter) records the individual pulses which are proportional to the number of alpha particles striking the scintillation detector.

A scintillation cell system for radon gas counting performs alpha particle counting using the principles of scintillation counting as described above. The exceptions are that a scintillation flask ("Lucas Cell", a 100–125 ml metal cup coated on the inside with zinc sulfide and having a transparent window) replaces the scintillation disk in the apparatus. A counting system compatible with the scintillation flask is incorporated. The scintillation cell system is used for the specific measurement of radon. Radium-226 can also be measured by Lucas Cell counting of its radon-222 progeny.

Direct, low volume liquid scintillation (liquid scintillation) counting of alpha emitters with a commercially available instrument is also employed in the proposed methods. A liquid scintillator or organic phosphor is combined in an appropriate mineral oil or other organic base scintillator "cocktail" with the water sample. Mixing achieves a uniform dispersion before counting. This replaces the planchet or disk preparation that occurs before the counting step in the scintillation technique.

Analyses performed using a fluorometer require sample preparation as mentioned above. Fluorometry is used in one of the procedures for uranium in this proposal. The fluorometer measures the fluorescence of the uranium from the sample that is exposed to ultra violet light from the instrument. The response to this excitation is proportional to the concentration of the analyte in the sample.

Alpha spectroscopy involves identifying specific alpha isotopes by converting the kinetic energy of an alpha particle to a charge pulse whose magnitude is proportional to the alpha particle energy absorbed by the detector. The pulse is routed to a multichannel analyzer where energy discrimination can be performed. This alpha spectrometer is employed in some of the techniques for the measurement of uranium.

ii. Beta Emitting Radionuclides (Gross beta particle activity, Radium-228, Cesium-134 and –137, Iodine-131, Strontium-89 and –90 and Tritium)-Beta Counting Methods: The large difference in the specific ionization energy produced by alpha and beta particles permits pulse discrimination between these radiations to allow for identification. Beta particles are characterized as fast electrons emitted by radioactive nuclei. The beta particles from a particular radioactive element are not all emitted with the same energy

but with energies ranging from zero up to a maximum value which is characteristic of the nuclide. This fact makes it extremely difficult to differentiate among beta emitters by energy discrimination.

Beta counting methods, which measure beta radioactivity, use one of several types of instruments (counters) that consist of a detector and an amplifier, power supply, and scaler, etc. As in alpha counting, there are various sample preparations or chemical separations necessary prior to counting. The most widely used instruments are proportional counters, but scintillation systems are also used. These counting techniques are applicable for the measurement of beta radioactivity by using beta emitting standards for calibration and determination of counting efficiency in the analyses.

iii. Gamma and Photon Emitting Radionuclides-Gamma Counting Method: Gamma rays are high energy photons with discrete energies that are a penetrating form of radiation. This characteristic can be used to measure samples of any form, as long as calibration standards of the same form are available and are counted using the same geometry. Individual calibration standards are used for identifying and quantifying contributing gamma emitting radionuclides using gamma counting or gamma spectrometry. Gamma counting is performed using solid detectors (NaI or germanium), as opposed to gas-filled detectors.

In gamma-ray analysis or counting, the detectors produce light photons (scintillations) or electron-hole pairs that are amplified into electrical pulses within the counting system. These output pulses, which are directly proportional to the amount of energy produced, are counted using a scaler or analyzed by pulse height to produce a gamma-ray spectrum, depending on the detector employed. The use of a multichannel analyzer allows for energy discrimination and the identification and quantification of the individual nuclides.

b. *Specific analytic methods*—i. *Gross alpha and gross beta activity.* The gross alpha and gross beta activity methods are the simplest of radioanalytic methods. A portion of the water sample is simply evaporated to dryness on a planchet, which is then counted for alpha and beta activities. The different types of alpha and beta counting equipment used was described above. The co-precipitation method, usually applicable for gross alpha analysis, adds one chemical separation step before counting to reduce the total solids present, thereby reducing self absorption and improving counting efficiency. It also allows for the use of larger samples for greater sensitivity.

In addition to being used to determine compliance with the MCLs, these methods would be used as screening procedures to determine if additional analyses for the specific radionuclides are necessary, if the appropriate standard is used for calibration. Gross alpha measurement would be used as a screen for radium 226 and uranium, and gross beta would be used as a screen for radium 228. If gross alpha methods are to be used for screening for radium 226 and uranium compliance, the labs however, would be required to calibrate the counter for uranium. Laboratories would also be required to generate standard curves for their counters showing the change in counting efficiency versus the total solids in the water sample (for both radium and uranium), and use these curves to correct for lower counting efficiencies found with high solids samples. If these corrections are not made, gross alpha measurements would not be considered a valid screen for radium 226 and uranium for determining compliance with the MCLs. Valid gross beta measurements can be made with waters having a much larger dissolved solids content than for alpha emitters. In beta counting efficiency does not change appreciably with solids in water samples but generation of self absorption curves is still required. EPA recommends use of strontium 90 for the beta screen for radium 228. The gross alpha screen would no longer be used to screen for the presence of radium 228 as in the current interim monitoring requirements, as radium 228 is a beta emitter and alpha screening could not be expected to reliably serve as a screen.

The Agency believes that a pure alpha particle emitter i.e., thorium 230 should be used as a standard for calibration for gross alpha activity. Past use of americium-241 tended to bias analytic results low due to the over estimate of counting efficiency because of its higher energy alpha particle. Cesium 137 is recommended for calibrating the gross beta screen.

A co-precipitation method for gross alpha activity has also been included. This method was reviewed and evaluated in the report, "Test Procedure for Gross Alpha Particle Activity in Drinking Water" (EPA, 1985c). Water samples that have high dissolved solids (>500 mg/l), are likely to have high self absorption of alpha particles which reduces the sensitivity of the measurement. When high solids are present, the Agency recommends use of the coprecipitation method.

ii. *Radon.* EPA is proposing two methods for measurement of radon in water. These are direct low volume liquid scintillation counting, and by radon de-emanation from the sample into a Lucas Cell chamber for counting. These two methods are described in the report "Two Test Procedures for Radon in Drinking Water, Interlaboratory Collaborative Study" (EPA, 1987e). EPA has slightly modified the liquid scintillation procedure described in that report and proposes to establish this revised method as EPA Method 913.

In direct, low volume liquid scintillation measurement of radon, a small volume of water (about 10 ml) is placed in a vial with a scintillation solution (mineral oil), mixed, and the vial placed in a liquid scintillation counter. Counting time can range up to 100 minutes or more, depending on the amount of radon in the sample and the desired precision of analysis. Companies using liquid scintillation counting report that they can analyze 50–200 samples daily (EPA, 1989e; 1990j).

In using the Lucas Cell method, radon-free helium or aged air (to allow the radon present to decay out) is bubbled through a water sample in a bubbling apparatus into an evacuated scintillation chamber. After equilibrium is reached (3 to 4 hours), this chamber is placed in a counter and the scintillations are counted through its window. This method generally allows measurement of lower level of radon than does low volume direct liquid scintillation. However, this is a method that is difficult to use, requiring specialized glassware and skilled technicians. Most laboratories that currently measure radon use liquid scintillation, and few have the equipment to perform Lucas Cell counting. Estimated start-up cost to obtain Lucas Cell equipment would be about $35,000 (to do 30–40 samples daily), plus technician training (EPA, 1989d). Also, a variant of the Lucas Cell method, requiring the same equipment and skills, can be used to measure radium 226 (because radon 222 is the first daughter of radium 226). The widespread use of Lucas Cells for radon analysis would make the method less available for radium 226 analyses. These factors limit use of the Lucas Cell method on a large scale for radon measurement, and EPA believes it is not appropriate as the sole basis for compliance monitoring for radon in water. EPA includes it here as an adjunct to the liquid scintillation method; the Lucas Cell method would be allowed to be used for radon measurement, but could not be relied on to support a national sampling program

for radon in water. EPA believes only liquid scintillation would allow accurate analysis of the large number of samples required nation wide by these proposed regulations.

iii. *Radium.* Several methods are available for the specific analysis of radium 226 and 228 as listed in table 15. Most of the methods in the interim regulations for radium analyses are technique dependent and time-intensive. Some of the other methods listed appear to be improvements over the existing approved methods. For example, co-precipitation steps are employed in methods for both radium 226 and 228 to purify the sample and reduce interferences.

Analysis of radium 226 by radon emanation requires allowing the radium 226 to decay to radon (to equilibrium) in the water sample, bubbling radon-free helium gas through the water into an evacuated Lucas Cell counting chamber, and then counting the chamber. While this method can produce good precision and accuracy at relatively low radium 226 levels, it is as noted above, time consuming and requires special equipment and specially trained lab technicians. These factors may limit its use on a large scale. EPA believes this is, however, one of several appropriate methods for radium 226. Appropriately conducted gross alpha screens should eliminate the need for specific radium 226 analyses in many cases.

iv. *Uranium.* Uranium can be analyzed using fluorometric (mass) or radiochemical methods, or using alpha spectrometry. The fluorometric method measures the mass of total uranium present in the sample. Because EPA is proposing an MCL expressed in mass units, this is the preferred method.

However, should the final MCL be an activity standard, the results of fluorometric analysis may be converted to an activity level using the conversion factor 1.3 pCi/μg. This conversion factor is based on evaluation of the relative occurrence of the different radioisotopes of uranium in water samples. This value is somewhat different from uranium naturally occurring in soil, which has an estimated conversion factor of 0.68 pCi/μg. The need for conversion from mass to activity following analysis, and the potential for variability in the conversion factor would be a weakness of the fluorometric method in determining compliance with an activity MCL for uranium. EPA solicits public comment on the advisability of continuing to allow use of this method to measure uranium activity levels.

The radiochemical method for uranium involves chemical separation of uranium followed by counting in an alpha counter, as described below. Uranium is specifically precipitated from the sample and the sample is then counted. In addition, uranium may be measured by alpha spectrometry which allows for the determination of individual isotopes of uranium and the calculation of the total mass of uranium present. These aforementioned methods may be found to be more expensive to perform than the fluorometric method, however EPA believes that the results will be more reliable.

c. *Sample Collection, handling and preservation.* In order to ensure that samples arriving at laboratories for analysis are in good condition, EPA is proposing requirements for sample collection, handling and preservation, as described in table 16. For radium, uranium and gross alpha and gross beta analysis, sample collection should be performed as for inorganic contaminant monitoring as described in EPA's "Manual for the Certification of Laboratories Analyzing Drinking Water" (EPA, 1990b).

For radon, because it is a volatile gas, special attention to sample collection is required. Either the VOC sample collection method, or one of the methods described in "Two Test Procedures for Radon in Drinking Water, Interlaboratory Collaborative Study" (EPA, 1987e) should be used. In addition, because plastics can absorb radon, glass bottles with teflon lined caps must be used. Finally, EPA's assessment of laboratory performance is premised on analysis of samples no longer than 4 days after collection. Laboratories unable to comply with this holding time maximum may have difficulty performing within the estimated precision and accuracy bounds. EPA solicits public comment on the proposed sample collection procedures for radon in drinking water, including any available data on radon loss from water samples during collection by different methods.

TABLE 16.—SAMPLING HANDLING, PRESERVATION, HOLDING TIMES

| Parameter | Preservative [1] | Contained [2] | Maximum holding time [3] |
|---|---|---|---|
| Gross alpha | Conc. HCl or $HNO_3$ to pH <2 [4] | P or G | 6 months. |
| Gross beta | Conc. HCl or $HNO_3$ to pH <2 [4] | P or G | 6 months. |
| Radium-226 | Conc. HCl or $HNO_3$ to pH <2 | P or G | 6 months. |
| Radium-228 | Conc. HCl or $HNO_3$ to pH <2 | P or G | 6 months. |
| Radium-222 [5] | Cool 4° C. | Glass with Teflon-lined septum | 4 days. |
| Uranium natural | Conc. HCl or $HNO_3$ to pH <2 | P or G | 6 months. |
| Radioactive Cesium | Conc. HCl to pH <2 | P or G | 6 months. |
| Radioactive Strontium | Conc. HCl or $HNO_3$ to pH <2 | P or G | 6 months. |
| Radioactive Iodine | None | P or G | 6 months. |
| Tritium | None | Glass | 6 months. |
| Photon emitters | Conc. HCl or $HNO_3$ to pH <2 | P or G | 6 months. |

[1] (All except radon-222 samples). It is recommended that the preservative be added to the sample at the time of collection unless suspended solids activity is to be measured. However, if the sample must be shipped to a laboratory or storage area, acidification of the sample (in its original container) may be delayed for a period not to exceed 5 days. A minimum of 16 hours must elapse between acidification and analysis.

[2] P = Plastic, hard or soft; G = Glass, hard or soft.

[3] Holding time is defined as the period from time of sampling to time of analysis. In all cases, samples should be analyzed as soon after collection as possible.

[4] If HCl is used to acidify samples which are to be analyzed for gross alpha or gross beta activities, the acid salts must be converted to nitrate salts before transfer of the samples to planchets.

[5] The procedure of a positive pressure collection in 60-ml glass bottles is to be followed. This procedure is described in appendix C, NIRS Sampling Instructions—Radon, p. 26, Two Test Procedures For Radon In Drinking Water, Interlaboratory Collaborative Study, (EPA, 1978e).

2. *Cost of performing analyses.* The actual costs of performing analysis may vary with laboratory, analytical technique selected, the total number of samples analyzed by a lab, and by other factors. Table 17 lists the approximate costs for analyses of drinking water samples for radionuclides. These cost data, recently assembled, are preliminary and may be different in practice for the following reasons: (a) For some analytes, few commercial

laboratories exist to help define costs; (b) as the number of experienced laboratories increases, the costs can be expected to decrease; (c) analytical costs are determined, to some extent, by the quality control efforts and quality assurance programs adhered to by the analytical laboratory; (d) per-sample costs are influenced by the number of samples analyzed per unit time. EPA solicits comments on its cost estimates from laboratories experienced in performing these analyses.

TABLE 17.—ESTIMATED COST OF ANALYSES FOR RADIONUCLIDES

| Radionuclides | Approximate cost for analysis in drinking water |
|---|---|
| Radium-226 | $85 |
| Radium-228 | 100 |
| Uranium (total) | 45 |
| U isotopic | 125 |
| Radon-222 | 50 |
| Gross alpha emitters | 35 |
| Gross beta emitters | 35 |
| Radioactive Cesium | 100 |
| Radioactive Iodine | 100 |
| Radioactive Strontium | 105 |
| Total, 89 and 90 | |
| Tritium | 50 |
| Gamma emitters | 110 |

Source: (EPA, 1991m)
Note: Estimated costs are on a per-sample basis; analysis of multiple samples may have lower cost.

3. *Method detection limits and practical quantitation levels.* Method detection limits (MDLs) and practical quantitation levels (PQLs) are two performance measures used by EPA to estimate the limits of performance of analytic chemistry methods for measuring contaminants in drinking water. An MDL is the lowest level of a contaminant that can be measured by a specific method under ideal research conditions. A PQL is the level at which a contaminant can be ascertained with specified methods on a routine basis, (such as compliance monitoring) by well managed laboratories, and within specified precision and accuracy limits. The proposed PQLs for the radionuclides are listed in Table 18 below (EPA, 1991r).

EPA considers PQLs in evaluating alternatives for the MCL. Consideration of the PQL is especially important for those contaminants for which EPA is proposing MCLGs at zero. The feasibility of implementing an MCL at a particular level is in part determined by the ability of analytical methods to ascertain contaminant levels with sufficient precision and accuracy at or near the MCL.

EPA usually defines the method detection limit (MDL) as the minimum concentration of a substance that can be measured and reported with 99 percent confidence that the true value is greater than zero. The term MDL is used interchangeably with minimum detectable activity (MDA) in radionuclide analysis, and is defined as that amount of activity which in the same counting time, gives a count which is different from the background count by three times the standard deviation of the background count. Identifying an MDL concentration is limited by the fact that MDLs (MDAs) are specific to the performance of a given measurement system, and vary from system to system.

The concept of MDL is different for radionuclide measurement than for non-radioactive chemicals. Because counting times can be expanded to days or even weeks or longer in a research setting, very small differences from background can theoretically be detected depending on research needs. These extremely long counting times are unrealistic for compliance monitoring for drinking water. EPA has sometimes set laboratory performance expectations at a level 5 to 10 times the MDL. However, MDLs (MDAs) are not necessarily reproducible on a routine basis in a given laboratory, even when the same analytical procedures, instrumentation and sample matrix are used. EPA has therefore relied on actual performance data generated in Performance Evaluation and other studies in setting standards for laboratory performance for radionuclide monitoring.

The PQL is determined through evaluation of the results of interlaboratory studies, such as performance evaluation (PE) studies. In these studies, prepared samples of known concentration are distributed for analysis to participating labs as unknowns. The results of the analyses by the participants are compared with the known value and with each other to estimate the precision and accuracy of both the methods used and the lab's proficiency in using the method. (See 54 FR 220624, May 22, 1989; 52 FR 25699, July 8, 1987; and 50 FR 46906, November 13, 1985 for further discussions on MDLs and the concept of PQLs.) MDLs (MDA) are lower than PQLs since the MDL represents the lowest level at which there is 99% confidence that the true value is greater than zero, while the PQL represents the level that can be ascertained under practical and routine laboratory conditions. The measurement of radioactivity becomes limited at low concentrations and small sample sizes due to the random nature of radioactive decay and the resulting theoretical counting uncertainty. The counting uncertainty is the major contribution to the overall uncertainty. This uncertainty must be calculated and added to the result and other uncertainties to determine whether or not the analysis has demonstrated compliance (EPA, 1991r; 1986a).

The method for estimating the PQLs for radionuclides is based on the same criteria as that used for organic and inorganic compounds and incorporates, through the methodology, the counting time and background activity in each laboratory. The PQLs for radionuclides are estimated based on results from EPA's Water Supply Performance Evaluation and Intercomparison Cross Check Studies for radionuclides with the exception of radon, for which no PE or cross check data were available. These studies are conducted as a part of EPA's laboratory certification program by EPA's Environmental Measurement Systems Laboratory in Las Vegas. A number of laboratories, ranging from 60 to 140 depending on the analyte, have participated annually and biannually, respectively, in the PE and cross check studies. There are approximately one hundred certified laboratories nationally that have the capability to conduct analyses for the radionuclides currently regulated (Ra-226 and 228, gross $\alpha$ and gross $\beta$, and also uranium). PE studies were used to estimate PQLs primarily because they are good indicators of laboratory performance. The fact that they are blind samples eliminates possible biases. The intercomparison studies cross check study data served as an alternative source of data as well as a means of verifying laboratory performance.

Because until recently there was not a standardized analytic method, nor a calibration standard for radon, no PE studies were done on radon. Both a standard method and calibration standard have now been developed and EPA plans to include radon in future PE studies. In the interim, EPA relied on two data sources for estimating performance of the available radon methods. One study was the report "Two Test Procedures for Radon in Drinking Water, Interlaboratory Collaborative Study" (EPA, 1987e), which evaluated performance of the radon methods down to 1600 pCi/l. Because EPA wanted to consider MCL alternatives lower than this, additional data on radon measurement was generated by EPA. Radon samples, supported by radium 226 bound to a resin, as low as 100 pCi/l were tested by 12 labs using liquid scintillation and 4

labs using Lucas Cells, and these data were used to evaluate performance of the methods and estimate the PQL (EPA, 1991n; 1991r). EPA considers the radon data to be a limited basis for deriving a PQL, and solicits additional information on radon analysis.

The PQLs for the radionuclides were derived applying a procedure described in 50 FR 46908, Nov. 13, 1985 and 54 FR 22100, May 22, 1989. Data from all reporting laboratories of Performance Evaluations A and B, 1983–1990 (EPA, 1991r), which include EPA and State laboratories, were used for radium, uranium, gross alpha and gross beta. For radon, data from the two studies described above were used. The PQL procedure generates acceptance limits that are set around a "true" value. Using the procedure described in these notices, the PQLs for all radionuclide contaminants were set at a concentration where it was estimated that at least 75 percent of all reporting laboratories are within the specified acceptance ranges.

The radon PQL required some special considerations. Because of the practical considerations involved in analyzing a radioisotope with a short half life (3.8 days), EPA has made allowance for transport time from the water supply to the laboratory in setting the PQL. EPA has premised its PQL on samples being analyzed no longer than 4 days after collection; mail delays could reduce accuracy for low level samples. The sample collection date and time would be required on all samples collected, and will be used by the laboratory in calculating radon levels present at the time of collection. This assumption, along with the fact that the radon PQL was based on more limited data than the other radionuclides PQLs makes it more uncertain than the other PQL values. If the PQL were premised on an 8 day time frame from collection to analysis (to make greater allowance for mail delays or back-ups in laboratories), the PQL could be 500 pCi/l. Similarly, if the counting time were increased (beyond the proposed 100 minutes), a value somewhat lower than 300 pCi/l might be achievable as the PQL. Similarly, should 100 minute counts prove infeasible, a higher PQL may need to be set. EPA solicits public comment on these issues related to the radon PQL.

Different PQL values could also be established using different acceptance limits. At an acceptance limit of ±20%, for example, the radon PQL would be about 500 pCi/l; at acceptance limits of ±40% the PQL would be 200 pCi/l. In choosing an acceptance limit of ±30% and PQL of 300 pCi/l, EPA considered the likely reliability of the overall compliance monitoring program, the number of systems that would have measurements within the error range, and the risks of radon. With an error band of ±40%, and a PQL of 200 pCi/l, approximately 19,000 of the estimated 33,000 systems affected would fall within the error band and would have potentially unclear compliance status, potentially resulting in requests for re-testing and additional burdens on states to determine and achieve compliance. When EPA chose a ±40% acceptance limit for the vinyl chloride regulation, only a few hundred systems were expected to exceed the MCL; care could be taken to accurately determine compliance status if it were in doubt. With a ±30% error band for radon at 300 pCi/l, only 5000 to 7000 systems would have potentially unclear compliance status because of data uncertainty. While this number would decrease with an even narrower error band, the individual lifetime risks would be higher. Therefore, on balance, EPA is proposing to set the PQL at 300 pCi/l.

EPA recognizes that some laboratories may be able to achieve better performance than ±30% at 300 pCi/l. Lowry (1991) very recently published a study indicating that radon could be measured using liquid scintillation counting at 300 pCi/l with an overall error of less than ±10%, assuming 4 days from sample collection to analysis. EPA is reviewing this study to identify potential improvements in its own procedures for measuring radon by LSC. However, EPA does not now believe most laboratories will be capable of the levels of precision and accuracy achieved by Lowry. EPA will soon conduct a series of performance evaluation studies on radon analysis to better gauge performance levels and to develop a data set on which to base lab certification determinations when the regulations are final. In addition, Vitz (1991) recently published a paper evaluating the effect of several different variables on error in measurements, including the effect of the type of scintillation cocktail used, the type of vials and standardization procedure used, and temperature control and instrument settings. Vitz also commented on sampling procedures. Vitz (1991) overall reported that radon levels of 200 pCi/l may be measured with 20% precision using a 20 minute count, if all parameters are optimized. EPA is reviewing this report to identify improvements in its proposed radon method, EPA Method 913.

EPA solicits public comment on these issues, and will continue to collect and evaluate additional data to refine and better substantiate the proposed PQL and the constraints on regulation imposed by limits on analytic methods. EPA specifically requests comment on information supporting PQLs higher than the proposed PQL (such as 500 pCi/l), and information supporting a lower PQL than that proposed, such as 200 pCi/l.

Public comments are requested on the approach used to determine the PQLs for radionuclide contaminants, on the proposed PQLs for these contaminants, and information is sought on any new developments in methodology for the radionuclide contaminants that may be used to support development of these regulations. EPA also solicits public comment on the usefulness of PQLs in setting standards, and the appropriateness of alternative methods for accounting for analytic methods limitations in setting standards.

TABLE 18.—PRACTICAL QUANTITATION LEVELS (PQLS) FOR RADIONUCLIDE CONTAMINANTS

| Contaminant | PQL (pCi/l) |
|---|---|
| Radium-226 | 5 |
| Radium-228 | 5 |
| Uranium natural | 5 |
| Radon-222 | 300 |
| Gross alpha emitters | 15 |
| Gross beta emitters | 30 |
| Radioactive Cesium: | |
| 134 | 10 |
| 137 | 10 |
| Radioactive Iodine | 20 |
| Radioactive Strontium: | |
| 89 | 5 |
| 90 | 5 |
| Tritium | 1200 |

(EPA, 1991r)

E. Laboratory Approval and Certification

1. *Background.* The ultimate effectiveness of the proposed regulations depends upon the ability of laboratories to reliably analyze contaminants at relatively low levels. The existing drinking water laboratory certification program (LCP) established by EPA requires that only certified laboratories may analyze compliance samples.

External checks of performance to evaluate a laboratory's ability to analyze samples for regulated contaminants within specific limits is the primary means of judging lab performance and determining whether to grant certification. EPA provides performance evaluation samples to laboratories on a regular basis;

participation in the PE program is prerequisite for a laboratory to achieve certification and to remain certified for analyzing drinking water compliance samples. Achieving acceptable performance in these studies of known test samples provides some indication that the laboratory is following proper practices. Unacceptable performance may be indicative of problems that could affect the reliability of the compliance monitoring data.

Unacceptable performance on PE studies should trigger an investigation to establish the possible cause(s) and to take corrective action. EPA recognizes that even superior analytical laboratories occasionally produce data which are outside the acceptance limits due to statistical reasons rather than from any actual analytical problems. EPA has incorporated the criteria of using fixed acceptance limits around the true value to overcome this misinterpretation of analytical results. A provision for rapid follow-up analysis is necessary if a laboratory fails the initial determination to decrease the likelihood of statistical error and to determine if a real problem exists.

EPA's present PE sample program and the approaches to determine laboratory performance requirements were discussed in 50 FR 46907 (November 13, 1985). In addition, guidance of minimum quality assurance requirements, conditions of laboratory inspections and other elements of laboratory certification requirements for laboratories conducting compliance monitoring measurements are detailed in the Manual for the Certification of Laboratories Analyzing Drinking Water, Criteria and Procedures Quality Assurance (EPA, 1990b). Participation by 300 or more laboratories in the interlaboratory studies required in the LCP demonstrates that laboratory capability and capacity for the radionuclide analyses necessary to support this proposed regulation exists.

Acceptable performance has historically been identified by EPA using one of two different approaches: (1) Regressions from performance of preselected laboratories (using 95 percent confidence limits), or (2) specified accuracy requirements. Acceptance limits based on specified accuracy requirements are developed from existing PE study data. EPA was able to use fixed acceptance limits for all of the contaminants proposed in today's rule because of the availability of PE data, with the exception of radon in which an interlaboratory collaborative study was used. EPA would prefer to use the true value approach because it is the better indicator of performance and provides laboratories with a fixed target. This approach requires that each laboratory demonstrate its ability to perform within pre-defined limits. Laboratory performance is evaluated using a constant yardstick independent of performance achieved by other laboratories participating in the same study. A fixed criterion based on a percent error around the "true" value reflects the experience obtained from numerous laboratories and includes relationships of the accuracy and precision of the measurement to the concentration of the analyte. It also assumes little or no bias in the analytical methods that may result in average reporting values different from the reference "true" value. This concept assures that reported results can be related to the percentage of variance from the PQL.

2. *Acceptance limits for radionuclide contaminants.* EPA relied on the data generated from the radon interlaboratory collaborative study to estimate acceptance limits (using the approach described in 54 FR 22131–22132, May 22, 1989). The levels (100, 200, and 500 pCi/1 in lab samples, corresponding to 200, 400 and 1000 pCi/1 in field samples analyzed 4 days after collection) used in the study were below and above the PQL (300 pCi/1) proposed in this regulation, demonstrating the participating laboratory's ability to measure at or around the proposed MCL (EPA, 1991r).

Performance data are available for all of the other radionuclide contaminants at the levels proposed for regulation (EPA, 1991r). The acceptance limits are developed using the approach noted above, resulting in the specification of a "plus or minus percent of true value" for setting acceptance limits. The available PE data indicate that both the precision and accuracy attained for specific radionuclide contaminants are contaminant specific. The "plus or minus percent of the true value" acceptance limits have been derived for each contaminant taking into consideration past performance of the laboratories and the expected precision and accuracy (EPA, 1991r).

EPA believes that the nature of radionuclides analysis (i.e., background counts, counting time, decay) requires unique analytical considerations. In some cases this may result in a greater effort from laboratories to perform analyses which meet the proposed acceptance limits. The Agency believes that these circumstances are to be addressed by the individual laboratories, when executing the analyses using the proposed methodology.

The proposed acceptance limits for the radionuclide contaminants are summarized in Table 19. The acceptance limits only apply to concentrations above the PQL.

TABLE 19.—PROPOSED ACCEPTANCE LIMITS

| Contaminant | Acceptance limits at the PQL (percent) |
|---|---|
| Radium-226 | ±30 |
| Radium-228 | ±50 |
| Uranium natural | ±30 |
| Radon-222 | [1] ±30 |
| Gross alpha emitters | ±50 |
| Gross beta emitters | ±30 |
| Radioactive Cesium: | |
| 134 | ±20 |
| 137 | ±30 |
| Radioactive Iodine | ±20 |
| Radioactive Strontium: | |
| 89 | ±50 |
| 90 | ±30 |
| Tritium | ±20 |

[1] Acceptance limits based on 100 minute count. (EPA, 1991r)

F. Proposed MCLs and Alternatives Considered

The sections below discuss derivation of each of the MCLs for the contaminants proposed for regulation. The first section presents an evaluation of radon in water and discusses special policy issues EPA considered in choosing the MCL to propose for radon. This is followed by the derivation of MCLs for radium, and uranium which are proposed today. This is followed by an alternative basis for regulation, the lowest technically feasible levels limited by affordability to large water suppliers, on which EPA requests public comment. Finally, proposed MCLs for alpha and beta emitters are discussed.

1. *Radon.* Regulation of radon in water is a complex issue for several reasons. In evaluating the various alternatives for proposing a radon MCL, EPA considered the critical policy question of whether radon in water should be regulated like other drinking water contaminants, or whether it should be regulated more in accord with its importance compared to overall radon exposures. In considering the radon MCL, EPA reviewed and evaluated alternatives over the range of 200 to 2000 pCi/l.

The primary health hazard posed by radon in water is due to its volatilization from water during household water use, and enrichment of indoor air radon levels, thereby contributing to increased

risk of lung cancer. Direct ingestion of radon may also pose some risk of stomach and other cancers. While on average water makes a small contribution to indoor air radon (about 5% for houses served by ground water), it is prevalent in drinking water from groundwater wells and does contribute to the very substantial risks posed by radon in the environment overall. Because it is a volatile gas, very little radon is expected to be found in surface water, and no surface water systems are anticipated to require treatment. EPA estimates that 30,000 or more public water systems serving 30 million or more people may have radon in water at levels exceeding an estimated $1\times10^{-4}$ risk level (150 pCi/l water).

Outdoor background levels of radon in air (about 0.1 to 0.5 pCi/l air) present estimated lifetime lung cancer risks of about 1 in 1000, a risk level above those generally accepted in EPA regulatory programs. Typical indoor air radon levels (1–2 pCi/l air) pose estimated lifetime lung cancer risks near 1 in 100. Radon is estimated to cause 8000 to 40,000 (EPA, 1989g) lung cancer deaths annually, of which about 75–400 may be attributed to radon from drinking water. As discussed in Section IV.C.2 above, the SAB/RAC is presently reviewing a proposed revision of the radon risk estimate, which could result in an approximate 30% reduction in these estimates. While the average water contribution to indoor air radon is small relative to the contribution of soil gas (for most houses), it does represent a substantial estimated number of annual cancer cases and in many communities poses individual lifetime risks above EPA's lifetime cancer risk goal for drinking water regulations of $10^{-4}$ to $10^{-6}$ (52 FR 25698, July 8, 1987). While these risk estimates have inherent uncertainties, they are no greater here than for other contaminants regulated by EPA using such a risk assessment approach.

A number of factors were considered in deciding on the approach to regulating radon. Radon in public water systems can be treated centrally rather than on a house-by-house basis as is the case with radon from soil gas. Radon can be removed from drinking water efficiently and relatively inexpensively (compared with other drinking water contaminants and treatments), although costs to small systems will be high. Also, while EPA has no authority to regulate radon in private homes (or wells), the Agency is required to regulate water delivered to customers by public water systems under the SDWA. Moreover, the 1986 amendments to the SDWA require EPA to develop an MCL for radon.

Finally, while saving an estimated 57–100 cancer cases annually (the estimated benefit of regulating radon in water in the range of 500 to 200 pCi/l, respectively) is a small number compared with the estimated 8,000–40,000 annual cancer cases caused by radon exposure (EPA, 1989g), it would be a substantial public health benefit compared with other drinking water regulations and other environmental regulation programs administered by EPA. For example, regulation of vinyl chloride in drinking water is estimated to avoid 27 cancer cases annually; the only other currently regulated individual contaminant (out of some 50 standards) with more estimated cancer risk avoided is ethylene dibromide, with an estimated 72 cases avoided per year. EPA concluded that regulation of radon in water constitutes an opportunity to achieve a substantial public health benefit in an area of high environmental risk, and to do so at relatively low cost.

EPA also considered other factors in developing its proposed radon MCL, including the ability to accurately measure radon in water and potential implementation difficulties. As discussed in Sections V.D and E, radon poses some challenges in routine measurement. Not only is it a volatile gas, it also has a short radioactive half-life (3.8 days). This means that samples must be carefully collected and promptly sent for analysis; analytic sensitivity decreases by one half for every 3.8 days after collection that the sample is analyzed. While the count time could in theory be extended to compensate for this, the 300 pCi/l PQL is premised on a count of 100 minutes, which EPA believes is at a reasonable limit, and that overall, a PQL of 300 pCi/l is at the reasonable limit of the analytic methods, based on available data. Should additional data show that it is difficult for labs to perform consistent analysis at this level with the expected precision (due perhaps to long transport times), or if data uncertainty near this value (i.e. the ±30% now estimated and believed to be acceptable) renders the MCL impossible to implement, the PQL could possibly be reviewed and revised upward. Similarly, should new data show analysis easier at low levels than now believed, the PQL could be revised downward. The recent study by Lowry (1991) indicates that some individual labs may achieve better performance than the minimum requirements proposed here.

EPA also considered potential difficulties in implementing a radon MCL at different levels in the range of 200 to 2000 pCi/l. Implementation was considered to be a serious issue only in the range of 200–500 pCi/l. A large number of PWS would be affected at any MCL in the range of 200 to 500 pCi/l, but many more systems would be affected at the 200 pCi/l MCL option. There are approximately 48,000 community and 20,000 non-community, non-transient public water systems served by ground water sources. At an MCL of 200 pCi/l, EPA estimates that 33,000 PWSs would be required to take action to meet the MCL; at 300 pCi/l, 26,000 systems would be affected; at 500 pCi/l, approximately 18,000 systems would be affected. EPA is particularly concerned about these impacts because of the overall regulatory burden being placed on water suppliers as the 83 mandated contaminants are regulated. For example, 40,000 systems are expected to need to treat to meet the recently promulgated lead and copper regulations. EPA solicits public comment on consideration of implementation issues in setting MCLs.

Because radon is a problem only for ground water dependent systems, a large percentage of the affected systems are small (85% serve fewer than 500 people). While treatment for radon is inexpensive for larger PWSs (on a per-house basis), smaller systems will have more difficulty installing treatment. Also, exemptions are unlikely to be available to these systems, as all of the options considered are in the $10^{-4}$ risk range, which is the proposed limit for identifying unreasonable risks to health (URTH) posed by drinking water contamination in the draft document: "Guidance for Developing Health Criteria for Determining Unreasonable Risks to Health" (EPA, 1990k). EPA also recognizes that there would be a substantial State burden to implement any radon MCL in the 200 to 500 pCi/l range, but that it would be greater at the lower MCL option. EPA solicits public comment on how these considerations should be factored into establishing the radon MCL.

EPA considered proposing radon MCLs in the range of 200 to 2000 pCi/l. However, 2000 pCi/l represents an estimated $10^{-3}$ risk, and this alternative was rejected as inconsistent with the SDWA and Agency risk management policy. EPA therefore concentrated much of its effort on evaluating MCL alternatives in the range of 200 to 500 pCi/l. Based on considerations of available treatment technologies, cost, risk, analytic capabilities and implementation concerns, EPA determined that 300 pCi/l is the lowest

feasible level at which radon can be regulated, and proposes to set the MCL at this level.

EPA solicits public comment on this proposal, as well as all the alternatives considered, from 200 to 2000 pCi/l. In particular, comment is sought on 200 pCi/l as an alternative, in light of new studies indicating that radon analysis may be improved in the future and the greater health benefits at this level (an estimated 20 additional cancer cases avoided annually), and also on 500 pCi/l as an alternative, if analytic difficulties in a implementation setting become apparent (i.e., the PQL may be set higher if 4 day delivery to labs proves too short) and in light of the substantial implementation burden that would be imposed by lower values.

Another issue of concern to EPA regarding radon regulation was application of the MCL to private wells. The relative magnitude of risks from radon in water (vs soil gas) is important for home owners to bear in mind when applying any radon MCL to private wells. Because the soil gas contribution to indoor radon levels is in most cases much larger than the water contribution, testing and mitigation strategies for private homes should consider all sources of radon. The mitigation strategy which is most cost-effective overall for an individual home should be used. In a majority of cases, this will mean controlling the soil gas contribution to indoor radon before ensuring that the radon MCL is met. Soil gas contributes more radon to the indoor air than does water in most houses. Economies of scale for treatment by public water systems make radon removal from water cost-effective for PWSs. Water treatment is unlikely to be the most cost-effective first step in mitigating radon in individual homes (relative to soil gas mitigation). EPA has prepared several publications for homeowners and private well owners to help them in addressing their radon problems effectively and for the lowest cost possible. These publications include, for general information on radon risks, testing in the home, and mitigation of soil gas contributions to indoor air, A Citizen's Guide to Radon and A Homeowners Guide to Radon; and for radon in water, Radionuclides in Drinking Water Fact Sheet. These materials can be requested from either the Safe Drinking Water Hotline, at 1-800-426-4791, or from the radon information hotline, at 1-800-SOS-RADON.

EPA solicits public comment on these issues regarding regulation of radon under the SDWA.

2. *Radium and Uranium MCLs.* As described above, all radionuclides cause cancer by the same mechanism, i.e., delivery of ionizing radiation to tissues (in the case of drinking water, internally), and it is therefore possible to make comparisons among them. Several comparisons may be made in the course of developing regulatory standards including the total radioactivity removed from potable water in pCi/l or more conveniently, uCi/l (one million pCi equals one uCi), the pCi/l (or uCi/l) removed, or rems ede, the effective dose to tissue. These comparisons allow assessment of the relative cost-effectiveness of controlling the different radionuclides subject to today's rule.

The control options considered by EPA for radium and uranium range from the contaminant level that can be reliably measured in routine laboratory operations (PQL) to the level representing an approximate $10^{-4}$ individual lifetime risk level, and for uranium, the level at which kidney toxicity concern arises. EPA also considered the levels to which these contaminants can be treated in drinking water in assessing which control options are technically feasible.

The Agency determined that it is technically feasible to achieve control levels of 5 pCi/l for radium 226, radium 228 and uranium. EPA then considered a number of cost factors related to the removal of these contaminants. The high cost of removing radium and uranium as compared with radon was especially apparent when the cost per uCi removed from water was estimated. Radon removal cost approximately $20,000 per uCi removed, where as radium and uranium at the lowest technically feasible levels cost from $2 million to $5 million per uCi removed. Even at radium levels equal to the $10^{-4}$ risk level, the removal cost per uCi was $600,000 to $1 million per uCi (EPA, 1991i). For uranium at the kidney toxicity limit of 20 μg/1 (representing a cancer risk of approximately $10^{-5}$), the removal cost was nearly $2 million per uCi. EPA also reviewed the cost per rem removal for these contaminants. While the cost differences are less dramatic, they are still large, and in the same direction i.e., the cost per rem of removing radium and uranium is far greater than the cost of removing radon.

In assessing the MCL alternatives, EPA also considered the chemical toxicity of uranium to the kidneys. While the $10^{-4}$ risk level is 170 pCi/l, adverse effects on the kidneys may occur at lower levels for naturally occurring uranium in the environment. EPA estimates that the DWEL for uranium is 100 μg/1, and using a 20% RSC, as discussed in section IV above, a safe drinking water level would be 20 μg/1, corresponding to approximately 26 pCi/l (using the conversion of 1.3 pCi/μg; this value rounds to 30 pCi/l). This value is below the $10^{-4}$ lifetime individual cancer risk level and is protective for kidney toxicity, the limiting adverse health effect level for naturally occurring uranium in drinking water.

The SDWA directs EPA to consider cost in setting MCLs. The Agency does not believe it would be reasonable to establish MCLs that would impose such disproportionate costs for removing what is effectively the same contaminant from drinking water. Therefore, EPA proposes to set MCLs for radium 226 and radium 228 and uranium at levels less stringent than may be technically feasible (if only affordability to large systems was taken into consideration). These levels are, for radium 226, 20 pCi/l, for radium 228, 20 pCi/l, and for uranium, 20 μg/1. The proposed levels will assure that persons served by PWS will not be exposed to greater than $10^{-4}$ lifetime cancer risk, and will for uranium also protect against possible kidney toxicity.

Table 21 compares some of the important considerations in establishing standards that are cost-effective with the same considerations at the lowest technically feasible level.

EPA recognizes that setting radium standards at levels less stringent than the interim standards may be disruptive to some state regulatory programs. The interim standard for radium is 5 pCi/l for radium 226 and 228 combined. Primacy states have been implementing and enforcing this MCL since it was effective in 1976, with mixed results. A large percentage of water systems with radium problems have chronically exceeded the radium MCL, and continue to do so. States have been working to bring these systems into compliance, and some may view a revision of the radium MCLs to 20 pCi/l for radium 226 and 20 pCi/l for radium 228 as frustrating their program planning and expectations. EPA understands these concerns and has considered them in its deliberations. The Agency believes however, that it is appropriate to revise these MCLs in light of the fact that the cost of removing radionuclides from drinking water by removing uranium and radium to the technologically feasible limit is disproportionate to the cost of removing radon.

EPA solicits public comment on this approach to setting MCLs, and on the MCL levels proposed. EPA also solicits

comments from systems that have installed or need to install treatment to meet the current interim standards.

3. *Alternative MCLs.* EPA has generally set MCLs at the lowest technically achievable level, with cost considered largely in terms of whether the standards would be affordable to large public water systems.

Key technical information used in assessing the lowest feasible levels has been based on engineering and analytic chemistry capabilities, with affordability determinations based on the estimated increase in residential water bills.

Engineering feasibility is assessed based on the treatments available as BAT, and the occurrence of the regulated contaminants. The BAT treatments for these contaminants are, at maximum efficiency, capable of achieving 90% and greater removals for all of the regulated contaminants. Radon removal by aeration treatment can exceed 99% removal. Occurrence of the contaminants is reviewed in detail in section III of this notice. The average radon level in the NIRS survey was about 800 pCi/l, with a maximum of 26,000 pCi/l. Maximum radium 226 and 228 levels in the NIRS survey were both below 20 pCi/l (occurrence at higher levels is based on a statistical projection of the 1000 data points in NIRS to the entire country). The maximum uranium level in NIRS was 88 pCi/l. Based on treatability and occurrence, radon could theoretically be treated to 100 pCi/l or lower in most water supply systems, radium 226 and 228 could be treated to 2 pCi/l or lower in most water supplies, and uranium could be treated to 5 pCi/l or lower as described in Table 20.

In reviewing analytic capabilities, EPA identifies the practical quantitation level, or PQL. This is the level EPA believes can be measured on a routine basis in compliance monitoring, within a fixed error rate (often ± 20%–40%), as described in section V.E. In reviewing the analytic capabilities, EPA determined that the radon PQL could be established at 300 pCi/l, and that radium 226, radium 228, and uranium PQLs can be set at 5 pCi/l.

The cost of treatment for removal of these contaminants ranges from about $4 per household per year (for radon) to $60 per household per year for radium. These are costs to large public water systems serving 50,000 to 75,000, and cost to residents of small systems would be higher. All of these costs are within the range that EPA considers to be affordable for large public water supply systems.

Based on these considerations, EPA would consider the lowest feasible levels to which these contaminants could be regulated are 300 pCi/l for radon, 5 pCi/l for radium 226, 5 pCi/l for radium 228, and 5 pCi/l for uranium (kidney toxicity by uranium is not the limiting factor here, as it is above) and 15 pCi/l for adjusted gross alpha. EPA solicits public comment on these levels as possible alternative MCLs for the radionuclides.

TABLE 20.—BACKGROUND INFORMATION ON RADIONUCLIDES

| | Rn-222 | Ra-226 | Ra-228 | U | Alpha |
|---|---|---|---|---|---|
| Lowest Treatment level (pCi/l) | <100 | <2 | <2 | <5 | <5 |
| PQL (pCi/l) | 300 | 5 | 5 | 5 | 15 |
| Treatment Cost $/HH/yr.—Large systems | $4 | $60 | $60 | $20 | $130 |
| $1\times10^{-4}$—Lifetime risk level (pCi/l) | 150 | 22 | 26 | 170 | n/a |
| Pop exposed > $10^{-4}$—Lifetime Risk (pre-regulation) | 27M | 890K | 100K | 50K | n/a |
| Estimated drinking water cases/yr. (pre-regulation) | 195 | 8 | 2.1 | 1.6 | n/a |

Source: EPA 1991i

TABLE 21.—COMPARISON OF PROPOSED AND LOWEST FEASIBLE MCL OPTIONS

| | Rn-222 | Ra-226 | Ra-228 | U | Alpha |
|---|---|---|---|---|---|
| MCL Options (pCi/l): | | | | | |
| Proposed | 300 | 20 | 20 | 20 μg/1 | 15 |
| Alternate | 300 | 5 | 5 | 5 | 15 |
| Lifetime risk: | | | | | |
| Proposed | $2\times10^{-4}$ | $1\times10^{-4}$ | $8\times10^{-5}$ | $1\times10^{-5}$ | n/a |
| Alternate | $2\times10^{-4}$ | $2\times10^{-5}$ | $2\times10^{-5}$ | $3\times10^{-6}$ | n/a |
| Cases avoided/yr.: | | | | | |
| Proposed | 80 | 3 | 0.2 | 0.2 [1] | n/a |
| Alternate | 80 | 5 | 0.6 | 0.6 | n/a |
| Fraction of total cases avoided/yr.: | | | | | |
| Proposed | 0.41 | 0.38 | 0.03 | 0.17 | n/a |
| Alternate | 0.41 | 0.63 | 0.19 | 0.33 | n/a |
| No. Sys affected: | | | | | |
| Proposed | 26,000 | 70 | 40 | 1500 | 130 |
| Alternate | 26,000 | 590 | 500 | 7200 | 130 |
| Total $/yr.: | | | | | |
| Proposed | $180M | $30M | $6M | $55M | $37M |
| Alternate | $180M | $120M | $55M | $225M | $37M |
| $/rem(K): | | | | | |
| Proposed | $1K | $1.6K | $3.9K | $380K | n/a |
| Alternate | $1K | $5K | $17K | $700K | n/a |
| $/uCi: | | | | | |
| Proposed | $20K | $600K | $1.6M | $2M | n/a |
| Alternate | $20K | $2M | $2M | $4M | n/a |
| Incr. $/case: | | | | | |
| Proposed | $2.9M | $23M | $50M | $57M | n/a |
| Alternate | $2.9M | $75M | $158M | — | n/a |

Source: EPA 1991i

[1] Approximately 900,000 people also reduced to exposure level with increased probability of kidney toxicity.

4. *Gross alpha and beta and photon MCLs.* Alpha and beta emitters are a way of broadly grouping a large number of radioactive contaminants based on their radioactive characteristics. Radioactive isotopes have characteristic decay patterns which allow them to be identified as being primarily alpha, beta or photon (gamma ray) emitters (although many compounds decay by a combination of these routes with one being predominant). Alpha emitters are primarily naturally occurring compounds, although some are man-made (such as plutonium). Beta emitters are mostly man-made compounds, but some are naturally occurring (such as radium 228 and lead 210). The 1986 amendments to the SDWA direct EPA to establish MCLs for these two categories of radioactive contaminants (section 1412(b)(1)).

Because they emit ionizing radiation as they decay, they are all considered to be group A human carcinogens, and the proposed MCLG for both alpha and beta/photon emitters is zero, as described in Section IV–C above.

The other radionuclides proposed for regulation today all fall into one of these categories (radium 226, radon and uranium are alpha emitters, and radium 228 is a beta emitter). EPA has proposed to set individual MCLs for radon, radium and uranium because they occur in the water of an important number of public water supplies over substantial parts of the country. This is not true for the majority of radionuclides. Many of the other alpha and beta emitters have never been detected in drinking water, and others only sporadically. Many of the naturally occurring radionuclides may be found in water because they are radioactive progeny of the more commonly occurring radionuclides for which individual MCLs are being proposed. The man-made radionuclides may be found in water as a result of their release from facilities where they are produced, stored, used or disposed of. These could include nuclear power plants, research or manufacturing facilities, high or low level radioactive waste disposal sites, and others.

There are approximately 2000 nuclides that fall into these categories. Many of these have very short half-lives, and are not of concern in water; several hundred have longer half lives and could be important. EPA is proposing to regulate these contaminants as classes of compounds because they all cause cancer by the ame basic mechanism. Also, EPA believes that none of them individually occur with enough frequency to warrant a national regulation, but that as groups they are found frequently enough to warrant public health concern, and therefore regulation. EPA further believes that public water systems using water that is known to have the potential to become contaminated with nuclear reactor (or other nuclear facility) releases, by either scheduled or unscheduled release, should monitor for these compounds and that there should be standards in place to protect the public should high levels occur.

a. *Gross alpha.* There is currently an interim MCL for alpha emitters which was set as a screen for the occurrence of both radium 226 and other alpha emitting radionuclides that might be present in drinking water. Few water systems have ever exceeded the gross alpha MCL (except when it is due to high radium levels). The 15 pCi/l MCL was intended to limit overall exposure to alpha radiation in drinking water, and EPA continues to believe that it is important to limit overall alpha emitter exposure. EPA is proposing to retain but modify the gross alpha MCL. As discussed in Section IV–C, alpha emitters are carcinogenic, and EPA is proposing to set the MCLG for gross alpha at zero, in accord with EPA's general policy for regulating carcinogens occurring in drinking water.

Most alpha emitters in drinking water occur naturally. Alpha emitters other than radium and uranium that have been found in drinking water include polonium and thorium as discussed in section III–F above. In addition, plutonium and americium may occur. EPA believes the potential for occurrence of these contaminants indicates that a screening standard would be appropriate to restrict the limited exposure that may occur, while not requiring that separate MCLs, with required separate monitoring, be set. The available data indicate that occurrence of alpha emitters other than those specifically regulated (i.e. radon, radium and uranium) is infrequent. EPA believes this limited occurrence means that individual, nationally applicable MCLs are not warranted, but that some mechanism to detect potential occurrence and reduce exposure when alpha emitters do occur is warranted. EPA believes that a gross alpha MCL would provide a mechanism to detect and reduce exposure to alpha emitters, while not overburdening water systems with monitoring requirements.

EPA has reviewed the risks for these contaminants, and discusses them in Section IV–C above and in greater detail in the alpha emitter criteria document. As noted above, the MCLG for alpha emitters is being proposed as zero, because all ionizing radiation is considered to be carcinogenic. Lifet .e risks in the $1\times10^{-4}$ range for alpha emitters in drinking water are 14 pCi/l for polonium, 50–125 pCi/l for various thorium isotopes, and 7 pCi/l for plutonium (see appendix C).

EPA has also reviewed the available treatment information to determine what levels of alpha emitters can be successfully removed. EPA has also conducted limited pilot scale studies to better determine the treatability of polonium (EPA, 1991k). BAT has been identified as reverse osmosis. Ion exchange, GAC, and coagulation and filtration have been shown to remove some of these contaminants, but data are inadequate to consider any of them BAT. RO can remove up to 99% of alpha emitters that may be present in drinking water.

The analytic methods for measuring alpha emitters is the gross alpha test (EPA No.900.0) or gross alpha by coprecipitation, when high amounts of solids are present. As discussed in section V.D, the PQL for gross alpha is 15 pCi/l, with ±40% error.

While retaining the gross alpha MCL, EPA proposes to revise its approach to this standard. Because separate MCLs are being proposed for radium and uranium, the gross alpha MCL will not include them (the current gross alpha standard includes radium 226 but excludes uranium and radon). The alpha emitter MCL will be defined as gross alpha, less radium 226, and uranium (and not including radon). To avoid confusion of the regulatory use of the term "gross alpha" and the laboratory measurement that is called gross alpha, EPA proposes to designate the MCL as "adjusted gross alpha", to indicate that compliance with the gross alpha MCL would be determined by first measuring gross alpha and if the value exceeds the MCL, measuring and subtracting out the radium 226 and uranium contributions (because of the way the test is conducted, any radon initially present in a sample would be driven off by the sample preparation; therefore, while the adjusted gross alpha measure does not include radon, neither would radon be subtracted from the gross alpha measurement, as would radium 226 and uranium). EPA proposes that the "adjusted gross alpha" MCL would be gross alpha minus radium 226 and minus uranium, and proposes that the adjusted gross alpha MCL be set at 15 pCi/l. This MCL would, overall, limit exposure to other radionuclides and ensure that risks from alpha emitting radionuclides would not exceed the $10^{-4}$ to $10^{-6}$ lifetime risk range. EPA considers this to

be the lowest level at which it is feasible to set the adjusted gross alpha MCL, bounded by $10^{-4}$ lifetime risk.

EPA recognizes that there could be situations in which several radionuclides occur together in drinking water. Based on the data available today, it appears unlikely that radionuclides will co-occur at levels near the proposed MCLs. Therefore, the potential for overall risks to be greater than $10^{-4}$ appears small. EPA solicits public comment on its proposed MCLs in regard to possible co-occurrence of radionuclides and possible approaches to ensuring that overall risks do not rise above the $10^{-4}$ level.

Assessing the impacts of the proposed adjusted gross alpha MCL is difficult due to uncertainties in the available data, and also because of its "screening" nature. As a worst case, EPA estimates that up to 130 systems could exceed an adjusted gross alpha MCL of 15 pCi/l, and believes the actual number of systems would be far below that number. No violators of the current gross alpha MCL have been identified in a search of the EPA compliance data base.

b. *Beta and photon emitters.* There are over 200 beta and photon emitters covered by this regulation (see appendix B). Most of these are man-made isotopes and are the waste from nuclear power plants, medical industry, nuclear weapon development, and other industries. The Agency regulated the beta and photon emitters as a class in the NIPDWRs with an MCL of 4 mrem per year effective dose equivalent (whole body or any organ), and proposes to retain the interim standard as a final MCL.

Strontium-90, strontium-89, cesium-134, cesium-137, iodine-131, and cobalt-60 are the beta emitters with the highest toxicity. These are also the most likely to be found in reactor releases or accidents.

Ion exchange and reverse osmosis are capable of removing up to 99% of these isotopes, with several exceptions. Only reverse osmosis is capable of removing iodine. Also, while there is no treatment for tritium other than use of an alternate water source, EPA considers an alternate water source (including bottled water) to be BAT for this limited purpose. Both ion exchange and reverse osmosis may be used to remove mixed commercial radionuclides. The treatment cost varies between $330 to $540 per household per year for a small system and between $84 to $230 per household per year for a large system.

Beta emitters are measured by the gross beta method (EPA No. 900.0), which has PQL of 30 pCi/l.

At the time of the interim standards, there was great concern about the fallout of strontium 90 (and others) from above-ground nuclear tests. Since the ban on above-ground tests in 1963, environmental levels have declined and the concern now has shifted more toward water which is vulnerable to radionuclides released from industrial and governmental (DOE) facilities and, to a lesser degree, landfills. Controls are in place for discharges from these sources under the Clean Water Act, RCRA, and NRC and DOE regulations. These regulations are intended to be protective of the environment and public health. The drinking water standard under these conditions becomes an adjunct to these release restrictions, and establishes values which would be used in case of an accident or unscheduled release, where these regulations are violated. EPA nonetheless believes it is necessary and appropriate to establish the beta and photon emitter MCL to ensure protection of public health in these circumstances, and is required to set such a standard by the 1986 amendment to the SDWA, which listed beta emitters as among the 83 contaminants for which MCLs must be developed.

The Agency is proposing to set the beta MCL at 4 mrem ede per year. The individual lifetime risk at 4 mrem ede/year is estimated to be approximately $1 \times 10^{-4}$.

One naturally occurring beta emitter of potential concern is lead-210. Lead-210 is the first long lived progeny of radon-222, and could be anticipated to co-occur in ground water where radon occurs. However, there are few data on lead-210 occurrence in water, and modeling exercises of lead movement through the environment indicate that low levels (mass) of lead may bind to soils and be unavailable to water (EPA, 1986e). Because data on which to base risk and regulatory impact estimates are lacking, EPA is proposing to require unregulated contaminant monitoring for lead-210, as discussed below, and consider it for possible regulation in the future.

G. Proposed Monitoring and Reporting Requirements

Compliance monitoring requirements are being proposed for determining compliance with the MCLs. In developing the proposed compliance monitoring requirements for these contaminants, EPA considered:

(1) The likely source of contamination of drinking water,

(2) The differences between ground water and surface water systems,

(3) The collection of samples which are representative of consumer exposure,

(4) The economic burden of sample collection and analysis,

(5) The use of historical monitoring data to identify vulnerable systems and to specify monitoring requirements for each of the individual systems,

(6) The limited occurrence of some contaminants, and

(7) The need for States to tailor monitoring requirements to site-specific conditions.

A major goal has been to make these monitoring requirements consistent with the monitoring requirements for other regulated drinking water contaminants as described in the standardized monitoring requirements. EPA wants to develop monitoring requirements that will meet the statutory goal of ensuring compliance with the MCLs while providing efficient utilization of State and utility resources. The monitoring program will focus on targeting the monitoring efforts in individual water supply systems to the contaminants that are likely to be present. The general approach taken by EPA includes:

- Providing latitude to the States to target monitoring efforts based on vulnerability of the system to a particular contaminant if its occurrence is not widespread and thus avoiding unnecessary monitoring efforts.
- Allowing the use of recent monitoring data in lieu of new data if the system has conducted a monitoring program using reliable analytical methods.
- Allowing the use of historical monitoring data meeting specified quality requirements and other available records to make decisions regarding the vulnerability of a system to contamination.
- Requiring all vulnerable systems to conduct repeat monitoring unless the system demonstrates that its vulnerability status has changed.
- Designating sampling locations and frequencies that permit simultaneous monitoring for all regulated contaminants, whenever possible and advantageous.
- Requiring that samples be taken during high vulnerability times.

EPA is proposing to require monitoring to begin at the start of the next 3 year period after the regulation is effective, which is January 1, 1996, in accord with the standardized monitoring requirements. However, under Section 1445, monitoring, reporting, and recordkeeping regulations which may be used to assist in determining compliance may be made effective on the date that

the regulation is finalized. EPA solicits public comment on the effective date for the monitoring requirements, particularly whether monitoring should begin before January 1, 1996.

Surface water systems must sample at points in the distribution system which are representative of each source i.e., at each entry point to the distribution system which is located after any treatment and which is representative of each source. The number of samples will be determined by the number of sources or treatment plants. Sampling must be done at entry points to the distribution system for ground water systems and the number of samples will be determined by the number of entry points. This approach will make it easier to identify possible contaminated sources (wells) within a system. In both surface and ground water systems, the proposed sampling locations are such that the same sampling locations may be used for the collection of samples for other source-related contaminants such as the volatile organic chemicals and inorganic chemicals, which simplifies sample collection efforts.

Because of the large number of regulations for drinking water contaminants that have been developed in recent years, EPA recently sought to coordinate contaminant monitoring to simplify the requirements imposed on public water systems. This coordination is called the standardized monitoring framework. EPA announced this framework in January of 1991 (56 FR 3526–3597, January 30, 1991), and held a public meeting to discuss the concept and solicit public comment. Reaction of the water supply industry was generally favorable, and EPA has proceeded to implement the standardized monitoring framework in the context of individual rulemakings (56 FR 3526, January 30, 1991). The monitoring requirements for the radionuclides regulations will rely on the basic structure described in the documents on standardized monitoring. Initial monitoring will begin with the compliance period that begins January 1, 1996, and would be required to be completed by January 1, 1999. EPA solicits public comment on the use of the Standardized Monitoring scheme for the radionuclides regulations.

The monitoring requirements for the different radionuclides would vary depending on their likely occurrence. For example for radon, all ground water systems would be required to collect one sample from each entry point to the distribution system quarterly at first and annually after compliance is established, whereas surface water systems are not required to test for radon.

Only systems designated as vulnerable would be required to monitor gross beta for beta and photon emitters. Vulnerability for beta and photon emitters would be determined by states, and would be based on the proximity of the system to potential sources of man-made radionuclides, such as nuclear power facilities, universities or other research facilities, or manufacturing facilities that use radioactive material, or radioactive waste disposal sites (for either high or low level waste). EPA suggests a 15 mile radius around such facilities as the vulnerable area for purposes of requiring gross beta monitoring.

MCL exceedences would trigger increased monitoring requirements, which could be reduced to the base monitoring requirements once compliance with the MCL is re-established.

Because these contaminants present risks from long-term, chronic exposure, only community and non-community, non-transient public water supplies would be required to monitor for them.

1. *Radon.*—a. *Radon monitoring for surface water supplied systems.* Systems relying exclusively on surface water as their water source would not be required to sample for radon. Systems that rely in part on ground water would be considered groundwater systems for purposes of radon monitoring. Systems that use ground water to supplement surface water during low-flow periods would be required to monitor finished water at each entry point to the distribution system for radon during periods of ground water use, according to the groundwater monitoring requirements. Also, groundwater under the influence of surface water would be considered ground water for this regulation.

b. *Radon monitoring for ground water systems.* Systems relying wholly or in part on ground water would be required to sample for radon quarterly for one year at each well or entry point to the distribution system. If the average of all first year samples at each well is below the MCL, monitoring would be reduced to one sample annually per well or entry point to the distribution system. All samples would be required to be of finished water, as it enters the distribution system and after any treatment.

c. *Radon compliance and increased and decreased monitoring requirements.* Compliance would be determined based on an average of 4 quarterly samples in the initial year of monitoring, and annual samples in the second and third years of the first compliance period. The reported values (rather than the bottom of the error band associated with the measurements) would be averaged together; systems with averages exceeding 300 pCi/l at any well or sampling point would be deemed to be out of compliance. Systems exceeding the MCL would be required to monitor quarterly until the average of 4 consecutive samples are less than the MCL. Systems would then be allowed to reduce monitoring to one sample annually per well or sampling point. States would be allowed to reduce monitoring requirements to one sample per three-year compliance period per well or sampling point, if the state determines that the system is reliably and consistently below the MCL. Systems monitoring annually or once per three year compliance period that exceed the radon MCL in a single sample would be required to revert to quarterly monitoring until the average of 4 consecutive samples is less than the MCL. Ground water systems with unconnected wells would be required to conduct increased monitoring only at those wells exceeding the MCL.

EPA is proposing more frequent monitoring for radon than for the other radionuclides because levels are known to vary diurnally and over the course of a year. Variability may be 100% or more. EPA solicits public comment on the proposed radon monitoring requirements, and on the advisability of allowing up to nine years between samples, and the criteria that might be used to identify systems very unlikely to exceed the MCL for which monitoring once every nine years may be adequate.

2. *Gross Alpha, Radium-226 and Uranium.* All ground water and surface water systems would be required to monitor annually for gross alpha, and if the gross alpha measurement exceeds the MCL for radium 226 and/or uranium, specific analyses for the contaminant(s) exceeding the MCL would be required. Systems would be required to sample each well or entry point to the distribution system. Samples would be of finished water after any treatment. Systems exceeding the MCL would be required to monitor quarterly until four consecutive samples were less than the MCL. For systems not exceeding the MCL after three consecutive annual samples are taken, sampling would be reduced to one sample per three year compliance period. States would be allowed to reduce monitoring to once per nine year compliance cycle if the state determines that a system consistently and reliably meets the

MCL. Systems with unconnected wells would be required to conduct increased monitoring only at those wells exceeding the MCL.

Gross alpha measurement would be used both to determine compliance with the adjusted gross alpha MCL and as a screen for radium 226 and uranium, provided the analytic requirements described in section V.D are met. These requirements include appropriate calibration of equipment to ensure that neither radium 226 or uranium are underestimated by the screen. Compliance determinations for adjusted gross alpha, radium 226 and uranium based on gross alpha measurements are listed in Figure 2. Adjusted gross alpha is defined as the gross alpha measurement less radium 226 and less uranium. Because the adjusted gross alpha MCL is less than the radium 226 and uranium MCLs, one or both of these may need to be specifically analyzed to determine adjusted gross alpha compliance even though the gross alpha screen indicates that both the radium 226 and uranium MCLs have been met (i.e., if the gross alpha is between 15 and 20 pCi/l).

Systems with gross alpha less than the radium 226 or uranium MCLs would be considered to be in compliance with those respective MCLs. Specific analyses of either or both contaminants would be required if the gross alpha measurement exceeds the respective MCL.

For adjusted gross alpha, radium 226 and uranium, compliance would be based on the average of an initial sample exceeding the MCL and a confirmation sample (as the reported values, not the lower bound of the error band associated with the measurement).

EPA solicits public comment on the proposed radium 226 and uranium monitoring, and use of the gross alpha screen for these contaminants, especially in light of the fact that the uranium MCL is proposed to be set based on mass rather than activity measurements.

3. *Radium-228.* All ground water and surface water systems would be required to monitor annually for radium 228. Systems would be required to sample each well or entry point to the distribution system. Samples would be of finished water after any treatment. Systems exceeding the MCL would be required to monitor quarterly until four consecutive samples were less than the MCL. For systems not exceeding the MCL, sampling would be reduced to one sample per three year compliance period after three consecutive annual samples are below the MCL. States would be allowed to reduce monitoring to one sample per nine year compliance cycle if the state determines that a system consistently and reliably meets the MCL. Systems with unconnected wells would be required to conduct increased monitoring only at those wells exceeding the MCL.

Gross beta measurement would be allowed to serve as a screen for radium 228 levels. Systems with gross beta levels less than the radium 228 MCL would be considered to be in compliance with the radium-228 MCL. Systems with gross beta levels exceeding the radium-228 MCL would be required to measure radium-228 specifically.

For radium-228, compliance would be based on the average of an initial sample exceeding the MCL and a confirmation sample (as the reported values, not the lower bound of the error band associated with the measurement).

4. *Beta and photon emitters.* Because of revisions in the estimated drinking water concentrations of various beta and photon emitters that correspond to a yearly dose of 4 mrem ede, EPA is proposing to revise and simplify the monitoring requirements for beta and photon emitters. The revised estimates in general allow for less specific monitoring and greater reliance on the gross beta screen. In addition, because of the special vulnerability circumstances which could result in the presence of man-made beta emitters in drinking water, monitoring more frequent than that required for other contaminants under the standardized monitoring program is being proposed.

The current gross beta monitoring program requires all vulnerable PWS and all systems serving 100,000 or more persons to perform a screen plus specific analyses for several contaminants. EPA proposes to revise these requirements so that only vulnerable systems would be required to perform gross beta monitoring. States would make the vulnerability determination for each PWS, and it would be based on the proximity of the water source for the system to facilities using or producing radioactive materials. EPA suggests that all systems within a 15 mile radius of these facilities be considered vulnerable, as well as systems using a water source clearly influenced by such a facility. All systems using water that could be influenced by releases (either scheduled or unscheduled) from facilities such as nuclear power plants, Department of Energy nuclear facilities, Nuclear Regulatory Commission licensees, low or high level nuclear waste storage or disposal facilities, or other facilities using or making radioactive material should be considered vulnerable. Monitoring could be required of either surface or ground water dependent systems, depending on their vulnerability.

EPA considered two gross beta monitoring programs. Under the first alternative, the current 50 pCi/l screen for presumptive compliance, along with additional specific monitoring for tritium and strontium 90 would be required. If the 50 pCi/l screen were met, and tritium and strontium were individually and combined below the 4 mrem ede value, the system would be considered to be in compliance. The beta screen would be required quarterly and the tritium and strontium would be required annually, as described in Figure 3. Under the second alternative, the beta screen would be set at the gross beta PQL of 30 pCi/l, and only specific analysis of tritium would be required. The screen would be required quarterly and the tritium analysis annually. Because of the vulnerable status of these systems, no reduced monitoring would be allowed. Under either alternative, water suppliers would be required to identify the particular contaminants present if the screen is exceeded, and add the estimated doses including tritium and strontium 90 under the first alternative to ensure that the 4 mrem ede MCL is not exceeded. The values in Appendix B would be used to perform this calculation. EPA believes that either of these monitoring plans would ensure the safety the public served by vulnerable water supplies.

EPA proposes to establish the first alternative, of retaining the 50 pCi/l screen for presumptive compliance with the gross beta MCL and specific analyses for tritium and strontium 90 (because 50 pCi/l would not adequately screen for tritium and Sr-90 at the 4 mrem ede level). EPA solicits public comment on reducing the screen to 30 pCi/l and eliminating the strontium 90 measurement.

5. *Monitoring schedule.* In order to moderate demand on analytic laboratories, the monitoring requirements for determining compliance with these regulations would be phased-in over a 3 year period. States would determine the schedule for phasing in monitoring, but all systems would be required to have performed their first year of sampling by the end of the first 3 year compliance period (i.e, December 31, 1998).

6. *Grandfathering data.* Interim MCLs have been in place and analytic methods available for radium, gross alpha and beta and photon emitters since 1976. Validated analytic methods for other radionuclides, including

uranium, have also been available since then. Most water supply systems that would be covered by these proposed regulations have been monitoring for the regulated contaminants for several years. Data collected in compliance with the interim MCL requirements (i.e., analyses by certified laboratories) would be allowed to be used to determine compliance with the proposed MCLs. While no EPA-approved radon analytic method has been available, EPA recognizes that many water supplies have conducted some radon monitoring in recent years. Data on radon occurrence generated using methods and with laboratory performance similar to those proposed here would be allowed to be used to determine compliance, at the discretion of the State.

7. *Monitoring for unregulated contaminants.* As discussed above, available data are inadequate to determine whether lead-210 occurs frequently enough to warrant public health concern. EPA is therefore proposing to require all community and non-community, non-transient public water systems to collect one sample from each well or entry point to the distribution system, after any treatment, and analyze the sample for lead-210. States may require systems to collect one confirmation sample. All regulated systems would be required to collect and analyze one sample for lead-210, so that adequate data on which to assess exposure may be obtained. EPA solicits public comment on this proposed monitoring for unregulated contaminants.

EPA solicits public comment on the proposed monitoring requirements described above.

BILLING CODE 6560-50-M

315

FIGURE 2. GROSS ALPHA SCREENING

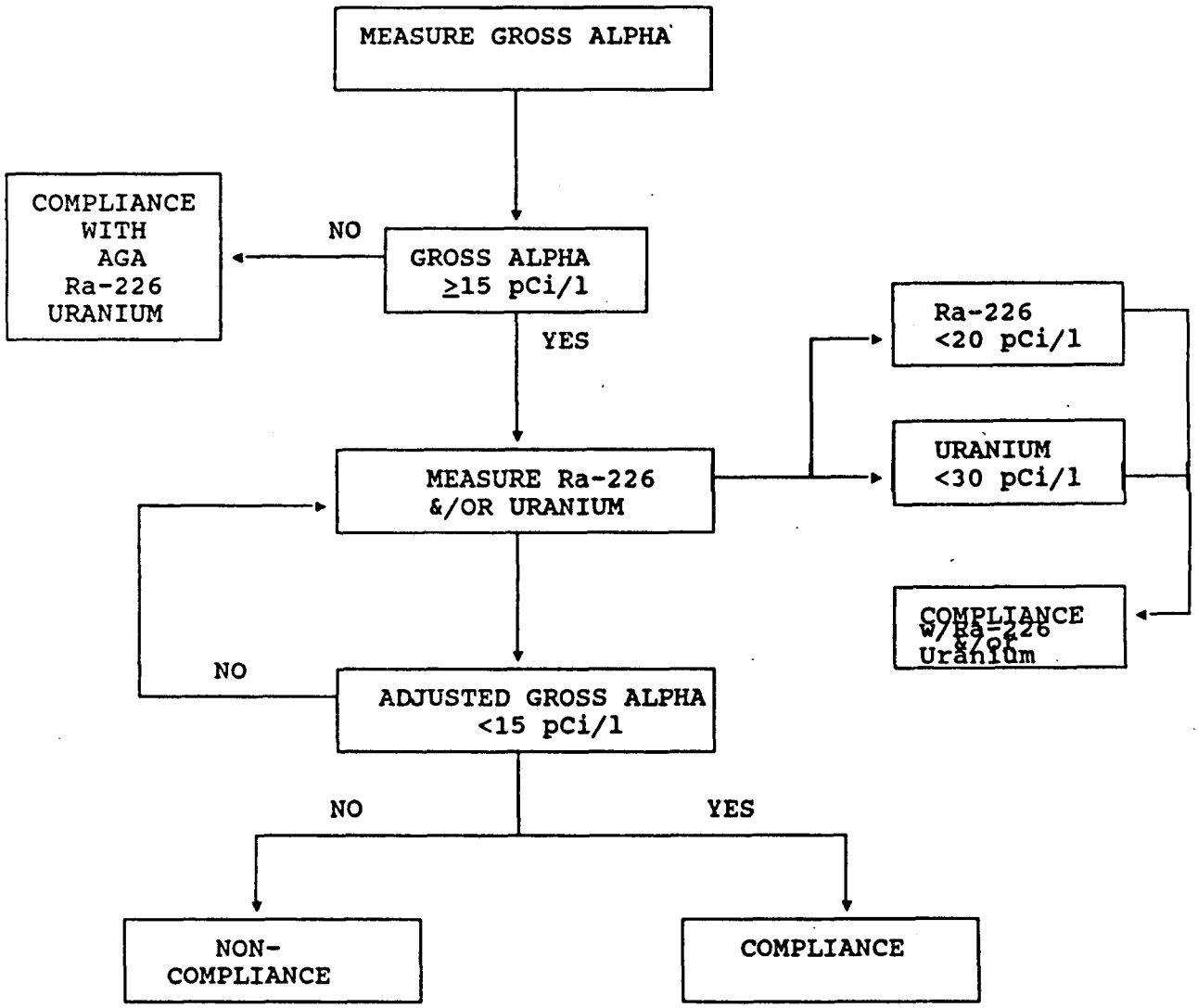


AGA= Adjusted Gross Alpha

316

FIGURE 2. GROSS ALPHA SCREENING (Continued)

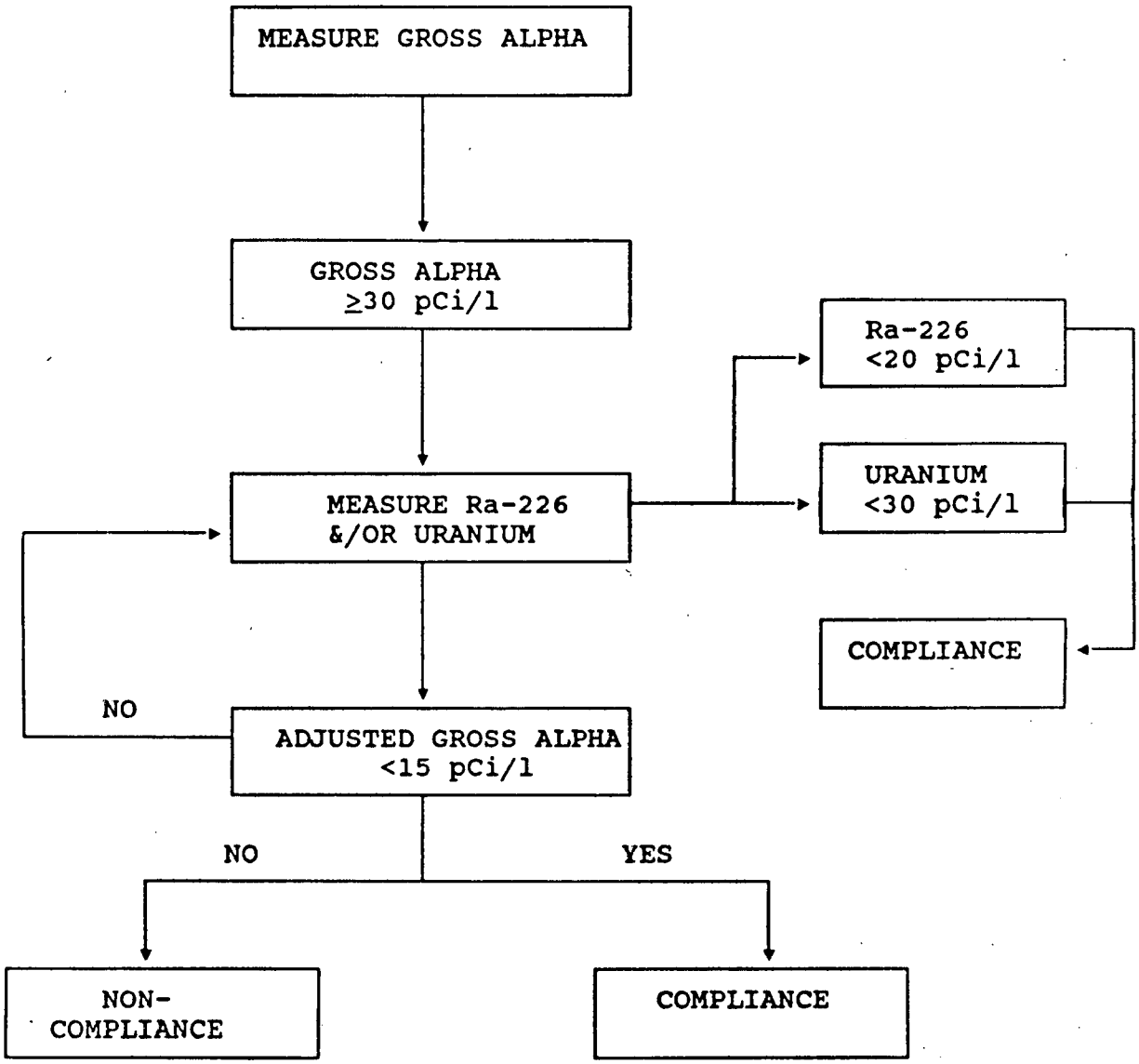

317

FIGURE 3. GROSS BETA SCREENING OPTIONS

Option 1: Higher Screening Level

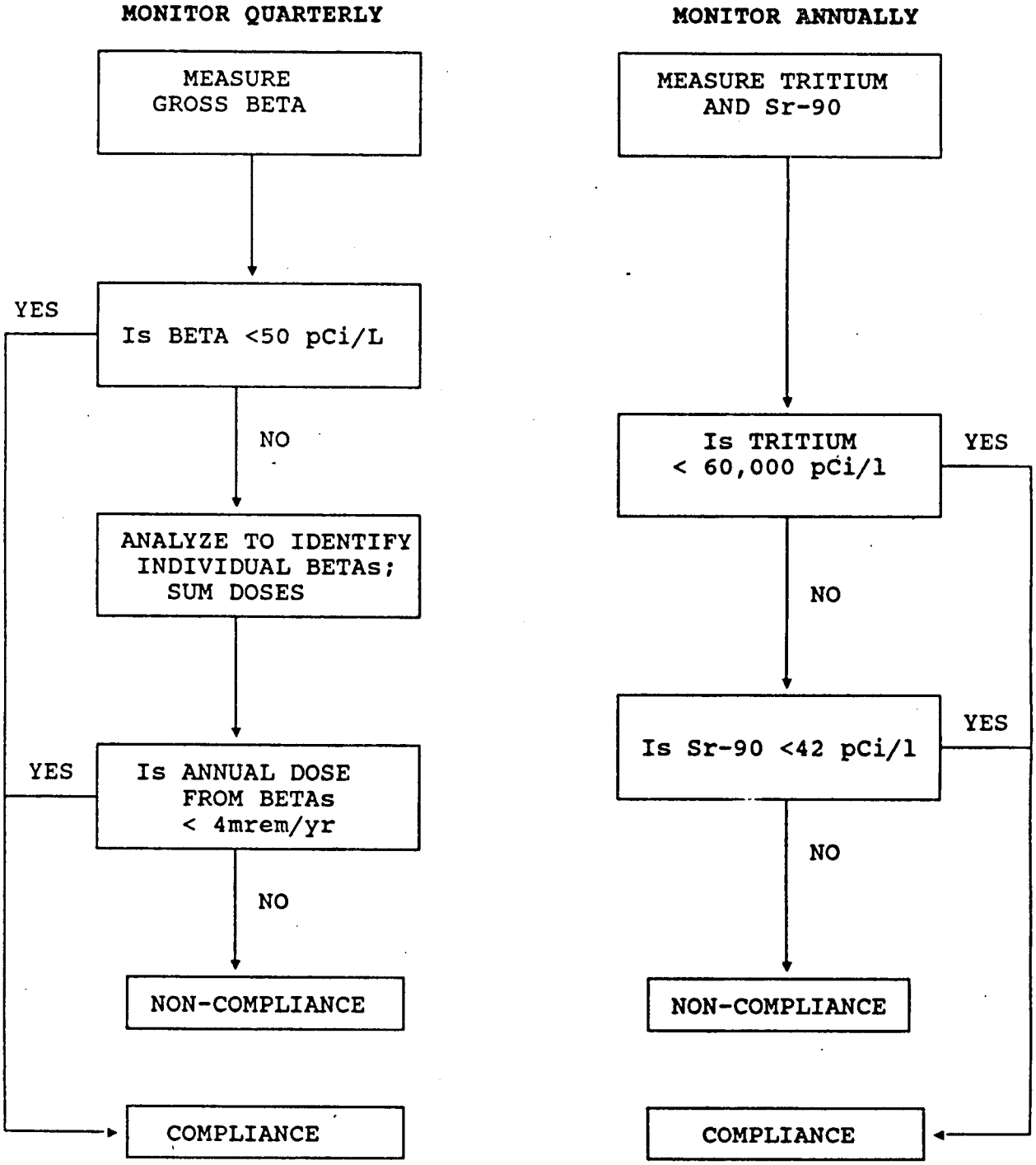

318

FIGURE 3. GROSS BETA SCREENING OPTIONS (Continued)

Option 2: Low Screening Level

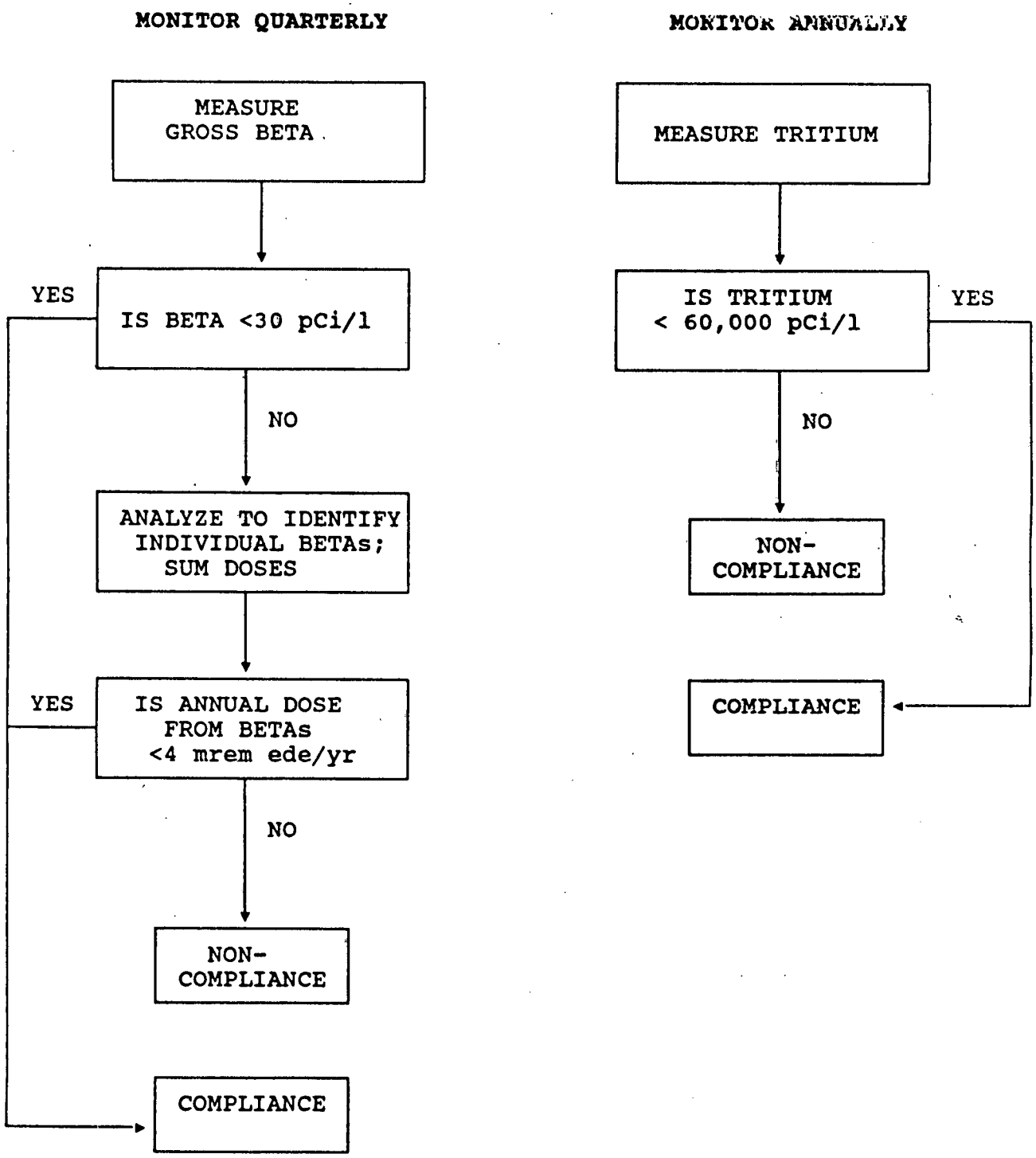


LING CODE 6560-50-C

H. State Implementation

The Safe Drinking Water Act provides that States may assume primary implementation and enforcement responsibilities. Fifty-four out of 57 jurisdictions have applied for and received primary enforcement responsibility (primacy) under the Act. To implement the Federal regulations for drinking water contaminants, States must adopt their own regulations which are at least as stringent as the Federal regulations. This section of today's proposal describes the regulations and other procedures/policies that States must adopt to implement today's proposed rule. EPA has recently revised its program implementation requirements of 40 CFR part 142, on December 20, 1989 (54 FR 52126), and on June 3, 1991 (56 FR 25046).

To implement today's proposed rule, States will be required to adopt the following regulatory requirements: When they are promulgated: § 141.25, Radionuclide Sampling and Analytical Requirements; § 141.32, General public notice requirements; § 141.44, Special monitoring for radionuclides; and § 141.64, MCLs for Radionuclides.

In addition to adopting drinking water regulations no less stringent than the Federal regulations listed above, EPA is proposing that States adopt certain requirements related to this regulation in order to have their program revision application approved by EPA. In various respects the proposed NPDWRs provide flexibility to the State with regard to implementation of the monitoring requirements by this rule.

Today EPA is also proposing changes to State recordkeeping and reporting requirements. EPA's proposed changes are discussed below. EPA requests comments on these proposed requirements.

1. *Special primacy requirements.* To ensure that the State program includes all the elements necessary for an effective and enforceable program, the State's request for approval must contain the following:

(1) If the State issues waivers, the procedures and/or policies the State will use to conduct and/or evaluate vulnerability assessments;

(2) The procedures/policies the State will use to allow a system to decrease its monitoring frequency; and

(3) A plan that ensures that each system monitors by the end of each compliance period.

2. *State recordkeeping.* The current regulations in § 142.14 require States with primary enforcement responsibility to keep records of analytical results to determine compliance, system inventories, sanitary surveys, State approvals, enforcement actions, and the issuance of variances and exemptions. In this rule, States would be required to keep additional records of the following: (1) Any determination of a system's vulnerability to contamination by beta and photon emitters due to proximity of an emitting source; and (2) any determination that a system can reduce monitoring for gross beta, uranium, radium 226 or 228 or increase monitoring frequency. The records must include the basis for the decision, and the repeat monitoring frequency.

Systems that are located within a 15 mile radius of a nuclear facility, or hospitals or other locations that use, store or dispose of radioactive material should be considered vulnerable to contamination, and therefore, monitored more closely. Systems that are found not to be vulnerable to contamination will be listed as such. This information will be available to EPA for review in a similar manner to current records kept by the State.

3. *State reporting.* EPA currently requires in § 141.15 that States report to EPA information such as violations, variances and exemption status, enforcement actions, etc. EPA proposes in this notice that in addition to the current reporting requirements, States report to EPA:

(1) A list of all systems on which the State conducted a vulnerability assessment, the dates of those assessments, the results of that assessment, and the basis for that determination; and

(2) A list of all systems on which the State is requiring repeat monitoring for Gross beta particle and photon emitters, the results of that assessment, and the basis for that determination.

EPA believes that the State reporting requirements contained in this proposal are necessary to ensure effective oversight of State programs. Public comments on these proposed State reporting requirements are requested. EPA particularly requests comments on whether the proposed reporting requirements are appropriate.

I. Variances and Exemptions

1. *Variances.* Under section 1415(a)(1)(A) of the SDWA, a State which has primary enforcement responsibility (i.e., primacy), or EPA as the primacy agent, may grant variances from MCLs to those public water systems that cannot comply with the MCLs because of characteristics of the water sources that are reasonably available. At the time a variance is granted, the State must prescribe a compliance schedule and may require the system to implement additional control measures. The SDWA requires that variances may only be granted to those systems that have installed BAT (as identified by EPA). However, in limited situations a system may receive a variance if it demonstrates that the BAT would only achieve a *de minimis* reduction in contamination (see § 142.62(c)). Furthermore, before EPA or a State may grant a variance, it must find that the variance will not result in an unreasonable risk to health to the public served by the public water system. The levels representing an unreasonable risk to health for each of the contaminants in this proposal will be addressed in subsequent guidance (see discussion below). In general, the unreasonable risk to health (URTH) level would reflect acute and subchronic toxicity for shorter-term exposures and high carcinogenic risks for long-term exposures (as calculated using the linearized multistage model in accordance with the Agency's risk assessment guidelines; See URTH Guidance, 55 FR 40205, October 2, 1990).

Under section 1413(a)(4), States that choose to issue variances must do so under conditions, and in a manner, which are no less stringent than EPA allows in Section 1415. Of course, a State may adopt standards that are more stringent than the EPA standards. Before a State may issue a variance, it must find that the system is unable to (1) join another water system, or (2) develop another source of water and thus comply fully with all applicable drinking water regulations.

EPA specifies BATs for variance purposes. EPA may identify as BAT different treatments under section 1415 for variances than BAT under section 1412 for MCLs. EPA's section 1415 BAT findings may vary depending on a number of factors, including the number of persons served by the public water systems, physical conditions related to engineering feasibility, and the costs of compliance with MCLs.

*Section 1415 Best Available Technology for Radionuclides.* Table 22 shows the BATs that EPA is proposing for variance purposes under section 1415 for radionuclides. EPA has not proposed coagulation/filtration or lime softening as BAT for small systems (i.e., those systems $\leq$ 500 connections) for the purpose of granting variances because they are not technologically feasible for small systems, as discussed below.

TABLE 22.—PROPOSED BATS FOR VARIANCES UNDER SECTION 1415

| Contaminant | BAT |
|---|---|
| Radon 222 | 1. |
| Radium 226 | 2, 3, 4. |
| Radium 228 | 2, 3, 4. |
| Uranium (N) | 2, 3, 4, 5. |
| Alpha particle emitters | 3. |
| Beta particle and Photon emitters | 3, 6. |

Key to BATs:
1=Aeration: Packed Tower, spray, slat tray and other forms.
2=Ion exchange.
3=Reverse osmosis.
4=Lime softening; except for systems serving ≤500 connections.
5=Coagulation/filtration; except for systems serving ≤500 connections.
6=Mixed bed ion exchange.

Coagulation/filtration and lime softening for radionuclides (i.e., uranium, radium-226 and radium-228) involve a greater degree of complexity than is required for removing conventional contaminants (i.e., turbidity removal). These differences result in increased operating time and level of expertise needed to operate coagulation/filtration and lime softening systems. Specific differences include: (a) Generally higher pH requirements for lime softening removal of radium and specific pH control for coagulation of uranium; (b) higher doses of chemical coagulants or lime for precipitation of radionuclides than for conventional turbidity removal or lime softening, which can complicate treatment operations with respect to chemical supply, and waste by-product (sludge) management; and (c) larger sedimentation basins and possible two-stage processes (one for turbidity softening and one for radionuclides precipitation). Consequently, coagulation/filtration and lime softening treatment are considered too complex in terms of operating time and levels of technical and managerial expertise usually available at small systems.

Costs of installing and operating some of the BATs listed in Table 22 (reverse osmosis and ion exchange) are high for small systems relative to costs for large systems, as shown by EPA estimates in tables 7 through 9. EPA is requesting comment on these technologies as BAT for variance purposes for small systems. EPA is continuing to evaluate what costs are reasonable for public water systems and in this regard, commenters are encouraged to provide a basis for their statements on what should constitute BAT for small systems.

With regard to BAT established under section 1415, EPA is requesting comment on: (1) Whether other technologies should be considered BAT under section 1415 for radionuclides; (2) whether it is appropriate to exclude coagulation/filtration and lime softening for small systems; and (3) the appropriateness of reverse osmosis (RO) and ion exchange as BAT under section 1415 for small systems. EPA notes that RO offers the benefit of multiple contaminant removal and desalting, which makes RO technology especially attractive for some drinking water systems, including small systems. EPA also notes that ion exchange offers the benefit of water softening (i.e., removal of hardness) where hard water conditions prevail.

*Use of POU devices and bottled water.* Under section 1415(a)(1)(A)(ii), the State is to prescribe a schedule for implementation of any additional control measures it may require. The State may require the use of POU devices, bottled water, or other mitigation measures as an "additional control measures" during the period of a variance, as a condition to receiving the variance, if an unreasonable risk to health exists. The use of POU devices and bottled water would not be allowed for radon; only point of entry devices would be allowed for radon.

POU devices fail to treat water for the most significant risk from radon in water, the inhalation risk. EPA also recognizes that the use of POU devices to reduce levels of radon in water could present problems of disposal of the devices when their useful life is over. To prevent potential disposal problems, and to ensure that treatment required under variance provisions reduces risks, EPA is proposing to disallow the use of POU devices for radon for granting variances. Public comment on this proposed disallowance of POU devices to remove radon is requested.

2. *Exemptions.* Under Section 1416(a), EPA or a State may exempt public water systems from any requirements respecting an MCL or treatment technique requirements of an NPDWR, if it finds that (1) due to compelling factors (which may include economic factors), the PWS is unable to comply with the requirement; (2) the exemption will not result in an unreasonable risk to human health; and (3) the PWS was in operation on the effective date of the NPDWR, or for a system which was not in operation by that date, only if no reasonable alternative source of drinking water is available to the new system.

If EPA or a State grants an exemption to a public water system, it must at the same time prescribe a schedule for compliance (including increments of progress) and implementation of appropriate control measures that the State requires the system to meet while the exemption is in effect. Under section 1416(2)(A), the schedule must require compliance within one year after the date of issuance of the exemption. However, section 1416(b)(2)(B) states that EPA or the State may extend the final date for compliance provided in any schedule for a period not to exceed a total of three years, if the public water system is taking all practicable steps to meet the standard and one of the following conditions applies: (1) The system cannot meet the standard without capital improvements which cannot be completed within the period of the exemption; (2) in the case of a system which needs financial assistance for the necessary implementation, the system has entered into an agreement to obtain financial assistance; or (3) the system has entered into an enforceable agreement to become part of a regional public water system. For public water systems which do not serve more than 500 service connections and which need financial assistance for the necessary improvements, EPA or the State may renew an exemption for one or more additional two-year periods if the system establishes that it is taking all practicable steps to meet the requirements noted above. Section 1416(b)(2)(C).

Under section 1416(d), EPA is required to review State-issued exemptions at least every three years and, if the Administrator finds that a State has, in a substantial number of instances, abused its discretion in granting exemptions or failed to prescribe schedules in accordance with the statute after following various procedures, the Administrator may revoke or modify those exemptions and schedules. EPA will use these procedures to strictly scrutinize exemptions from the MCLs granted by States and, if appropriate, will revoke or modify exemptions granted.

As a condition for receiving an exemption, the State may require the use of POU devices or bottled water for the duration of the exemption. The conditions are the same as those referenced in the variance section.

3. *Unreasonable risks to health (URTH).* As a part of the variance and exemption granting process, States must determine whether granting such a variance or exemption will pose an unreasonable risk to the health of the population served. While the granting of variances and exemptions, and the inherent URTH assessment, are State determinations, they occur within the overall context of State primacy and EPA oversight of the State's administration. EPA has therefore

developed guidance to assist States in making URTH determinations (EPA, 1990k), and published a draft of the guidance for public comment. For carcinogens, the draft guidance recommends that URTH be set at the top of EPA's risk range that is generally considered acceptable, $10^{-4}$ lifetime risk. Because EPA is proposing to regulate these contaminants at the most cost-effective level, bounded by $10^{-4}$ risk, the URTH values could be equal to the proposed MCLs, except for adjusted gross alpha and uranium. Adjusted gross alpha is a screening MCL; an URTH should not be considered to exist unless the individual contaminants in the adjusted gross alpha sample exceed a $10^{-4}$ risk. Uranium is being regulated based on its kidney toxicity; URTH guidance would need to be developed for uranium based on this toxic end point.

EPA solicits public comment on this approach to establishing URTH guidance for radionuclides.

## VI. Public Notice Requirements

Under section 1414(c)(1) of the Act, each owner or operator of a public water system must give notice to persons served by it of (1) any violation of any MCL, treatment technique requirement, or testing provision prescribed by an NPDWR; (2) failure to comply with any monitoring requirement under section 1445(a) of the Act; (3) existence of a variance or exemption; and (4) failure to comply with the requirements of a schedule prescribed pursuant to a variance or exemption.

The 1986 amendments required that EPA amend its current public notification regulations to provide for different types and frequencies of notice based on the differences between violations which are intermittent or infrequent and violations which are continuous or frequent, taking into account the seriousness of any potential adverse health effects which may be involved. EPA promulgated regulations to revise the public notification requirements on October 28, 1987 (52 FR 41534). The revised regulations state that violations of an MCL, treatment technique or variance or exemption schedule ("Tier 1 violations") contain health effects language specified by EPA which concisely and in non-technical terms conveys to the public the adverse health effects that may occur as a result of the violation. States and water utilities remain free to add additional information to each notice, as deemed appropriate for specific situations. This proposed rule contains specific health effects language for the contaminants which are in today's proposed rulemaking. EPA believes that the mandatory health effects language is the most appropriate way to inform the affected public of the health implications of violating a particular EPA standard. The proposed mandatory health effects language in § 141.32(e) describes in non-technical terms the health effects associated with the proposed contaminants. Public comment is requested on the proposed language.

## VII. Economic Impacts and Benefits

Executive Order 12291 requires EPA and other regulatory Agencies to perform a Regulatory Impact Analysis (RIA) for all "major" regulations. Major regulations are those which impose a cost of $100 million or more on the national economy, or meet other criteria. EPA has determined that this proposed rule would be a major rule under the Executive Order, and has accordingly prepared an RIA which assesses the costs and benefits of the proposed regulations (EPA, 1991i). This regulation has also been reviewed by the Office of Management and Budget and their comments are available in the public docket.

Table 23 presents a summary of the results of the RIA. Approximately 28,000 public water systems would be required to install treatment or take other actions to comply with the proposed MCLs for these radionuclides. Total national costs would be approximately $310 million per year.

TABLE 23.—NATIONAL COSTS AND BENEFITS OF PROPOSED RADIONUCLIDES MCLS

| | Rn-222 | Ra-226 | Ra-228 | Uranium | AGA (a) | Beta emitters | Total |
|---|---|---|---|---|---|---|---|
| Proposed MCL (b) | 300 | 20 | 20 | 20(c) | 15 | 4(d) | |
| Systems affected | 26,000 | 70 | 40 | 1,500 | 130 | 0 | 28,000 |
| Treatment cost | | | | | | | |
| Total captial ($M) | 1,600 | 190 | 40 | 350 | 230 | 0 | 2,400 |
| Annual O&M ($M) | 70 | 20 | 3 | 30 | 20 | 0 | 150 |
| Total annual cost ($M) | 180 | 30 | 6 | 60 | 40 | 0 | 310 |
| Cancer cases avoided/yr | 80 | 3 | 0.2 | 0.2 | (e) | 0 | 84 |
| Monitoring ($M/Yr) (f) | 5 | 0.003 | 0.89 | 0.003 | 0.64 | 0.25 | 7 |
| State Implementation | | | | | | | |
| Initial ($M) | NA | NA | NA | NA | NA | NA | 15–28 |
| Annual ($M) | NA | NA | NA | NA | NA | NA | 10-19 |
| Annual household cost by system size: | | | | | | | |
| Very Small (25–500) | 120 | 630 | 650 | 580 | 770 | 0 | |
| Small (501–3,300) | 30 | 150 | 150 | 180 | 340 | 0 | |
| Medium (3,301–10,000) | 7 | 90 | 90 | 60 | 200 | 0 | |
| Large (over 10,000) | 5 | 60 | 60 | 40 | 140 | 0 | |

(a) Adjusted gross alpha.
(b) MCLs are expressed in pCi/L unless otherwise noted.
(c) MCL for uranium is expressed in ug/L.
(d) MCL for beta emitters is expressed in mrems ede/year.
(e) Number of cases avoided per year is in the range of 0.2 to 1.4. The low end of the range is based on the risk factor associated with thorium-232; the high end is based on polonium-210 risk. Actual occurrence is likely to be characterized by a mix of several isotopes.
(f) Gross alpha is used as a screen for radium-226 and uranium.
Note: Total may not add due to rounding.

A large proportion of the water systems affected by this regulation would be small systems serving fewer than 500 people. Costs to households vary considerably over the range of system sizes that would be covered by the proposed regulations, with smaller systems having higher costs, because these systems do not benefit from the engineering economies of scale that large systems have. In the smallest of these systems (25 to 100 people), annual residential water bills could increase by $700 to $800 for treatment of radium or uranium. EPA recognizes that these

costs could prove very difficult to afford for small systems. Exemptions may be available through States to provide small systems with additional time to develop financing for water treatment as described in section V.I.2.

*A. Regulatory Flexibility Analysis*

The Regulatory Flexibility Act reguires EPA to consider the effect of regulations on small entities, 5 U.S.C. 602 *et seq.* If there is a significant effect on a substantial number of small entities, the Agency must prepare a Regulatory Flexibility Analysis which describes significant alternatives that would minimize the impact on small entities. An analysis of the impact of the proposed radionuclides rule on small water systems is included in the RIA supporting this rule. The Administrator has determined that the proposed rule, if promulgated, will have a significant effect on a substantial number of small entities.

*B. Paperwork Reduction Act*

The information collection reguirements in this proposed rule have been submitted for approval to the Office of Management and Budget (OMB) under the Paperwork Reduction Act, 44 U.S.C. 3501 *et seq.* An Information Collection Request document has been prepared by EPA (ICR No. 0270) and a copy may be obtained from Sandy Farmer, Information Policy Branch, (PM-223Y), U.S. Environmental Protection Agency, 401 M Street, SW., Washington, DC 20460, or by calling (202) 382-2740.

The total public reporting burden for this collection of information is estimated to be 674,517 hours, with an average of 4.7 hours per response, including time for reviewing instructions, searching existing data sources, gathering and maintaining the data needed, and completing and reviewing the collection of information.

Send comments regarding the burden estimate or any other aspect of this collection of information, including suggestions for reducing this burden, to Chief, Information Policy Branch, (PM-223Y), U.S. Environmental Protection Agency, 401 M Street, SW., Washington, DC 20460; and to the Office of Information and Regulatory Affairs, Office of Management and Budget, Washington, DC 20503, marked "Attention: Desk Officer for EPA". The final rule will respond to any OMB or public comments on the information collection requirements contained in this proposal.

## VIII. References


132 Cong. Rec. S6287, 6294 (May 21, 1986).

Agency for Toxic Substances and Disease Registry (ATSDR). Toxicological Profile for Radium. Atlanta, GA: Agency for Toxic Substances and Disease Registry, U.S. Public Health Service. (December 1990). [ATSDR, 1990]

American Public Health Association; American Water Works Association; Water Pollution Control Federation. Standard Methods for the Examination of Water and Wastewater, 17th ed., (1989). [APHA, 1989]

American Society for Testing and Materials, 1989 Annual Book of ASTM Standards, Water and Atmospheric Analysis, vol. 11.02, Philadelphia, PA (1989) [ASTM, 1989]

Bean, J.A. et al. Drinking water and cancer incidence in Iowa. II. Radioactivity in drinking water. Am. J. Epidemiol. 11;6:924-932 (1982). [Bean et. al., 1982]

Brandom, W.F. et al. Chromosome aberrations as a biological dose-response indicator of radiation exposure in uranium miners. Radiat. Res. 76:159-171 (1978). [Brandom, 1978]

*Brock* v. *Pierce County*, 476 U.S. 253 (1986)

Correia, J.A. et al. The kinetics of ingested Rn-222 in humans determined from measurements with Xe-133. MA General Hospital, Boston, MA, unpublished report. (August 1987). [Correia, et al., 1987]

Correia, J.A. et al. The kinetics of ingested Radon 222 in humans determined from measurements with Xe-133. Project Summary. PB 88-145297/AS (1988). [Correia et al., 1988]

Crawford-Brown, D.J. A Calculation of Organ Burdens, Doses and Health Risks from Rn-222 Ingested in Water (Draft) (Feb. 11, 1990). [Crawford-Brown 1990].

Crawford-Brown, D.J. Cancer Fatalities from Waterborne Radon (Rn-222). Risk Analysis, Vol. 11, No. 1, 135-143, (1991). [Crawford-Brown, 1991]

Domingo, J.L. et al. The Developmental toxicity of uranium in mice. Toxicology 55:143-152. (1989). [Domingo et al., 1989a]

Domingo, J.L. et al. Evaluation of the perinatal and postnatal effects of uranium in mice upon oral administration. Arch. Environ. Health (1989) 44:395. [Domingo et al., 1989b]

Dunning, D.E. et al. A Combined Methodology for Estimating Dose Rates and Health Effects from Exposure to Radioactive Pollutants (draft). Prepared under Interagency Agreement EPA-78-D-X0231 by Oak Ridge National Laboratory (December 1980). [Dunning et al., 1980]

Dunning, D.E. et al. An Assessment of Health Risk From Radiation Exposures. Health Physics 46:1035-1051. [Dunning et al., 1984]

Dupree, E.A. et al. Mortality among workers at a uranium processing facility, the Linde Air Products Company Ceramics Plant, 1943-1949. Scand. J. Work Environ. Health Vol. 13:100-107 (1987). [Dupree et al., 1987]

Ershow, A.G. and Cantor, K.P. Total water and tapwater intake in the United States: Population-based estimates of quantities and sources. Report prepared under National Cancer Institute Order #263-MD-810264. (1989). [Ershow and Cantor, 1989]

Evans, R.D. et al. Radium metabolism in rats and the production of osteogenic sarcoma by experimental radium poisoning. Am. J. Roetgenol. Radium Therapy. 52:353-373 (1944). [Evans et al., 1944]

**Federal Register.** Vol. 40 No. 159. National Interim Primary Drinking Water Regulations; Final Rule. (Aug. 14, 1975) pp. 34324-34328 [40 FR 34324, Aug. 14, 1975]

**Federal Register.** Vol. 41 No. 133. National Interim Primary Drinking Water Regulations; Final Rule. (July 9, 1976), pp. 28402-28409. [41 FR 28402, July 9, 1976]

**Federal Register.** Vol. 50, No. 219. National Primary Drinking Water Regulations; Volatile Organic Chemicals; Proposed Rule (Nov. 13, 1985), 46902-46932. [50 FR 46902, Nov. 13, 1985]

**Federal Register.** Vol. 50, No. 219. National Primary Drinking Water Regulations; Synthetic Organic Chemicals, Inorganic Chemicals and Microorganisms, Evaluation of Health Effects and Determination of RMCLs; Proposed Rule (Nov. 13, 1985), 46936-47025. [50 FR 46936, Nov. 13 1985]

**Federal Register.** Vol. 51, No. 185. Guidelines for Carcinogenic Risk Assessment; Final Rule (September 24, 1986), 33992-34003. [51 FR 33992, September 24, 1986]

**Federal Register.** Vol. 51, No. 185. Guidelines for Estimating Exposures; Notices (September 24, 1986), 34042-34055. [51 FR 34042, September 24, 1986]

**Federal Register.** Vol. 51, No. 189. Water Pollution Control; National Primary Drinking Water Regulations; Radionuclides; Advance Notice of Proposed Rulemaking. (Sept. 30, 1986), 34836-34862. [51 FR 34836 Sept. 30, 1986]

**Federal Register.** Vol. 52, No. 130. National Primary Drinking Water Regulations for Synthetic Organic Chemicals; Monitoring for Unregulated Chemicals. (July 8, 1987), pp. 25690-25717. [52 FR 25690, July 8, 1987]

**Federal Register.** Vol. 52, No. 208. Drinking Water Regulations; Public Notification. (Oct. 28, 1987), pp. 41534-41550. [52 FR 41534, October 28, 1987]

**Federal Register.** Vol. 52, No. 212. Drinking Water; National Primary Drinking Water Regulation; Total Coliforms; Proposed Rule. (Nov. 3, 1987), pp. 42224-42245. [52 FR 42224, Nov. 3, 1987]

**Federal Register.** Vol. 54, No. 43. National Emission Standards for Hazardous Air Pollutants; Regulation of Radionuclides; Proposed Rule. (March 7, 1989), pp. 9612-9668. [54 FR 9612, Mar. 7, 1989]

**Federal Register.** Vol. 54, No. 97. National Primary and Secondary Drinking Water Regulations; Proposed Rule. (May 22, 1989), pp 22062-22160. [54 FR 22062, May 22, 1989]

**Federal Register.** Vol. 54, No. 177. National Emission Standards for Hazardous Air Pollutants; Benzene; Rule and Proposed Rule. (September 14, 1989), pp. 38044–38190. [54 FR 38044, Sept. 14, 1989]

**Federal Register.** Vol. 54, No. 240. National Emission Standards for Hazardous Air Pollutants; Radionuclides; Final Rule and Notice of Reconsideration. (December 15, 1989), 51654. [54 FR 51654, Dec. 15, 1989]

**Federal Register.** Vol 54, No. 243. National Primary Drinking Water Regulations Implementation; Primary Enforcement Responsibility; Final Rule. (December 20, 1989), pp. 52126-52140. [54 FR 52126, Dec. 20, 1989]

**Federal Register.** Vol. 55, No. 191. Variances and Exemptions for Primary Drinking Water Regulations; Unreasonable Risk to Health Guidance. Notice of Availability. (Oct. 2, 1990). p. 40205 [55 FR 40205, Oct. 2, 1990]

**Federal Register.** Vol. 56, No. 20. National Primary Drinking Water Regulations—Synthetic Organic Chemicals and Inorganic Chemicals; Final Rule (January 30, 1991), pp. 3526–3597. [56 FR 3526, Jan. 30, 1991]

**Federal Register.** Vol. 56, No. 106. National Primary Drinking Water Regulations Implementation Primary Enforcement Responsibility; Final Rule (June 3, 1991). pp. 25046–25050. [56 FR 25046]

Finkel, M.P. Relative biological effectiveness of radium and other alpha emitters in CF No. 1 female mice. Proc. Soc. Exp. Biol. Med. 83:494–498. (1953). [Finkel, 1953]

Finkel, M.P. et al. Toxicity of radium-226 in mice. In: Erickson A, ed. Radiation induced cancer. Vienna, Austria: International Atomic Energy Agency, pp. 369–391, (1969). [Finkel et al., 1969]

H.R. Rep., No. 93–1185, in Legislative History of the SDWA, 97 Cong. 2d Sess., p. 549–550, 1982

Haven, F.L. and Hodge, H.C. Toxicity following the parenteral administration of certain soluble uranium compounds. In: Voegtlin, C. and Hodge, H.C. eds. Pharmacology and Toxicology of Uranium Compounds. National Nuclear Energy Series, Div. VI, Vol. 1. New York: McGraw-Hill, pp. 281–308, (1949). [Haven and Hodge, 1949]

Hess, C.T. et al. The Occurrence of Radioactivity in Public Water Supplies in the United States. Health Physics. Vol. 48 No. 5. (May 1985). [Hess et al., 1985].

Hess, C.T. et al. Radon Transferred from Drinking Water into House Air. Prepared for Health Effects Research Division, Cincinnati, OH (January 1991). [Hess et. al., 1991]

Hess, C.T. and Brown, W.L. The Measurement of the Biotransfer and Time Constant of Radon from Ingested Water by Human Breath Analysis. Prepared under EPA Assistance Agreement CR–815156–01–0 for Health Effects Research Division, Cincinnati, OH (January 1991). [Hess and Brown, 1991]

Hodge, H.C. A History of Uranium Poisoning (1824–1942). In: Hodge, H.C., Stannard, J.N., Hursh, J.B., eds. Uranium, Plutonium, Transplutonic Elements: Handbook of Experimental Pharmacology XXXVI (1973), pp. 6–67. New York: Springer-Verlag. [Hodge, 1973]

Howland J.W. Studies on human exposures to uranium compounds. In: Voegtlin C., Hodge H.C. eds. Pharmacology and Toxicology of Uranium Compounds. National Nuclear Energy Series, Div. VI, Vol. 1. New York: McGraw Hill. (1949). [Howland, 1949]

Humphreys et al., The induction by Ra–224 of myeloid leukemia and osteosarcoma in male CBA mice. Int. J. Radiat. Biol. 47:239–247 (1985). [Humphreys et al., 1985].

International Commission on Radiological Protection (ICRP). Report of the Task Group on Reference Man. ICRP Publication 23. Oxford: Pergamon Press (1975). [ICRP, 1975]

International Commission on Radiological Protection (ICRP). Recommendations of the International Commission on Radiological Protection. ICRP Publication 26. Oxford: Pergamon Press (1977). [ICRP, 1977]

International Commission on Radiological Protection (ICRP). Limits for Intake of Radionuclides by Workers. ICRP Publication 30, Part 1. Annals of the ICRP Vol. 2. (3/4) Oxford: Pergamon Press (1979). [ICRP, 1979]

International Commission on Radiological Protection (ICRP). Limits for Intakes of Radionuclides by Workers ICRP Publication 30. Part 2. Annals of the ICRP Vol. 4 (3/4) Oxford: Pergamon Press (1980). [ICRP, 1980]

International Commission on Radiological Protection (ICRP). Limits for Intakes of radionuclides by workers. ICRP Publication 30. Part 3. Annals of the ICRP Vol. 6 (2/3) Oxford: Pergamon Press (1981). [ICRP, 1981]

International Commission on Radiological Protection (ICRP) Lung Cancer Risk From Indoor Exposure to Radon Daughters. ICRP Publication 50. Oxford: Pergamon Press. (1987). [ICRP, 1987]

Keane, A.T. et al. Non-stochastic effects of Ra-226 and Ra-228 in the human skeleton. In: Biological effects of low-level radiation. Vienna, Austria: International Atomic Energy Agency. 329–350. (1983). [Keane et al., 1983]

Kinner et al., Radon Removal Techniques for Small Community Public Water Supplies. Prepared under cooperative agreement no. CR 812602–01–0 for Risk Reduction Engineering Laboratory, Office of Research and Development. Cincinnati, OH (June 1989). [Kinner et. al., 1989]

Kinner et al. Radon Removal Using Point-Of-Entry Water Treatment Techniques. Prepared under cooperative agreement no. CR 812602–01–0 for Risk Reduction Engineering Laboratory, Office of Research and Development. Cincinnati, OH (June 1990). [Kinner et. al., 1990]

Kinner, N.E. Memorandum to Greg Helms, ODW from Nancy Kinner. Variability in Radon Occurrence Data (July 3, 1990). [Kinner, 1990]

Leggett, R.W. The Behavior and Chemical Toxicity of U in the Kidney: A Reassessment. Health Physics, Vol. 57, No. 3, 365–383. September, 1989. [Leggett, 1989]

Lowry, 1991. Measuring Low Radon Levels in Drinking Water Supplies. JAWWA April 1991, pp. 149–153 [Lowry, 1991]

Lyman, G.H. et al. Association of leukemia with radium groundwater contamination. JAMA 254:621–626 (1985). [Lyman et al., 1985]

Lyman, G.H., and Lyman, C.G. Leukemia and groundwater contamination [letter]. JAMA 256:2676–2677 (1986). [Lyman and Lyman, 1986]

Maletskos, C.J. et al. The metabolism of intravenously administered radium and thorium in human beings and the relative absorption from the human gastrointestinal tract of radium and thorium in simulated radium dial paints. In: Radium and mesothorium poisoning and dosimetry and instrumentation techniques in applied radioactivity. Cambridge, MA: MIT Physics Department. 202–317. (1966). [Maletskos et al., 1966]

Maletskos, C.J. et al. Retention and absorption of Ra-224 and Th-234 and some dosimetric consideration of Ra-224 in human beings. In: Mays, C.E. et al. eds. Delayed effects of bone-seeking radionuclides. Salt Lake City, UT: University of Utah Press. 29–49. (1969). [Maletskos et al., 1969]

Maynard, E.A. and Hodge, H.C. Study of toxicity of various uranium compounds when fed to experiment animals. In: Voegtlin C., Hodge H.C. eds. Pharmacology and Toxicology of Uranium Compounds. National Nuclear Energy Series, Div. VI, Vol. 1. pp. 309–376. New York: McGraw Hill. (1949).

Maynard and Hodge, 1949] Maynard, E.A. et al. Oral toxicity of uranium compounds. In: Voegtlin C., Hodge H.C. eds. Pharmacology and Toxicology of Uranium Compounds. National Nuclear Energy Series, Div. VI, Vol. 1. New York: McGraw Hill. (1953), pp. 1221–1369. [Maynard et al., 1953]

Mays, C.W. and Speiss, H. Bone sarcomas in patients given radium-224. In: Boice, J.D., Fraumeni, J.F. eds. Radiation carcinogenesis; epidemiology and biological significance. New York: Raven Press. 241–252 (1984). [Hays and Spiess, 1984]

Mays, C.W. et al. Cancer Risk from the Lifetime Intake of Ra and U Isotopes. Health Physics Vol. 48 No. 5 (May 1985). [Mays et al., 1985]

Moeller, D.W. and Underhill, D.W. Final report on the study of the effects of building materials on population dose equivalent. School of Public Health, Harvard University. (1976). [Moeller and Underhill, 1976]

*Motor Vehicles Manufacturers Assn.* v. *State Farm Mutual Automobile Insurance Co.*, 463 U.S. 29, 42 (1983).

Muller J. et al. Early induction of leukemia (malignant lymphoma) in mice by protracted low alpha-doses. Health Physics (1988) 54:461–463. [Muller et al., 1988]

National Academy of Sciences. National Research Council. The Effects on Populations of Exposure to Low Levels of Ionizing Radiation (BEIR III) (1980). [NAS, 1980]

National Academy of Sciences. National Research Council. Health Risks of Radon and Other Internally Deposited Alpha-Emitters (BEIR IV) (1988). [NAS, 1988]

National Academy of Sciences. National Research Council. Health Effects of Exposure to Low Levels of Ionizing Radiation (BEIR V) (1990). [NAS, 1990]

National Academy of Sciences. National Research Council. Comparative Dosimetry of Radon in Mines and Homes. (1991). [NAS, 1991]

National Council on Radiation Protection and Measurements (NCRP). Radiological assessment: Predicting the transport, bioaccumulation and uptake by man of radionuclides released to the environment. NCRP Report No. 76. Bethesda, MD. (1984). [NCRP, 1984a]

National Council on Radiation Protection and Measurements (NCRP). Exposures from the Uranium Series With Emphasis on Radon and Its Daughters. NCRP Report, No. 77. Bethesda, MD (1984). [NCRP, 1984b]

National Institute for Occupational Safety and Health (NIOSH). Radon progeny in underground mines. Publication No. 88–101. (1987). [NIOSH, 1987]

National Radiological Protection Board (NRPB). Health Effects Models Developed from the 1988 UNSCEAR Report. Chilton, Didcot, Oxfordshire, UK. (1988) [NRPB, 1988]

Nero, A.V.; Schwehr, M.B.; Nazaroff, K.L. et al. Distribution of Airborne Radon 222 Concentration in U.S. Homes. Vol. 234 Science (1986). [Nero et al., 1986]

New Jersey State Department of Environmental Protection—Division of Environmental Quality—Bureau of Radiation and Inorganic Analytical Services. Determination of Radium 228 in Drinking Water (August, 1990). [NJ DEQ, 1990]

New York State Department of Health. Determination of Radium 226 and Radium 228 (Ra-02), Radiological Sciences Institute Center for Research. (June, 1982). [NY State DOH, 1982]

Norris, W.P. et al. Studies of the metabolism of radium in man. Am. J. Roentg. Rad. Therapy Nuclear Med. 73:785–802 (1955). [Norris et al., 1955]

*Northern Plains Resources Council* v. *EPA*, 645 F. 2d 1349 (9 Circ. 1981).

Oakley, D.T. Natural radiation exposure in the United States. ORP/SID 72-1 (1972). [Oakley, 1972]

Paternian, J.L. et al. The Effects of Uranium on Reproduction, Gestation, and Postnatal Survival in Mice. Ecotoxicol. Environ. Safety 17: 291–296. (1989). [Paternian et al., 1989]

Petersen, N.J. et al. An epidemiologic approach to low-level radium-226 exposure. Public Health Rep. 81:805–814 (1966). [Petersen et al., 1966]

Raabe, O.G., et al. Dose-response relationships for bone tumors in beagles exposed to Ra-226 and Sr-90. Health Phys. (1981), 40:863–880. [Raabe et al., 1981]

Radiation Effects Research Foundation (RERF). Life Span Study Report 11, Part 1. Comparison of Risk Coefficients for Site-Specific Cancer Mortality Based on the DS86 and T65DR Shielded Kerma and Organ Doses. (November, 1987). RERF TR 12–87 [RERF, 1987]

Radioactivity in Drinking Water. Proceedings of the National Workshop on Radioactivity in Drinking Water, held May 24–26, 1983 at the Tidewater Inn, Easton, MD, published as a special issue of Health Physics, Vol. 48, No. 5, (May, 1985) 535–693. [Health Physics, 1985]

Rowland et al. Dose-response relationships for female radium dial workers. Radiation Research. Vol. 76 (1978), 368–383. [Rowland et al., 1978]

Rundo, J. et al. Current (1984) status of the study of Ra-226 and Ra-228 in humans at the Center for Human Radiobiology. In: Gossner W., Gerber G.B., Hagen U., Luz A., eds. The Radiobiology of Radium and Thorotrast. Baltimore: Urban and Schwarzenberg, Baltimore (1986). pp. 14–21. [Rundo et al., 1986]

Schlenker, R.A. Risk estimates for bone,. In: Critical issues in setting radiation dose limits. Proceedings No.3, Bethesda, MD: National Council on Radiation Protection and Measurements. (1982), pp. 153–163. [Schlenker, 1982]

Schliekelman, R.J. Determination of Radium Removal Efficiencies in Iowa Water Supply Treatment Processes. EPA–ORP/TAD–76–1 (June 1976). [Schliekelman, 1976]

Science Advisory Board, Radiation Advisory Committee. Review of ODW's Criteria Documents and Related Reports for Uranium, Radium, Radon, and Manmade Beta-Gamma Emitters (Draft). October 13, 1990. [SAB/RAC, 1990]

Sevc,, J. et al. Cancer in man after exposure to Rn daughters. Health Physics 54:27–46 (1988). [Sevc et al., 1988]

Sharpe, W.D. Chronic radium intoxication: Clinical and autopsy findings in long-term New Jersey survivors. Environ. Res. 8:243–383 (1974). [Sharpe, 1974]

Sorg, T.J. et al. Removal of Radium-226 from Sarasota County, Florida Drinking Water by Reverse Osmosis. JAWWA (April 1980), 230–237. [Sorg et al., 1980]

Sorg, T.J. Methods for Removing Uranium from Drinking Water. JAWWA (July 1988), Vol. 80, No.7, pp. 105–111. [Sorg, 1988]

Stebbings, J.H., et al. Mortality from cancers of major sites in female radium dial workers. Am. J. Ind. Med. Vol. 5 (1984) 435–459. [Stebbings et al., 1984]

Sullivan, R.E. et al. Estimates of Health Risk from Exposure to Radioactive Pollutants (draft). Prepared under Interagency Agreement 40–1073–80 by Oak Ridge National Laboratory (November, 1981). ORNL/TM-7745 [Sullivan et al., 1981]

Taylor, G.N. et al. Radium induced eye melanomas in dogs. Radiat. Res. 51:361–373. (1972). [Taylor et al., 1972]

U.S. Department of Energy (DOE). Radon Inhalation studies in animals. U.S. Department of Energy. Washington, DC DOE/ER-0396 (1988). [DOE, 1988]

U.S. Department of Energy (DOE), Environmental Measurements Laboratory. EML Procedures Manual, 27th edition, (November 1990). [DOE, 1990]

U.S. Environmental Protection Agency. Interim Radiological Methodology for Drinking Water. EPA–600/4–75–008, (March, 1976). [EPA, 1976]

U.S. Environmental Protection Agency. Memorandum, Hawkins to Regional Administrators, I–X, RE: Guidance for Determining BACT under SPD. January 4, 1979. [EPA, 1979a]

U.S. Environmental Protection Agency. Radiochemical Analytical Procedures for Analysis of Environmental Samples. EMSL–LV–0539–17. (March, 1979). [EPA, 1979b]

U.S. Environmental Protection Agency. Prescribed Procedures for Measurement of Radioactivity in Drinking Water. Environmental Monitoring and Support Laboratory, Cincinnati, OH. EPA–600/4–80–032, August, 1980. [EPA, 1980]

U.S. Environmental Protection Agency and U.S. Department of Energy, Oak Ridge National Laboratory. Uranium in U.S. Surface, Ground, and Domestic Waters, Vol. 1 (1981) EPA–570/9–81–001 and ORNL/EIS-192, p.8. [EPA/ORNL, 1981]

U.S. Environmental Protection Agency. Determination of Lead-210 in Drinking Water: Method 909. Velten, R.J., and Jacobs, B.J., Environmental Monitoring and Support Laboratory. (March 1982) [EPA, 1982]

U.S. Environmental Protection Agency, Office of Radiation Programs. Eastern Environmental Radiation Facility Radiochemistry Procedures Manual. Eastern Environmental Radiation Facility, Montgomery, AL. EPA 520/5–84–006, August, 1984. [EPA, 1984a]

U.S. Environmental Protection Agency. Technologies and Costs for the Removal of Radium from Potable Water Supplies. Prepared by V.J. Ciccone and Associates. (July 31, 1984). [EPA, 1984b]

U.S. Environmental Protection Agency. Nationwide Occurrence of Radon and Other Natural Radioactivity in Public Water Supplies (The Nationwide Radon Survey). Eastern Environmental Radiation Facility, Montgomery, AL, EPA 520/5–85–008, (October 1985). [EPA, 1985a]

U.S. Environmental Protection Agency. Technologies and Costs for the Removal of Uranium from Potable Water Supplies (Revised Final Draft). Prepared by V.J. Ciccone and Associates (Oct., 30, 1985). [EPA, 1985b]

U.S. Environmental Protection Agency. Test Procedure for Gross Alpha Particle Activity in Drinking Water. J.O. 70.12. (December, 1985). [EPA, 1985c]

U.S. Environmental Protection Agency. Project Summary: Barium and Radium in Water Treatment Plant Wastes. Prepared by V.J. Snoeyink et al. for EPA Water Engineering Research Laboratory, Cincinnati OH (March 1985). [EPA, l985d]

U.S. Environmental Protection Agency. Statistical Analyses of Analytical Methods for Radionuclides in Drinking Water (Final Report). Prepared by Research Planning Institute, Columbia, SC (May, 1986) for ODW under Assignment No. 041422. [EPA, 1986a]

U.S. Environmental Protection Agency. Technologies and Costs for the Removal of Man-Made Radionuclides from Potable Water Supplies (Revised Final Draft). Prepared by V.J. Ciccone & Assoc. (March 10, 1986). [EPA, 1986b]

U.S. Environmental Protection Agency. Supplement to Technologies and Costs for the Removal of Uranium from Potable Water Supplies (Draft). Prepared by Malcolm Pirnie, Inc. (December 30, 1986). [EPA, 1986c]

U.S. Environmental Protection Agency. Technologies and Costs for the Treatment and Disposal of Waste Byproducts from Water Treatments for the Removal of Inorganic and Radioactive Contaminants (Draft). (September 1986). [EPA, 1986d]

U.S. Environmental Protection Agency. Air Quality Criteria Document for Lead, Vol. II, Environmental Criteria and Assessment Office. Research Triangle Park, NC, EPA-600/8-83/028bF (1986). [EPA, 1986e]

U.S. Environmental Protection Agency. A Citizen's Guide to Radon: What It Is and What To Do About It (August 1986). [EPA 1986f]

U.S. Environmental Protection Agency. Analysis of Occurrence, Control and/or Removal of Radionuclides in Small Drinking Water Systems in Virginia. Prepared by V.J. Ciccone and Associates under EPA contract No. 68-01-7088 (September 1987). [EPA, 1987a]

U.S. Environmental Protection Agency. Technologies and Costs for the Removal of Radon from Potable Water Supplies (Fourth Draft). Prepared by Malcolm Pirnie, Inc. (January 6, 1987). [EPA, 1987b]

U.S. Environmental Protection Agency. Supplement to Technologies and Costs for the Removal of Man-Made Radionuclides from Potable Water Supplies (First Draft). Prepared by Malcolm Pirnie (January 8, 1987). [EPA, 1987c]

U.S. Environmental Protection Agency. Supplement to Technologies and Costs for the Removal of Radium from Potable Water Supplies (First Draft). Prepared by Malcolm Pirnie (January 7, 1987). [EPA, 1987d]

U.S. Environmental Protection Agency. Two Test Procedures for Radon in Drinking Water, Interlaboratory Collaborative Study. EPA/600/2-87/082, (March 1987). [EPA, 1987e]

U.S. Environmental Protection Agency. Project Summary: Removal of Uranium from Drinking Water by Ion Exchange and Chemical Clarification. Prepared by Steven W. Hanson et al. for EPA Water Engineering Research Laboratory, Cincinnati OH (Dec. 1987). [EPA, l987f]

U.S. Environmental Protection Agency. Estimates of Co-Occurrence of Radionuclides in Drinking Water. Prepared by Science Applications International Corporation (August 17, 1988) under contract no. 68-03-3514. [EPA, 1988a].

U.S. Environmental Protection Agency. Memorandum to Arthur Perler, STB from Jon Longtin, WSTB regarding Distribution Tables for the National Inorganics and Radionuclides Survey (NIRS) Results, (February 23, 1988). [EPA, 1988b].

U.S. Environmental Protection Agency. Memorandum to Stephen Clark, ODW from Warren Peters, PAB and Chris Nelson, ORP regarding Preliminary Risk Assessment for Radon Emissions from Drinking Water Treatment Facilities, (June 28, 1988). [EPA, 1988c]

U.S. Environmental Protection Agency. Memorandum to Susan MacMullin and Michael Morton, ODW, from Frank Letkiewicz and Barbara Minkser, Wade Miller Assoc., Inc. regarding Radionuclide Co-Occurrence Analyses (August 12, 1988). [EPA, 1988d].

U.S. Environmental Protection Agency. Aeration Alternatives for Radon Reduction—Addendum to Technologies and Costs for the Removal of Radon from Potable Water Supplies. Prepared by Malcolm Pirnie, Inc. (April 25, 1988). [EPA, 1988e]

U.S. Environmental Protection Agency. Letter to W. Schull, SAB/RAC from L. Thomas, EPA regarding radon risk estimates (November 23, 1988). [EPA, 1988f]

U.S. Environmental Protection Agency. Project Summary: A Study of Possible Economical Ways of Removing Radium from Drinking Water. Prepared by R.L. Valentine et al. for EPA Water Engineering Research Laboratory. Cincinnati, OH (April, 1988). [EPA, 1988g]

U.S. Environmental Protection Agency. Project Summary: Radium Removal for a Small Community Water Supply System. Prepared by Kenneth A. Mangelson for EPA Water Engineering Research Laboratory, Cincinnati OH (Sept. 1988). [EPA, 1988h]

U.S. Environmental Protection Agency. Risk Assessments Methodology. Environmental Impact Statement. NESHAPS for Radionuclides. Background Information Document—Vol. 1. Office of Radiation Programs. EPA/520/1-89-005 (September 1989). [EPA, 1989a]

U.S. Environmental Protection Agency. Memorandum to Greg Helms, ODW from Marc Parrotta, ODW regarding an Analysis of Potential Radon Emissions from Water Treatment Plants using the MINEDOSE Code, (November 22, 1989). [EPA, 1989b]

U.S. Environmental Protection Agency. Occurrence of Man-Made Radionuclides in Public Drinking Water Supplies (Draft). Prepared by Wade Miller Associates, Inc. (November 20, 1989). [EPA, 1989c]

U.S. Environmental Protection Agency. Letter to Greg Helms, ODW from Thomas Banks, Wade Miller Assoc. regarding The Lucas Cell Method of Testing for Radon in Water (November 14, 1989). [EPA, l989d]

U.S. Environmental Protection Agency. Memorandum to G. Helms, ODW from T. Banks, Wade Miller Assoc. regarding liquid scintillation counting, (1989). [EPA, 1989e]

U.S. Environmental Protection Agency. Drinking Water Criteria Document for Uranium. External Review Draft. Prepared by Dynamac Corp. (November 1989). [EPA, l989f]

U.S. Environmental Protection Agency. Memorandum from Margo Oge, Director, Radon Division. "Current ORP Estimate of Annual Radon-Induced Lung Cancer Deaths in the General Population." (August 17, 1989). [EPA, 1989g]

U.S. Environmental Protection Agency. Suggested Guidelines for the Disposal of Drinking Water Treatment Wastes Containing Naturally-Occurring Radionuclides. Office of Drinking Water. (July 1990). [EPA, 1990a]

U.S. Environmental Protection Agency. Manual for the Certification of Laboratories Analyzing Drinking Water. Criteria and Procedures. Quality Assurance. Third Edition. Office of Water, EPA/570/9-90/08 (April 1990). [EPA, l990b].

U.S. Environmental Protection Agency. Memorandum to Joseph Cotruvo, ODW from Jerome Puskin, ORP regarding Human Radon-222 Lifetime Risk Estimates from Ingestion (March 28, 1990). [EPA, 1990c]

U.S. Environmental Protection Agency. Memorandum to Folsom from McFarland regarding cost revisions for radium, radon, and uranium to account for new system level treatment design flows adopted by EPA. (May, 1990). [EPA, 1990d]

U.S. Environmental Protection Agency. Memorandum to Greg Helms, ODW from Neal Nelson, ORP regarding draft Drinking Water Health Criteria Document for Uranium (July 5, 1990). [EPA, 1990e]

U.S. Environmental Protection Agency. Occurrence and Exposure Assessment

for Radon in Public Drinking Water Supplies (draft). Prepared by Wade Miller Associates, Inc. (September 25, 1990). [EPA, 1990f]

U.S. Environmental Protection Agency. Occurrence and Exposure Assessment for Radium-226 in Public Drinking Water Supplies (draft). Prepared by Wade Miller Associates, Inc. (April 30, 1990). [EPA, 1990g]

U. S. Environmental Protection Agency. Occurrence and Exposure Assessment for Uranium in Public Drinking Water Supplies (draft). Prepared by Wade Miller Associates, Inc. (April 26, 1990). [EPA, 1990h]

U.S. Environmental Protection Agency. "Estimation of Risks from Indoor Radon Exposures" (February 15, 1990). [EPA, 1990i]

U.S. Environmental Protection Agency. Memorandum T. Banks, WMA to G. Helms, February 21, 1990, on Laboratories Conducting Analysis of Radon in Drinking Water. [EPA, 1990j].

U.S. Environmental Protection Agency. "Guidance for Developing Health Criteria for Determining Unreasonable Risks to Health (draft), (1990). [EPA, 1990k]

U.S. Environmental Protection Agency. Quantitative Risk Assessment for Radon in Drinking Water. External Review Draft. Prepared by Dynamac Corp. (May 1990). [EPA, 1990l]

U. S. Environmental Protection Agency. Technical Support Document for the 1990 Citizen's Guide to Radon (Draft; August 16, 1990). [EPA 1990m]

U.S. Environmental Protection Agency. Occurrence and Exposure Assessment for Radium-228 in Public Drinking Water Supplies (draft). Prepared by Wade Miller Associates under contract No. 69-03-3514. (November 30, 1990). [EPA, 1990n]

U.S. Environmental Protection Agency. Memorandum from Elliott, Assistant Administrator and General Counsel to Habicht, Deputy Administrator regarding regulation of radionuclides in drinking water, (July 30, 1990). [EPA, 1990o]

U.S. Environmental Protection Agency. Drinking Water Criteria Document for Gross Alpha Emitters (Draft). Prepared by Clement International Corp. (June 1991). [EPA, 1991a]

U.S. Environmental Protection Agency. Criteria Document for Radium in Drinking Water (Draft). Prepared by Life Systems, Inc. (June 1991). [EPA, 1991b]

U.S. Environmental Protection Agency. Drinking Water Criteria Document for Radon in Drinking Water (Draft). Prepared by Life Systems, Inc. (June 1991). [EPA, 199lc]

U.S. Environmental Protection Agency. Criteria Document for Man-Made Radionuclides in Drinking Water (Draft). Prepared by Clement International Corp. (June 1991). [EPA, 1991d]

U.S. Environmental Protection Agency. Drinking Water Criteria Document for Uranium (Draft). Prepared by Clement International Corp. (June 1991). [EPA, 1991e].

U.S. Environmental Protection Agency. Occurrence and Exposure Document for Gross Alpha Radiation (Draft). Prepared by Wade Miller Associates under contract No. 69-03-3514. (1991). [EPA, 1991f].

U.S. Environmental Protection Agency. Occurrence and Exposure Assessment of Pb-210 in Drinking Water, Food, and Air (Draft)—Addendum to Occurrence of Man-Made Radionuclides in Public Drinking Water Supplies. Prepared by Wade Miller Associates, Inc. (May 20, 1991). [EPA, 1991g]

U.S. Environmental Protection Agency. Radon in Drinking Water: Assessment of Exposure Pathways. Prepared by Life Systems, Inc. (June 1991) [EPA, 1991h].

U.S. Environmental Protection Agency. Regulatory Impact Analysis of Proposed National Primary Drinking Water Regulations for Radionuclides (Draft). Prepared by Wade Miller Associates (June 14, 1991). [EPA, 1991i]

U.S. Environmental Protection Agency. Response To Comments Received on the NPDWRs: Radionuclides in Drinking Water—Advance Notice of Proposed Rulemaking, September 30, 1986. (June 1991). [EPA, 1991j]

U.S. Environmental Protection Agency. Technologies and Costs for the Removal of Alpha Emitters from Potable Water Supplies. Prepared by Malcolm Pirnie, Inc. (Feb., 1991). [EPA, 1991k]

U.S. Environmental Protection Agency. "Proposed Revisions in EPA Estimates of Radon Risks and Associated Uncertainties" (April, 1991). [EPA, 1991l]

U.S. Environmental Protection Agency. Memorandum to G. Helms from I. Deloatch regarding estimated cost of analyses for radionuclides, (March 27, 1991). [EPA, 1991m]

U.S. Environmental Protection Agency. Radiation Research and Methods Validation. Annual Report, FY 1990. EPA 600/X-91/055, (May 1991). [EPA, 1991n]

U.S. Environmental Protection Agency. Occurrence and Exposure Assessment for Uranium in Public Drinking Water Supplies. Revision 2. Prepared by Wade Miller Associates, Inc. (June 13, 1991) [EPA, 1991o]

U.S. Environmental Protection Agency. Health Effects Assessment Summary Tables. Annual FY-1991. OERR 9200.6-303 (91-1) NTIS PB91-921199. [EPA, 1991p]

U.S. Environmental Protection Agency. Method 913—Radon in Drinking Water by Liquid Scintillation. EMSL/LV, (June 1991) [EPA, 1991q]

U.S. Environmental Protection Agency. Memorandum Deloatch to Helms, PQL Assessments for Radionuclides. (June 13, 1991) [EPA, 1991r]

U.S. Environmental Protection Agency. IRIS Print-out for Uranium (soluble salts); Revised 10/1/89. (June 14, 1991) [EPA, 1991s]

U.S. Geological Survey (USGS). Methods for Determination of Radioactive Substances in Water and Fluvial Sediments, Book 5, Chapter A5, in Techniques of Water-Resources Investigations of the USGS. (1989) [USGS, 1989]

United Nations Scientific Committee on the Effect of Atomic Radiation (UNSCEAR). Ionizing Radiation: Sources and Biological Effects. Report to the General Assembly. New York (1982). [UNSCEAR, 1982]

United Nation's Scientific Committee on the Effect of Atomic Radiation (UNSCEAR). Sources, Effects and Risks of Ionizing Radiation. Report to the General Assembly. New York, (1988). [UNSCEAR, 1988]

Vitz, E. Toward a Standard Method for Determining Waterborne Radon. Health Physics, vol 60, No. 6 pp. 817-829 (June 1991). [Vitz, 1991]

Wilkinson, G. Gastric Cancer in New Mexico counties with significant deposits of uranium. Arch. Environ. Health. (1985), 40:307. [Wilkinson, 1985]

Wrenn, M.E. et al. Metabolism of Ingested U and Ra. Health Physics. Vol. 48, No. 5 (1985). [Wrenn et al., 1985]

## Appendix A—Fundamentals of Radioactivity in Drinking Water

To assist commenters, the following section provides a summary of concepts and definitions involving radioactivity. The definitions include those in the Interim Regulations along with several additions, one of which is being considered (i.e., curie) to be added to 40 CFR 141.2.

*Definitions*

(a) *Dose equivalent* means the product of the absorbed dose from ionizing radiation and such factors which account for differences in biological effectiveness due to the type of radiation and its distribution in the body as specified by the International Commission on Radiological Units and Measurements (ICRU).

(b) *Rem* means the unit of dose equivalent from ionizing radiation to the total body or any internal organ or organ system. It is equal to the absorbed dose in rads multiplied by a quality factor (to account for different radiation types). A rem ede (effective dose equivalent) is a dose to organs adjusted for different radiation types and by an organ weighting factor to account for organ sensitivity to the effect of radiation. A "millirem" (mrem) is 1/1,000 of a rem.

(c) *Curie* means a special unit of activity equal to a nuclear transformation rate of $3.7 \times 10^{10}$ disintegrations/second. One picocurie is equal to $10^{-12}$ curies, which is approximately 2 disintegrations per minute.

(d) *Gross alpha particle emission activity* means the total alpha particle radioactivity measured in an aliquot of an evaporated water sample.

(e) *Man-made beta particle and photon emitters* means all radionuclides emitting

beta particles and/or photons that have been produced artificially and do not exist naturally.

(f) *Gross beta particle activity* means the total radioactivity due to beta particle emissions measured in a aliquot of a evaporated water sample.

(g) *Becquerel* (Bq) is a special unit of radioactivity in the international system of units (SI). One Becquerel is equal to one disintegration per second.

(h) *Sievert* (Sv) means the unit of dose equivalent in the international system of units (SI) from ionizing radiation to the total body or any internal organ or organ system. One Sievert equals 100 rem.

(i) *Effective dose equivalent* means the sum of the products of the dose equivalents in individual organs and the organ weighing factor.

(j) *Organ weighting factor* means the ratio of the stochastic risk for that organ to the total risk when the whole body is irradiated uniformly.

(k) *Natural uranium* means uranium with combined uranium-234 plus uranium-235 plus uranium-238 which has a varying isotopic composition but typically is 0.006% uranium-234, 0.7% uranium-235, and 99.27% uranium-238.

(l) *Activity* means the nuclear transformations of a radioactive substance which occur in a specific time interval.

*Fundamentals of Nuclear Structure and Radioactivity*

This section has been included to provide background information for those not familiar with nuclear chemistry. It is written in broad and general terms and some statements may be simplified.

An atom consists of a heavy concentration of mass at the center (the nucleus) surrounded by shells of electrons in different orbits. The primary constituents of the nucleus are neutrons and protons. The neutrons have no net electric charge while the protons have a positive charge. The orbital electrons have a negative charge and in the un-ionized atoms are equal in number to the protons, making the atom neutral in overall charge.

The number of protons in the nucleus determines the chemical element and its atomic number. A given element can have more than one particular number of neutrons. Variation in the number of neutrons does not change the chemical properties (the element is the same) but it can produce considerable change in the stability of the element to radioactive decay. Atoms with the same number of protons but different number of neutrons are called "isotopes." For example, if an atom has 86 protons, it is radon. There are three principal isotopes of radon containing 133, 134 and 136 neutrons. The atomic mass number is the total number of protons and neutrons in the nucleus and this sum is usually used to label isotopes. The three isotopes of radon have atomic masses of 86+133=219, 86+134=220 and 86+136=222. Symbolically these can be written as: Radon-219 Radon-220 Radon-222.

Since the atomic number and the chemical symbol are synonymous, the number of protons is usually omitted in the nomenclature.

These radionuclides decay by emission of alpha and beta particles and gamma rays. An alpha particle, the heaviest nuclear radiation, consists of two protons and two neutrons. (A proton or neutron is about 2,000 times as massive as an electron.) A negative beta particle is an electron emitted from the nucleus as a result of neutron decay. An electron can be "created" and ejected from a nucleus by a neutron decaying into a proton (which remains in the nucleus) and an electron (which is ejected as a beta particle) and also a neutrino. As a result of this process the nucleus has one more proton and thus has become the atom of a different element with atomic number one greater than the parent atom. (There can also be a nuclear transformation in which a proton emits a positive beta particle, or positron, and is transformed into a neutron which remains in the nucleus). A gamma ray is a form of electromagnetic radiation. Other forms of electromagnetic radiation are light, radio waves, infrared radiation, ultraviolet radiation and x-rays.

The process of alpha and beta radioactive decay leads to a different element while gamma ray emission does not. The isotope that decays is called the parent. The resulting isotope (if a different element) is called the progeny. For example, radon-222 decays by emitting an alpha particle to the progeny polonium. This reaction is written:

Radon-222 ⟶ Polonium-218 + helium-4

The atomic numbers (number of protons) for radium, polonium and helium (the alpha particles) are 88, 84 and 2, respectively. Note that the atomic numbers and atomic mass numbers balance on the two sides of this equation. Note that the atomic mass decreased by 4 due to the loss of two neutrons and two protons, and the atomic number decreased by 2 due to the loss of two protons.

Beta decay causes the atomic number to increase by one. Beta decay can be described as a neutron in the nucleus converted to a proton. An example of beta decay is radium-228 which decays to actinium. This reaction is written:

Radium-228 ⟶ Actinium-228 + beta particle

The atomic numbers are 88 for Ra and 89 for Ac (the beta decay described here is the negative kind). The atomic numbers and atomic mass numbers balance in this equation since the atomic number for an electron is −1 and its atomic mass number is zero. Gamma decay changes neither the atomic number nor the element; it only involves a loss of energy.

Not all atoms are equally stable and different isotopes characteristically decay at different rates. The concept of half life is used to quantitatively describe these differences. The half life of an isotope is the time required for one half of the atoms present to decay. Half lives can range from billions of years or more (the half life of uranium-238 is $4.5\times10^{9}$ years) to millionths of a second (the half life of polonium-214 is $164\times10^{-6}$ sec) and even less. For example, the half lives of radon-219 and radon-220 are too short to survive transport through a drinking water distribution system.

Atomic fission occurring in a nuclear reactor can also contribute radioactivity to drinking water, if by-products are released. This process, the source of immense energy, is triggered by adding a neutron to certain nuclei. The phenomenon occurs for heavy nuclei, the classical examples being isotopes of uranium (uranium-235) and plutonium (plutonium-239). When a neutron is added, each of these isotopes breaks into two roughly equal parts. Each of the parts (called fission fragments) is itself a radioactive nucleus and decays through a sequence of isotopes by beta and gamma decay.

Generally units such as mg/l, micrograms/liter or ppm are used to describe the concentrations in drinking water of pollutants, toxic and hazardous substances. However, certain unique properties of radioactive substances limit the utility of these units and alternative units are used to directly compare the health effects of different radionuclides.

Two important concepts are needed to describe radioactivity:

- How many nuclear transformations occur per second.
- How much radiation or how much energy is imparted to tissue (called absorbed dose). Energy is related to the number of particles emitted by the radioisotope, per second, and their energies.

Damage from radionuclides depends on the radiation emitted (alpha, beta or gamma) and not the mass of the radionuclides. Thus it is essential to have a unit that describes the number of radioactive emissions per time period, or activity. The activity is related to the half life: Longer half lives mean lower activity. Historically by definition one gram of radium is said to have 1 curie (1 Ci) of activity. By comparison, 1 gm of uranium-238 has an activity of 0.36 millionth of a curie. One curie is equivalent to $3.7 \times 10^{10}$ disintegrations per second. The International System (SI) unit for activity is the Becquerel (Bq) which is equal to one disintegration/second

The effect of radioactivity depends not only on the activity (decays/time) but on the kind of radiation (alpha, beta or gamma) and its energy. These two properties determine the absorbed dose to tissue when decay occurs internally and the internal organs are the target.

A common unit of absorbed dose is called the rad, and one rad is equivalent to one hundred ergs (metric unit of energy) in one gram of matter (for perspective on the size of an erg, 10 million erg/sec is one watt). In general, these units are quite large and engineering shorthand is used to describe the activities. Shown below are some commonly used prefixes.

| Greek, prefix & abbreviation | Value | Shorthand exponential notation | Description |
|---|---|---|---|
| milli—m | 1/1,000 | $10^{-3}$ | One part per thousand. |
| micro—Greek m | 1/1,000,000 | $10^{-6}$ | One part per million. |
| nano—n | 1,1,000,000,000 | $10^{-9}$ | One part per billion. |
| pico—p | 1/1,000,000,000,000 | $10^{-12}$ | |
| femto—f | 1/1,000,000,000,000,000 | $10^{-15}$ | |
| atto—a | 1/1,000,000,000,000,000,000 | $10^{-18}$ | |

Thus 1 picocurie is a millionth millionth of a curie and is abbreviated 1 pCi. Also 1 millirad (1 mrad) is one thousandth of a rad.

Because of the particle mass and charge, 1 rad deposited in tissue by alpha particles creates a more concentrated biological damage than 1 rad of gamma rays. To compensate for this difference in damage and subsequent effect, a new unit was created—the rem. This is called the dose equivalent. The absorbed dose is measured in rads and the dose equivalent is measured in rems.

The rad and rem are related by a quality factor as follows:

Number of rems=Q times the number of rads

Where Q is the quality factor which has been assigned the following value:

Q=1 for beta particles and all electromagnetic radiations (gamma rays and x-rays)

Q=10 for neutrons from spontaneous fission and for protons

Q=20 for alpha particles and fission fragments

The quality factor is meant to approximately account for the relative harm caused by various types of radiation. The International System (Si) unit corresponding to the rem is the Sievert (Sv). One Sievert equals 100 rem.

## Appendix B—Beta Particle and Photon Emitters

| Nuclide | Ch (pCi/liter) |
|---|---|
| H-3 | 6.09E+04 |
| BE-7 | 4.35E+04 |
| N-13 | 1.52E+05 |
| C-11 | 9.92E+04 |
| C-14 | 3.20E+03 |
| C-15 | 6.69E+06 |
| O-15 | 4.95E+05 |
| F-18 | 3.95E+04 |
| NA-22 | 4.66E+02 |
| NA-24 | 3.35E+03 |
| SI-31 | 1.02E+04 |
| P-32 | 6.41E+02 |
| P-33 | 1.87E+03 |
| S-35 | 1.29E+04 |
| CL-36 | 1.85E+03 |
| CL-38 | 2.12E+04 |
| K-42 | 3.90E+03 |
| CA-45 | 1.73E+03 |
| CA-47 | 8.46E+02 |
| SC-46 | 8.63E+02 |
| SC-47 | 2.44E+03 |
| SC-48 | 7.66E+02 |
| V-48 | 6.44E+02 |
| CR-51 | 3.80E+04 |
| MN-52 | 7.33E+02 |
| MN-54 | 2.01E+03 |
| MN-56 | 5.64E+03 |
| FE-55 | 9.25E+03 |

## Appendix B—Beta Particle and Photon Emitters—Continued

| Nuclide | Ch (pCi/liter) |
|---|---|
| FE-59 | 8.44E+02 |
| CO-57 | 4.87E+03 |
| CO-58 | 1.59E+03 |
| CO-58M | 6.49E+04 |
| CO-60 | 2.18E+02 |
| NI-59 | 2.70E+04 |
| NI-63 | 9.91E+03 |
| NI-65 | 8.81E+03 |
| CU-64 | 1.19E+04 |
| ZN-65 | 3.96E+02 |
| ZN-69 | 6.31E+04 |
| ZN-69M | 4.22E+03 |
| GA-67 | 7.02E+03 |
| GA-72 | 1.19E+03 |
| GE-71 | 4.36E+05 |
| AS-73 | 7.85E+03 |
| AS-74 | 1.41E+03 |
| AS-76 | 1.06E+03 |
| AS-77 | 4.33E+03 |
| SE-75 | 5.74E+02 |
| BR-82 | 3.15E+03 |
| RB-82 | 4.36E+05 |
| RB-86 | 4.85E+02 |
| RB-87 | 5.01E+02 |
| RB-88 | 2.91E+04 |
| RB-89 | 5.27E+04 |
| SR-82 | 2.41E+02 |
| SR-85 | 2.83E+03 |
| SR-85M | 2.37E+05 |
| SR-89 | 5.99E+02 |
| SR-90 | 4.20E+01 |
| SR-91 | 2.16E+03 |
| SR-92 | 3.10E+03 |
| Y-90 | 5.10E+02 |
| Y-91 | 5.76E+02 |
| Y-91M | 1.32E+05 |
| Y-92 | 2.87E+03 |
| Y-93 | 1.20E+03 |
| ZR-93 | 5.09E+03 |
| ZR-95 | 1.46E+03 |
| ZR-97 | 6.50E+02 |
| NB-93M | 1.05E+04 |
| NB-94 | 7.07E+02 |
| NB-95 | 2.15E+03 |
| NB-95M | 2.39E+03 |
| NB-97 | 2.35E+04 |
| NB-97M | 1.37E+06 |
| MO-99 | 1.83E+03 |
| TC-95 | 6.97E+04 |
| TC-95M | 3.12E+03 |
| TC-96 | 2.05E+03 |
| TC-96M | 1.76E+05 |
| TC-97 | 3.25E+04 |
| TC-97M | 4.45E+03 |
| TC-99 | 3.79E+03 |
| TC-99M | 8.96E+04 |
| RU-97 | 7.96E+03 |
| RU-103 | 1.81E+03 |
| RU-105 | 4.99E+03 |
| RU-106 | 2.03E+02 |
| RH-103M | 4.71E+05 |
| RH-105 | 3.72E+03 |
| RH-105M | 5.51E+06 |

## Appendix B—Beta Particle and Photon Emitters—Continued

| Nuclide | Ch (pCi/liter) |
|---|---|
| RH-106 | 1.24E+06 |
| PD-100 | 1.30E+03 |
| PD-101 | 1.34E+04 |
| PD-103 | 6.94E+03 |
| PD-107 | 3.66E+04 |
| PD-109 | 2.12E+03 |
| AG-105 | 2.70E+03 |
| AG-108 | 6.26E+05 |
| AG-108M | 7.23E+02 |
| AG-109M | 1.67E+07 |
| AG-110 | 1.84E+06 |
| AG-110M | 5.12E+02 |
| AG-111 | 1.08E+03 |
| CD-109 | 2.27E+02 |
| CD-115 | 9.58E+02 |
| CD-115M | 3.39E+02 |
| IN-113M | 5.24E+04 |
| IN-114 | 9.76E+05 |
| IN-114M | 3.23E+02 |
| IN-115 | 3.51E+01 |
| IN-115M | 1.64E+04 |
| SN-113 | 1.74E+03 |
| SN-121 | 6.06E+03 |
| SN-121M | 2.26E+03 |
| SN-125 | 4.46E+02 |
| SN-126 | 2.93E+02 |
| SB-122 | 8.10E+02 |
| SB-124 | 5.63E+02 |
| SB-125 | 1.94E+03 |
| SB-126 | 5.44E+02 |
| SB-126M | 5.85E+04 |
| SB-127 | 8.18E+02 |
| SB-129 | 3.09E+03 |
| TE-125M | 1.49E+03 |
| TE-127 | 7.92E+03 |
| TE-127M | 6.63E+02 |
| TE-129 | 2.72E+04 |
| TE-129M | 5.24E+02 |
| TE-131 | 2.68E+04 |
| TE-131M | 9.71E+02 |
| TE-132 | 5.80E+02 |
| I-122 | 2.11E+05 |
| I-123 | 1.07E+04 |
| I-125 | 1.51E+02 |
| I-126 | 8.10E+01 |
| I-129 | 2.10E+01 |
| I-130 | 1.19E+03 |
| I-131 | 1.08E+02 |
| I-132 | 8.19E+03 |
| I-133 | 5.49E+02 |
| I-134 | 2.14E+04 |
| I-135 | 2.34E+03 |
| CS-131 | 2.28E+04 |
| CS-134 | 8.13E+01 |
| CS-134M | 1.01E+05 |
| CS-135 | 7.94E+02 |
| CS-136 | 5.18E+02 |
| CS-137 | 1.19E+02 |
| CS-138 | 2.56E+04 |
| BA-131 | 2.95E+03 |
| BA-133 | 1.52E+03 |
| BA-133M | 2.62E+03 |
| BA-137M | 2.15E+06 |

APPENDIX B—BETA PARTICLE AND PHOTON EMITTERS—Continued

| Nuclide | Ch (pCi/liter) |
|---|---|
| BA-139 | 1.38E+04 |
| BA-140 | 5.82E+02 |
| LA-140 | 6.52E+02 |
| CE-141 | 1.89E+03 |
| CE-143 | 1.21E+03 |
| CE-144 | 2.61E+02 |
| PR-142 | 1.04E+03 |
| PR-143 | 1.17E+03 |
| PR-144 | 4.70E+04 |
| PR-144M | 1.12E+05 |
| ND-147 | 1.25E+03 |
| ND-149 | 1.17E+04 |
| PM-147 | 5.24E+03 |
| PM-148 | 5.05E+02 |
| PM-148M | 5.75E+02 |
| PM-149 | 1.38E+03 |
| SM-151 | 1.41E+04 |
| SM-153 | 1.83E+03 |
| EU-152 | 8.41E+02 |
| EU-154 | 5.73E+02 |
| EU-155 | 3.59E+03 |
| EU-156 | 6.00E+02 |
| GD-153 | 4.68E+03 |
| GD-159 | 2.76E+03 |
| TB-158 | 1.25E+03 |
| TB-160 | 8.15E+02 |
| DY-165 | 1.51E+04 |
| DY-166 | 8.30E+02 |
| HO-166 | 9.81E+02 |
| ER-169 | 3.64E+03 |
| ER-171 | 3.80E+03 |
| TM-170 | 1.03E+03 |
| TM-171 | 1.27E+04 |
| YB-169 | 1.83E+03 |
| YB-175 | 3.11E+03 |
| LU-177 | 2.55E+03 |
| HF-181 | 1.17E+03 |
| TA-182 | 8.42E+02 |
| W-181 | 1.90E+04 |
| W-185 | 3.44E+03 |
| W-187 | 2.66E+03 |
| RE-183 | 5.40E+03 |
| RE-186 | 1.88E+03 |
| RE-187 | 5.82E+05 |
| RE-188 | 1.79E+03 |
| OS-185 | 2.46E+03 |
| OS-191 | 2.38E+03 |
| OS-191M | 1.43E+04 |
| OS-193 | 1.69E+03 |
| IR-190 | 1.01E+03 |
| IR-192 | 9.57E+02 |
| IR-194 | 1.04E+03 |
| PT-191 | 3.81E+03 |
| PT-193 | 4.61E+04 |
| PT-193M | 3.02E+03 |
| PT-197 | 3.40E+03 |
| PT-197M | 1.75E+04 |
| AU-196 | 3.66E+03 |
| AU-198 | 1.31E+03 |
| HG-197 | 5.76E+03 |
| HG-203 | 2.39E+03 |
| TL-202 | 3.84E+03 |
| TL-204 | 1.68E+03 |
| TL-207 | 4.00E+05 |
| TL-208 | 2.83E+05 |
| TL-209 | 3.58E+05 |
| PB-203 | 5.06E+03 |
| PB-209 | 2.53E+04 |
| PB-210 | 1.01E+00 |
| PB-211 | 1.28E+04 |
| PB-212 | 1.23E+02 |
| PB-214 | 1.18E+04 |
| BI-206 | 6.56E+02 |
| BI-207 | 1.01E+03 |
| BI-212 | 5.20E+03 |
| BI-213 | 1.50E+04 |
| BI-214 | 1.89E+04 |
| FR-223 | 3.41E+03 |

APPENDIX B—BETA PARTICLE AND PHOTON EMITTERS—Continued

| Nuclide | Ch (pCi/liter) |
|---|---|
| RA-225 | 9.14E+00 |
| RA-228 | 7.85E+00 |
| AC-227 | 1.27E+00 |
| AC-228 | 3.27E+03 |
| TH-231 | 4.07E+03 |
| TH-234 | 4.01E+02 |
| PA-233 | 1.51E+03 |
| PA-234 | 2.56E+03 |
| PA-234M | 9.30E+05 |
| U-237 | 1.78E+03 |
| U-240 | 1.54E+03 |
| NP-236 | 5.96E+03 |
| NP-238 | 1.39E+03 |
| NP-239 | 1.68E+03 |
| NP-240 | 2.31E+04 |
| NP-240M | 1.74E+05 |
| PU-241 | 6.26E+01 |
| PU-243 | 1.64E+04 |
| AM-242M | 1.27E+00 |

Ch=Concentration in water for 4 mrem ede/y, assuming 2 liters daily intake.

APPENDIX C—ALPHA EMITTERS

| NUCLIDE | Cm (pCi/liter) | Ci (pCi/liter) |
|---|---|---|
| SM-147 | 1.06E+02 | 1.04E+02 |
| BI-210 | 1.94E+03 | 1.01E+03 |
| BI-211 | 2.05E+05 | 1.56E+05 |
| PO-210 | 1.40E+01 | 7.46E+00 |
| PO-212 | 1.15E+14 | 8.78E+13 |
| PO-213 | 8.03E+12 | 6.06E+12 |
| PO-214 | 2.43E+11 | 1.86E+11 |
| PO-215 | 9.17E+09 | 6.84E+09 |
| PO-216 | 7.38E+07 | 5.30E+07 |
| PO-218 | 9.50E+04 | 6.91E+04 |
| AT-217 | 5.74E+08 | 4.27E+08 |
| FR-221 | 4.50E+04 | 3.26E+04 |
| RA-223 | 3.21E+01 | 2.41E+01 |
| RA-224 | 5.46E+01 | 4.06E+01 |
| RA-226 | 2.07E+01 | 1.57E+01 |
| AC-225 | 1.85E+02 | 1.13E+02 |
| TH-227 | 6.62E+02 | 4.03E+02 |
| TH-228 | 1.53E+02 | 1.25E+02 |
| TH-229 | 5.15E+01 | 4.93E+01 |
| TH-230 | 8.27E+01 | 7.92E+01 |
| TH-232 | 9.18E+01 | 8.80E+01 |
| PA-231 | 1.02E+01 | 1.02E+01 |
| U-232 | 1.02E+01 | 5.72E+00 |
| U-233 | 2.56E+01 | 1.38E+01 |
| U-234 | 2.59E+01 | 1.39E+01 |
| U-235 | 2.65E+01 | 1.45E+01 |
| U-236 | 2.74E+01 | 1.47E+01 |
| U-238 | 2.62E+01 | 1.46E+01 |
| NP-237 | 7.19E+00 | 7.06E+00 |
| PU-236 | 3.33E+01 | 3.23E+01 |
| PU-238 | 7.15E+00 | 7.02E+00 |
| PU-239 | 6.49E+01 | 6.21E+01 |
| PU-240 | 6.49E+01 | 6.22E+01 |
| PU-242 | 6.83E+01 | 6.54E+01 |
| PU-244 | 7.02E+00 | 6.87E+00 |
| AM-241 | 6.45E+00 | 6.34E+00 |
| AM-242 | 8.66E+03 | 5.34E+03 |
| AM-243 | 6.49E+00 | 6.37E+00 |
| CM-242 | 1.45E+02 | 1.33E+02 |
| CM-243 | 8.47E+00 | 8.30E+00 |
| CM-244 | 1.00E+01 | 9.84E+00 |
| CM-245 | 6.35E+00 | 6.23E+00 |
| CM-246 | 6.38E+00 | 6.27E+00 |
| CM-247 | 6.93E+00 | 6.79E+00 |
| CM-248 | 1.71E+00 | 1.67E+00 |
| CF-252 | 1.70E+01 | 1.62E+01 |

Cm=Concentration in water for lifetime mortality risk=$1\times10^{-4}$

Ci=Concentration in water for lifetime incidence risk=$1\times10^{-4}$

Both assume 2 liters daily intake of water.

**List of Subjects in 40 CFR Parts 141 and 142**

Chemicals, Reporting and record keeping requirements, Water supply, Administrative practice and procedure.

Dated: June 17, 1991.

**William K. Reilly,**

*Administrator, Environmental Protection Agency.*

For the reasons set forth in the preamble, title 40 of the Code of Federal Regulations is proposed to be amended as follows:

## PART 141—NATIONAL PRIMARY DRINKING WATER REGULATIONS

1. The authority citation for part 141 continues to read as follows:

**Authority:** 42 U.S.C. 300f, 300g-1, 300g-2, 300g-3, 300g-4, 300g-5, 300g-6, 300j-4 and 300j-9.

2. Section 141.2 is amended by adding, in alphabetical order, a definition for "adjusted gross alpha" as follows:

**§ 141.2 Definitions**

* * * * *

*Adjusted gross alpha:* Adjusted gross alpha is defined as the result of a gross alpha measurement, less radium-226 and less uranium. Radon is not included in adjusted gross alpha.

* * * * *

3. Section 141.15 is amended by revising the introductory text to read as follows:

**§ 141.15 Maximum contaminant levels for radium-226, radium-228, and gross alpha particle radioactivity in community water systems.**

The following are the maximum contaminant levels for radium-226, radium-228, and gross alpha particle radioactivity, which shall remain effective until [insert date 18 months after publication of the final rule in the **Federal Register**];

* * * * *

4. Section 141.16 is proposed to be amended by adding introductory text to read as follows:

**§ 141.16 Maximum contaminant levels for beta particle and photon radioactivity from man-made radionuclides in community water systems.**

The following maximum contaminant levels shall remain effective until [insert date 18 months after publication of the final rule in the **Federal Register**];

* * * * *

5. Section 141.25 is amended by revising the section to read as follows:

**§ 141.25 Sampling and analytical methods for radionuclides.**

The current analytical methods outlined in § 141.25 and the monitoring requirements in § 141.26 shall remain effective until [insert date 18 months after promulgation of the final rule]. After that date, the monitoring and analytical methods specified below will be effective. Community water systems and non-transient, non-community water systems shall conduct monitoring to determine compliance with the maximum contaminant levels specified in § 141.64 in accordance with this section.

(a) Monitoring shall be conducted as follows:

(1) Groundwater systems shall take a minimum of one sample at every entry point to the distribution system which is representative of each well after treatment (hereafter called a sampling point) beginning in the compliance period starting January 1, 1996. The system shall take each sample at the same sampling point unless conditions make another sampling point more representative of each source or treatment plant.

(2) Surface water systems shall take a minimum of one sample at every entry point to the distribution system after any application of treatment or in the distribution system at a point which is representative of each source after treatment (hereafter called a sampling point) beginning in the compliance period starting January 1, 1996. The system shall take each sample at the same sampling point unless conditions make another sampling point more representative of each source or treatment plant.

(3) If a system draws water from more than one source and the sources are combined before distribution, the system must sample at an entry point to the distribution system during periods of normal operating conditions (i.e., when water is representative of all sources being used).

(4) The State may reduce the total number of samples which must be analyzed by allowing the use of compositing, except for radon and gross beta samples, which may not be composited.

(i) Composite samples from a maximum of five sampling points within one system are allowed. Compositing of samples must be done in the laboratory.

(ii) If the concentration in the composite sample is greater than or equal to 3 pCi/1 of any radionuclide, the individual non-composited samples, or if these are not available, follow-up samples must be analyzed to identify the sampling points which may violate one of the MCLs. Any follow-up samples must be taken within 14 days at each sampling point included in the composite. Samples must be analyzed for the contaminants which were detected in the composite sample.

(5) The frequency of monitoring for radon shall be in accordance with paragraph (b) of this section; the frequency of monitoring for radium-226, radium-228, uranium, and adjusted gross alpha shall be in accordance with paragraph (c) of this section; and the frequency of monitoring for beta and photon emitters shall be in accordance with paragraph (d) of this section.

(b) The frequency of monitoring conducted to determine compliance with the maximum contaminant level for radon specified in § 141.64 shall be conducted as follows:

(1) Groundwater systems or systems using both ground and surface water are required to take four consecutive quarterly samples during the first year of each three-year compliance period of each nine-year compliance cycle. Annual samples are required in the second and third years of each compliance period. The initial monitoring for radon must be completed by January 1, 1999.

(2) Surface water systems are not required to monitor for radon. The State may require it.

(3) The State may grant a waiver to ground water systems or systems that use both ground and surface water for monitoring requirements in paragraph (b)(1) of this section, provided that they have monitored quarterly in the initial year, and completed annual testing in the second and third year of the first compliance period (at least one sample shall have been taken since January 1, 1990). Groundwater systems shall demonstrate that all previous analytical results were less than the maximum contaminant level. Systems that use a new water source are not eligible for a waiver until 4 quarters of monitoring and two subsequent years of a single annual sample of the new source has been completed.

(4) The State may grant a waiver if the State determines that the system is reliably and consistently below the MCL, based on a consideration of the following factors:

(i) Potential radon contamination of the water source due to the geological characteristics of the area where the water source is located.

(ii) Previous analytical results.

(5) A condition of the waiver shall require that a system take a minimum of 1 sample every three-year compliance period.

(6) A waiver remains in effect until the completion of the nine-year compliance cycle. Systems not receiving a waiver must monitor in accordance with the provisions of paragraph (b)(1) of this section.

(7) A decision by the State to grant a waiver shall be made in writing and shall set forth the basis for the determination. The determination may be initiated by the State or upon an application by the public water system. The public water system shall specify the basis for its request. The State shall review and, where appropriate, revise its determination of appropriate frequency.

(8) A system which exceeds the maximum contaminant level in § 141.64 of this part shall monitor quarterly beginning in the next quarter after the violation occurred. Quarterly monitoring must continue until the average of 4 consecutive quarterly samples is below the MCL.

(9) If monitoring data collected after January 1, 1990 are generally consistent with the requirements of § 141.25, then the State may allow systems to use those data to satisfy the monitoring requirement for the initial compliance period.

(c) The frequency of monitoring conducted to determine compliance with the maximum contaminant levels in § 141.64 for radium-226, radium-228, uranium, and adjusted gross alpha shall be as follows:

(1) Groundwater systems, surface water systems and systems using both ground and surface water shall take one sample annually at each sampling point during each compliance period starting in the compliance period beginning January 1, 1996. If all samples are less than the MCL, then monitoring can be reduced to one sample per compliance period, in accordance with paragraphs (c) (2) through (6) of this section.

(2) Systems may apply to the State for a waiver from the monitoring frequencies specified in paragraph (c)(1) of this section, if they have completed the required three annual samples in the first three-year compliance period. Systems that use a new water source are not eligible for a waiver until three years of monitoring of the new source has been completed.

(3) The State may grant a waiver if it finds that the system is reliably and consistently below the MCL, based on a consideration of the following factors:

(i) Potential contamination of the water source; and

(ii) Previous analytical results.

(4) A condition of the waiver shall require that a system take a minimum of

one sample during the effective period of the waiver. The term during which the waiver is effective shall not exceed one nine-year compliance cycle.

(5) The State may grant a waiver provided water systems have monitored annually for at least three consecutive years. (At least one sample shall have been taken since January 1, 1990.) Both surface and groundwater systems shall demonstrate that all previous analytical results were less than the maximum contaminant level. Systems that use a new water source are not eligible for a waiver until three consecutive annual samples from the new source have been collected and analyzed.

(6) A decision by the State to grant a waiver shall be made in writing and shall set forth the basis for the determination. The determination may be initiated by the State or upon an application by the public water system. The public water system shall specify the basis for its request. The State shall review and, where appropriate, revise its determination of the appropriate monitoring frequency when the system submits new monitoring data or when other data relevant to the system's appropriate monitoring frequency become available.

(7) Systems which exceed the maximum contaminant levels in § 141.64 of this part shall monitor quarterly beginning in the next quarter after the violation occurred. Quarterly monitoring must continue until 4 consecutive quarterly samples are below the MCL.

(8) If monitoring data collected after January 1, 1985 are generally consistent with the requirements of § 141.25, then the State may allow systems to use these data to satisfy the monitoring requirements for the initial compliance period beginning January 1, 1996, except at least one sample shall have been collected since January 1, 1990.

(d) The frequency of monitoring conducted to determine compliance with the maximum contaminant levels in § 141.64 for beta and photon emitters shall be as follows:

(1) Only systems (both surface and ground water) determined by the State to be vulnerable need to sample for beta and photon emitters. Vulnerability shall be based on the proximity of the water source(s) to facilities using or producing radioactive materials. Vulnerable systems shall monitor quarterly for beta and annually for tritium and strontium, beginning in the compliance period starting January 1996. Systems must begin monitoring within one quarter after being notified by the State that the system is vulnerable. Existing vulnerability determinations by the State shall remain effective until the State reviews and either reaffirms them or revises them.

(2) Systems determined to be vulnerable may not apply to the State for a waiver from the monitoring frequencies specified in paragraph (d)(1) of this section.

(3) If the gross beta particle activity exceeds 50 pCi/1, an analysis of the sample must be performed to identify the major radioactive constituents present in the sample and the appropriate doses shall be calculated and summed to determine compliance with § 141.64, using appendix B, [insert citation for final **Federal Register**]. Measured levels of tritium and strontium shall be included in this calculation. Doses shall also be calculated and combined for measured levels of tritium and strontium to determine compliance.

(4) Suppliers of water shall conduct additional monitoring as directed by the State, to determine the concentration of man-made radioactivity in principal watersheds designated by the State.

(5) Vulnerable systems which exceed the maximum contaminant levels in § 141.64 shall monitor monthly beginning in the next month after the violation occurred. Monthly monitoring shall continue until the system has established, by a rolling average of 3 monthly samples, that the MCL is being met.

(e) Confirmation samples:

(1) Where the results of sampling for radon, radium-226, radium-228, adjusted gross alpha, uranium, and beta and photon emitters indicate an exceedence of the maximum contaminant level, the State may require that one additional sample be collected as soon as possible after the initial sample was taken (but not to exceed two weeks) at the same sampling point.

(2) If a State-required confirmation sample is taken for any contaminant, then the results of the initial and confirmation sample shall be averaged. The resulting average shall be used to determine the system's compliance in accordance with paragraph (h) of this section. States have the discretion to delete results of obvious sampling or analytic errors.

(f) The State may require more frequent monitoring than specified in paragraphs (b), (c), and (d) of this section or may require confirmation samples for positive and negative results at its discretion.

(g) Systems may apply to the State to conduct more frequent monitoring than the minimum monitoring frequencies specified in this section.

(h) Compliance with §§ 141.15, 141.16, and 141.64 (as appropriate) shall be determined based on the analytical result(s) obtained at each sampling point.

(1) For systems which are conducting monitoring at a frequency greater than annual, compliance with the maximum contaminant levels for radon, radium-226, radium-228, adjusted gross alpha, uranium, and beta and photon emitters is determined by a running annual average at each sampling point. If the average at any sampling point is greater than the MCL, then the system is out of compliance. If any one sample would cause the annual average to be exceeded, then the system is out of compliance immediately. Any sample below the detection limit shall be calculated at one-half the detection limit for the purpose of determining the annual average.

(2) For systems which are monitoring annually, or less frequently, the system is out of compliance with the maximum contaminant levels for radon, radium-226, radium-228, adjusted gross alpha, uranium, and beta and photon emitters if the level of a contaminant at any sampling point is greater than the MCL. If a confirmation sample is required by the State, the determination of compliance will be based on the average of the two samples.

(3) If a public water system has a distribution system separable from other parts of the distribution system with no interconnections, only those parts of the system that exceed the MCL need to conduct increased monitoring.

(4) If a public water system has a distribution system separable from other parts of the distribution system with no interconnections, the State may allow the system to give public notice to only the area served by that portion of the system which is out of compliance.

(i) Each public water system shall monitor at the time designated by the State during each compliance period.

(j) Radionuclides analysis:

(1) Analysis for radon, radium-226, radium-228, adjusted gross alpha, uranium, and beta and photon emitters shall be conducted using the following methods:

PROPOSED METHODOLOGY FOR RADIONUCLIDE CONTAMINANTS

| Contaminant | Methodology | Reference (method or page number) | | | | | | | | |
|---|---|---|---|---|---|---|---|---|---|---|
| | | EPA [1] | EPA [2] | EPA [3] | EPA [4] | SM [5] | ASTM [6] | USGS [7] | DOE [8] | Other |
| **Naturally occurring** | | | | | | | | | | |
| Gross alpha and beta. | Evaporation | 900.0 | pp. 1-3 | 00-01 | p. 1 | 7110 B | D 1943-81 | R-1120-76 | | |
| Gross alpha | Co-precipitation | | | 00-02 | | | | | | |
| Radium 226 | Radon emanation. | 903.1 | pp. 16-23 | Ra-03 | p. 19 | 7500-Ra B | D 3454-86 | R-1141-76 | | N.Y.[9] |
| | Radiochemical | 903.0 | | Ra-05 | | | | | | |
| Radium 228 | Radiochemical | 904.0 | pp. 24-28 | Ra-05 | p. 19 | 7500-Ra D* | | R-1142-76 | | N.Y.[9] N.J.[10] |
| Radon 222 | Liquid scintillation. | | | | | | | | | 913 [11] LS [12] |
| | Lucas cell | | | | | | | | | LC [12] |
| Uranium | Radiochemical | 908.0 | | | | 7500-U B | D 3972-82 | | | |
| | Fluorometric | 908.1 | | | | 7500-U C | D 2907-83 | R-1180-76 R-1181-76 | E-U-03 | |
| | Alpha spectrometry. | | | 00-07 | p. 33 | | | R-1182-76 | E-U-04 | |
| **Man-made** | | | | | | | | | | |
| Radioactive cesium. | Precipitation | 901.0 | pp. 4-5 | | | 7500-Cs B | | R-1110-87 | E-Cs-01 | |
| Radioactive iodine. | Precipitation | 902.0 | | I-01 | | 7500-I B | D 2334-88 | | | |
| Radioactive strontium 89, 90. | Precipitation | 905.0 | pp. 29-33 | | p. 65 | 7500-Sr B | | R-1160-76 | | |
| | Radiochemical | | pp. 108-114 | Sr-04 | | | | | E-Sr-01 | |
| Tritium | Liquid scintillation. | 906.0 | pp. 34-40 | H-02 | p. 87 | 7500-3H B | D 2476-81 (87) | R-1171-76 | | |
| Gamma and photon emitters. | Gamma ray Spectrometry. | 901.1 | | | | | D-3649-85 | | 4.5.2.3 | |

[1] "Prescribed Procedures for Measurement of Radioactivity in Drinking Water," EPA Environmental Monitoring and Support Laboratory, Cincinnati, OH (EPA-600/4-80-032, August 1980. (EPA, 1980).
[2] "Interim Radiochemical Methodology for Drinking Water," EPA-600/4-75-008, March 1976. (EPA, 1976)
[3] Eastern Environmental Radiation Facility, Montgomery, AL 36109, "Radiochemical Procedures Manual," EPA 520/5-84-006, August 1984. (EPA, 1984a).
[4] "Radiochemical Analytical Procedures for Analysis of Environmental Samples," EMSL-LV-0539-17, March 1979. (EPA, 1976b).
[5] "Standard Methods for the Examination of Water and Wastewater," 17th edition, American Public Health Association, American Water Works Association, Water Pollution Control Federation, 1989. (APHA, 1989).
[6] 1989 Annual Book of ASTM Standards, Vol. 11.02, American Society for Testing and Materials, 1916 Race Street, Philadelphia, Pa. 19103. (ASTM, 1989)
[7] Methods for Determination of Radioactive Substances in Water and Fluvial Sediments," Book 5, 1989, Techniques of Water-Resources Investigations of the United States Geological Survey, Chapter A5. (USGS, 1989).
[8] Environmental Measurements Laboratory, U.S. Department of Energy, "EML PROCEDURES MANUAL, 27th edition." (DOE, 1990).
[9] "Determination of $^{226}$Ra and $^{228}$Ra (Ra-02), Radiological Sciences Institute Center for Research—New York State Department of Health, January 1980 (Revised June 1982). (NY State DOH, 1982).
[10] "Determination of Radium 228 in Drinking Water," State of New Jersey—Department of Environmental Protection—Division of Environmental Quality—Bureau of Radiation and Inorganic Analytical Services, August 1990. (NJ DEQ, 1990).
[11] Method 913—Radon in drinking water by liquid scintillation, Environmental Monitoring and Support Laboratory, Las Vegas, NV. (EPA 1991q).
[12] Appendix D, Analytical Test Procedure, "The Determination of Radon In Drinking Water," p. 22, Two Test Procedures for Radon In Drinking Water, Interlaboratory Collaborative Study, EPA/600/2-87/082, March 1987. (EPA, 1987e).

(2) Sample collection for radon, radium-226, radium-228, adjusted gross alpha, uranium, and beta and photon emitters under this section shall be conducted using the sample preservation, container, and maximum holding time procedures specified in the table below:

| Sampling handling, preservation, holding times | | Container [2] | Maximum holding time [3] |
|---|---|---|---|
| Parameter | Preservative [1] | | |
| Gross alpha | Conc. HCl or $HNO_3$ to pH <2 [4] | P or G | 6 months. |
| Gross beta | Conc. HCl or $HNO_3$ to pH <2 [4] | P or G | 6 months. |
| Radium-226 | Conc. HCl or $HNO_3$ to pH <2 | P or G | 6 months. |
| Radium-228 | Conc. HCl or $HNO_3$ to pH <2 | P or G | 6 months. |
| Radon-222 [5] | Cool 4°C. | Glass with Teflon-lined septum | 4 days |
| Uranium natural | Conc. HCl or $HNO_3$ to pH <2 | P or G | 6 months. |
| Radioactive Cesium | Conc. HCl to pH <2 | P or G | 6 months. |
| Radioactive Strontium | Conc. HCl or $HNO_3$ to pH <2 | P or G | 6 months. |
| Radioactive Iodine | None | P or G | 6 months. |
| Tritium | None | G | 6 months. |
| Photon emitters | Conc. HCl or $HNO_3$ to pH <2 | P or G | 6 months. |

[1] (All except radon-22 samples). It is recommended that the preservative be added to the sample at the time of collection unless suspended solids activity is to be measured. However, if the sample must be shipped to a laboratory or storage area, acidification of the sample (in its original container) may be delayed for a period not to exceed 5 days. A minimum of 16 hours must elapse between acidification and analysis
[2] P=Plastic, hard or soft; G=Glass, hard or soft

[3] Holding time is defined as the period from time of sampling to time of analysis. In all cases, samples should be analyzed as soon after collection as possible.
[4] If HCl is used to acidify samples which are to be analyzed for gross alpha or gross beta activities, the acid salts must be converted to nitrate salts before transfer of the samples to planchets.
[5] The procedure of a positive pressure collection in 60-ml glass bottles is to be followed. This procedure is described in appendix C, NIRS Sampling Instructions—Radon, p. 26, Two Test Procedures For Radon In Drinking Water, Interlaboratory Collaborative Study, EPA/600/2-87/082, March 1987.

(3) Analysis under this section shall only be conducted by laboratories that have received approval by EPA or the State. To receive approval to conduct analyses for radon, radium-226, radium-228, adjusted gross alpha, uranium, and beta and photon emitters the laboratory must:

(i) Analyze Performance Evaluation samples which include those substances provided by EPA Environmental Monitoring and Support Laboratory or equivalent samples provided by the State.

(ii) Achieve quantitative results on the analyses that are within the following acceptance limits:

| Contaminant | Acceptance Limits [1] |
|---|---|
| Radium-226 | ±30% at ≥5 pCi/l. |
| Radium-228 | ±50% at ≥5 pCi/l. |
| Uranium | ±30% at ≥5 pCi/l. |
| Radon-222 [2] | ±30% at ≥300 pCi/l. |
| Gross alpha emitters | ±50% at ≥15 pCi/l. |
| Gross beta emitters | ±30% at ≥30 pCi/l. |
| Radioactive Cesium | ±30% at ≥10 pCi/l. |
| Radioactive Iodine | ±20% at ≥20 pCi/l. |
| Radioactive Strontium total, 89 and 90. | ±30% at ≥5 pCi/l. |
| Tritium | ±20% at ≥1200 pCi/l. |

[1] Acceptance limits based on 100 minute count.
[2] Radon acceptance limits based on 4 day elapsed time from sample collection to analysis.

6. Section § 141.32 is amended by adding paragraphs (e)(77) through (82), to read as follows:

**§ 141.32 Public notification.**

* * * * *

(e) * * *

(77) *Radon:* The United States Environmental Protection Agency (EPA) sets drinking water standards and has determined that radon is of health concern at certain levels of exposure. Radon is a naturally occurring radioactive contaminant that occurs in ground water. It is a gas, and is released from water into household air during water use. Radon has been found in epidemiology studies to cause lung cancer in humans at high exposure levels; at lower exposure levels the risk of lung cancer is reduced. EPA has set the drinking water standard for radon in public water supplies at 300 picocuries per liter (pCi/l) to protect against lung cancer risk. Drinking water that meets the EPA standard is associated with little of this risk and is considered safe for radon.

(78) *Radium 226:* The United States Environmental Protection Agency (EPA) sets drinking water standards and has determined that radium 226 is of health concern at certain levels of exposure. Radium 226 is a naturally occurring radioactive contaminant that occurs primarily in ground water. Radium 226 has been found in epidemiology studies to cause bone cancer in humans at high exposure levels, and is believed to cause other cancers as well; at lower exposure levels the risk of cancer is reduced. EPA has set the drinking water standard for radium 226 at 20 picocuries per liter (pCi/l) to protect against cancer risk. Drinking water that meets the EPA standard is associated with little of this risk and is considered safe for radium 226.

(79) *Radium 228:* The United States Environmental Protection Agency (EPA) sets drinking water standards and has determined that radium 228 is of health concern at certain levels of exposure. Radium 228 is a naturally occurring radioactive contaminant that occurs primarily in ground water. Radium 228 has been found in epidemiology studies to cause bone cancer in humans at high exposure levels and is believed to cause other cancers as well; at lower exposure levels the risk of bone cancer is reduced. EPA has set the drinking water standard for radium 228 and 20 picocuries per liter (pCi/l) to protect against cancer risk. Drinking water that meets the EPA standard is associated with little of this risk and is considered safe for radium.

(80) *Uranium:* The United States Environmental Protection Agency (EPA) sets drinking water standards and has determined that uranium is of health concern at certain levels of exposure. Uranium is a naturally occurring radioactive contaminant that occurs in both ground and surface water. Uranium is believed to cause bone cancer and other cancers in humans at high exposure levels; at lower exposure levels the risk of cancer is reduced. EPA also believes uranium can be toxic to the kidneys. EPA has set the drinking water standard for uranium at 20 micrograms per liter (μgl) to protect against both cancer risk and risk of kidney damage. Drinking water that meets the EPA standard is associated with little of this risk and is considered safe for uranium.

(81) *Gross Alpha:* The United States Environmental Protection Agency (EPA) sets drinking water standards and has determined that alpha emitting radionuclides may be of health concern at certain levels of exposure. Alpha emitters are primarily naturally occurring radioactive contaminants, but several derive from man-made sources. They may occur in either ground or surface water. Alpha emitters are believed to cause cancer in humans at high exposure levels because they emit ionizing radiation. At lower levels, the risk of cancer is reduced. EPA has set the drinking water standard for alpha emitters at 15 picocuries per liter (pCi/l) to protect against cancer risk. Drinking water that meets the EPA standard is associated with little of this risk and is considered safe for alpha emitters.

(82) *Beta and photon emitters:* The United States Environmental Protection Agency (EPA) sets drinking water standards and has determined that beta and photon emitting radionuclides may be of health concern at certain levels of exposure. Beta and photon emitters are primarily man-made radioactive contaminants associated with the operation of nuclear power facilities, facilities using radioactive material for research or manufacturing, or facilities where these materials are disposed. Some beta emitters are naturally occurring. Beta and photon emitters are expected to occur primarily in surface water. Beta and photon emitters are believed to cause cancer in humans at high exposure levels because they emit ionizing radiation. At lower levels, the risk of cancer is reduced. EPA has set the drinking water standard for beta and photon emitters at 4 millirems effective dose equivalent per year (mrem ede/yr) to protect against cancer risk. Drinking water that meets the EPA standard is associated with little of the risk and is considered safe for beta and photon emitters.

* * * * *

7. A new section § 141.44 is added to subpart E to read as follows:

**§ 141.44 Special monitoring for radionuclides.**

(a) Each community and non-transient, non-community water system shall take one sample at each sampling point for lead-210 and report the results to the State. Monitoring must be completed by December 1996.

(b) Groundwater systems shall take a minimum of one sample at every entry point to the distribution system which is representative of each well after treatment (hereafter called a sampling point). Each sample must be taken at the same sampling point unless conditions

make another sampling point more representative of each source or treatment plant.

(c) Surface water systems.

Note: For purposes of this paragraph, surface water systems include systems with a combination of surface and ground sources.

shall take a minimum of one sample at points in the distribution system that are representative of each source or at each entry point to the distribution system after treatment (hereafter called a sampling point). Each sample must be taken at the same sampling point unless conditions make another sampling point more representative of each source or treatment plant.

(d) If the system draws water from more than one source and the sources are combined before distribution, the system must sample at an entry point to the distribution system during periods of normal operating conditions (i.e., when water representative of all sources is being used).

(e) The State may require a confirmation sample for positive or negative results.

(f) Instead of performing the monitoring required by this section, a community water system or non-transient non-community water system serving fewer than 150 service connections may send a letter to the State stating that the system is available for sampling. This letter must be sent to the State by January 1, 1996. The system shall not send such samples to the State, unless requested to do so by the State.

8. A new § 141.53 is added to subpart F to read as follows:

**§ 141.53 Maximum contaminant level goals for Radionuclides.**

MCLGs for the radionuclides are as follows:

| Contaminant | MCLG |
|---|---|
| Radon 222 | Zero. |
| Radium-226 | Zero. |
| Radium-228 | Zero. |
| Uranium | Zero. |
| Gross alpha emitters | Zero. |
| Beta and photon emitters | Zero. |

9. A new section 141.64 is added to subpart G to read as follows:

**§ 141.64 Maximum contaminant levels for radionuclides.**

(a) The following maximum contaminant levels for Radionuclides apply to community and non-transient, non-community water systems. The effective date for these MCLs is [insert date 18 months after publication of the final rule in the **Federal Register**].

| Contaminant | MCL |
|---|---|
| (1) Radon-222 | 300 pCi/l. |
| (2) Radium-226 | 20 pCi/l. |
| (3) Radium-228 | 20 pCi/l. |
| (4) Uranium | 20 µg/l [1]. |
| (5) Adjusted gross alpha | 15 pCi/l. |
| (6) Beta particle and photon emitters. | 4 mrem ede/yr.[2] |

[1] NOTE: 20 ug/l uranium is approximately equal to 30 pCi/l, using an activity-to-mass conversion of 1.3 pCi/ug. The activity-to-mass ratio can vary depending on the relative amounts of uranium-234, -235 and -238 that are present in a sample. The MCL applies to the total mass of uranium in the sample.

[2] NOTE: The unit mrem ede/yr refers to the dose committed over a period of 50 years to reference man (ICRP 1975) from an annual intake at the rate of 2 liters of drinking water per day.

(b) The Administrator, pursuant to section 1412 of the Act, hereby identifies as indicated in the table below the best technology, treatment technique, or other means available for achieving compliance with the maximum contaminant level for Radionuclides identified in paragraph (a) of this section:

BAT FOR RADIONUCLIDES LISTED IN SECTION 141.64

| Contaminant | BAT |
|---|---|
| Radon 222 | Aeration: Packed tower, spray, slat tray and other forms. |
| Radium 226 | Ion exchange, Reverse osmosis, Lime softening. |
| Radium 228 | Ion exchange, Reverse osmosis, Lime softening. |
| Uranium (N) | Ion exchange, reverse osmosis, Lime softening, coagulation/filtration. |
| Alpha particle emitters. | Reverse osmosis. |
| Beta particle and photon emitters. | Mixed bed ion exchange, Reverse osmosis. |

## PART 142—NATIONAL PRIMARY DRINKING WATER REGULATIONS IMPLEMENTATIONS

1. The authority citation for part 142 continues to read as follows:

Authority: 42 U.S.C. 300g, 300g–1, 300g–2, 300g–3, 300g–4, 300g–5, 300g–6, 300j–4, and 300j–9.

2. Section 142.14 is amended by adding paragraphs (d)(12) and (d)(13).

**§ 142.14 Records kept by States.**

* * * * *

(d) * * *

(12) Records of any determination of a system's vulnerability to contamination from photon and beta emitters due to their proximity to an emitting source or use of source water influenced by a source of radiation. The records shall also include the basis for such determination.

(13) Records of all current monitoring requirements and the most recent monitoring frequency decision pertaining to each contaminant, including the monitoring results and other data supporting the decision, the State's findings based on the supporting data and any additional bases for such decision; records shall be kept in perpetuity or until a more recent monitoring frequency decision has been issued.

* * * * *

3. In § 142.15 is amended by adding a new paragraph (c)(5) to read as follows:

**§ 142.15 Reports by States.**

* * * * *

(c) * * *

(5) The results of monitoring for the unregulated contaminants in § 141.44 shall be reported within one quarter after the December 1996 completion date for monitoring lead-210.

* * * * *

4. Section 142.16 is amended by adding a new paragraph (f) to read as follows:

**§ 142.16 Special primacy requirements.**

* * * * *

(f) An application for approval of a State program revision for Radionuclides which adopts the requirements specified in §§ 141.25, 141.32, 141.44, and 141.64 must contain the following (in addition to the general primacy requirements enumerated elsewhere in this part, including the requirement that state regulations be at least as stringent as the federal requirements):

(1) If a State chooses to issue waivers from the monitoring requirements in §§ 141.25 and 141.44, the State shall describe the procedures and criteria which it will use to review waiver applications and issue waiver determinations.

(i) The procedures for each contaminant or class of contaminants shall include a description of:

(A) The waiver application requirements;

(B) The State review process for reviewing waiver applications;

(ii) The State decision criteria, including the factors that will be considered in deciding to grant or deny waivers. The decision criteria must include the factors specified in §§ 141.25(b)(4) and 141.25(c)(3).

(2) A State shall determine what systems are vulnerable to beta and photon emitting sources. States shall specify the procedures they will use to decide which systems are vulnerable. Vulnerability of each public water

system shall be determined by the State based upon an assessment of the following factors:

(i) Proximity of water system to a potentially discharging source, such as a nuclear power facility, or where there is a commercial or industrial use, disposal, or storage of the materials;

(ii) Previous monitoring results; and

(iii) Use of water influenced by a nuclear power facility or other potential discharger.

5. A new § 142.65 is added to subpart G to read as follows:

**§ 142.65 Variances and Exemptions from the maximum contaminant levels for the radionuclide contaminants listed in § 141.64.**

(a) The Administrator, pursuant to section 1415(a)(1)(A) of the Act, hereby identifies the following as the best technology, treatment techniques, or other means available for achieving compliance with the maximum contaminant levels for the radionuclides listed in § 141.64, for the purpose of issuing variances and exemptions.

BAT FOR RADIONUCLIDES LISTED IN § 141.64

| Contaminant | BAT |
|---|---|
| Radon 222 | 1. |
| Radium 226 | 2,3,4. |
| Radium 228 | 2,3,4. |
| Uranium (N) | 2,3,4,5. |
| Gross alpha particle emitters | 3. |
| Gross beta particle and photon emitters. | 3,6. |

Key to BATs in table:
1=Aeration: Packed Tower, spray, slat tray and other forms.
2=Ion exchange.
3=Reverse osmosis.
4=Lime softening; except for systems serving 500 or fewer connections.
5=Coagulation/filtration; except for systems serving 500 or fewer connections.
6=Mixed bed ion exchange.

(b) A State shall require community water systems and non-transient, non-community water systems to install and/or use any treatment method identified in § 141.64 as a condition for granting a variance except as provided in paragraph (c) of this section. If, after the system's installation of the treatment method, the system cannot meet the MCL, that system shall be eligible for a variance under the provisions of section 1415(a)(1)(A) of the Act.

(c) If a system can demonstrate through comprehensive engineering assessment, which may include pilot plant studies that the treatment methods identified in § 141.64 would only achieve a de minimis reduction in contaminants, the State may issue a schedule of compliance that requires the system being granted the variance to examine other treatment methods as a condition of obtaining the variance.

(d) If the State determines that a treatment method identified in paragraph (c) of this section is technically feasible, the Administrator or primary State may require the system to install and/or use that treatment method in connection with a compliance schedule issued under the provisions of section 1415(a)(1)(A) of the Act. The State's determination shall be based upon studies by the system and other relevant information.

(e) The State may require a public water system to use bottled water (except for radon) or other means as a condition of granting a variance or an exemption from the requirements of § 141.64, to avoid an unreasonable risk to health. Granular activated carbon point-of-use devices cannot be used as a means of being granted a variance or an exemption for radon.

(f) Public water systems that use bottled water as a condition for receiving a variance or an exemption from the requirements of § 141.64 must meet the following requirements. Bottled water cannot be used as a means of being granted a variance or an exemption for radon.

(1) The Administrator or primacy State must require and approve a monitoring program for bottled water. The public water system must develop and put in place a monitoring program that provides reasonable assurances that the bottled water meets all MCLs. The public water system must monitor a representative sample of the bottled water for all contaminants under regulated § 141.64 the first quarter that it supplies that bottled water to the public, and annually thereafter. Results of the monitoring program shall be provided to the State annually; or

(2) The public water system must receive a certification from the bottled water company that the bottled water supplied has been taken from an "approved source" as defined in 21 CFR 129.3(a); the bottled water company has conducted monitoring in accordance with 21 CFR 129.80(g) (1) through (3); and the bottled water does not exceed any MCLs or quality limits as set out in 21 CFR 103.35, 110, and 129. The public water system shall provide the certification to the State the first quarter after it supplies bottled water and annually thereafter; and

(3) The public water system is fully responsible for the provision of sufficient quantities of bottled water to every person supplied by the public water system, via door-to-door bottled water delivery.

(g) Public water systems that use point-of-use devices as a condition for obtaining a variance or an exemption from NPDWRs for Radionuclides (except radon, as POU treatment is not allowed for variances to the radon MCL) must meet the following requirements:

(1) It is the responsibility of the public water system to operate and maintain the point-of-use device.

(2) The public water system must develop a monitoring plan and obtain State approval for the plan before point-of-use devices are installed for compliance. This monitoring plan must provide health protection equivalent to a monitoring plan for central water treatment.

(3) Effective technology must be properly applied under a plan approved by the State.

(4) The State must require adequate certification of performance, field testing, and if not included in the certification process, a rigorous engineering design review of the point-of-use devices.

(5) The design and application of the point-of-use devices must consider the tendency for an increase in heterotrophic bacteria concentrations in water treated with activated carbon. It may be necessary to use frequent backwashing, post-contactor disinfection, and Heterotrophic Plate Count monitoring to ensure that the microbiological safety of the water is not compromised.

(6) All consumers shall be protected. Every building connected to the system must have a point-of-use device installed, maintained, and adequately monitored. The State must be assured that every building is subject to treatment and monitoring and that the rights and responsibilities of the public water system customer convey with title upon sale of property.

[FR Doc. 91-16523 Filed 7-17-91; 8:45 am]
BILLING CODE 6560-50-M

federal register

Thursday
July 18, 1991

# Part III

# Department of Health and Human Services

## Social Security Administration

20 CFR Parts 404 and 416

**Federal Old-Age, Survivors and Disability Insurance and Supplemental Security Income; Listing of Impairments, Mental Disorders in Adults; Proposed Rules**

**DEPARTMENT OF HEALTH AND HUMAN SERVICES**

**Social Security Administration**

**20 CFR Parts 404 and 416**

**[Regs. No. 4 and 16]**

## Federal Old-Age, Survivors and Disability Insurance and Supplemental Security Income; Listing of Impairments, Mental Disorders in Adults

**AGENCY:** Social Security Administration, HHS.

**ACTION:** Proposed rules.

**SUMMARY:** These proposed amendments revise the medical criteria that are used to evaluate mental disorders in adults (persons age 18 and over) and persons under age 18 where the disease process is similar to that in adults for the disability programs in title II and title XVI of the Social Security Act. The revisions reflect advances in medical knowledge, treatment, and methods of evaluating mental disorders and provide up-to-date criteria for use in the evaluation of disability claims based on mental disorders.

**DATES:** To be sure that your comments are considered, we must receive them no later than September 16, 1991.

**ADDRESSES:** Comments should be submitted in writing to the Commissioner of Social Security, Department of Health and Human Services, P.O. Box 1585, Baltimore, MD 21235, or they may be delivered to the Office of Regulations, Social Security Administration, 3-B-1 Operations Building, 6401 Security Boulevard, Baltimore, MD 21235, between 8 a.m. and 4:30 p.m. on regular business days. Comments may be inspected during these same hours by making arrangements with the contact person shown below.

**FOR FURTHER INFORMATION CONTACT:** William J. Ziegler, Legal Assistant, Office of Regulations, Social Security Administration, 6401 Security Boulevard, Baltimore, MD 21235, (301) 965-1759.

**SUPPLEMENTARY INFORMATION:** These proposed rules affect the disability programs under title II and title XVI of the Social Security Act. In addition, to the extent that Medicare and Medicaid eligibility are based on title II and title XVI eligibility, these rules also affect the Medicare and Medicaid programs.

The final rules, published in the **Federal Register** on August 28, 1985 (50 FR 35038), contain the listings used to evaluate mental impairments in adults and persons under age 18 where the disease process is similar to that in adults for determining eligibility for disability under titles II and XVI of the Social Security Act. Those final rules included a 3-year sunset provision which provided that the listings would expire on August 27, 1988, unless the Secretary of Health and Human Services (the Secretary) extended or revised and promulgated them again. The reason given for the sunset provision was that the dynamic nature of the diagnosis, evaluation, and treatment of mental disorders would require us to periodically revise and update the rules in this area.

On August 9, 1988, the Secretary extended the expiration date of those rules to August 27, 1990 (53 FR 29878). As we explained, the extension was needed to provide additional time to evaluate the rules, and to solicit and evaluate public comments. Because that evaluation and the formulation of proposed revisions took longer than anticipated, the expiration date of those rules was extended for an additional year, to August 27, 1991 (55 FR 35286).

On October 13, 1988, we announced (53 FR 40135) a public meeting to obtain comments on the need to revise the listings and related regulations and, if so, the specific nature of the revisions. The meeting was held in Baltimore on November 9-10, 1988. Testimony provided at the meeting and written comments received in response to the meeting announcement, along with information from our other evaluation activities, have been considered by Federal and State representatives who have expertise in the evaluation of mental impairment claims to determine the need for and nature of these revisions.

In addition, we also considered the comments received in response to the proposed revisions to the listings used to evaluate mental impairments in children. Those proposed revisions were published on August 14, 1989 (54 FR 33238). To the extent that the comments addressed issues also applicable to these adult listings, we have addressed those concerns. The final rules revising the childhood mental listings were published on December 12, 1990 (55 FR 51208). We have made the proposed revisions to the adult criteria consistent with the childhood criteria wherever appropriate.

In conjunction with the revisions to these rules, we also propose to amend §§ 404.1520a and 416.920a, which discuss the special procedure used to evaluate mental impairments under these rules. Also, as we explained when we published the final rules revising the childhood mental impairment criteria, we propose to expand this procedure to include childhood mental impairments.

We also propose technical amendments to the introductory text of listings 5.00 (Digestive System), 11.00 (Neurological), and 112.00 (Mental Disorders), and to various childhood mental disorders listings, as explained below.

After the public has had an opportunity to comment on these proposed rules and we carefully consider the comments, we will publish final regulations which we propose to be effective for 5 years. We will continue to carefully monitor the regulations and if our monitoring reveals the need for revisions before the end of the 5-year period, we will propose such revisions in the **Federal Register**.

### Explanation of Proposed Revisions

The medical terms used to describe the major mental disorders and their characteristics and symptoms have been updated to conform to the nomenclature in the "Diagnostic and Statistical Manual of Mental Disorders (Third Edition—Revised)" (DSM-III-R) published by the American Psychiatric Association in 1987. This edition updates the one published in 1980 and is now widely used by psychiatrists, psychologists, and other mental health professionals. It provides a common basis for communication, which facilitates the evaluation of medical reports used in determining disability. Although the terminology is based on the DSM-III-R, it is not always identical to the terminology used in that volume. As indicated in the "Cautionary Statement" on page xxix of the DSM-III-R, "It is to be understood that inclusion here, for clinical and research purposes, of a diagnostic category * * * does not imply that the condition meets legal or other nonmedical criteria for what constitutes mental disease, mental disorder, or mental disability. The clinical and scientific considerations involved in categorization of these conditions as mental disorders may not be wholly relevant to legal judgments, for example, that take into account such issues as individual responsibility, disability determination, and competency."

The revisions reflect evolving medical knowledge of the characteristics of mental disorders and their treatment and management, and our program experience gained in monitoring and evaluating the current regulations. Our experience indicates that the current regulations basically are valid, reliable,

and generally in need of relatively few major revisions.

One major change in the proposed rules is a new psychoactive substance dependence listing (listing 12.09) with its own paragraph A diagnostic criteria and paragraph B functional criteria to replace the present reference listing structure. This clarifies the intent and purpose of the listing for evaluating such disorders. As with the other listings, the A criteria are derived from the DMS-III-R.

Another proposed change is to incorporate the "capsule definition" (the introductory paragraph following the listing title which contains the definition and description of the disorders in each listing category) into the paragraph A diagnostic criteria of each listing. This better reflects the relationship between the capsule definition and the diagnostic criteria and the need to consider the diagnostic criteria in the context of the capsule definition. Also, the definitions and descriptions have been updated based on the DSM-III-R.

In the recently published childhood mental disorders listings, the capsule definition is placed before the paragraph A criteria in each listing category, as in the current adult mental disorders listings. Due to the timing of the formulation and publication of the childhood mental listings, we were unable to change the placement consistent with this proposal. We must emphasize, however, that the difference in placement in no way implies any difference between the adult and childhood mental listings in the relationship between the capsule definitions and their paragraph A criteria. There is no difference, and none should be inferred. When the adult and childhood mental listings are revised again, we will make the placement of the capsule definitions consistent.

Two other proposed changes are in the third and fourth paragraph B functional criteria ("B3" and "B4") in each listing. The B criteria are used to assess the resulting degree of functional limitation when evaluating the severity of the impairment. The focus of the function addressed in the B3 criterion is shifted to the measurement of difficulties in task completion and the degree of limitation needed to satisfy the B3 criterion is changed to parallel the B1 and B2 criteria. (The same change is being proposed for the childhood mental disorders listings by technical amendments to listing 112.02B.2.d and its references in 112.00C, to clarify that this paragraph B criterion refers to a child's ability to complete tasks in a timely manner.) The proposed B4 criterion is reworded to clarify that deterioration in function is related to decompensation (i.e., worsening of symptoms and/or signs). The frequency of the episodes of decompensation needed to satisfy the B4 criterion is currently stated as "three" in §§ 404.1520a(b)(3) and 416.920a(b)(3). We are now stating this requirement within the B4 criterion. We are also specifying the time period within which the episodes must occur, as well as their required duration, i.e., the episodes must average three times per year and each last at least two weeks. We believe that episodes of decompensation of this frequency and duration, in combination with at least one other B criterion at listing level, reflect a degree of limitation incompatible with the ability to work.

Another proposed change is to add to listings 12.02 (Organic Mental Disorders) and 12.04 (Affective Disorders) paragraph C functional criteria similar to those in listing 12.03 (Schizophrenic, Paranoid and Other Psychotic Disorders), which also has been modified as explained below. This will facilitate the evaluation process for individuals with chronic disorders in these categories.

The language in proposed listings 12.02C, 12.03C, and 12.04C, and proposed §§ 404.1520a(c) (1) and (2) and 416.920a(c) (1) and (2) reflects our longstanding policy as to what constitutes a severe impairment under §§ 404.1521 and 416.921 and Social Security Ruling 85-28.

Another proposed change in current listings 12.07 (Somatoform Disorders), 12.08 (Personality Disorders), and 12.09 (Substance Addiction Disorders) is to standardize at two the number of paragraph B criteria that must be satisfied for all listings to be met. As we indicated on February 4, 1985, when proposing the current listings (50 FR 4948), the number of B criteria required could change as we gained additional program experience. Some impairments have been considered inherently more severe than others. Thus, a different number of B criteria currently are required to satisfy some listings; however, given our experience, we do not consider this necessary any longer. Since the paragraph B criteria are the functional measures of listing-level severity, the same number of paragraph B criteria will be disabling under all of the listings that employ paragraph B criteria.

In §§ 404.1520a and 416.920a, we modify the procedure for evaluating mental impairment severity. We propose to refer to the procedure as the "technique" throughout these sections to facilitate our discussion of the procedure. As explained later, we modify the B criteria rating scales used to assess the degree of functional limitation and provide definitions of the scale points. We modify the requirements for documenting application of the technique at the initial and reconsideration levels. Our medical or psychological consultant must complete the standard document, but he or she may request the disability examiner to assist in this task. We modify the requirements for documenting application of the technique at the reconsideration disability hearing level to account for the role of the disability hearing officer. We also modify the requirements at the administrative law judge hearing and Appeals Council levels to indicate that at those levels, application of the technique will be reflected in the written decision, rather than by completion of the standard document. We propose this change because we believe that the written decisions which administrative law judges and Appeals Council members already provide to individual claimants are the best place to document the application of the technique.

Also in §§ 404.1520a and 416.920a, we delete certain provisions that cover what is already covered in §§ 404.941, 404.948, 416.1441, and 416.1448. These latter sections contain provisions for administrative law judges to remand cases for revised determinations under specified circumstances. We modify the term "medical advisor," as we are in the process of doing in other regulations, to read "medical expert" because the latter better reflects the role of our contract physicians in the hearing process. Finally, throughout these sections, we also add appropriate language to expand application of the technique to childhood mental impairment claims.

In listing 12.07 (Somatoform Disorders), we add a fourth criterion to paragraph A to address eating disorders. In connection with this change, we delete the last sentence in paragraph B of listing 5.00 (Digestive System), which explains the evaluation of weight loss not due to digestive system disease. The revision to 5.00B provides flexibility to assess functional restrictions resulting from such weight loss under the criteria in listing 5.00 even if the weight loss is not causally related to a digestive system disease.

Also in listing 12.07, we add a fifth criterion to paragraph A to address tic disorders. In connection with this addition and the one discussed above, we modify the title of listing 12.07 to reflect the expanded scope of the listing.

We propose a new paragraph F in the introduction to listing 11.00 to provide guidance to evaluate cases involving traumatic brain injury (TBI). TBI cases are evaluated under referential listing 11.18 (Cerebral trauma). Paragraph F recognizes the sometimes unpredictable course of TBI during the first few months post-injury. Thus, we propose that these cases not be adjudicated until evidence of the neurological (with some exceptions) and mental conditions at least 3 months, and possibly 6 months, post-injury is obtained to allow time for the conditions to stabilize. This is similar to the existing 3-month development requirement in listing 11.04 (Central nervous system vascular accident). Of course, we will not delay adjudication if a case can be allowed on the basis of some other impairment.

In addition to the changes described above, the following is a summary of other proposed revisions.

**12.00 Preface**

We are proposing a few significant additions and changes to the preface, as well as various lesser changes.

In 12.00A (*Introduction*), we update the list of titles of the listing categories to conform to DSM–III–R nomenclature. We specify that for listings having paragraph C criteria, evaluation of functional limitations must be done using the paragraph B criteria before applying the paragraph C criteria. Because proposed listing 12.09 (Psychoactive Substance Dependence Disorders) is not a reference listing, we delete our current description. Also, we add a description of the structure of listing 12.05.

Also in 12.00A, we add an explanation that the listings are examples of disorders considered severe enough for us to find an individual disabled. If the impairment(s) does not meet the listings, we will determine whether the impairment(s) is equivalent to a listed impairment.

We are proposing only editorial changes to enhance clarity and readability in 12.00B (Need for Medical Evidence).

In 12.00C (Assessment of Severity), in discussing the evaluation of the functional areas, we incorporate references to the sustainability of the function. This clarifies our longstanding policy that the ability to sustain the function is essential to the effective performance of the function. Item 3 (Task completion) reflects by its new title the focus on measuring difficulties in this area. We clarify the language regarding the assessment of task completion in work evaluations. In item 4 (An episode of decompensation causing deterioration), we explain that decompensation refers to exacerbation of symptoms and/or signs caused by failure to adapt to stress, which leads to deterioration in functional level. Because withdrawal resulting from decompensation is one form of deterioration, the specific reference to withdrawal is deleted. We delete the reference to "work or work-like settings" here because episodes outside these settings are equally useful in deciding an individual's ability to work.

In 12.00D (Documentation), in the second paragraph we explain that an individual with a mental impairment usually can best describe his or her own functional limitations. The presence of a mental impairment does not automatically rule out the individual as a reliable source of such information. We also explain that an individual's treating sources, and other professional health care providers, when available, normally can provide valuable additional functional information. For instance, as part of the multiaxial evaluation system described in the DSM–III–R, treating sources may assess the individual's psychological, social, and occupational functioning on the Global Assessment of Functioning (GAF) Scale. Even if the treating source does not utilize the GAF Scale, the source should be able to provide observations and judgments about the individual's functional abilities and limitations. We also explain that nonmedical sources also may provide much valuable information.

Also in 12.00D, we replace existing paragraphs 5–8 with new paragraphs 5–18. In the new language, we clarify the use of psychometric testing, describe the salient characteristics of a good test, explain when such testing is to be purchased as part of a consultative examination, and indicate that certain types of tests are not useful for our program purposes. We add new paragraphs 19–20 to discuss the evaluation of cases involving loss of cognitive capacity when no test results are available for periods before the onset of the impairment for comparison with current test results. This relates to the proposed revised language in listing 12.02A.8 concerning decrease of cognitive functioning, which we discuss below.

We also add three paragraphs, 22–24, at the end of 12.00D. Paragraph 22 refers to 11.00F (Cerebral trauma) for guidelines on evaluating cases involving traumatic brain injury. Paragraph 23 discusses the evidence needed to evaluate agoraphobia and other phobic, panic, and post-traumatic stress disorders. Paragraph 24 discusses the evaluation of eating disorders.

We make various editorial changes in 12.00E–I (Chronic Mental Impairments, Effects of Structured Settings, Effects of Medication, Effect of Treatment, Technique for Reviewing the Evidence in Mental Disorders Claims to Determine Level of Impairment Severity) to enhance clarity and readability.

**12.01 Category of Impairments, Mental**

*12.02 Organic Mental Disorders.* In 12.02A.3, 4, and 5 we add examples of factors characteristic of organic mental disorders. We separate the two parts of the current 12.02A.6 into distinct criteria, 12.02A.6 and 12.02A.7, to better reflect their distinct characteristics. We also add another example to 12.02A.7. In the proposed 12.02A.8 (currently 12.02A.7) we remove from the present criterion the need for a 15 point decrease in the IQ level in order to demonstrate a loss of cognitive function to prevent the misunderstanding that anything less than the stated 15 IQ points does not constitute a loss of cognitive function. We also delete the reference to specific types of tests. (See the discussion in 12.00D of the Preface.) In 12.02A.9 we add a new criterion to reflect additional characteristics often found in organic mental disorders.

*12.03 Schizophrenic, Delusional (Paranoid), Schizoaffective, and Other Psychotic Disorders.* We modify the title based on DSM–III–R nomenclature. We include schizoaffective disorders, as does the DSM–III–R, to eliminate confusion over whether to evaluate such disorders under listing 12.03 or 12.04. We adopt the DSM–III–R diagnostic requirement of having to exhibit psychotic symptoms for 6 months in 12.03A. In 12.03A.2 we add another example of pathological behavior. We shift the three types of abnormal affect cited in current 12.03A.3 to proposed 12.03A.4, consistent with DSM–III–R criteria. We shift the present 12.03A.4 to 12.03A.5 and add to it another example of a pathological emotional state.

We modify the paragraph C criteria in listing 12.03 to better reflect the nature of the disorders covered by the criteria. These alternative functional criteria are used to facilitate the evaluation of individuals who, at the time of adjudication, already have a chronic disorder. We define chronic disorders as those which have lasted at least two years. Individuals who do not have chronic conditions will be evaluated with the use of the paragraph B criteria. In addition, we modify 12.03C.1 to conform to the B4 criterion (as explained above in the fifth paragraph under

Explanation of Proposed Revisions). We also change the duration requirement in 12.03C.2 to better reflect the intent that the need for the structured setting must have existed for at least one year and be expected to continue.

*12.04 Mood Disorders.* We modify the title and the criteria in 12.04A.1–2 based on DSM–III–R nomenclature.

*12.05 Mental Retardation, Autistic Disorder, and Other Pervasive Developmental Disorders.* We modify the title and the definition that follows the title, including the definition of the "developmental period," based on DSM–III–R nomenclature and clarify that other pervasive developmental disorders are to be evaluated in this category. The upper IQ limit of 70 in 12.05C and 12.05D reflects the modification effectuated with the recent publication of the revised childhood mental listings on December 12, 1990 (55 FR 51208). The change from 69 was made to be consistent with the DSM–III–R.

We modify 12.05D and introduce 12.05E on autism or other pervasive developmental disorders as a separate paragraph to clarify the application of the criteria for evaluating the different types of disorders in these two paragraphs.

*12.06 Anxiety Disorders.* We modify the title and the wording in 12.06A.1, 12.06A.3, and 12.06A.5 based on DSM–III–R nomenclature.

*12.07 Somatoform. Eating, and Tic Disorders.* We add eating disorders and tic disorders to this category to specify the category under which they are to be evaluated. (Also, see 12.00D regarding evaluation of eating disorders under listing 5.08.) The listing now includes under one heading various mental disorders which have physical manifestations. We delete akinesia and dyskinesia from 12.07A.2.e because they are specific neurological conditions that denote definite organicity. We introduce an additional criterion for nonorganic disturbance of digestion or elimination in proposed 12.07A.2.g and modify the language in 12.07A.3 based on DSM–III–R nomenclature. We add 12.07A.4 to provide criteria to evaluate eating disorders (when not being evaluated under listing 5.08 or other body system listings). We add 12.07A.5 to provide criteria to evaluate tic disorders.

*12.08 Personality Disorders.* We modify the definition of these disorders in 12.08A and the language in 12.08A.6 and add 12.08A.7 based on DSM–III–R nomenclature.

*12.09 Psychoactive Substance Dependence Disorders.* We replace the current reference listing structure with a discrete set of criteria to clarify the evaluation of psychoactive substance dependence disorders. The proposed listing is based on criteria for psychoactive substance dependence in the DSM–III–R. However, we have consolidated several of the criteria in the DSM–III–R so that we have six paragraph A criteria.

We selected the number of paragraph A criteria needed to satisfy listing 12.09 based on the "severe" type of psychoactive substance dependence disorders described in the DSM–III–R. The DSM–III–R indicates that the "severe" type of these disorders is present when there are many symptoms in excess of those required to make the diagnosis of psychoactive substance dependence and these symptoms markedly interfere with functioning. Because listing 12.09, as well as the other adult mental listings, is designed to identify individuals who have marked interference with function, the number of paragraph A criteria needed to satisfy listing 12.09 is more than the number needed to make the diagnosis. However, if an individual does not have enough of the paragraph A criteria to satisfy listing 12.09 but still has enough to permit a diagnosis, this only means that the listing would not be met. We still must consider whether the listing is equaled and, if appropriate, make a further functional assessment of the impact of the disorder on the individual.

The proposed criteria in listing 12.09 specifically address the mental symptomatology and resulting functional limitations caused by these disorders. If the use of these substances also results in physical impairment(s), the physical impairment(s) will be evaluated under the applicable other body system listings. In such cases, we will follow the rules in §§ 404.1523 and 416.923 governing the evaluation of multiple impairments. If needed, the remaining physical residual functional capacities will be assessed.

**Other Changes**

We proposed technical changes to 112.00 (Mental Disorders) in Part B of Appendix 1 (childhood listings). We clarify paragraph 2.a of 112.00C (Assessment of Severity) to indicate that once children have attained age 3 we will use a valid verbal, performance, or full scale IQ as the primary criterion for measuring their cognitive function. In addition, we propose several changes to listing 112.12 (Developmental and Emotional Disorders of Newborn and Younger Infants (Birth to attainment of age 1)). First, we add abnormal responses to stimuli to the introductory sentence of the listing because this behavior is reflected in paragraph C of the current listing and is one of the factors that we consider when we evaluate developmental and emotional disorders of infancy. (We also propose a similar revision in the first two paragraphs of 112.00C.) Second, we add a new paragraph C to this listing, which indicates that the listing may be satisfied if the newborn or younger infant has not achieved the social development generally acquired by children no more than one-half the child's chronological age. In making this change, we redesignate current paragraph C as paragraph F. Finally, we clarify the language in paragraphs A, B, and E, but do not intend to change their meaning.

**Regulatory Procedures**

*Executive Order 12291*

These regulations have been reviewed under Executive Order 12291. While implementation of these regulations will involve some costs, these costs do not approach the dollar thresholds that meet any of the criteria for a major rule. Therefore, a regulatory impact analysis is not required.

*Regulatory Flexibility Act*

We certify that these regulations will not have a significant economic impact on a substantial number of small entities because they affect only disability claimants and beneficiaries under title II and title XVI of the Social Security Act. Therefore a regulatory flexibility analysis as provided in Public Law 96–354, the Regulatory Flexibility Act, is not required.

*Paperwork Reduction Act*

These proposed regulations contain new information collection requirements in §§ 404.1520a and 416.920a. As required by the Paperwork Reduction Act of 1980, we will submit a copy to the Office of Management and Budget (OMB) for its review. Organizations or individuals desiring to submit comments on these information collection requirements should direct them to the agency official whose name appears in this preamble and to the Office of Information and Regulatory Affairs, OMB, New Executive Office Building, room 3208, Washington, DC 20503, Attention: Desk Officer for HHS.

(Catalog of Federal Domestic Assistance Program Nos. 93.802, Social Security Disability Insurance; 93.807, Supplemental Security Income Program)

**List of Subjects**

*20 CFR Part 404*

Administrative practice and procedure, Death benefits, Disability benefits, Old-Age, Survivors, and Disability Insurance.

*20 CFR Part 416*

Administrative practice and procedure, Aged, Blind, Disability benefits, Public assistance programs, Supplemental Security Income.

Dated: November 6, 1990.

**Gwendolyn S. King,**

*Commissioner of Social Security.*

Approved: March 27, 1991.

**Louis W. Sullivan,**

*Secretary of Health and Human Services.*

## PART 404—FEDERAL OLD-AGE, SURVIVORS, AND DISABILITY INSURANCE (1950 _____)

For the reasons set out in the preamble, part 404, subpart P, chapter III of title 20, Code of Federal Regulations is amended as set forth below.

20 CFR part 404, subpart P, is amended as follows:

1. The authority citation for subpart P continues to read as follows:

Authority: Secs. 202, 205 (a), (b), and (d)–(h), 216(i), 221 (a) and (i), 222(c), 223, 225, and 1102 of the Social Security Act; 42 U.S.C. 402, 405 (a), (b), and (d)–(h), 416(i), 421 (a) and (i), 422(c), 423, 425, and 1302; sec. 505(a) of Pub. L. 96–265, 94 Stat. 473; secs. 2(d)(2), 5, 6, and 15 of Pub. L. 98–460, 98 State. 1797, 1801, 1802, and 1808.

2. Section 404.1520a is revised to read as follows:

**§ 404.1520a Evaluation of mental impairments.**

(a) *General.* The steps outlined in § 404.1520 apply to the evaluation of physical and mental impairments. In addition, in evaluating the severity of mental impairments, we must follow a special technique at each administrative level of review. This will assist us in:

(1) Identifying the need for additional evidence for the determination of impairment severity;

(2) Considering and evaluating functional consequences of the mental disorder(s) relevant to adults and children; and

(3) Organizing and presenting the findings in a clear, concise, and consistent manner.

(b) *Use of the technique to record pertinent findings and rate the degree of functional limitation.* (1) We must evaluate the pertinent symptoms, signs, laboratory findings, functional limitations, and effects of treatment contained in your case record. (See § 404.1508 for further information about what is needed to show an impairment.) If we determine that a medically determinable mental impairment(s) exists, we must specify the impairment(s) and the symptoms, signs, and laboratory findings that substantiate the presence of the impairment(s). Then we must rate the degree of functional limitation resulting from the impairment(s). The evidence must demonstrate that any limitation of functioning is the result of the mental impairment(s). When we rate the individual's (adult or child) degree of functional limitation, we must consider the individual's ability to function independently, appropriately, effectively, and on a sustained basis. When this rating is done for a child, it must be based upon age-appropriate expectations.

(2) In the adult criteria, we have identified four areas of function considered essential to work, and the degree of functional limitation in those areas must be rated on a scale that ranges from no limitation to a level of severity which is incompatible with the ability to perform those work-related functions. For the first three areas (activities of daily living, social functioning, and task completion), the rating of limitation must be done based upon the following five point scale: None, mild, moderate, marked, and extreme. For the fourth area (episodes of decompensation which cause the individual to deteriorate), the following four point scale must be used: None, one or two, three, four or more. The last two points on each of these scales represent a degree of limitation which is incompatible with the ability to perform the work-related function.

(3) For each of the first three functional areas in the adult criteria, the rating scale points are defined as follows:

(i) Activities of daily living:

None—activities are within normal range;
Mild—occasionally unable to perform activities;
Moderate—frequently unable to perform activities;
Marked—most of the time unable to perform activities;
Extreme—rarely able to perform activities.

(ii) Social functioning:

None—social relationships are within normal range;
Mild—generally normal relationships, with occasional minor disruptions due to factors such as withdrawal, conflicts, inappropriateness, or aggressiveness;
Moderate—limited relationships, with occasional serious disruptions due to factors such as withdrawal, conflicts, inappropriateness, or aggressiveness;
Marked—generally unable to maintain relationships, with frequent serious disruptions due to factors such as withdrawal, conflicts, inappropriateness, or aggressiveness;
Extreme—no ongoing relationships, with persistent serious disruptions due to factors such as withdrawal, conflicts, inappropriateness, or aggressiveness.

(iii) Task completion:

None—task completion is within normal limits;
Mild—occasional difficulty in completing complex tasks, but usually completes simple tasks;
Moderate—frequently may not be able to complete complex tasks without assistance or direction, and occasionally unable to complete simple tasks;
Marked—most of the time unable to complete complex tasks without assistance or direction, and frequently unable to complete simple tasks;
Extreme—unable to complete complex tasks, and most of the time unable to complete simple tasks.

(4) In the childhood criteria, we have identified three age groups, each with its own areas of function considered essential to functioning in an age-appropriate manner. Since a child's range of functions varies at different stages of maturation, the areas differ somewhat between age groups. The degree of functional limitation in each area in the appropriate age group must be rated on a scale that ranges from no limitation to a level of severity which is incompatible with the ability to perform those functions.

(i) For the first age group, birth to attainment of age 1, evaluated only under listing 112.12 (Developmental and Emotional Disorders of Newborn and Younger Infants), we have identified the following areas of function and behavior: Cognitive/communicative functioning; motor development; two facets of social functioning (paragraphs C and D of listing 112.12); and responsiveness to certain stimuli. For cognitive/communicative functioning, motor development, and the first facet of social functioning (paragraph C, social development), the rating of limitation must be done based upon the following five point scale: More than nine-tenths of chronological age; more than three-fourths but not more than nine-tenths of chronological age; more than two-thirds but not more than three-fourths of chronological age; more than one-half but not more than two-thirds of chronological age; and no more than one-half of chronological age. For the second facet of social functioning (paragraph D, social interaction), the

rating of limitation for each criterion in this area must be done based upon the following two point scale: Ability to achieve the stated criterion and inability or failure to achieve the criterion. For responsiveness to stimuli, the rating of limitation must be done based upon the following two point scale: Present and less than grossly excessive, and absent or grossly excessive. The last two points on the five point scales and the latter point on the two point scales represent a degree of limitation which is incompatible with the ability to perform the function or behavior in an age-appropriate manner.

(ii) For the second age group, age 1 to attainment of age 3, we have identified three areas of function: Motor development, cognitive/communicative function, and social function. The rating of limitation for each of these areas must be done based upon the same five point scale identified in paragraph (i) of this section. The last two points on each of these scales represent a degree of limitation which is incompatible with the ability to perform the function in an age-appropriate manner.

(iii) For the third age group, age 3 to attainment of age 18, we have identified four areas of function: Cognitive/communicative function, social functioning, personal/behavioral function, and task completion. The rating of limitation for each of these areas must be done based upon the following five point scale: None, mild, moderate, marked, and extreme. The last two points on each of these scales represent a degree of limitation which is incompatible with the ability to perform the function in an age-appropriate manner.

(5) For the first age group in the childhood criteria, birth to attainment of age 1, the rating scale points are defined as follows:

(i) Cognitive/communicative functioning, motor development, and the first facet of social functioning:

More than nine-tenths of chronological age—function or development is more than nine-tenths of the normal age-appropriate level;
More than three-fourths but not more than nine-tenths of chronological age—function or development is more than three-fourths, but not more than nine-tenths, of the normal age-appropriate level;
More than two-thirds but not more than three-fourths of chronological age—function or development is more than two-thirds, but not more than three-fourths, of the normal age-appropriate level;
More than one-half but not more than two-thirds of chronological age—function or development is more than one-third, but not more than two-thirds, of the normal age-appropriate level;
No more than one-half of chronological age—function or development is no more than one-half of the normal age-appropriate level.

(ii) Social interaction (the second facet):

Ability to achieve the stated criterion—the specified required function in the area is achieved;
Inability or failure to achieve the stated criterion—the specified required function in the area is not achieved.

(iii) Responsiveness to stimuli:

Present and less than grossly excessive—responses are present and not extremely in excess of normal for age;
Absent or grossly excessive—responses are nonexistent or extremely in excess of normal for age.

(6) For the second age group in the childhood criteria, age 1 to attainment of age 3, the rating scale points are defined the same as in paragraph (b)(5)(i) of this section.

(7) For the third age group in the childhood criteria, age 3 to attainment of age 18, the rating scale points are defined as follows:

(i) Cognitive/communicative function (IQs below reflect values from tests of general intelligence that have a mean of 100 and a standard deviation of 15):

None—a valid verbal, performance, or full scale IQ of 85 or above; and communicative function is within normal age-appropriate limits;
Mild—a valid verbal, performance, or full scale IQ of 76 through 84; or occassionally has difficulty in expressing feelings, needs, and preferences or in exchanging information and ideas in an age-appropriate manner;
Moderate—a valid, verbal, performance, or full scale IQ of 71 through 75; or frequently has difficulty in expressing feelings, needs, and preferences or in exchanging information and ideas in an age-appropriate manner;
Marked—a valid, verbal, performance, or full scale IQ of 60 through 70; or most of the time has difficulty in expressing feelings, needs, and preferences or in exchanging information and ideas in an age-appropriate manner;
Extreme—a valid, verbal, performance, or full scale IQ of 59 or less; or rarely able to express feelings, needs, and preferences or exchange information and ideas in an age-appropriate manner.

(ii) Social functioning:

None—social relationships are within normal age-appropriate range;
Mild—generally normal age-appropriate relationships with peers and adults, with occasional minor disruptions due to factors such as withdrawal, conflicts, inappropriateness, or aggressiveness; occasional minor conflicts at home (e.g., argument, theft within household), school (e.g., truant) or at work;
Moderate—limited age-appropriate relationships with peers and adults, with occasional serious disruptions due to factors such as withdrawal, conflicts, inappropriateness, or aggressiveness; occasional serious conflicts (e.g., with family, classmates, teachers, employers, or coworkers);
Marked—generally unable to maintain age-appropriate relationships with peer and adults, with frequent serious disruptions due to factors such as withdrawal, conflicts, inappropriateness, or aggressiveness; frequent serious conflicts (e.g., with family, classmates, teachers, employers, or coworkers);
Extreme—no ongoing age-appropriate relationships with peers and adults, with persistent serious disruptions due to factors such as withdrawal, conflicts, inappropriateness, or aggressiveness; persistent serious conflicts (e.g., with family, classmates, teachers, employers, or coworkers).

(iii) Personal/behavioral function:

None—personal/behavioral function is within normal age-appropriate limits;
Mild—occasionally unable to perform age-appropriate activities of daily living; or occasionally manifests episodes of minor maladaptive behavior;
Moderate—frequently unable to perform age-appropriate activities of daily living; or occasionally manifests episodes of serious maladaptive behavior;
Marked—most of the time unable to perform age-appropriate activities of daily living; or persistently manifests episodes of serious maladaptive behavior requiring protective intervention;
Extreme—rarely able to perform age-appropriate activities of daily living; or almost always manifests episodes of serious maladaptive behavior requiring protective intervention.

(iv) Task completion:

None—task completion is within normal age-appropriate limits;
Mild—occasionally unable to complete complex age-appropriate tasks (e.g., in school, recreational activities, or sports), but usually completes simple age-appropriate tasks;
Moderate—frequently unable to complete complex age-appropriate tasks and occasionally unable to complete simple age-appropriate tasks;
Marked—most of the time unable to complete complex age-appropriate tasks and frequently unable to complete simple age-appropriate tasks;
Extreme—unable to complete complex age-appropriate tasks and most of the time unable to complete simple age-appropriate tasks.

(c) *Use of the technique to evaluate mental impairments.* After rating the degree of functional limitation resulting from the impairment(s), we must determine the severity of the mental impairment(s).

(1) In the adult criteria, if the four areas considered by us as essential to work have been rated to indicate a degree of limitation as "none" or "mild" in the first three areas and "none" in the fourth area, we generally conclude that the impairment(s) is not severe, unless the evidence otherwise indicates there is more than a minimal limitation in your ability to do any basic work activity (see § 404.1521).

(2) In the childhood criteria, if all of the appropriate age group functional areas considered by us as essential to functioning in an age-appropriate manner have been rated to indicate a level of functioning or degree of limitation as "more than nine-tenths of chronological age," "more than three-fourths but not more than nine-tenths of chronological age," "present and less than grossly excessive," "ability to achieve stated criterion," "none," and "mild," we generally conclude that the impairment(s) is not severe, unless the evidence otherwise indicates there is more than a minimal limitation in your ability to function in an age-appropriate manner (see § 416.924).

(3) To determine if your mental impairment(s) meets or equals a listed mental disorder, we compare the diagnostic medical findings and the rating of functional limitations against the criteria of the appropriate listed mental disorder. The presence or absence of the criteria and the rating of functional limitation will be recorded on the standard document at the initial and reconsideration levels, or in the written decision at the administrative law judge hearing and Appeals Council levels (see paragraph (d) of this section).

(4) If the technique indicates that you have a severe impairment(s) that neither meets nor equals the listings, we must make a further functional assessment, when appropriate to the category of claim being assessed.

(d) *Documenting application of this technique.* To document application of the technique, a standard document must be completed by us in each case at the initial and reconsideration levels. At the administrative law judge hearing and Appeals Council levels (when the Appeals Council issues a decision), application of the technique must be documented in each case in the decision of the administrative law judge and the Appeals Council.

(1) At the initial and reconsideration levels our medical or psychological consultant must perform the evaluation and complete the standard document. The medical or psychological consultant may request the disability examiner, a member of the adjudicative team (see § 404.1615), to assist in completing the standard document. However, our medical or psychological consultant must sign the document to attest that he or she is responsible for its content. At the reconsideration disability hearing level, the decision must document application of the technique, incorporating the disability hearing officer's pertinent findings and conclusions based on this technique.

(2) At the administrative law judge hearing and Appeals Council levels, the written decision issued by the administrative law judge or Appeals Council must incorporate the pertinent findings and conclusions based on this technique. The decision must show the significant history, including examination and laboratory findings, and functional limitations that were considered in reaching conclusions about the severity of the mental impairment(s). The decision must include a specific finding as to the degree of functional limitation in each of the functional areas as described in paragraphs (b) (2) and (3) of this section (for adults) or paragraphs (b) (4) and (5), (6), or (7) of this section (for children).

(3) If the administrative law judge requires the services of a medical expert to assist in applying the technique but such services are unavailable, the administrative law judge may remand the case to the State agency or the Federal Disability Determination Service for completion of the standard document. If a favorable decision is possible, the case will be processed by the State agency or the Federal Disability Determination Service in accordance with § 404.941 (d) or (e), as appropriate. If a favorable decision is not possible, the case will be returned to the administrative law judge for a decision. (Also see § 404.948(c) for other situations involving possible remand.)

3. Appendix 1, subpart P is amended by revising the last sentence of the fifth paragraph of the introductory text to read as follows:

The mental disorders listing in part A will no longer be effective on (date to be inserted here which will be five years from the date of publication of the final regulations in the **Federal Register**), unless extended by the Secretary or revised and promulgated again.

4. Part A of Appendix 1 (Listing of Impairments) of subpart P is amended by removing the last sentence of paragraph B in the introductory text of listing 5.00, Digestive System.

5. Part A of appendix 1 (Listing of Impairments) of subpart P is amended by adding a new paragraph F to the end of the introductory text of listing 11.00, Neurological, to read as follows:

F. *Cerebral trauma.* The guidelines for evaluating impairments caused by cerebral trauma are contained in listing 11.18. Listing 11.18 states that cerebral trauma is to be evaluated under listing 11.02, 11.03, 11.04, or 12.02, as appropriate. Cases involving traumatic brain injury (TBI) are to be evaluated under listing 11.18.

TBI may result in neurological and mental impairments with a wide variety of post-traumatic symptoms and signs. The rate and extent of recovery can be highly variable and the long-term outcome may be difficult to predict in the first few months post-injury. Generally, the individual's neurological condition stabilizes more rapidly than the mental condition. In some cases, evidence of a profound neurological impairment is sufficient to permit a favorable decision within 3 months post-injury. Sometimes the mental impairment may appear to improve immediately following TBI and then worsen, or, conversely, it may appear much worse initially but improve after a few months. Therefore, mental findings immediately following TBI may not reflect the actual severity of the individual's mental impairment. The actual severity of the mental impairment may not become apparent until 6 months post-TBI. If a favorable decision within 3 months post-injury is not possible based on the neurological impairment, we will defer adjudication until we obtain evidence at least 3 months post-injury of the neurological and mental impairments. If a favorable decision still is not possible, we will defer final adjudication until we obtain evidence at least 6 months post-injury. At that time, we will fully evaluate the neurological and mental impairments and make a final adjudication.

6. Part A of appendix 1 (Listing of Impairments) of subpart P is amended by revising 12.00, Mental Disorders, to read as follows:

**12.00 Mental Disorders**

A. *Introduction:* The evaluation of disability on the basis of mental disorders requires documentation of a medically determinable impairment(s) as well as consideration of the degree of limitation such impairment(s) may impose on the individual's ability to work, and whether these limitations have lasted or are expected to last for a continuous period of at least 12 months. The listings for mental disorders are arranged in eight diagnostic categories: Organic mental disorders (12.02); schizophrenic, delusional (paranoid), schizoaffective, and other psychotic disorders (12.03); mood disorders (12.04); mental retardation, autistic disorder, and other pervasive developmental disorders (12.05); anxiety disorders (12.06); somatoform, eating, and tic disorders (12.07); personality disorders (12.08); and psychoactive substance dependence disorders (12.09). Each listing, except listing 12.05, consists of a statement describing the disorder(s) addressed by the listing and an accompanying set of medical findings (paragraph A criteria), which, if satisfied, lead to an assessment of impairment-related functional limitations (paragraph B criteria). There are additional considerations (paragraph C criteria) in

listings 12.02, 12.03, 12.04, and 12.08, discussed herein. Assessment under the paragraph B criteria must be done before applying the paragraph C criteria. An individual will be found to have a listed impairment when the criteria of both paragraphs A and B (or A and C, when appropriate) of the listed impairment are satisfied.

The purpose of the criteria in paragraph A is to substantiate medically the presence of a particular mental disorder. Specific symptoms, signs, and laboratory findings under any of the listings 12.02 through 12.09 cannot be considered in isolation from the description of the mental disorder contained at the beginning of paragraph A of each listing category. Impairments should be analyzed or reviewed under the mental category(ies) indicated by the medical findings. However, this does not preclude considering mental impairments under physical body system listings, using the concept of medical equivalence, when the mental disorder results in physical dysfunction. (See, for instance, 12.00D regarding the evaluation of anorexia nervosa and other eating disorders.)

The purpose of the criteria in paragraphs B and C is to describe impairment-related functional limitations which are incompatible with the ability to work. The functional restrictions in paragraphs B and C must be the result of the mental disorder which is manifested by the medical findings in paragraph A.

The structure of the listing for mental retardation, autistic disorder, and other pervasive developmental disorders (12.05) is different from that of the other mental disorders. Listing 12.05 contains an introductory paragraph with the diagnostic description for the disorders in the category. It also contains five sets of criteria (paragraphs A through E), any one of which, if satisfied together with the diagnostic description in the introductory paragraph, will result in a finding that the impairment meets the listing. Paragraphs A and B contain criteria that describe disorders considered severe enough to prevent a person from working without any additional assessment of functional limitations. For paragraph C, if the additional impairment being evaluated is another mental impairment, that impairment is subject to an assessment of functional limitations to determine if the additional limitations caused by that impairment are significant. Paragraphs D and E contain criteria which require an assessment of functional limitations.

The listings are so constructed that an individual meeting or equaling the criteria could not reasonably be expected to engage in gainful work activity. These listings contain examples of common mental disorders that are considered severe enough to render an individual disabled. When an individual has a medically determinable impairment that is not listed or a combination of impairments no one of which meets a listing, we will make an equivalency determination. (See §§ 404.1526 and 416.926.)

Individuals whose impairments do not meet or equal the criteria of the listings may or may not have the residual functional capacity (RFC) to engage in substantial gainful activity (SGA). The determination of mental RFC is crucial to the evaluation of an individual's capacity to engage in SGA when the criteria of the listings are not met or equaled but the impairment is nevertheless severe.

RFC is a multidimensional description of the work-related abilities an individual retains in spite of medical impairments. RFC complements the criteria in paragraphs B and C of the listings by requiring consideration of an expanded list of work-related capacities that may be impaired by mental disorders when the impairment is severe but does not meet or equal a listed mental disorder.

B. *Need for Medical Evidence:* The existence of a medically determinable impairment of the required duration must be established by medical evidence consisting of symptoms, signs, and laboratory findings (including psychological test findings). Symptoms are complaints presented by the individual. Psychiatric signs are medically demonstrable phenomena which indicate specific abnormalities of behavior, affect, thought, memory, orientation, and contact with reality, as described by an appropriate medical source, e.g., a psychiatrist or psychologist. Symptoms and signs generally cluster together to constitute recognizable mental disorders described in paragraph A of the listings. the symptoms and signs may be intermittent or continuous depending on the nature of the disorder.

c. *Assessment of Severity:* Severity is measured according to the functional limitations imposed by the medically determinable mental impairment. Functional limitations are assessed using the four criteria in paragraph B of the listings, which are: Activities of daily living, social functioning, task completion, and ability to tolerate increased mental demands associated with competitive work or other stressful circumstances. Where "marked" is used as a standard for measuring the degree of limitation it means more than moderate but less than extreme (see §§ 404.1520a and 416.920a). A marked limitation may arise when several activities or functions are impaired, or even when only one is impaired, as long as the degree of limitation is such as to interfere seriously with the ability to function independently, appropriately, effectively, and on a sustained basis.

1. *Activities of daily living* include adaptive activities such as cleaning, shopping, cooking, taking public transportation, paying bills, maintaining a residence, caring appropriately for one's grooming and hygiene, using telephones and directories, and using a post office. In the context of the individual's overall situation, the quality of these activities is judged by their independence, appropriateness, effectiveness, and sustainability. It is necessary to define the extent to which the individual is capable of initiating and participating in activities independent of supervision or direction.

"Marked" is not defined by a specific number of activities which are restricted, but by the nature and overall degree of restriction. For example, a person who does a wide range of daily activities might still have a marked restriction of daily activities if the person were not able to perform them independently.

2. *Social functioning* refers to an individual's capacity to interact appropriately, effectively, independently, and on a sustained basis with other individuals. Social functioning includes the ability to get along with others such as family members, friends, neighbors, grocery clerks, landlords, or bus drivers. Impaired social functioning may be demonstrated by, for example, a history of altercations, evictions, firings, fear of strangers, avoidance of interpersonal relationships, or social isolation. Strength in social functioning may be documented by, for instance, an individual's ability to initiate social contacts with others, communicate clearly with others, or interact and actively participate in group activities. Cooperative behaviors, consideration for others, awareness of others' feelings, and social maturity also need to be considered. Social functioning in work situations may involve interactions with the public, responding appropriately to persons in authority (e.g., supervisors), or cooperative behaviors involving coworkers.

"Marked" is not defined by a specific number of different behaviors in which social functioning is impaired, but by the nature and overall degree of interference with function. For example, a person who is highly antagonistic, uncooperative, or hostile but is tolerated by local storekeepers may nevertheless have a marked restriction in social functioning because that behavior is not acceptable in other social contexts.

3. *Task completion* refers to the ability to sustain focused attention and concentration sufficiently long to permit the timely completion of tasks commonly found in work settings. Difficulties in task completion are best observed in work and work-like settings For example, the ability to concentrate may be reflected in terms of ability to complete tasks in everyday household routines. Major limitation in this area can often be assessed through direct psychiatric examination and/or psychological testing, although mental status examination or psychological test data alone should not be used to describe concentration and sustained ability to adequately perform tasks in a work setting.

On mental status examinations, concentration is assessed by tasks such as having the individual subtract serial sevens from 100. In psychological tests of intelligence or memory, concentration is assessed through tasks requiring short-term memory or through tasks that must be completed within established time limits.

In work evaluations, task completion is assessed by testing an individual's ability to sustain work using appropriate production standards in either real or simulated work tasks. Strengths and weaknesses in areas of concentration and attention can be discussed in terms of ability to work at a consistent pace for acceptable periods of time and until

a task is completed, and ability to repeat sequences of action to achieve a goal or an objective.

4. *An episode of decompensation causing deterioration* refers to failure to adapt to stressful circumstances. This episode causes the individual to experience exacerbation of symptoms and/or signs, which lead to deterioration in the individual's functional level (which may include loss of adaptive functioning) as reflected by difficulties in maintaining activities of daily living, social relationships, and/or task completion. Stresses common to the work environment include decisions, attendance, schedules, completing tasks, and interacting with supervisors and peers.

D. *Documentation:* The presence of a mental disorder must be documented on the basis of reports from acceptable sources of medical evidence. See §§ 404.1513 and 416.913. Whenever possible, a medical source's findings should reflect the medical source's consideration of information from the individual himself or herself and other concerned individuals who are aware of the individual's activities of daily living, social functioning, task completion, and ability to tolerate increased mental demands (stress).

The individual usually can best describe his or her own functional limitations. The presence of a mental impairment does not automatically rule out the individual as a reliable source of such information. The individual's treating sources (e.g., psychiatrist, psychologist, mental health center), and other professional health care providers (e.g., psychiatric nurse, psychiatric social worker), when available, normally can provide valuable additional functional information. As necessary, information from nonmedical sources, such as family members and others who have knowledge of the individual, should also be used to supplement the record of the individual's functioning to establish the consistency of the medical evidence and longitudinality of impairment severity as discussed below.

An individual's level of functioning may vary considerably over time. The level of functioning at a specific time may seem relatively adequate or, conversely, rather poor. Proper evaluation of the impairment must take any variations in level of functioning into account in arriving at a determination of impairment severity over time. Thus, it is vital to obtain evidence from relevant sources over a sufficiently long period prior to the date of adjudication in order to establish the individual's impairment severity. This evidence should include treatment notes, hospital discharge summaries, and work evaluation or rehabilitation progress notes if these are available.

Some individuals may have attempted to work or may actually have worked during the period of time pertinent to the determination of disability. This may have been an independent attempt at work or it may have been in conjunction with a community mental health or other sheltered program which may have been of either short or long duration. Information concerning the individual's behavior during any attempt to work and the circumstances surrounding termination of the work effort are particularly useful in determining the individual's ability or inability to function in a work setting.

The use of consultative examinations employing psychometric testing is to be reserved for those situations in which the required documentation of a mental impairment cannot be obtained from other sources. In cases of alleged or suspected mental retardation or organic mental disorder, the results of intelligence tests may be needed to establish the existence and the extent of any compromise of cognitive functioning. A reference to standardized psychological testing indicates the use of a psychological test that has appropriate characteristics of validity, reliability, and norms, administered individually by a psychologist, psychiatrist, or other physician specialist qualified by training and experience to perform such an evaluation. Psychological tests are best considered as sets of tasks or questions designed to elicit particular behaviors when presented in a standardized manner.

The salient characteristics of a good test are: (1) Validity, i.e., the test measures what it is supposed to measure; (2) reliability, i.e., the consistency of results obtained over time with the same test and the same individual; (3) appropriate normative data, i.e., individual test scores must be comparable to recent test data from other individuals or groups of a similar nature, representative of that population; (4) wide scope of measurement, i.e., the test should measure a broad range of facets/aspects of the domain being assessed. In considering the validity of a test result, any discrepancies between formal test results and the individual's customary behavior and daily activities should be duly noted and resolved.

Tests meeting the above requirements are acceptable for the determination of the conditions contained in these listings. In addition, the psychologist, psychiatrist, or other physician specialist administering the test must have a sound technical and professional understanding of the test and be able to evaluate the research documentation related to the intended application of the test.

In special circumstances, such as the assessment of individuals with sensory, motor, or language abnormalities, nonverbal measures such as the Raven Progressive Matrices, Leiter International Performance Scale, or Peabody Picture Vocabulary Test may be used.

Psychological testing can also provide other useful data such as the examiner's observations regarding the individual's ability to sustain concentration and attention, relate appropriately to the examiner, or perform tasks independently (without prompts or reminders). Test results should, therefore, include both the objective data and a narrative description of clinical findings. Narrative reports of cognitive assessment should also comment on whether or not obtained IQ scores are considered to be valid and consistent with the individual's developmental history and degree of functional restriction.

Due to such factors as differing means and standard deviations, identical IQ scores obtained from different tests do not always reflect a similar degree of intellectual functioning. The IQ scores in listing 12.05 (Mental Retardation, Autistic Disorder, and Other Pervasive Developmental Disorders) reflect values from tests of general intelligence that have a mean of 100 and a standard deviation of 15, e.g., the Wechsler series and the revised Stanford-Binet scales. Thus, IQs below 60 reflect a level of intellectual functioning below 99.5 percent of the general population, and IQs of 70 and below are characteristic of approximately the lowest 2 percent of the general population. IQs obtained from standardized tests that deviate significantly from a mean of 100 and standard deviation of 15 require conversion to the corresponding percentile rank in the general population so that the actual degree of impairment reflected by the IQ scores can be determined. In cases where more than one IQ is customarily derived from the test administered, e.g., where verbal, performance, and full scale IQs are provided, as on the Wechsler series, the lowest of these is used in conjunction with listing 12.05.

Standardized intelligence test results are essential to the adjudication of all cases of mental retardation that are not covered under the provisions of listing 12.05A. Listing 12.05A may be the basis for adjudicating cases where the results of standardized intelligence tests are unavailable, e.g., where the individual's condition precludes formal standardized testing.

Personality measures (e.g., Minnesota Multiphapsic Personality Inventory, Millon Multiaxial Clinical Inventory) are not a substitute for symptoms, signs, and laboratory findings with direct work-related functional implications, which are obtained through a proper and comprehensive history and mental status examination. Such personality tests are based on self-report, focus on diagnostic and psychodynamic concerns, and do not express their results in terms of objective units of functional behavior. As such, they are of very limited applicability in the disability program. When evaluating the results of such tests, inference must be kept to an absolute minimum.

In conjunction with clinical examinations, sources may report the results of screening tests, i.e., tests used for gross determination of level of functioning. Some (e.g., the Bender Gestalt Test and the Kent EGY) measure only limited visual-motor or cognitive dimensions. These tests generally are not considered appropriate primary evidence for disability determinations. These screening instruments may be useful in uncovering potentially serious impairments, but generally must be supplemented by the use of formal, standardized psychological testing if the disability determination is to be made on the basis of psychological test data. There will be cases, however, in which the results of screening tests show such obvious abnormalities that further testing will clearly be unnecessary.

Projective types of techniques (e.g., Rorschach, Thematic Apperception Test, Draw-a-Person, House-Tree-Person) are not useful for program purposes. Such tests do not provide objective evidence of psychiatric symptoms and signs, do not generate results

in the form of objective units of functional behavior, are of uncertain reliability and validity in many usages and applications, and address primarily treatment rather than work-related issues. As such, they are unsuitable for use in the disability decisionmaking process.

Exceptions to formal standardized psychological testing may be considered when a psychologist, psychiatrist, or other physician specialist who is qualified by training and experience to perform such an evaluation is not readily available. In such instances, appropriate medical, historical, social, and other information must be reviewed in arriving at a determination.

Exceptions may also be considered in the case of ethnic or cultural minorities where the native language or culture is not principally English-speaking. In such instances, psychological tests that are culture-free, such as the Leiter International Performance Scale or the Scale of Multi-Cultural Pluralistic Assessment (SOMPA) may be substituted for the standardized tests described above. Any required tests must be administered in the individual's principal language, preferably by an examiner fluent in that language. If such an examiner is not available, the translation should be done by an independent interpreter, if possible, or, when necessary, an interpreter provided by the individual. In that event, the need for impartiality must be stressed. When testing in the individual's principal language is not possible, appropriate medical, historical, social, and other information must be reviewed in arriving at a determination. Furthermore, in evaluating mental impairments in individuals from a different culture, the best indicator of severity is often the level of adaptive functioning and how the individual performs activities of daily living and social functioning.

"Neuropsychological testing" refers to the assessment of higher cortical functions. This type of evaluation may be carried out using one of the commercially available comprehensive batteries, such as the Luria-Nebraska or Halstead-Reitan, or an assemblage of devices selected by the examiner as germanne to the referral issues. The professionals performing the examination and applying its findings in the disability decisionmaking process must be properly trained in this area of neuroscience.

A comprehensive neuropsychological examination will normally include assessment of literality, basic sensation and perception, motor speed and coordination, attention and concentration, visual-motor function, memory across verbal and visual modalities, receptive and expressive speech, higher-order linguistic operations, problem-solving, abstraction ability, and general intelligence (if not previously obtained). In addition, there should be a clinical interview or personality evaluation geared toward evaluating pathological features known to occur frequently in neurological disease and trauma, e.g., emotional lability, abnormality of mood, impaired impulse control, passivity and apathy, or inappropriate social behavior. Such a specialized examination should be purchased only when there is a clear and compelling need. Such purchase should be considered only after all other more direct avenues of obtaining the needed documentation have been exhausted.

A significant decrease from premorbid cognitive functioning may accompany organic mental disorder. The existence of such a decrease is evaluated by comparing recent standardized psychological examination results with available premorbid assessment findings. The significance of an alteration in psychometric performance is evaluated by applying the customary statistical formula for comparing test scores from the same measure and individual at two points in time.

Premorbid test scores for comparison are sometimes available from educational or training facilities as well as from treating psychological or medical sources. In the absence of premorbid evaluation, at times a significant difference between premorbid and current cognitive functioning can be reasonably inferred from the history of such factors as educational, social, and vocational attainment. There are several methods, based either on demographic variable or on the patterning of current test findings, which can be used to estimate premorbid cognitive status. These estimates, if made, must be made only by professionals properly trained and experienced in the meaning and assessment of intelligence.

In cases where the nature of the individual's cognitive impairment is such that standard intelligence tests as described above are precluded, medical reports specifically describing the level of cognitive, social, and physical function should be obtained. Actual observations by Social Security Administration or State agency personnel, reports from educational institutions, and information furnished by public welfare agencies or other reliable objective sources should be considered as additional evidence.

In cases involving traumatic brain injury, follow the evaluation guidelines in listing 11.00F (*Cerebral trauma*).

In cases involving agoraphobia and other phobic disorders, panic disorders, and post-traumatic stress disorders, documentation of the anxiety reaction is essential. At least one detailed description of the individual's typical reaction is required. The description should include the nature, frequency, and duration of any panic attacks or other reactions, the precipitating and exacerbating factors, and the functional effects. If the description is provided by a medical source, the reporting physician or psychologist should indicate the extent to which the description reflects his or her own observations and the source of any ancillary information. Testimony of other persons who have observed the individual may be used for this description if professional observation is not available.

In cases involving anorexia nervosa and other eating disorders, the primary manifestations may be mental or physical, depending on the nature and extent of the disorder. When the primary cause of functional limitation is physical, e.g., when severe weight loss and associated clinical findings are the chief cause of inability to work, the impairment may be evaluated under the appropriate physical body system listing. Of course, any mental aspects of the impairment also must be considered.

E. *Chronic Mental Impairments:* Particular problems are often involved in evaluating mental impairments in individuals who have long histories of repeated hospitalizations or prolonged outpatient care with supportive therapy and medication. For instance, individuals with chronic organic, psychotic, and mood disorders commonly have their lives structured in such a way as to minimize stress and reduce their symptoms and signs. Such individuals may be much more impaired for work than their symptoms and signs would indicate. The results of a single examination may not adequately describe these individuals' sustained ability to function. It is, therefore, vital to review all pertinent information relative to the individual's condition, especially at times of increased stress. It is mandatory to attempt to obtain adequate descriptive information from all sources which have treated the individual in the time period relevant to the decision.

F. *Effects of Structured Settings:* Particularly in cases involving chronic mental disorders, overt symtomatology may be controlled or attenuated by psychosocial factors such as placement in a hospital, halfway house, board and care facility, or other environment that provides similar structure. Highly structured and supportive settings also may be found in an individual's home. Such settings may greatly reduce the mental demands placed on an individual. With lowered mental demands, overt symptoms and signs of the underlying mental disorder may be minimized. At the same time, however, the individual's ability to function outside of such a structured or supportive setting may not have changed. An evaluation of an individual whose symptomatology is controlled or attenuated by psychosocial factors must consider the ability of the individual to function outside of such highly structured settings. [For these reasons, identical paragraph C criteria are included in listings 12.02, 12.03, and 12.04. The paragraph C criterion of listing 12.06 reflects the uniqueness of agoraphobia, an anxiety disorder manifested by an overwhelming fear of leaving the home.]

G. *Effects of Medication:* Attention must be given to the effect of medication on the individual's symptoms, signs, and ability to function. While psychoactive medications may control certain primary manifestations of a mental disorder, e.g., hallucinations, impaired attention, restlessness, or hyperactivity, such treatment may not affect all functional limitations imposed by the mental disorder. In cases where overt symptomatology is attenuated by the psychoactive medications, particular attention must be focused on the functional limitations which may persist. These functional limitations must be considered in assessing impairment severity. (See the paragraph C criteria in listings 12.02, 12.03, 12.04, and 12.06.)

Psychoactive medicines used in the treatment of some mental illnesses may cause drowsiness, blunted affect, or other side effects involving other body systems.

Such side effects must be considered in evaluating overall impairment severity. Where adverse effects of medications contribute to the impairment severity and the impairment does not meet or equal the listings but is nonetheless severe, such adverse effects must be considered in any further required functional assessment.

H. *Effect of Treatment:* With adequate treatment some individuals with chronic mental disorders not only have their symptoms and signs ameliorated but also return to a level of function close to that of their premorbid status. Treatment may or may not assist in the achievement of an adequate level of adaptation required in the work place. (See the paragraph C criteria in listings 12.02, 12.03, 12.04, and 12.06.)

I. *Technique for Reviewing Evidence in Mental Disorders Claims to Determine Level of Impairment Severity:* A special technique has been developed to ensure that all evidence needed for the evaluation of impairment severity in claims involving mental impairment(s) is obtained, considered, and properly evaluated. This technique is explained in §§ 404.1520a and 416.920a.

12.01 Category of Impairments, Mental

12.02 *Organic Mental Disorders:* The listing is met when the requirements in both A and B are satisfied, or when the requirements in both A and C are satisfied.

A. Abnormalities in perception, cognition, affect, or behavior associated with dysfunction of the brain. The history and physical examination or laboratory tests, including psychological or neuropsychological tests, demonstrate or support the presence of an organic factor judged to be etiologically related to the abnormal mental state and associated deficit or loss of specific cognitive abilities, or affective changes, or loss of previously acquired functional abilities, with medically documented persistence of at least one of the following:

1. Disorientation to time and place; or
2. Memory impairment, either short-term (inability to learn new information), intermediate, or long-term (inability to remember information that was known sometime in the past); or
3. Perceptual or thinking disturbances (e.g., hallucinations, delusions, illusions, or paranoid thinking); or
4. Disturbance in personality (e.g., apathy, hostility); or
5. Disturbance in mood (e.g., mania, depression); or
6. Emotional liability (e.g., sudden crying); or
7. Impairment of impulse control (e.g., disinhibited social behavior, explosive temper outbursts); or
8. Impairment of cognitive function, as measured by clinically timely standardized psychological testing; or
9. Disturbance of concentration, attention; or judgment;

and

B. Resulting in at least two of the following:

1. Marked restriction of activities of daily living; or
2. Marked difficulties in maintaining social functioning; or
3. Marked difficulties in completing tasks in a timely manner due to deficiencies in concentration, persistence, or pace; or
4. Repeated episodes of decomposition, averaging three times a year or once every four months, lasting two or more weeks each, which cause the individual to deteriorate (which may include loss of adaptive functioning);

or

C. Medically documented history of a chronic organic mental disorder of at least two years' duration, which has caused more than a minimal limitation of ability to do any basic work activity, with symptoms or signs currently attenuated by medication or psychosocial support, and one of the following:

1. Repeated episodes of decomposition, averaging three times a year or once every four months, lasting two or more weeks each, which cause the individual to deteriorate (which may include loss of adaptive functioning); or
2. Current history of one or more years' inability to function outside a highly supportive living arrangement with an indication of continued need for such arrangement.

12.03 *Schizophrenic, Delusional (Paranoid), Schizoaffective, and Other Psychotic Disorders:* The listing is met when the requirements in both A and B are satisfied, or when the requirements in both A and C are satisfied.

A. Onset of psychotic features, characterized by a marked disturbance of thinking, feeling, and behavior, with deterioration from a previous level of functioning, with medically documented persistence, for at least 6 months, either continuous or intermittent, of one of the following:

1. Delusions or hallucinations; or
2. Catatonic, bizarre, or other grossly disorganized behavior; or
3. Incoherence, loosening of associations, illogical thinking, or poverty of content of speech; or
4. Flat, blunt, or inappropriate affect; or
5. Emotional withdrawal, apathy, or isolation;

and

B. Resulting in at least two of the following:

1. Marked restriction of activities of daily living; or
2. Marked difficulties in maintaining social functioning; or
3. Marked difficulties in completing tasks in a timely manner due to deficiencies in concentration, persistence, or pace; or
4. Repeated episodes of decompensation, averaging three times a year or once every four months, lasting two or more weeks each, which cause the individual to deteriorate (which may include loss of adaptive functioning);

or

C. Medically documented history of a chronic schizophrenic, delusional, schizoaffective, or other psychotic disorder of at least two years' duration, which has caused more than a minimal limitation of ability to do any basic work activity, with symptoms or signs currently attenuated by medication or psychosocial support, and one of the following:

1. Repeated episodes of decomposition, averaging three times a year or once every four months, lasting two or more weeks each, which cause the individual to deteriorate (which may include loss of adaptive functioning); or
2. Current history of one or more years' inability to function outside a highly supportive living arrangement with an indication of continued need for such arrangement.

12.04 *Mood Disorders:* The listing is met when the requirements in both A and B are satisfied, or when the requirements in both A and C are satisfied.

A. A disturbance of mood (referring to a prolonged emotion that colors the whole psychic life, generally involving either depression or elation), accompanied by a full or partial manic or depressive syndrome, with medically documented persistence, either continuous or intermittent, of one of the following:

1. A major depressive syndrome, characterized by at least five of the following, which must include either depressed or irritable mood or markedly diminished interest or pleasure:
   a. Depressed or irritable mood; or
   b. Markedly diminished interest or pleasure in almost all activities; or
   c. Appetite or weight increase or decrease; or
   d. Sleep disturbance; or
   e. Psychomotor agitation or retardation; or
   f. Fatigue or loss of energy; or
   g. Feelings of worthlessness or guilt; or
   h. Difficulty thinking or concentrating; or
   i. Suicidal thoughts or acts; or
   j. Hallucinations, delusions, or paranoid thinking;

or

2. Manic syndrome, characterized by elevated, expansive, or irritable mood, and at least three of the following:
   a. Increased activity or psychomotor agitation; or
   b. Increased talkativeness or pressure of speech; or
   c. Flight of ideas or subjectively experienced racing thoughts; or
   d. Inflated self-esteem or grandiosity; or
   e. Decreased need for sleep; or
   f. Easy distractibility; or
   g. Involvement in activities that have a high potential of painful consequences which are not recognized; or
   h. Hallucinations, delusions, or paranoid thinking;

or

3. Bipolar or cyclothymic syndrome with a history of episodic periods manifested by the full symptomatic picture of both manic and depressive syndromes (and currently or most recently characterized by the full or partial symptomatic picture of either or both syndromes);

and

B. Resulting in at least two of the following:

1. Marked restriction of activities of daily living; or

2. Marked difficulties in maintaining social functioning; or
3. Marked difficulties in completing tasks in a timely manner due to deficiencies in concentration, persistence, or pace; or
4. Repeated episodes of decompensation, averaging three times a year or once every four months, lasting two or more weeks each, which cause the individual to deteriorate (which may include loss of adaptive functioning);

or

C. Medically documented history of a chronic mood disorder of at least two years' duration, which has caused more than a minimal limitation of ability to do any basic work activity, with symptoms or signs currently attenuated by medication or psychosocial support, and one of the following:

1. Repeated episodes of decompensation, averaging three times a year or once every four months, lasting two or more weeks each, which cause the individual to deteriorate (which may include loss of adaptive functioning); or
2. Current history of one or more years' inability to function outside a highly supportive living arrangement with an indication of continued need for such arrangement.

12.05 *Mental Retardation, Autistic Disorder, and Other Pervasive Developmental Disorders:* The listing is met when the following diagnostic definition and the requirements in A, B, C, D, or E are satisfied.

Mental retardation, i.e., significantly subaverage general intellectual functioning with deficits in adaptive functioning initially manifested during the developmental period (i.e., before age 18); or autistic disorder or other pervasive developmental disorders, i.e., qualitative deficits in reciprocal social interaction, verbal and nonverbal communication skills, and imaginative activity (and, with autistic disorder, also a markedly restricted repertoire of activities and interests, which frequently are stereotyped and repetitive), originating in the developmental period; with one of the following:

A. Mental incapacity evidenced by dependence upon others for personal needs (e.g., toileting, eating, dressing, or bathing) and inability to follow directions such that the use of standardized measures of intellectual functioning is precluded;

or

B. A valid verbal, performance, or full scale IQ of 59 or less;

or

C. A valid verbal, performance, or full scale IQ of 60 through 70 and a physical or other mental impairment imposing an additional and significant work-related limitation of function;

or

D. A valid verbal, performance, or full scale IQ of 60 through 70 and two of the following:

1. Marked restriction of activities of daily living; or
2. Marked difficulties in maintaining social functioning; or
3. Marked difficulties in completing tasks in a timely manner due to deficiencies in concentration, persistence, or pace; or
4. Repeated episodes of decompensation, averaging three times a year or once every four months, lasting two or more weeks each, which cause the individual to deteriorate (which may include loss of adaptive functioning);

or

E. Autistic disorder or other pervasive developmental disorders, resulting in two of the following:

1. Marked restriction of activities of daily living; or
2. Marked difficulties in maintaining social functioning; or
3. Marked difficulties in completing tasks in a timely manner due to deficiencies in concentration, persistence, or pace; or
4. Repeated episodes of decompensation, averaging three times a year or once every four months, lasting two or more weeks each, which cause the individual to deteriorate (which may include loss of adaptive functioning);

12.06 *Anxiety Disorders:* The listing is met when the requirements in both A and B are satisfied, or when the requirements in both A and C are satisfied.

A. Anxiety is either the predominant disturbance or is experienced if the individual attempts to master symptoms, e.g., confronting the dreaded object or situation in a phobic disorder or resisting the obsessions or compulsions in an obsessive compulsive disorder, with medically documented findings of at least one of the following:

1. Persistent unrealistic or excessive anxiety and worry (apprehensive expectation), accompanied by motor tension, autonomic hyperactivity, or vigilance and scanning; or
2. A persistent irrational fear of a specific object, activity, or situation which results in a compelling desire to avoid the dreaded object, activity, or situation; or
3. Recurrent severe panic attacks, manifested by a sudden unpredictable onset of intense apprehension, fear, or terror, often with a sense of impending doom, occurring on the average of once a week; or
4. Recurrent obsessions or compulsions which are a source of marked distress; or
5. Recurrent and intrusive recollections of a traumatic experience, including dreams, which are a source of marked distress;

and

B. Resulting in at least two of the following:

1. Marked restriction of activities of daily living; or
2. Marked difficulties in maintaining social functioning; or
3. Marked difficulties in completing tasks in a timely manner due to deficiencies in concentration, persistence, or pace; or
4. Repeated episodes of decompensation, averaging three times a year or once every four months, lasting two or more weeks each, which cause the individual to deteriorate (which may include loss of adaptive functioning);or

C. Resulting in complete inability to function independently outside the area of one's home.

12.02 *Somatoform, Eating, and Tic Disorders:* The listing is met when the requirements in both A and B are satisfied.

A. Physical symptoms for which there are no demonstrable organic findings or known physiologic mechanisms; or eating or tic disorders with physical manifestations, with medically documented findings of one of the following:

1. A history of multiple physical symptoms of several years' duration, beginning before age 30, that have caused the individual to take medicine frequently, see a physician often, and alter life patterns significantly; or
2. Persistent nonorganic disturbance of one of the following:
   a. Vision; or
   b. Speech; or
   c. Hearing; or
   d. Use of a limb; or
   e. Movement and its control (e.g., coordination disturbance, psychogenic seizures); or
   f. Sensation (diminished or heightened); or
   g. Digestion or elimination; or
3. Preoccupation with a belief that one has a serious disease or injury; or
4. An unrealistic fear and perception of fatness despite being underweight, and persistent refusal to maintain a body weight which is greater than 85 percent of the average weight for height and age, as shown in the most recent edition of the Metropolitan Height and Weight Tables; or
5. Persistent and recurrent involuntary, repetitive, rapid, purposeless motor movements affecting multiple muscle groups with multiple vocal tics;

and

B. Resulting in at least two of the following:

1. Marked restriction of activities of daily living; or
2. Marked difficulties in maintaining social functioning; or
3. Marked difficulties in completing tasks in a timely manner due to deficiencies in concentration, persistence, or pace; or
4. Repeated episodes of decompensation, averaging three times a year or once every four months, lasting two or more weeks each, which cause the individual to deteriorate (which may include loss of adaptive functioning).

12.08 *Personality Disorders:* The listing is met when the requirements in both A and B are satisfied.

A. Pervasive, inflexible, and maladaptive personality traits present since early adulthood, which are typical of the individuals's long-term functioning and not limited to discrete episodes of illness, as evidenced by deeply ingrained, maladaptive patterns of behavior, associated with one of the following:

1. Seclusiveness or autistic thinking; or
2. Pathologically inappropriate suspiciousness or hostility; or

3. Oddities of thought, perception, speech, and behavior; or
4. Persistent disturbances of mood or affect; or
5. Pathological dependence, passivity, or aggressiveness; or
6. Intense and unstable interpersonal relationships and impulsive and exploitative behavior; or
7. Pathological perfectionism and inflexibility; and

B. Resulting in at least two of the following:
1. Marked restriction of activities of daily living; or
2. Marked difficulties in maintaining social functioning; or
3. Marked difficulties in completing tasks in a timely manner due to deficiencies in concentration, persistence, or pace; or
4. Repeated episodes of decompensation, averaging three times a year or once every four months, lasting two or more weeks each, which cause the individual to deteriorate (which may include loss of adaptive functioning).

12.09 *Psychoactive Substance Dependence Disorders:* The listing is met when the requirements in both A and B are satisfied.

A. Psychoactive substance dependence disorder manifested by a cluster of cognitive, behavioral, and physiologic symptoms that indicate impaired control of psychoactive substance use, with continued use of the substance despite adverse consequences, with medically documented findings of at least four of the following:
1. Substance taken in larger amounts or over a longer period than intended by the person and a great deal of time is spent in recovering from its effects; or
2. Two or more unsuccessful efforts to cut down or control use; or
3. Frequent intoxication or withdrawal symptoms interfering with major role obligations; or
4. Continued use despite persistent or recurring social, occupational, psychological, or physical problems; or
5. Tolerance, as characterized by the requirement for markedly increased amounts of substance in order to achieve intoxication; or
6. Substance taken to relieve or avoid withdrawal symptoms;

and

B. Resulting in at least two of the following:
1. Marked restriction of activities of daily living; or
2. Marked difficulties in maintaining social functioning; or
3. Marked difficulties in completing tasks in a timely manner due to deficiencies in concentration, persistence, or pace; or
4. Repeated episodes of decompensation, averaging three times a year or once every four months, lasting two or more weeks each, which cause the individual to deteriorate (which may include loss of adaptive functioning).

7. Part B of appendix 1 (Listing of Impairments) of subpart P is amended by revising the third sentence of the first paragraph of 112.00C, and by adding a new sentence immediately following the revised third sentence in 112.00C, to read as follows:

The functional areas that we consider are: Motor function; cognitive/communicative function; social function; personal/behavioral function; and task completion. We also consider responsiveness to stimuli.

8. Part B of appendix 1 (Listing of Impairments) of subpart P is amended by revising the third sentence of the second paragraph of 112.00C to read as follows:

The severity of these disorders is based on measures of development in motor, cognitive/communicative, and social function and on the evaluation of response to stimuli.

9. Part B of appendix 1 (Listing of Impairments) of subpart P is amended by revising the first sentence of 112.00C.2 to read as follows:

For the age groups including preschool children through adolescence, the functional areas we consider are: (a) Cognitive/communicative function, (b) social function, (c) personal/behavioral function, and (d) difficulties in completing tasks in a timely manner due to deficiencies in concentration, persistence, or pace.

10. Part B of appendix 1 (Listing of Impairments) of subpart P is amended by revising the second sentence of 112.00C.2.a to read as follows:

A primary criterion for measuring cognitive function is a valid verbal, performance, or full scale IQ.

11. Part B of appendix 1 (Listing of Impairments) of subpart P is amended by revising the title of 112.00C.2.d to read as follows:

d. Difficulties in completing tasks in a timely manner due to deficiencies in concentration, persistence, or pace.

12. Part B of appendix 1 (Listing of Impairments) of subpart P is amended by revising the first sentence of the second paragraph of 112.00C.3 to read as follows:

As it applies to primary school children, the intent of the functional criterion described in B.2.d, i.e., difficulties in completing tasks in a timely manner due to deficiencies in concentration, persistence, or pace, is to identify the child who cannot adequately function in primary school because of a mental impairment. * * *

13. Part B of appendix 1 (Listing of Impairments) of subpart P is amended by revising the first sentence of 112.00C.4 to read as follows:

Functional criteria parallel to those for primary school children (cognitive/communicative; social; personal/behavioral; and difficulties in completing tasks in a timely manner due to deficiencies in concentration, persistence, or pace) are the measures of severity for this age group.

14. Part B of appendix 1 (Listing of Impairments) of subpart P is amended by revising paragraph B.2.d of listing 112.02 to read as follows:

d. Marked difficulties in completing tasks in a timely manner due to deficiencies in concentration, persistence, or pace.

15. Part B of appendix 1 (Listing of Impairments) of subpart P is amended by revising listing 112.12 to read as follows:

112.12 *Developmental and Emotional Disorders of Newborn and Younger Infants (Birth to attainment of age 1):* Developmental or emotional disorders of infancy are evidenced by a deficit or lag in the areas of motor, cognitive/communicative, or social functioning or by an abnormal response to stimuli. These disorders may be related either to organic or to functional factors or to a combination of these factors.

The required level of severity for these disorders is met when the requirements of A, B, C, D, E, or F are satisfied.

A. Cognitive/communicative functioning at a level generally acquired by children no more than one-half the child's chronological age, as documented by appropriate medical findings (e.g., in infants 0–6 months, markedly diminished variation in the production or imitation of sounds and severe feeding abnormality, such as problems with sucking, swallowing, or chewing) including, if necessary, a standardized test;

or

B. Motor development at a level generally acquired by children no more than one-half the child's chronological age, documented by appropriate medical findings, including if necessary, a standardized test;

or

C. Social development at a level generally acquired by children no more than one-half the child's chronological age, documented by appropriate medical findings, including, if necessary, a standardized test;

or

D. Failure to sustain social interaction on an ongoing, reciprocal basis as evidenced by:
1. Inability by 6 months to participate in vocal, visual, and motoric exchanges (including facial expressions); or
2. Failure by 9 months to communicate basic emotional responses, such as cuddling or exhibiting protest or anger; or
3. Failure to attend to the caregiver's voice or face or to explore an inanimate object for a period of time appropriate to the infant's age;

or

E. Attainment of development or function at a level generally acquired by children no more than two-thirds of the child's chronological age in two or more major areas of functioning (i.e., cognitive/communicative, motor, and social), documented by appropriate medical findings, including if necessary, standardized testing;

or

F. Apathy, over-excitability, or fearfulness, demonstrated by an absent or grossly excessive response to one of the following:

1. Visual stimulation; or
2. Auditory stimulation; or
3. Tactile stimulation.

## PART 416—SUPPLEMENTAL SECURITY INCOME FOR THE AGED, BLIND, AND DISABLED

For the reasons set out in the preamble, part 416, subpart I, chapter III of Title 20, Code of Federal Regulations, is amended as set forth below.

16. The authority citation for subpart I continues to read as follows:

Authority: Secs. 1102, 1614(a), 1619, 1631 (a) and (d)(1), and 1633 of the Social Security Act; 42 U.S.C. 1302, 1382c(a), 1382h, 1383 (a) and (d)(1), and 1383b; secs. 2, 5, 6, and 15 of Pub. L. 98-460, 98 Stat. 1794, 1801, 1802, and 1808.

17. Section 416.920a is revised to read as follows:

### § 416.920a Evaluation of mental impairments.

(a) *General.* The steps outlined in §§ 416.920 and 416.924 apply to the evaluation of physical and mental impairments. In addition, in evaluating the severity of mental impairments, we must follow a special technique at each administrative level or review. This will assist us in:

(1) Identifying the need for additional evidence for the determination of impairment severity;

(2) Considering and evaluating functional consequences of the mental disorder(s) relevant to adults and children; and

(3) Organizing and presenting the findings in a clear, concise, and consistent manner.

(b) *Use of the technique to record pertinent findings and rate the degree of functional limitation.* (1) We must evaluate the pertinent symptoms, signs, laboratory findings, functional limitations, and effects of treatment contained in your case record. (See § 416.908 for further information about what is needed to show an impairment.) If we determine that a medically determinable mental impairment(s) exists, we must specify the impairment(s) and the symptoms, signs, and laboratory findings that substantiate the presence of the impairment(s). Then we must rate the degree of functional limitation resulting from the impairment(s). The evidence must demonstrate that any limitation of functioning is the result of the mental impairment(s). When we rate the individual's (adult or child) degree of functional limitation, we must consider the individual's ability to function independently, appropriately, effectively, and on a sustained basis. When this rating is done for a child, it must be based upon age-appropriate expectations.

(2) In the adult criteria, we have identified four areas of function considered essential to work, and the degree of functional limitation in those areas must be rated on a scale that ranges from no limitation to a level of severity which is incompatible with the ability to perform those work-related functions. For the first three areas (activities of daily living; social functioning; and concentration, persistence, or pace), the rating of limitation must be done based upon the following five point scale: none, mild, moderate, marked, and extreme. For the fourth area (episodes of decompensation which cause the individual to deteriorate), the following four point scale must be used: None, one or two, three, four or more. The last two points on each of these scales represent a degree of limitation which is incompatible with the ability to perform the work-related function.

(3) For each of the first three functional areas in the adult criteria, the rating scale points are defined as follows:

(i) Activities of daily living:

None—activities are within normal range;
Mild—occasionally unable to perform activities;
Moderate—frequently unable to perform activities;
Marked—most of the time unable to perform activities;
Extreme—rarely able to perform activities.

(ii) Social functioning:

None—social relationships are within normal range;
Mild—generally normal relationships, with occasional minor disruptions due to factors such as withdrawal, conflicts, inappropriateness, or aggressiveness;
Moderate—limited relationships, with occasional serious disruptions due to factors such as withdrawal, conflicts, inappropriateness, or aggressiveness;
Marked—generally unable to maintain relationships, with frequent serious disruptions due to factors such as withdrawal, conflicts, inappropriateness, or aggressiveness;
Extreme—no ongoing relationships, with persistent serious disruptions due to factors such as withdrawal, conflicts, inappropriateness, or aggressiveness;

(iii) Task completion:

None—task completion is within normal limits;
Mild—occasional difficulty in completing complex tasks, but usually completes simple tasks;
Moderate—frequently may not be able to complete complex tasks without assistance or direction, and occasionally unable to complete simple tasks;
Marked—most of the time unable to complete complex tasks without assistance or direction, and frequently unable to complete simple tasks;
Extreme—unable to complete complex tasks, and most of the time unable to complete simple tasks.

(4) In the childhood criteria, we have identified three age groups, each with its own areas of function considered essential to functioning in an age-appropriate manner. Since a child's range of functions varies at different stages of maturation, the areas differ somewhat between age groups. The degree of functional limitation in each area in the appropriate age group must be rated on a scale that ranges from no limitation to a level of severity which is incompatible with the ability to perform those functions.

(i) For the first age group, birth to attainment of age 1, evaluated only under listing 112.12 (Developmental and Emotional Disorders of Newborn and Younger Infants), we have identified the following areas of function and behavior: Cognitive/communicative functioning; motor development; two facets of social functioning (paragraphs C and D of listing 112.12); and responsiveness to certain stimuli. For cognitive/communicative functioning, motor development, and the first facet of social functioning (paragraph C, social development), the rating of limitation must be done based upon the following five point scale: More than nine-tenths of chronological age; more than three-fourths but not more than nine-tenths of chronological age; more than two-thirds but not more than three-fourths of chronological age; more than one-half but not more than two-thirds of chronological age; and no more than one-half of chronological age. For the second facet of social functioning (paragraph D, social interaction), the rating of limitation for each criterion in this area must be done based upon the following two point scale: Ability to achieve the stated criterion and inability or failure to achieve the criterion. For responsiveness to stimuli, the rating of limitation must be done based upon the following two point scale: Present and less than grossly excessive, and absent or grossly excessive. The last two points on the five point scales and the latter point on the two point scales represent a degree of limitation which is incompatible with the ability to perform the function or behavior in an age-appropriate manner.

(ii) For the second age group, age 1 to attainment of age 3, we have identified

three areas of function: Motor development, cognitive/communicative function, and social function. The rating of limitation for each of these areas must be done based upon the same five point scale identified in paragraph (i) of this section. The last two points on each of these scales represent a degree of limitation which is incompatible with the ability to perform the function in an age-appropriate manner.

(iii) For the third age group, age 3 to attainment of age 18, we have identified four areas of function: Cognitive/communicative function, social functioning, personal/behavioral function, and task completion. The rating of limitation for each of these areas must be done based upon the following five point scale: None, mild, moderate, marked, and extreme. The last two points on each of these scales represent a degree of limitation which is incompatible with the ability to perform the function in an age-appropriate manner.

(5) For the first age group in the childhood criteria, birth to attainment of age 1, the rating scale points are defined as follows:

(i) Cognitive/communicative functioning, motor development, and the first facet of social functioning:

More than nine-tenths of chronological age—function or development is more than nine-tenths of the normal age-appropriate level;

More than three-fourths but not more than nine-tenths of chronological age—function or development is more than three-fourths, but not more than nine-tenths, of the normal age-appropriate level;

More than two-thirds but not more than three-fourths of chronological age—function or development is more than two-thirds, but not more than three-fourths, of the normal age-appropriate level;

More than one-half but not more than two-thirds of chronological age—function or development is more than one-half, but not more than two-thirds, of the normal age-appropriate level;

No more than one-half of chronological age—function or development is no more than one-half of the normal age-appropriate level.

(ii) Social interaction (the second facet):

Ability to achieve the stated criterion—the specified required function in the area is achieved;

Inability or failure to achieve the stated criterion—the specified required function in the area is not achieved.

(iii) Responsiveness to stimuli:

Present and less than grossly excessive—responses are present and not extremely in excess of normal for age;

Absent or grossly excessive—responses are nonexistent or extremely in excess of normal for age.

(6) For the second age group in the childhood criteria, age 1 to attainment of age 3, the rating scale points are defined the same as paragraph (b)(5)(i) of this section.

(7) For the third age group in the childhood criteria, age 3 to attainment of age 18, the rating scale points are defined as follows:

(i) Cognitive/communicative function (IQs below reflect values from tests of general intelligence that have a mean of 100 and a standard deviation of 15):

None—a valid verbal, performance, or full scale IQ of 85 or above; and communicative function is within normal age-appropriate limits;

Mild—a valid verbal, performance, or full scale IQ of 76 through 84; or occasionally has difficulty in expressing feelings, needs, and preferences or in exchanging information and ideas in an age-appropriate manner;

Moderate—a valid, verbal, performance, or full scale IQ of 71 through 75; or frequently has difficulty in expressing feelings, needs, and preferences or in exchanging information and ideas in an age-appropriate manner;

Marked—a valid, verbal, performance, or full scale IQ of 60 through 70; or most of the time has difficulty in expressing feelings, needs, and preferences or in exchanging information and ideas in an age-appropriate manner;

Extreme—a valid, verbal, performance, or full scale IQ of 59 or less; or rarely able to express feelings, needs, and preferences or exchange information and ideas in an age-appropriate manner.

(ii) Social functioning:

None—social relationships are within normal age-appropriate range;

Mild—generally normal age-appropriate relationships with peers and adults, with occasional minor disruptions due to factors such as withdrawal, conflicts, inappropriateness, or aggressiveness; occasional minor conflicts at home (e.g., argument, theft within household), school (e.g., truant) or at work;

Moderate—limited age-appropriate relationships with peers and adults, with occasional serious disruptions due to factors such as withdrawal, conflicts, inappropriateness, or aggressiveness; occasional serious conflicts (e.g., with family, classmates, teachers, employers, or coworkers);

Marked—generally unable to maintain age-appropriate relationships with peers and adults, with frequent serious disruptions due to factors such as withdrawal, conflicts, inappropriateness, or aggressiveness; frequent serious conflicts (e.g., with family, classmates, teachers, employers, or coworkers);

Extreme—no ongoing age-appropriate relationships with peers and adults, with persistent serious disruptions due to factors such as withdrawal, conflicts, inappropriateness, or aggressiveness; persistent serious conflicts (e.g., with family, classmates, teachers, employers, or coworkers).

(iii) Personal/behavioral function:

None—personal/behavioral function is within normal age-appropriate limits;

Mild—occasionally unable to perform age-appropriate activities of daily living; or occasionally manifests episodes of minor maladaptive behavior;

Moderate—frequently unable to perform age-appropriate activities of daily living; or occasionally manifests episodes of serious maladaptive behavior;

Marked—most of the time unable to perform age-appropriate activities of daily living; or persistently manifests episodes of serious maladaptive behavior requiring protective intervention;

Extreme—rarely able to perform age-appropriate activities of daily living; or almost always manifests episodes of serious maladaptive behavior requiring protective intervention.

(iv) Task completion:

None—task completion is within normal age-appropriate limits;

Mild—occasionally unable to complete complex age-appropriate tasks (e.g., in school, recreational activities, or sports), but usually completes simple age-appropriate tasks;

Moderate—frequently unable to complete complex age-appropriate tasks and occasionally unable to complete simple age-appropriate tasks;

Marked—most of the time unable to complete complex age-appropriate tasks and frequently unable to complete simple age-appropriate tasks;

Extreme—unable to complete complex age-appropriate tasks and most of the time unable to complete simple age-appropriate tasks.

(c) *Use of the technique to evaluate mental impairments.* After rating the degree of functional limitation resulting from the impairment(s), we must determine the severity of the mental impairment(s).

(1) In the adult criteria, if the four areas considered by us as essential to work have been rated to indicate a degree of limitation as "none" or "mild" in the first three areas and "none" in the fourth area, we generally conclude that the impairment(s) is not severe, unless the evidence otherwise indicates there is more than a minimal limitation in your ability to do any basic work activity (see § 416.921).

(2) In the childhood criteria, if all of the appropriate age group functional areas considered by us as essential to functioning in an age-appropriate manner have been rated to indicate a level of functioning or degree of limitation as "more than nine-tenths of chronological age," "more than three-fourths but not more than nine-tenths of chronological age," "present and less

than grossly excessive," "ability to achieve stated criterion," "none," and "mild," we generally conclude that the impairment(s) is not severe unless the evidence otherwise indicates there is more than a minimal limitation in your ability to function in an age-appropriate manner (see § 416.924).

(3) To determine if your mental impairment(s) meets or equals a listed mental disorder, we compare the diagnostic medical findings and the rating of functional limitation against the criteria of the appropriate listed mental disorder. The presence or absence of the criteria and the rating of functional limitation will be recorded on the standard document at the initial and reconsideration levels, or in the written decision at the administrative law judge hearing and Appeals Council levels (see paragraph (d) of this section).

(4) If the technique indicates that you have a severe impairment(s) that neither meets nor equals the listings, we must make a further functional assessment, when appropriate to the category of claim being assessed.

(d) *Documenting application of this technique.* To document application of the technique, a standard document must be completed by us in each case at the initial and reconsideration levels. At the administrative law judge hearing and Appeals Council levels (when the Appeals Council issues a decision), application of the technique must be documented in each case in the decision of the administrative law judge and the Appeals Council.

(1) At the initial and reconsideration levels our medical or psychological consultant must perform the evaluation and complete the standard document. The medical or psychological consultant may request the disability examiner, a member of the adjudicative team (see § 416.1015), to assist in completing the standard document. However, our medical or psychological consultant must sign the document to attest that he or she is responsible for its content. At the reconsideration disability hearing level, the decision must document application of the technique, incorporating the disability sharing officer's pertinent findings and conclusions based on this technique.

(2) At the administrative law judge hearing and Appeals Council levels, the written decision issued by the administrative law judge or Appeals Council must incorporate the pertinent findings and conclusions based on this technique. The decision must show the significant history, including examination and laboratory findings, and functional limitations that were considered in reaching conclusions about the severity of the mental impairment(s). The decision must include a specific finding as to the degree of functional limitation in each of the functional areas as described in paragraphs (b) (2) and (3) of this section (for adults) or paragraphs (b) (4) and (5), (6), or (7) of this section (for children).

(3) If the administrative law judge requires the services of a medical expert to assist in applying the technique but such services are unavailable, the administrative law judge may remand the case to the State agency or the Federal Disability Determination Service for completion of the standard document. If a favorable decision is possible, the case will be processed by the State agency or the Federal Disability Determination Service in accordance with § 416.1441 (d) or (e), as appropriate. If a favorable decision is not possible, the case will be returned to the administrative law judge for a decision. (Also see § 416.1448(c) for other situations involving possible remand.)

[FR Doc. 91-17001 Filed 7-17-91; 8:45 am]

BILLING CODE 4190-29-M

federal register

Thursday
July 18, 1991

# Part IV

# Department of Education

34 CFR Part 361

State Vocational Rehabilitation Services Program; Final Rule

**DEPARTMENT OF EDUCATION**

**34 CFR Part 361**

**RIN 1820-AA88**

## State Vocational Rehabilitation Services Program

**AGENCY:** Department of Education.

**ACTION:** Final Regulations.

**SUMMARY:** The Secretary amends the regulations implementing the State Vocational Rehabilitation (VR) Services Program authorized under title I of the Rehabilitation Act of 1973, as amended, in order to implement a technical amendment made to the maintenance of effort (MOE) provision of the Act by Pub. L. 100-630, the Handicapped Programs Technical Amendments Act of 1988, and to provide an additional circumstance in which a State can qualify for a waiver of the MOE requirement.

**EFFECTIVE DATE:** These regulations take effect either 45 days after publication in the **Federal Register** or later if the Congress takes certain adjournments. If you want to know the effective date of these regulations, call or write the Department of Education contact person. A document announcing the effective date will be published in the **Federal Register.**

**FOR FURTHER INFORMATION CONTACT:** Mark E. Shoob, Associate Commissioner, Office of Program Operations, Rehabilitation Services Administration, room 3036, Mary E. Switzer Building, 330 C Street SW., Washington, DC 20202-2574. Telephone (202) 732-1406 or TDD (202) 732-2848.

**SUPPLEMENTARY INFORMATION:** On January 29, 1991, the Secretary published a notice of proposed rulemaking for this program in the **Federal Register** (56 FR 3382).

These final regulations would update and revise the maintenance of effort (MOE) provisions in program regulations in 34 CFR 361.86 by implementing a technical amendment made to the MOE provision of the Rehabilitation Act by Public Law 100-630 (the Handicapped Programs Technical Amendments Act of 1988) and by providing an additional circumstance in which a State can qualify for a waiver of the MOE requirement.

The 1988 technical amendment changes the timing of the statutory remedy for MOE noncompliance, reduction of a State's allotment, from the fiscal year in which the violation occurred to the following fiscal year. When the allotment reduction remedy was enacted in 1986, it provided for a reduction to take place in the same fiscal year as the violation. Because the Department does not receive information from States about the amount of their non-Federal program expenditures until 90 days after the end of the fiscal year, the Department was unable to apply this remedy. The Department requested, and the Congress enacted, a technical amendment in 1988 that now provides for allotment reductions to be made in the fiscal year following the fiscal year in which a violation occurs. A State's current year allotment is reduced by the amount of State funds it underspent in the prior fiscal year. This statutory change allows the Department sufficient time to determine whether States met MOE in the preceding year, to review any waiver requests submitted by non-complying States, and, if necessary, to withhold a portion of any State's current year allotment. Although the Department has been applying this remedy since enactment of the technical amendment, these final regulations will now conform the program regulations to current statute and practice.

The final regulations also authorize the granting of a waiver in two instances: When exceptional or uncontrollable circumstances result in a general reduction of programs within the State, as currently permitted, or result in the vocational rehabilitation program incurring substantial expenditures for long-term purposes due to the one-time costs associated with construction or establishment of rehabilitation facilities, or the acquisition of equipment.

States must report to the Department all non-Federal expenditures under the State plan, including expenditures for construction and establishment projects. These expenditures are used to compute a State's required MOE level. Substantial expenditures for construction and establishment result in an increase in the State's MOE level that continues for several years, because of the three-year averaging provision for MOE computation. The MOE provision can act as a disincentive to States that construct and establish rehabilitation facilities needed for the conduct of the State rehabilitation program. Construction and establishment funds are included in the computation of a State's MOE level even if they are additional to or are raised outside of the normal sources of funding used to support the State program of services. For example, a State that constructs a large rehabilitation facility funded through a special bond issue must report these expenditures. This MOE provision also tends to have a negative effect upon States that conduct the VR program using higher proportions of State-owned and -operated rehabilitation facilities, because fluctuations in expenditures for construction and establishment are more likely to produce variations in MOE levels. Further, when construction and establishment expenditures cease and State overall expenditures fall below the required MOE level, Federal funds are required to be reduced. This reduction in funds has a negative impact on the client service delivery system.

The expanded waiver authority provided for in these final regulations will enable the Secretary, beginning in fiscal year 1991, to grant a waiver to any State that has failed to meet the MOE requirement in the prior fiscal year if that failure was caused by substantial capital expenditures made for the construction or establishment of rehabilitation facilities. The waiver provision applies to all construction and establishment costs that are allowable under Title I of the Rehabilitation Act and included in the calculation of maintenance of effort.

Except for minor editorial and technical revisions, there are no differences between the NPRM and these final regulations.

### Analysis of Comments and Changes

In response to the Secretary's invitation in the NPRM, 24 parties submitted comments on the proposed regulations: Twenty-two were from State vocational rehabilitation agencies that could be directly affected by the regulatory expansion of waiver authority; one was received from a national organization representing persons with disabilities; and one was from a State organization providing employment for persons who are blind. Twenty-two of the responses were favorable to the NPRM as published and suggested no changes; one response suggested that the Secretary further broaden the circumstances under which an MOE waiver could be provided; and one response was negative. Two State VR agency responses that were favorable to the NPRM, however, indicated a misunderstanding of the effect of the proposed regulatory changes.

An analysis of the comments and of the changes in the regulations since publication of the NPRM follows. Technical and other minor changes—and suggested changes the Secretary is not legally authorized to make under the applicable statutory authority—are not addressed.

*Comments:* Responses received from two State VR agencies indicate some

misunderstanding of the NPRM. One commenter concluded that the provision permitting the Secretary to waive MOE requirements for capital expenditures associated with the establishment and construction of rehabilitation facilities would also include expenditures associated with the construction of a State-owned office building. A second commenter mistakenly concluded that the regulations when finalized would permit establishment and construction expenditures to be excluded from the calculation of MOE.

*Discussion:* The NPRM provided that the purpose of the expanded waiver authority is to permit the Secretary to grant a waiver in any State that has failed to meet the MOE requirement in a prior fiscal year if that failure was caused by substantial capital expenditures made for the construction or establishment of rehabilitation facilities. The NPRM also provided that the statutory requirement that a State report to the Department all non-Federal expenditures under the State plan, including construction and establishment expenditures, for purposes of calculating MOE is unaffected. It is because construction and establishment expenditures are included in MOE that the Secretary is proposing additional waiver relief.

Costs associated with the construction of State office buildings are not expenditures eligible for Federal financial participation under Title I of the Rehabilitation Act. These costs cannot be reported as expenditures under the State plan for vocational rehabilitation services. Since these costs are neither allowable nor reported, they are not included in any State's MOE calculation and cannot be the basis for a waiver.

*Changes:* None.

*Comments:* On VR State agency asked that the MOE waiver authority be expanded to cover situations in which expenditures made by another State or local agency for the benefit of the VR program under a cooperative agreement decline or cease, the VR agency is unable to secure replacement funding, and as a result MOE is not met.

*Discussion:* Program regulations in 34 CFR 361.76 recognize expenditures made by other State or local agencies for the benefit of the VR program as a permissible source of funds to meet program matching requirements. While the Secretary recognizes that States sometimes have difficulty in securing sufficient sources or amounts of State funds to meet Federal matching requirements, the Secretary believes the VR program would be irreparably harmed if program regulations permitted MOE waivers to be granted whenever one or more sources of State funds decline or cease. The Secretary must ensure that a sufficient level of State funds are invested and continue to be invested in the VR program. Expanding the waiver authority on grounds suggested by the commenter would seriously undermine the MOE requirement and could lead to a marked reduction of overall expenditures for the VR program to the detriment of individuals with disabilities.

*Changes:* None.

*Comments:* One commenter opposed expanding the waiver authority as proposed by the NPRM, indicating that program funds should be spent for services to individuals rather than for buildings. The commenter further suggested that the expanded waiver authority would encourage or promote increased establishment and construction expenditures to the detriment of providing services to individuals.

*Discussion:*

The Secretary does not believe that establishing authority in the regulations to grant an MOE waiver on the basis of substantial one-time expenditures for construction and establishment will act as an incentive to promote unnecessary capital outlays. Rather, regulatory change will remove a disincentive for States who need to upgrade their rehabilitation facilities and have not done so because of its inflationary effect on MOE.

The Secretary believes there are adequate safeguards in the Rehabilitation Act and regulations to prevent excessive or unnecessary State capital expenditures and to ensure that services to individuals do not decline because of capital expenditures. First, program regulations in 34 CFR 361.21 and 361.22 require States to use existing rehabilitation facilities to the maximum extent possible and to establish and maintain rehabilitation facilities plans that document the need for new or expanded facilities before expenditures for these purposes are made. A State's rehabilitation facilities plan must be developed with the active participation of a representative group of providers and recipients of VR services and must be available to the public for review and inspection. Second, section 101(a)(17) of the Act limits the Federal share of construction costs under this program to no more than 10 percent of a State's allotment and further provides that, if a States does construct rehabilitation facilities, it must not reduce its efforts in providing VR services other than construction and establishment. Program regulations in 34 CFR 361.85(d) require that States that make capital expenditures maintain State effort for services to individuals at least equal to the average of those expenditures for the three preceding fiscal years.

*Changes:* None.

**Executive Order 12291**

These regulations have been reviewed in accordance with Executive Order 12291. They are not classified as major because they do not meet the criteria for major regulations established in the order.

**Intergovernmental Review**

This program is subject to the requirements of Executive Order 12372 and the regulations in 34 CFR part 79. The objective of the Executive order is to foster an intergovernmental partnership and a strengthened federalism by relying on processes developed by State and local governments for coordination and review of proposed Federal financial assistance.

In accordance with the order, this document is intended to provide early notification of the Department's specific plans and actions for this program.

**List of Subjects in 34 CFR Part 361**

Administrative practice and procedure, Education, Grant programs—education, Grant programs—social programs, Reporting and recordkeeping requirements, Vocational Rehabilitation.

(Catalog of Federal Domestic Assistance Number 84.126, State Vocational Rehabilitation Services Program)

Dated: May 22, 1991.

**Lamar Alexander,**

*Secretary of Education.*

The Secretary amends part 361 of title 34 of the Code of Federal Regulations as follows:

## PART 361—THE STATE VOCATIONAL REHABILITATION SERVICES PROGRAM

1. The authority citation for part 361 continues to read as follows:

**Authority:** 29 U.S.C. 711(c), unless otherwise noted.

2. Section 361.86 is revised to read as follows:

**§ 361.86 Payments from allotments for vocational rehabilitation services.**

(a) Except as provided in § 361.85(d), the Secretary pays to each State an amount computed in accordance with the requirements of section 111 of the Act. For fiscal years 1987 and 1988, the Federal share for each State is 80 percent, except for the cost of

construction of rehabilitation facilities. Beginning in fiscal year 1989, the Federal share for each State decreases by one percent per year for five years for funds received in excess of the amount received in fiscal year 1988. The Federal share of these excess payments is 79 percent in fiscal year 1989; 78 percent in fiscal year 1990; 77 percent in fiscal year 1991; 76 percent in fiscal year 1992; and 75 percent in fiscal year 1993, except for the cost of construction of rehabilitation facilities.

(b)(1) In fiscal year 1990 and each subsequent fiscal year, the Secretary reduces amounts otherwise payable to a State under this section for that fiscal year if the State's expenditures from non-Federal sources, as specified in § 361.76, under the State's approved plan for vocational rehabilitation services for the prior fiscal year, are less than—

(2) The average of the State's total expenditures from non-Federal sources for the three fiscal years preceding that prior fiscal year.

(c) Any reduction in a State's allotment is equal to the amount by which the expenditures specified in paragraph (b)(1) of this section are less than the average expenditures specified in paragraph (b)(2) of this section.

(d) Expenditures from non-Federal sources referred to in paragraph (b) of this section do not include expenditures from non-Federal sources required to receive payments under subpart F of this part.

(e)(1) The Secretary may waive or modify any requirement or limitation in section 111(a)(2) (A) and (B) of the Act, if the Secretary determines that a waiver or modification of the State maintenance of effort requirement is necessary to permit the State to respond to exceptional or uncontrollable circumstances, such as a major natural disaster or a serious economic downturn, that—

(i) Cause significant unanticipated expenditures or reductions in revenue; and

(ii)(A) Result in a general reduction of programs within the State; or

(B) Result in the State making substantial expenditures in the vocational rehabilitation program for long-term purposes due to the one-time costs associated with construction or establishment of rehabilitation facilities, or the acquisition of equipment.

(2) A written request for waiver or modification, including supporting justification, must be submitted to the Secretary as soon as the State determines that an exceptional or uncontrollable circumstance will prevent it from making its required expenditures from non-Federal sources.

(f) If a reduction in payments for any fiscal year is required in the case of a State where separate agencies administer, or supervise the administration of, the part of the plan under which vocational rehabilitation services are provided for blind individuals and the rest of the plan, the reduction is made in direct relation to the amount by which expenditures from non-Federal sources under each part of the plan are less than they were under that part of the plan for the average of the total of those expenditures for the three preceding fiscal years.

(Approved by the Office of Management and Budget under control number 1820-0587.)

(Authority: 29 U.S.C. 706(7), 711(c), and 731)

[FR Doc. 91-17083 Filed 7-17-91; 8:45 am]

BILLING CODE 4000-01-M

federal register

Thursday
July 18, 1991

# Part V

# Department of the Interior

## Office of Surface Mining Reclamation and Enforcement

## 30 CFR Parts 740, 761 and 772

## Federal Lands Program; Areas Unsuitable for Mining; Areas Designated by Act of Congress; Requirements for Coal Exploration; Proposed Rule

**DEPARTMENT OF THE INTERIOR**

**Office of Surface Mining Reclamation and Enforcement**

**30 CFR Parts 740, 761 and 772**

**RIN 1029-AB42**

# Federal Lands Program; Areas Unsuitable for Mining; Areas Designated by Act of Congress; Requirements for Coal Exploration

**AGENCY:** Office of Surface Mining Reclamation and Enforcement, Interior.

**ACTION:** Proposed rule.

**SUMMARY:** The Office of Surface Mining Reclamation and Enforcement (OSM) is proposing to amend those portions of its permanent program regulations at 30 CFR part 761 which address the circumstances which constitute valid existing rights (VER) to mine coal in areas where Congress has otherwise prohibited mining under Section 522(e) of the Surface Mining Control and Reclamation Act of 1977. OSM is undertaking this action in response to a District Court decision in Round III of the litigation on OSM's permanent program regulations. Specifically, OSM is proposing for review and comment the following standard for VER: VER would exist when an applicant for a permit to conduct surface coal mining operations has obtained, or has made a good faith effort to obtain, all necessary permits, or the application of the Section 522(e) prohibitions would effect a compensable taking of the property covered by the application. The proposed rule would reorganize the existing rule for clarity and would change OSM's VER determination procedures. OSM is proposing to change the Federal lands program to indicate that OSM will make VER determinations affecting Federal lands within the boundaries of Section 522(e) (1) and (2) areas using the Federal regulatory definition of VER. OSM is also proposing to require VER for coal exploration where the coal will be commercially used or sold.

**DATES:** *Written comments:* OSM will accept written comments on the proposed rules until 5 p.m. eastern time on September 16, 1991.

*Public hearings:* Upon request, OSM will hold public hearings on the proposed rules within the comment period. OSM will accept requests for hearings until 5 p.m. eastern time on August 15, 1991.

Individuals wishing to attend but not testify at any hearing should contact the person identified under "**FOR FURTHER INFORMATION CONTACT**" beforehand to verify that the hearing will be held.

**ADDRESSES:** *Written comments:* Hand-deliver to the Office of Surface Mining Reclamation and Enforcement, Administrative Record Room 5131L, 1100 L Street, NW., Washington, DC, or mail to the Office of Surface Mining Reclamation and Enforcement, Administrative Record, room 5131L, U.S. Department of the Interior, 1951 Constitution Avenue, NW., Washington, DC 20240

*Public hearings:* The addresses and times for any hearings which may be scheduled will be announced prior to the hearings.

*Requests for public hearings:* Submit requests orally or in writing to the person and address specified under "**FOR FURTHER INFORMATION CONTACT**" by the time specified under "**DATES.**"

**FOR FURTHER INFORMATION CONTACT:** Patrick W. Boyd, Branch of Federal and Indian Programs, Office of Surface Mining Reclamation and Enforcement, U.S. Department of the Interior, 1951 Constitution Avenue, NW., Washington, DC 20240; telephone (202) 208-2564 or 268-2564 (FTS).

**SUPPLEMENTARY INFORMATION:**

I. Public Comment Procedures
II. Discussion of Proposed Rule
A. Background
B. Discussion of Proposed Rule
C. Environmental Impact Statement and Regulatory Impact Analysis
D. Effect in Federal Program States and on Indian Lands
III. Procedural Matters

## I. Public Comment Procedures

### *Written Comments*

Written comments submitted on the proposed rules should be specific, should be confined to issues pertinent to the proposed rules, and should explain the reason for any recommended change. Where practicable, commenters should submit five copies of their comments (see "**ADDRESSES**"). Comments received after the close of the comment period (see "**DATES**") may not be considered or included in the Administrative Record for the final rules.

### *Public Hearings*

OSM will hold public hearings on the proposed rules upon request only. If only one person expresses an interest, a public meeting rather than a hearing may be held and the results included in the Administrative Record.

If a hearing is held, it will continue until all persons wishing to testify have been heard. To assist the transcriber and ensure an accurate record, OSM requests that persons who testify at a hearing give the transcriber a written copy of their testimony. To assist OSM in preparing appropriate responses, OSM also requests that persons who plan to testify submit to OSM, at the address previously specified for the submission of written comments (see "**ADDRESSES**"), an advance copy of their testimony.

## II. Discussion of Proposed Rule

### *A. Background*

Section 522(e) of the Surface Mining Control and Reclamation Act of 1977 (30 U.S.C. 1201 *et seq.*) (SMCRA or the Act) prohibits surface coal mining operations in certain areas, subject to valid existing rights and except for those operations which existed on August 3, 1977. Lands designated by Section 522(e)(1) include any lands within the boundaries of units of the National Park System, the National Wildlife Refuge System, the National System of Trails, the National Wilderness Preservation System, the Wild and Scenic Rivers System, including study rivers designated under Section 5(a) of the Wild and Scenic Rivers Act and National Recreation Areas designated by Act of Congress. Lands designated by Section 522(e)(2), (3), (4), and (5) include Federal lands within National Forests, publicly owned parks, properties listed on the National Register of Historic Places, 100-foot buffer zones around public roads and cemeteries, and 300-foot buffer zones around occupied dwellings, public buildings, schools, churches, community or institutional buildings, and public parks.

The term "valid existing rights" is not defined in SMCRA. The legislative history "does suggest that Congress did not intend to infringe on valid property rights or effect takings through Section 522(e)." *National Wildlife Federation* v. *Hodel*, (D.C. Cir. 1988) 839 F. 2d 694, 750 (hereafter *NWF* v. *Hodel*).

The following discussion relates the history of the major provisions in the current rule for which OSM is proposing substantive revisions. Other provisions are discussed only in section B, Discussion of Proposed Rule. That section also discusses the proposed reorganization of the rule.

Section 761.5(a)—Definition of "valid existing rights"

OSM first defined VER in 1979 as those property rights in existence on August 3, 1977, the owners of which either had obtained all necessary mining permits on or before August 3, 1977 or could demonstrate that the coal for

which the exemption was sought was both needed for, and immediately adjacent to, a mining operation in existence prior to August 3, 1977. 30 CFR 761.5(a), 44 FR 14902, 15342 (March 13, 1979).

On judicial review, the court remanded to the Secretary that portion of the definition requiring the property owner to have obtained all permits necessary to mine. Specifically, the court indicated that "a good faith attempt to have obtained all permits before the August 3, 1977 cut-off date should suffice for meeting the all permits test." In re Permanent Surface Mining Regulation Litigation I, No. 79-1144 (D.D.C. Feb. 26, 1980), 14 ERC 1083, 1091 (hereafter PSMRL I, Round I). To comply with this opinion, OSM suspended the definition insofar as it required that all permits must have been obtained prior to August 3, 1977. 45 FR 51547, 51548 (August 4, 1980). The notice of suspension stated that, pending further rulemaking, OSM would interpret the regulation as including the court's suggestion that a good faith effort to obtain all permits would establish VER. This standard has become known as the "good faith/all permits" test.

On June 10, 1982, OSM proposed three major options for revising the definition of VER, including a "good faith/all permits" test, and three alternatives which were variations of the principal options. 47 FR 25278. All of the proposed options were attempts to identify in a straightforward manner the class or classes of circumstances which would operate to establish VER under Section 522(e). These tests are referred to as "mechanical" tests. Commenters on the proposed rule criticized each option as either too broad or too narrow, and many raised the issue of taking without compensation on one or more of the proposed options. These comments led OSM to examine the case law applying to "just compensation" clause of the Fifth Amendment. As a result of that examination, OSM stated that "because the courts refuse to prescribe set formulas for takings, OSM is convinced that it cannot specifically delineate a class of circumstances with the assurance that the class is neither overinclusive nor underinclusive of all potential takings which might result from Section 522(e) prohibitions." 48 FR 41314 (September 14, 1983). Therefore, on September 14, 1983, OSM promulgated a broad definition of VER which relied on a general "takings" standard. 48 FR 41349.

On judicial review, the court held that the broad takings standard represented such a significant departure from the mechanical tests of the proposed rule that a new notice and comment period was necessary. In re Permanent Surface Mining Regulation Litigation II, Round III-VER, No 79-1144 (D.D.C. Mar. 22, 1985), 22 ERC 1557, 1564 (hereafter PSMRL II, Round III-VER). Accordingly, the court held that the promulgation of the VER definition in 30 CFR 761.5(a) violated the Administrative Procedure Act (APA), 5 U.S.C. 553, and remanded the definition to the Secretary for proper notice and comment. In response to this order, OSM suspended the definition of VER in 30 CFR 761.5(a). 51 FR 41961 (November 20, 1986).

The suspension generally had the effect of reinstating the VER test in use before the 1983 definition was promulgated. That test was the 1979 test, including the "needed for and adjacent to" test, as modified by the August 4, 1980, suspension notice which implemented the District Court's suggestion that a good faith effort to obtain all permits would establish VER. Accordingly, OSM has been making VER determinations in Federal program States and on Indian lands using the 1980 test.

Under 30 CFR 740.4(a)(4) and 745.13(o), the Secretary is responsible for making VER determinations on Federal lands within the boundaries of any areas identified in section 522(e)(1) or (e)(2) of the Act. In primacy States, 30 CFR 740.11(a) makes the provisions of approved State programs applicable to Federal lands within the State. Therefore, OSM has been applying State program definitions of VER on Federal lands in States with approved regulatory programs, except in States where the State program provides for a "takings" test. In those States, Illinois and West Virginia, OSM decided that it would not process VER applications within units of the National Park System until a Federal VER definition is promulgated. This decision was based on National Park Service concerns over potential impacts on such units. Since this decision was announced in the 1986 suspension notice, OSM has received two VER requests involving National Park system lands located in West Virginia, and has not made a final decision on either of the requests.

On December 27, 1988, OSM proposed two options for the regulatory definition of VER: (1) VER exists when an applicant for a permit to conduct surface coal mining operations has, or has made a good faith effort to obtain, all necessary permits; or (2) VER exists when an applicant has a legal right to the coal resource and has authority to mine by the method intended, as determined by State laws. 53 FR 52374. The first option, the good faith/all permits test, was described by OSM in the proposal as being similar to the 1979 all permits test, except for incorporation of the court's belief "that a good faith effort to obtain all permits before the August 3, 1977, cut-off date should suffice for meeting the all permits test." PSMRL I, Round I, 14 ERC 1091. The proposal indicated that applying for all necessary permits prior to the date the section 522(e) prohibitions came into effect would amount to a good faith effort.

The second option, the ownership and authority test, would have required a VER claimant to demonstrate the necessary property rights to allow mining by the proposed method, either surface or underground. This test would have involved an evaluation of property rights through consideration of the provisions of State property law as they apply to each particular situation. The ownership and authority test would not have depended upon any attempt by the holder of the rights to exercise them by any particular cut-off date. In the face of overwhelmingly negative public reaction to this option, OSM withdrew the proposed rule for further study on July 21, 1989. 54 FR 30557.

Section 761.5(c)—"Needed for and adjacent to" test

In its permanent program rules promulgated at 30 CFR 761.5(a)(2)(ii) on March 13, 1979, OSM introduced a provision known as the "needed for and adjacent to" test for determining VER. 44 FR 14902, 15342. Any person who had property rights in existence on August 3, 1977, and who could demonstrate to the regulatory authority that the coal in question was both needed for, and immediately adjacent to, an on-going surface coal mining operation for which all permits were obtained prior to August 3, 1977, would have VER under this test. Plaintiffs in PSMRL I, Round I, objected to the provision as unduly expanding the concept of valid existing rights. The court found that the "need and adjacent" component of the rules was consistent with Supreme Court decisions regarding taking of property, and determined that it was a rational method of allowing mining when denial would gravely diminish the value of the entire mining operation, thereby constituting a taking under Supreme Court declarations. PSMRL I, Round I, 14 ERC 1091.

On September 14, 1983, OSM issued a final rule that contained substantially the same wording as the 1979 "needed for and adjacent to" test, but from which

the requirement that the operator had to have had a right to the coal for which the exemption was sought prior to August 3, 1977, was removed. 30 CFR 761.5(c) (1984), 48 FR 41315–41316. The 1983 rule also provided that "needed for" meant that the extension of mining was essential to make the surface coal mining operation as a whole economically viable.

Upon review, the court found that the rule as promulgated in 1983 provided a right to guard the economic viability of one's land by finding a taking when the government refuses to permit a new acquisition. Before reaching the merits of such a standard, the court concluded that nothing in the proposed rule suggested such an extension of the "needed for and adjacent to" test. PSMRL II, Round III-VER, 22 ERC 1566–7. The court therefore remanded the test to the Secretary for notice and comment in accordance with the APA. In order to comply with the court's opinion, OSM suspended paragraph (c) of the definition of VER in 30 CFR 761.5. 51 FR 41961 (November 20, 1986). This had the effect of returning to the "needed for and adjacent to" test as promulgated in 1979.

In December 27, 1988, proposed rule concerning the definition of VER, OSM would have reinstated the requirement in the 1979 rule that the property rights in question must have been in existence on August 3, 1977, or as of the date of prohibitions became effective. 53FR 52374. OSM also proposed to remove the definition of "needed for" that was contained in the 1983 rule because it did not help clarify the intent or application of the test. However, the proposed rule was withdrawn for further study on July 21, 1989. 54 FR 30557.

Section 761.5(d)—Valid existing rights where prohibitions come into effect after August 3, 1977

Paragraph 761.5(d) was first promulgated on September 14, 1983. 48 FR 41312, 41349. It provides for situations where areas come under the protection of Section 522(e) after August 3, 1977. This provision has been called "continually created VER," and was intended to protect existing property interests where land came under the protection of Section 522(e) sometime after the date SMCRA was passed. For example, if Congress were to designate a new National Forest or National Park, this provision would protect property interests that existed on the date the park or forest was created. Similarly, if after August 3, 1977, someone were to construct a home, highway, or any other feature or facility protected by Section 522(e), the provision would protect all property interests that existed on the date the new Section 522(e) protections came into existence.

Section 761.5(d)(1) provides that VER shall be found if on the date the protection comes into existence, a validly authorized surface coal mining operation exists on that area. Section 761.5(d)(2), now suspended, provided that VER shall be found if the prohibition as applied to the property interest would effect a taking which would require compensation under the Fifth or Fourteenth Amendments to the Constitution. In effect, then, § 761.5(d)(2) depended upon the "takings" definition of VER promulgated in § 761.5(a) in 1983, discussed above.

In PSMRL II, Round III–VER, the court upheld the basic concept of "continually created VER," but remanded for further notice and comment that portion of the regulation (§ 761.5(d)(2)) which incorporated the takings test of § 761.5(a). 22 ERC 1564. In order to comply with the courts decision, OSM suspended paragraph (d)(2) of the definition of VER in 30 CFR 761.5. 51 FR 41961 (November 20, 1986). However, since paragraph (d)(1) was not suspended, there is still a provision that VER exists where an area comes under the protection of Section 522(e) of the Act after August 3, 1977, if a validly authorized surface coal mining operation exists on that area on the date the prohibition against mining comes into existence. As expressed in § 761.5(d)(1), the concept of "continually created VER" was upheld in *NWF* v. *Hodel*, 839 F.2d 694, 748.

The December 27, 1988, proposal would have incorporated the "continually created VER" concept into both the options for the regulatory definition of VER, as well as the proposed changes to the "needed for and adjacent to" test. However, as noted above, this proposal was withdrawn for further study on July 21, 1989. 54 FR 30557.

Section 761.11(h)—Areas where mining is prohibited or limited

Section 761.11(h) was promulgated on September 14, 1983 in response to numerous comments from persons concerned that mining or drilling would occur in National Parks or other areas protected under Section 522(e)(1) of the Act. 48 FR 41312, 41349. Section 761.11(h) provides:

> There will be no surface coal mining, permitting, licensing, or exploration of *Federal lands* in the National Park System, National Wildlife Refuge System, National System of Trails, National Wilderness Preservation System, Wild and Scenic Rivers System, or National Recreation Areas, unless called for by Acts of Congress. (Emphasis added.)

The District Court held that there appeared to be no rational basis for distinguishing between Federal and non-Federal lands in this context since Section 522(e)(1) prohibits, subject to VER and except for operations existing on August 3, 1977, surface coal mining operations on *any lands* within the statutorily protected areas. PSMRL II, Round III–VER, 22 ERC 1565. The court remanded the rule for lack of proper notice and comment under the APA. In response to the court's order, OSM suspended § 761.11(h). 51 FR 41961 (November 20, 1986). Section 761.11(a) continues to implement the Section 522(e)(1) prohibition on mining within the protected areas.

On December 27, 1988, the Department of the Interior issued a policy statement concerning coal mining in the areas covered by Section 522(e)(1) of SMCRA, which includes any lands within the boundaries of units of the National Park System; the National Wildlife Refuge System; the National System of Trails; the National Wilderness Preservation System; the National Wild and Scenic Rivers system, including study rivers designated under Section 5(a) of the Wild and Scenic Rivers Act; and National Recreation Areas designated by Act of Congress. The policy is that if a person initiates action to exercise VER in any of the protected areas, the Secretary of the Interior will, subject to appropriations, use available authorities to seek to acquire such rights through exchange, negotiated purchase or condemnation. 53 FR 52384. Thus, this policy provides protection to Section 522(e)(1) areas in addition to that provided by 30 CFR 761.11(a).

The December 27, 1988, proposed rule would have deleted 30 CFR 761.11(h) because it was not needed to implement the mining prohibitions of Section 522(e)(1) of SMCRA. 53 FR 52374. As described above, this proposal was withdrawn on July 21, 1989. 54 FR 30557. The withdrawal of the proposal did not affect the status of the policy statement, which remains in effect.

VER Symposium

On April 3 and 4, 1990, OSM jointly sponsored a national symposium on VER with the University of Kentucky Mineral Law Center and Coal Committee of the American Bar Association's Natural Resources, Energy and Environmental Law Section. The symposium provided a forum for examination of the policy and legal aspects of VER, particularly as they

apply to coal mining in sensitive areas, such as National Parks. Distinguished legal scholars, judges, coal law practitioners and representatives of industry, environmental and citizen groups participated. The Mineral Law Center has published the papers presented at the symposium in a special issue of the "Journal of Mineral Law and Policy." 5 J. MIN. L. & POL'Y 380. This document has been made a part of the administrative record for this rulemaking.

Some areas of consensus on VER did emerge among those present at the symposium. Most participants agreed that OSM should propose a single VER standard rather than offering two or more options for comment. Most participants had a concern about prohibiting mining in situations where the Government had encouraged an expectation of mining (e.g., leased Federal coal) or where the Government had considered the market value of reserved mineral rights when it paid for acquisition of the surface. There seemed to be agreement that the "ownership and authority" VER standard, proposed in 1988, could virtually nullify the mining prohibitions of Section 522(e). The symposium participants were in accord that there was no specific support in SMCRA or the legislative history for defining VER differently according to the categories of lands and protected features listed in Section 522(e). Many participants made the point that in Federal mineral management and public land law, the term "valid existing rights" has an established meaning: those rights that are immune from being extinguished or denied by Secretarial action. One issue on which the symposium participants did not agree was what test Congress intended to be applied to determine whether a claimant had VER. A variety of views was expressed on this subject, and corresponding rationales were given for each VER test advocated.

There was considerable discussion of the takings issue. Although there was no consensus on how a VER definition should operate in relation to the takings clause, there did seem to be general agreement on some related issues. For example, while most participants felt that it is difficult to predict that particular categories of governmental actions will be found to be compensable takings, they tended to agree that a compensable taking would be unlikely when mining prohibitions are applied to Section 522(e) (4) and (5) buffer zones that are a relatively small portion of the property interest. Most participants seemed confident that application of the good faith/all permits test for VER would result in takings compensation claims. The participants agreed that either the good faith/all permits test or the ownership and authority test would be easier to administer than the takings test. Although these areas of consensus that emerged at the symposium do not represent the official views of OSM or the Department of the Interior, they were taken into consideration in the formulation of the proposal described below.

Applicability of Section 522(e) to Subsidence

The December 27, 1988 proposed rule (53 FR 52374) contained two options for addressing the issue of the applicability of Section 522(e) to subsidence: subsidence causing "material damage" would be prohibited in the protected areas or any subsidence would be prohibited. The proposal was withdrawn for further study on July 21, 1989 (54 FR 30557). OSM has decided to address the subsidence issue separately from the proposed VER rule. OSM plans to request public comment on the need for and possible scope of revisions to its current subsidence control regulations, pursuant to Section 516 of SMCRA.

*B. Discussion of Proposed Rule*

As discussed in the preceding portion of this preamble, OSM has promulgated definitions of VER on two prior occasions: March 13, 1979 (44 FR 15342) and September 14, 1983 (48 FR 41349). Parts of both of these regulations were remanded to the Secretary by the court. OSM has reconsidered the administrative record of these promulgations, as well as the legislative history of SMCRA and the various judicial opinions, in developing this proposed rule.

This proposed rule would affect all portions of the definition of "valid existing rights" found in the existing regulations. Substantive revisions are proposed for four concepts in the existing rule, those currently contained in §§ 761.5(a), definition of VER; 761.5(b), haul road VER; 761.5(c), "needed for and adjacent to" test; and 761.5(d)(2), "continually created VER." The remaining provisions have been reorganized and edited for consistency with other proposed revisions. A description of all rule changes OSM is proposing to its permanent program rules follows.

Section 740.11—Applicability

OSM is proposing to modify the Federal lands program at 30 CFR 740.11 to provide that when OSM makes a VER determination on Federal lands pursuant to 30 CFR 740.4(a)(4), it would apply the Federal VER standard described at 30 CFR 761.5, the primary subject of this rulemaking. A new paragraph (g) is proposed to be added to § 740.11 that would create an exception to the general rule of applying State programs to the regulation of surface coal mining operations on Federal lands where a cooperative agreement for that purpose exists. Proposed paragraph (g) would provide that OSM shall make the VER determinations required by § 740.4(a)(4) using the VER definition at 30 CFR 761.5. The purpose of this change is to apply a single VER standard to all VER determinations affecting Federal lands within the boundaries of (e)(1) and (e)(2) areas.

A related issue concerns the situations in which OSM is responsible for making VER determinations. The Federal lands program at 30 CFR 740.4(a)(4) provides that OSM, acting for the Secretary, will make VER determinations for surface coal mining and reclamation operations on *Federal lands* within the boundaries of any areas specified under Section 522(e) (1) or (2) of the Act. Pursuant to the outcome of litigation over the 1983 VER definition, OSM interprets this regulation to require it also to make VER determinations on private inholdings in Section 522(e)(1) areas where operations would affect the Federal interest. PSMRL II, Round III–VER, 22 ERC 1566. This interpretation was communicated in the November 20, 1986 suspension notice. 51 FR 41955. OSM is now soliciting comments on whether 30 CFR 740.4(a)(4) should be modified to incorporate this interpretation explicitly.

In the November 20, 1986 **Federal Register** suspension notice, OSM stated that this rulemaking would address which VER definition would apply when OSM makes a VER determination concerning surface coal mining operations on Federal lands. 51 FR 41955. The issue is whether the VER definitions contained in the approved State programs should apply to such Federally-made VER determinations or whether one standard should be used on Federal lands nationwide. Currently, under the suspension notice, OSM is making VER determinations on Federal lands, and on non-Federal lands within the boundaries of (e)(1) areas where operations would affect the Federal interest, using the VER definition contained in the appropriate State or Federal regulatory program.

OSM is proposing to apply the VER standard described earlier in this proposed rule whenever OSM has the responsibility for making VER

determinations. OSM is aware that this could result in two different VER standards being applied to Federal lands in some States. Where OSM has entered into a cooperative agreement with a State for the regulation of surface mining and reclamation operations on Federal lands pursuant to 30 CFR 740.11, the regulations require that the State program VER standard be applied to those Federal lands where the Secretary has not reserved the responsibility for making VER determinations. Since at 30 CFR 740.4(a)(4) the Secretary has reserved the responsibility for making VER determinations on Federal lands within the boundaries of (e) (1) and (2) areas and on non-Federal lands within the boundaries of (e)(1) areas where operations would affect the Federal interest, the State program definition of VER would apply to areas protected by section 522(e) (3), (4), and (5) on Federal lands not within the boundaries of (e)(1) and (e)(2) areas and to non-Federal lands within the boundaries of (e)(2) areas. However, as discussed below, subsequent to the promulgation of a final rule, OSM will examine State programs to determine if changes to State program regulatory definitions of VER are necessary and State programs will be required to be amended, if necessary, to be no less effective than the Federal definition of VER.

Comments are solicited on this issue, and also, to the extent determinable, on whether all State VER definitions, to be no less effective than the proposed VER test, must be amended to establish the same test.

Section 761.5—Definition of "valid existing rights"—Introductory statement

OSM is proposing a new introductory statement in the section on VER. This statement constitutes the basic definition of VER. Unlike earlier definitions, it does not constitute a "test" which must be met for VER to be found. Rather, it simply defines VER as a right to conduct surface coal mining operations on lands on which, without such a right, mining operations would be prohibited. Subsequent paragraphs contain a set of standards against which individual cases would be measured, to determine whether this right exists.

Section 761.5(a)—Property rights

This proposed paragraph provides that a person shall demonstrate a legal right to either the coal resource for which VER is sought or to conduct a surface coal mining operation not involving extraction of coal, as of the date of the Act or as of the date the prohibition against mining came into effect. This provision constitutes the property rights concept which has been an integral part of the VER definition since OSM first defined it in 1979. In order to demonstrate VER, a person must show possession of a conveyance, lease, deed, contract, or other document establishing a legal right to the mineral resource. The document must establish that the person requesting the VER determination or a predecessor in interest held the necessary legal right on August 3, 1977, or as of the date the section 522(e) prohibition became effective (the applicable effective date).

The language "or as of the date the prohibition against mining became effective for lands that come under the protection of section 522(e) of the Act at a subsequent date" incorporates the "continually created" VER provision currently found in § 761.5(d). Although this provision is rewritten and reorganized in this proposal, the basic intent and application are not changed. Essentially, "continually created" VER protects property rights where a section 522(e) prohibition or limitation on mining did not exist on the date of enactment, but came into existence at some later date. It means that in such cases the standards for determining whether VER exists, proposed in following sections, will be applied using the date the prohibition came into existence, rather than the enactment date of the Act. The history of this provision is discussed in more detail above, in the "Background" section of this preamble.

Additionally, paragraph (a) specifies that interpretation of the terms of the documents relied upon to establish the rights to which this paragraph applies shall be based upon applicable State statutory or case law concerning interpretation of documents conveying such rights. If no such statutory or case law exists, usage and custom at the time and place the documents conveying such rights came into existence will be relied upon for interpretation. This language is virtually identical to the 1983 rule.

Under section 510(b)(6) of SMCRA, OSM and State regulatory authorities are not authorized to adjudicate property rights disputes. Therefore, in situations where a dispute exists between the VER claimant and another party, such as the surface owner or land-managing agency, as to the nature of the relevant property rights held by the VER claimant, OSM would consider a request for VER determination to be incomplete and not actionable by OSM until the dispute is resolved in the proper venue. This procedure would be required because OSM has no jurisdiction to adjudicate property rights disputes, and because, until the dispute is resolved, the claimant cannot demonstrate that the relevant documents establish the necessary rights to the property.

The original promulgation of the definition of VER in 1979 included a paragraph discussing the interpretation of the terms of the document relied upon to establish VER. This paragraph was revised in 1983 at 30 CFR 761.5(e) and is discussed in detail in the preamble to that rule. 48 FR 41315 (September 14, 1983). By moving this provision to paragraph (a), OSM is not proposing any substantive changes to this paragraph.

Finally, this section specifies that in addition to the property rights test of paragraph (a), at least one of the standards listed in the succeeding subparagraphs, (a)(1) and (a)(2), must be met by a person claiming VER to conduct surface coal mining operations on lands protected by section 552(e) of SMCRA. This means that, except as to haulroads covered by paragraph (b), the property rights standard contained in paragraph (a) must be met by all applicants for VER, but that applicants are required to meet only one of the standards proposed for subparagraphs (a)(1) and (a)(2).

Transferability of VER

The legislative history of SMCRA suggests that Congress wanted to avoid any compensable takings. See the statement by Congressman Udall at 123 Cong. Rec. H12878 (April 29, 1977). Many, if not most, property rights in coal are transferable under State law. Any VER regulatory definition or policy adopted by OSM that would have the effect of limiting or abrogating the right to transfer property would risk effecting a compensable taking. In addition, a review of VER law under other Federal statutes indicates no clear or typical Congressional intent that VER be nontransferable. OSM believes that to interpret SMCRA to impose or authorize a limit on VER transferability would not comply with the intent of Congress in enacting SMCRA. Thus, the property rights requirement in this proposed section incorporates the concept that VER is transferable.

To have VER, a person must have had a valid and enforceable right to the coal resource on the date of the Act, or the date the prohibition came into effect, whichever is applicable ("the applicable effective date"), and must also meet one of the standards of subparagraphs (a)(1) or (a)(2). However, if a person with a property interest in the coal on the applicable effective date had VER, that

person could, if permitted by applicable laws and regulations, transfer the VER to a successor after the effective date. The transferred right would suffice as the basis for a finding of VER for the successor in interest. The determination of VER takes into account the nature of the rights on the applicable effective date. Subsequent property transactions cannot be used to create VER if it did not exist on the effective date.

Section 761.5(a)(1)—"Needed for and adjacent to" test

OSM is proposing that a property owner may be found to have VER if the coal is both needed for and immediately adjacent to a validly authorized surface coal mining operation existing as of August 3, 1977, or as of the date the section 522(e) prohibitions became effective ("the applicable effective date"). The proposal would require that the property rights in question must have been in existence on the applicable effective date, as specified in proposed § 761.5(a), above. Adoption of this provision would have the effect of providing for VER under this test for lands where coal will be mined to avoid gravely or entirely diminishing the value of the entire mining operation and to activities necessary to mine, transport and process such additional coal. OSM is proposing to remove the definition of "needed for" because it has determined that the definition does not help clarify the intent or application of these provisions. Finally, because of the reorganization of the proposed rule, the "needed for and immediately adjacent to" provision would become § 761.5(a)(1).

Section 761.5(a)(2)

The principal purpose of section 522(e) of SMCRA is to protect the public interest by keeping the listed areas free from environmental harm that could result from surface coal mining operations. Congress acknowledged, of course, that certain private coal rights existed on the date of enactment in section 522(e) areas, that should be recognized. OSM must implement section 522(e) in a way that achieves the environmental protection goals of section 522(e), while meeting Congressional intent with regard to recognizing certain privately held coal rights.

OSM is seeking to develop a VER standard which achieves a balanced implementation and protection of both Congressional concerns. For example, a standard under which VER would be established solely by the right to mine under State law would tip the balance too far in the direction of preserving coal rights at the expense of environmental protection. Under such a standard, anyone who owned coal likely would have some property right under State law to extract it. In such circumstances, the VER exception would effectively swallow the prohibition. Congress did not intend such a result in enacting section 522(e).

OSM is also guided in its endeavor to define VER by the congressional purpose specified in section 102(m) of SMCRA to "wherever necessary, exercise the full reach of Federal constitutional powers to insure the protection of the public interest through effective control of surface coal mining operations." Exercise of the full reach of Federal constitutional power in giving effect to the environmental protection goals of section 522(e) would be to define VER in a manner which prohibits surface coal mining operations except in those instances necessary to avoid compensable takings. On balance, this test best serves the Congressional purposes of section 522(e).

Accordingly, OSM is proposing at § 761.5(a)(2) that VER would exist if a person had obtained, or had made a good faith effort to obtain, all necessary State and Federal permits prior to August 3, 1977, or as of the date the section 522(e) prohibitions became effective, or if the application of any of the prohibitions contained in section 522(e) of the Act to the property interest that existed on August 3, 1977, or as of the date the prohibitions became effective, would effect a taking of the person's property that would entitle the person to just compensation under the Fifth and Fourteenth Amendments to the United States Constitution.

As stated in an earlier rulemaking, OSM believes "that VER is a site-specific concept that can be fairly applied only by taking into account the particular circumstances of each request." 44 FR 14993 (March 13, 1979). The proposed VER standard would be applied on a case-by-case basis to avoid a compensable taking, except that there would be no question about the existence of VER where a person had, or had made a good faith effort to obtain, all necessary permits.

Any person who proposes to conduct surface coal mining operations in an area where such mining would be prohibited by section 552(e), except for valid existing rights, would first have to seek a determination of VER from the regulatory authority. No permit to mine would be issued for a protected area unless and until such a determination has been made. It should be noted that under the Federal lands rules at 30 CFR 740.4, the Secretary of the Interior is responsible for determinations of VER for surface coal mining and reclamation operations on Federal lands within the boundaries of any areas specified under section 552 (e)(1) and (2) of SMCRA.

Under this proposed rule, a VER determination may be requested either in advance of a permit application or at the time a permit application is submitted. Advance determinations have the advantage that no funds will be expended in developing or reviewing a permit application for an area for which there are no valid existing rights to mine.

A person who seeks a VER determination under the proposal would be responsible for compiling and submitting to the regulatory authority all information necessary to make a finding. the types of information that would have to be submitted are proposed to be listed in 30 CFR 761.12, which is discussed later in this preamble.

The regulatory authority would then review the information submitted for each claim to determine its adequacy to support a claim for VER. This review would consider, among other things, the reliability, relevance and probity of the information, including determining whether the claimant has demonstrated that all permits had been obtained or applied for or that denial of the claim would result in a compensable taking under the Fifth and Fourteenth Amendments to the U.S. Constitution. The regulatory authority would request additional information from the claimant if such information was necessary to make the VER determination. No permit would be issued unless and until VER is found. A determination as to whether VER had been demonstrated would be a final determination subject to administrative and judicial review following the procedures in 30 CFR 775.11 and 775.13 respectively. However, the regulatory authority would reserve the right to reconsider any VER determination it makes in light of adverse rulings from a U.S. District Court or the Claims Court.

In evaluating the adequacy of the information submitted to document the claim of VER and in analyzing whether a denial of VER would result in a compensable taking, OSM is proposing that regulatory authorities be guided by the principles established by the Supreme Court. The Court has not developed a set formula for determining when justice and fairness require that economic costs or losses caused by public action be compensated by the government. See *Kaiser Aetna* v. *United States*, 444 U.S. 164, 175; *Penn Central*

*Transportation Co.* v. *New York City*, 438 U.S. 104, 124 (1978). Rather, it has relied on an *ad hoc* factual analysis to determine whether a government action constitutes a taking compensable under the Fifth Amendment. See *Keystone Bituminous Coal Association* v. *De Benedictis*, 107 S. Ct. 1232 (1987). Three factors have been repeatedly identified that have particular significance in the determination: (1) the economic impact of the regulation on the claimant, (2) the extent to which the regulation has interfered with distinct investment-backed expectations, and (3) the character of the governmental action. *Connolly* v. *Pension Benefit Guaranty Corporation*, 475 U.S. 211, 224–5 (1986); *Keystone*, 107 S. Ct. 1242 *et seq.*

When evaluating the nature and extent of the economic impact of the governmental action, the Court has analyzed the regulatory scheme to determine whether those burdens bear only their rightful portion of the burden and whether there exist any provisions that serve to moderate the economic impact. *Penn Central*, 438 U.S. at 137; *Nollan* v. *California Coastal Commission*, 107 S. Ct. 141 n. 4 (1987). In determining the extent to which the regulation interferes with distinct investment-backed expectations, the Court considers whether claimants have made a substantial investment in property which would be rendered unprofitable or without value; and whether claimants were given advance notice of the regulation affecting their ownership rights. *Connolly*, 475 U.S. at 226–7; *Keystone*, 107 S. Ct. at 1242. Finally, when attempting to determine the character of the governmental action, the Court asks, among other things, whether the government has appropriated assets or benefits for its own use, or whether the government action is intended to protect public health or safety by preventing activities similar to public nuisances, and whether the action is incident to a public program that adjusts the benefits and burdens of economic life for the promotion of the public good. See *Loretto* v. *Teleprompter Manhattan CATV Corp.*, 458 U.S. 419, 426 (1982) (physical intrusion); *Agins* v. *Tiburon*, 447 U.S. 255, 260 (1980) (relationship of action to legitimate state interests); *Keystone*, 107 S. Ct. at 1246.

To assist regulatory authorities in gauging the takings implications of denial of requests for VER determinations, OSM is proposing to utilize and provide relevant portions of the "Attorney General's Guidelines for the Evaluation of Risk and Avoidance of Unanticipated Takings," Department of Justice, June 30, 1988. These guidelines were developed to implement Executive Order 12630, "Governmental Actions and Interference with Constitutionally Protected Property Rights," of March 15, 1988, which directs Federal Executive Branch departments and agencies, as a part of their internal management process, to assess the takings implications of proposed policies and actions on private property interests protected by the Fifth Amendment. The Guidelines establish a basic, uniform framework for regulatory authorities to use in their internal evaluations of the takings implications of administrative, regulatory and legislative policies and actions.

OSM notes that all Federal agencies are required to analyze takings implications consistent with the Guidelines. OSM therefore anticipates that preparation of takings analyses by regulatory authorities as part of VER determinations is also feasible. The portion of the Guidelines addressing regulatory actions outlines relevant takings factors and sets forth leading cases on the issues. OSM hopes the Guidelines will be highly useful to regulatory authorities making VER determinations under proposed § 761.5(a)(2) and are attached as an appendix at the end of this rulemaking. OSM specifically requests comments as to whether a more detailed discussion of the application of these Guidelines to VER takings analyses is needed.

Objectives for VER Standard

In evaluating the options for a proposed VER standard, OSM considered the following factors:

—Consistency with SMCRA and the intent of Congress, as expressed in the legislative history of SMCRA,
—Consistency with existing case law,
—Consideration of VER law under other Federal statutes,
—Fairness and equity of results,
—Flexibility of application, and
—Predictability and ease of administration.

Legislative History

SMCRA does not specify what VER test Congress intended. Nor does the legislative history provide a dispositive indication of what VER test Congress intended. This analysis was supported by the conclusions of the distinguished panel of experts who participated in the VER symposium. There was substantial disagreement as to what test Congress intended, and as to what test would best meet Congressional intent. Because the legislative history provides information as to Congress' objectives and concerns for the VER provision, but does not unequivocally indicate what specific test was intended, the Secretary has discretion to determine which test best meets Congressional intent.

Although VER symposium participants' comments and papers did not agree on what test Congress intended, the greater weight of the comments recognized that a takings test (or some variation of that test) would be consistent with legislative intent. Participants with an environmental and citizens' group background indicated that they would prefer a test more protective of section 522(e) areas, and participants with an industry background preferred a test more favorable to industry concerns. However, both sets of participants generally acknowledged that the takings test was within the range of tests consistent with SMCRA and legislative intent.

The VER standard at proposed § 761.5(a)(2) is consistent with the legislative history of SMCRA, which indicates that Congress was concerned about takings implications of section 522(e). During debate on H.R. 2, the final coal mining regulatory bill passed by the House prior to the enactment of SMCRA, an amendment to delete a VER exemption in section 601 was proposed. Section 601 addressed the designation of lands unsuitable for non-coal mining. Section 601(d) provided, in part, that "[v]alid existing rights shall be preserved and not affected by such designation." Congressman Roncalio offered the amendment primarily to stop the development of a limestone quarry near Story, Wyoming. Congressman Udall, who is recognized as the chief architect of SMCRA, opposed the amendment "because it takes from the bill a statement that valid legal rights should be preserved. I do not think we should do that without paying compensation under the fifth amendment." 123 Cong. Rec. H 12878 (April 29, 1977). Therefore, the Secretary is proposing a takings test as consistent with Congressional intent, because a takings test would recognize existing property rights, and would avoid compensable takings.

Case Law

Proposed § 761.5(a)(2) is consistent with judicial decisions in previous challenges to the Federal regulations. In PSMRL I, Round I, the court indicated that a good faith effort to obtain all necessary permits should suffice to demonstrate VER. 14 ERC 1091. In *Hodel* v. *Virginia Surface Mining & Reclamation Assn.*, the Supreme Court

noted that the unmodified all permits test was not "compelled" either by the statutory language or its legislative history. 452 U.S. 264, n. 37 (1981). In *NWF* v. *Hodel*, the Appeals Court stated that the legislative history "does suggest that Congress did not intend to infringe on valid property rights or effect takings through section 522(e)." 839 F.2d 694, 750.

The proposal is also consistent with OSM's original view that VER determinations must employ a takings analysis. The 1979 rule established the all permits test as a threshold identifying those circumstances that would invariably result in a finding of VER. OSM anticipated that in other cases, depending on the circumstances, persons who did not meet the all permits test would be found to have VER in order to comply with the express intent of Congress to avoid a taking. For example, those who could show manifest substantial expectation and substantial investment through the "needed for and adjacent" test would also qualify for the exemption. Thus, the "all permits" test was not intended to be exclusive, that is, it was not intended to exclude all those who had not obtained all necessary permits from the possibility of demonstrating VER. Rather, it was intended to *include* those who had met the "all permits" test and any others who, based on their particular circumstances, should have VER. This concept was stated in the preamble to the 1979 regulations:

> * * * VER is a site-specific concept which can be fairly applied only by taking into account the particular circumstances of each permit applicant.
>
> * * * Under the final definition, VER must be applied on a case-by-case basis, except that there should be no question about the presence of VER where an applicant had all permits for the area as of August 3, 1977.
>
> 44 FR 14993 (March 13, 1979).

The relationship of the all permits test to the takings standard was explained in the same preamble:

> * * * OSM has endeavored to determine the point at which payment would be required because a taking had occurred (sic), then to define 'valid existing rights' in those terms, i.e, those rights which cannot be affected without paying compensation.
>
> 44 FR 14992.

As discussed above, the Federal District court in 1980 identified another group who do not meet the all permits test, but who should have VER, those who have made a good faith effort to obtain the required permits. PSMRL I, Round I. Pursuant to the court's suggestion, OSMRE, in the 1980 suspension notice, modified the VER definition to explicitly recognize that those who had made a good faith effort to obtain all permits by August 3, 1977, are included in the definition of VER.

This view was again reflected in its defense of the 1983 takings test for VER, where OSM argued that the 1979 rule "established a multi-pronged takings test for VER." Brief of the Secretary of the Interior (dated October 19, 1984) at 5. PSMRL II, Round III–VER. OSM recognizes that there may have been some confusion about its interpretation of the 1979 rule and that the rule has not been consistently applied. However, the proposed definition of VER is consistent with what OSM originally intended a VER decision to be, an evaluation of all facts to determine whether a compensable taking would occur if VER were denied. OSM does note that there have been significant developments in the case law on compensable takings under the Fifth Amendment since the 1979 and 1983 VER rulemakings. The status of takings case law as of June 30, 1988 is discussed in the attached Appendix, Guidelines on Compensable Takings Analyses for VER Determinations.

Other Federal Statutes

Congress may have intended that the SMCRA VER test have an effect similar to that of other Federal VER provisions. This is not clear. If so, the takings test would be consistent with that intent.

One of the products of the VER symposium has been a set of analyses of VER law under other Federal statutes, particularly land management statutes, including the Federal Land Policy and Management Act of 1976, 43 U.S.C. 1701; the Coal Leasing Amendments Act of 1975, 30 U.S.C. 201(b); and the Wilderness Act of 1964, 16 U.S.C. 1131. These analyses, while not uniform in their conclusions, do indicate that there are two factors which are typically reflected in cases on VER determinations under other Federal statutes: (1) VER provisions under Federal land management statutes typically concern situations where, under a Federal statute, a nonvested interest or expectation in property owned by the U.S. has been generated, but would be extinguished under a subsequent Federal statute unless VER is found, and (2) typically, the cases grant VER when either denial would be a compensable taking, or denial would be inequitable. Particularly in this second category of cases, the interest was frequently not a vested property right, or was not a property right for which denial would be a compensable taking.

The SMCRA VER takings test may be distinguished from typical VER standards under other Federal statutes, because (among other grounds): (1) The SMCRA VER claimant must demonstrate rights stemming from vested title to the relevant property interest (as a matter of state law), as a prerequisite to obtaining a SMCRA VER determination; and (2) often the U.S. will not be the fee owner or surface owner of the subject land (e.g., for section 522(e)(4) or (5) land). Therefore, unlike other VER provisions, which may involve consideration of whether equity requires recognizing the claimant's interest in property, under SMCRA equitable considerations would not be relevant to OSM's determination of whether the claimant has demonstrated the necessary rights stemming from vested title in the property.

However, the proposed VER takings test would recognize and protect equitable interests, because the fundamental inquiry in takings cases is whether it would be equitable to allow the government to take a particular action affecting private property, without compensation to the affected owner. Therefore, the proposed takings test would have an effect analogous to that of VER provisions under Federal land management statutes, because restrictions on mining under section 522(e) will not be imposed if application of the restrictions would be a compensable taking, and the takings test includes equitable considerations as an integral part of the Constitutional evaluation.

Fairness and Equity

From a practical standpoint, OSM believes that the standard of proposed § 761.5(a)(2) would achieve fair and equitable results. As opposed to a "mechanical" test, which narrowly focuses on a portion of the circumstances related to the request for VER determination, the proposed standard would allow consideration of all the circumstances, to balance private property rights with protection of public health, safety and welfare. The proposed standard incorporates a degree of flexibility that would not only be responsive to changes in takings jurisprudence, but would also give the regulatory authorities latitude to consider what is fair based on the facts.

Predictability and Ease of Administration

It has been argued that adoption of a takings standard for VER would require OSM and the State regulatory authorities to decide takings claims by

interpreting and applying Constitutional law. This is a function that some State regulatory authorities and others claim is beyond the authority and capability of the regulatory authorities to do.

This proposal does not require the regulatory authorities to determine the constitutionality of any legislation or to decide a claim for compensation under the Constitution. Rather, the regulatory authorities would be required to conduct a predictive analysis that State and local agencies routinely perform, at least informally and implicitly, for many regulatory actions: They must decide whether a regulatory action, if taken, would result in a compensable taking. For example, a similar determination would be inherent in many zoning and nonconforming use decisions by local governments. Whether a taking has actually occurred as a result of a regulatory action is a judicial determination. If a State regulatory authority wishes to defer the predictive determinations to a State court, and the deferral is authorized under State law, the regulatory authority may request a declaratory judgment as to whether a taking would occur, or they may require the VER claimant to submit a judicial declaratory judgment on the takings issue prior to the regulatory authority's VER determination. OSM requests comments as to whether requests for declaratory judgments on such issues will lie under applicable State laws.

It has also been claimed that State regulatory authorities will be reluctant to deny VER in any circumstances in order to avoid the possibility of a "budget-busting" successful taking claim. OSM has no evidence that State regulatory authorities will not discharge their duties in good faith. The States would not be making VER determinations in a vacuum, but would look to apply a large body of existing law on compensable takings, the current status of which is summarized in the Attorney General's Guidelines, discussed above and appended to this proposed rule. Further, States' VER determinations will be subject to appeals by interested persons, under applicable state procedures.

Other Options Considered

In arriving at a decision to propose the standard contained in § 761.5(a)(2), OSM considered and ultimately rejected a number of alternatives. The "mechanical" good faith/all permits test was rejected because it does not fully comport with the intent of Congress to avoid takings. It is clear that application of the food faith/all permits test could effect a compensable takings in certain circumstances. The ownership and authority test, which was supported by some symposium participants, was not proposed because it would virtually nullify the protections of the section 522(e) prohibitions. It is a cardinal rule of statutory construction that all provisions of a statute should be given meaning, if possible. The "strong expectations" test, proposed at the national VER symposium by Professor Marla E. Mansfield of the University of Tulsa and described in her article published in the Journal of Mineral Law and Policy (5 J. MIN. L. & POL'Y 431–471), incorporates an aspect of takings analysis by focusing on the investment-backed expectations of property owners. However, its narrow focus would have precluded analysis of the totality of circumstances. The option of promulgating no regulatory definition of VER and simply deciding each case based on an analysis of the particular circumstances would have provided no guidance to property owners and regulatory authorities and potentially fails to provide consistency and predictability of outcomes. Another symposium participant suggested that the unsuitability designation processes of section 522(a) and (b) be used to protect sensitive areas covered by section 522(e)(1) and (2). OSM believes that, aside from the merits of the option, it would, best, be only a partial solution since the unsuitability designation process would not address the areas protected under paragraphs (e)(3), (4) and (5) of section 522(e). Finally, OSM also considered proposing a number of VER definitions to correspond to the characteristics of the areas protected by section 522(e), e.g., one standard for Federal land and one for non-Federal land. An inability to establish any support in the statutory language or the legislative history for this approach meant that it also had to be rejected.

Section 761.5(b)—Haul roads

OSM's initial analysis of haul roads revealed that there were two situations in which VER might be established for haul roads. This analysis was discussed in the preamble to the first definition of VER, promulgated in 1979 at 30 CFR 761.5(b). 44 FR 14933 (March 13, 1979). Except for renumbering, this provision has been unchanged since that promulgation. The only change proposed here is the addition of language clarifying that the "continually created VER" provision applies to haul roads. OSM believes that VER would exist if any of the prohibitions of section 522(e) of SMCRA were applied to existing haul roads in cases where the prohibitions came into effect at some time subsequent to the date SMCRA was passed. Therefore, OSM is purposing to amend the haul road portion of the VER definition to provide that VER means (1) a recorded right of way, recorded easement, or a permit for a coal haul road recorded as of August 3, 1977, or as of the date the protection under section 522(e) came into effect, or (2) any other road in existence on August 3, 1977, or as of the date the protection under section 522(e) came into effect.

Section 721.5(d)(2)—Takings test

The proposed rule will, when promulgated as a final rule, have the effect of removing section 761.5(d)(2), which set forth a takings test for VER, and which was suspended by OSM. 51 FR 41961 (November 20, 1986).

Section 761.10—Information collection

The proposed rule would add section 761.10 which lists the sections containing information collection requirements, the estimated burden hours, the Office of Management and Budget (OMB) clearance number, and the OSM and OMB addresses where comments concerning the information collection requirements contained in part 761 may be sent.

Section 761.11(h)—Areas where mining is prohibited or limited

Section 761.11(h), which prohibits mining and other activities on Federal lands within section 522(e)(1) areas, was suspended on November 20, 1986, 51 FR 41961. OSM is proposing to remove this language as it is not needed to implement section 522(e)(1). Section 761.11(a) already prohibits surface coal mining operations within section 522(e)(1) areas unless an operator has VER and except for those operations existing on August 3, 1977.

The Department has made a commitment to prevent surface coal mining operations in the areas covered by section 522(e)(1) of SMCRA. 53 FR 52384. It has a variety of tools to protect such lands, including purchase authority, authority to exchange private mineral rights for Federal lands within the same state, and condemnation. To emphasize the Department's commitment to prevent surface coal mining operations in section 522(e)(1) areas, the Department issued a December 27, 1988, policy statement providing that if a person takes action to exercise valid existing rights under section 522(e) of the Act to conduct surface coal mining operations on section 522(e)(1) areas, then, subject to appropriation where applicable, the Secretary of the Interior will use, as a top priority, available authorities and

funding to seek to acquire such rights through exchange, negotiated purchase, or condemnation. The areas included in section 522(e)(1) are any lands within the boundaries of units of the National Park System, the National Wildlife Refuge Systems, the National System of Trails, the National Wilderness Preservation System, the Wild and Scenic Rivers System, including study rivers designated under section 5(a) of the Wild and Scenic Rivers Act, and National Recreation Areas designated by Act of Congress. 53 FR 52384 (December 27, 1988). (The subsequent withdrawal of the accompanying proposed rule did not affect the status of the policy statement.)

Secretary Lujan has reaffirmed the Department's policy to prevent coal mining in the Nation's treasury of National Parks and other areas covered by section 522(e)(1). Consequently, if adopted, this proposed rule will not result in opening up the National Parks, or any of the other areas included in section 522(e)(1), to coal mining.

Section 761.12—Procedures

OSM is proposing to make three changes to its regulatory procedures for implementing section 522(e) of SMCRA. OSM is proposing to add to paragraph (a) of § 761.12 a list of the types of information that a person requesting a VER determination would have to submit to the regulatory authority. Proposed paragraph (a) would provide that a person requesting a VER determination is responsible for submitting to the regulatory authority all information necessary to make a finding. The types of information that would have to be submitted include the following:

(1) A description of the land in question, including the area(s) and corresponding coal seam(s) for which a VER determination is required. This information would enable the regulatory authority to identify and locate accurately the land and minerals in question.

(2) A description of the property rights for the land and minerals in question that verifies the character and extent of the interests of the requester and of all other outstanding interests in the land and minerals; for example, a certified abstract of title. The property rights information must specify the ownership, character, and extent of the property rights as of the applicable effective date for the area. The reason for proposing both current and effective date information is that the requester must establish VER as of the applicable effective date. Therefore, subsequent changes in the nature or extent of the subject property cannot be used to establish or to affect VER. This information would enable the regulatory authority to verify that the VER requester meets the property rights test of proposed § 761.5(a). This information is also required so that the regulatory authority may determine what other interests in and uses of the property exist or are feasible. Therefore, the information should also indicate what other property interests may be exercised or enjoyed (e.g., by use, sale, or other disposition). If the coal interests in question have been severed from the surface estate, and if the surface estate is held by a Federal agency, the property rights information must include a title opinion or other official title analysis by the appropriate office of the Federal agency, discussing whether the VER applicant has the property right to mine the coal by the method intended.

(3) Application, approval and issuance dates and identification numbers of all permits and amendments held or applied for by the applicant or by any predecessor(s) in interest, including the following:

(a) Surface and/or underground coal mining permit;

(b) National Pollutant Discharge Elimination System permit;

(c) State air pollution control permit; and

(d) Any other applicable permits, such as special use permit from the U.S. Forest Service. This information would enable the regulatory authority to determine if the VER requester had complied with the good faith/all permits test of proposed § 761.5(a)(2).

(4) A detailed description of the proposed mining method and plan of operations, including estimates of coal to be extracted. This information would be of critical importance to an analysis of the takings implications of denial of VER.

(5) If VER based on a takings analysis is requested, information necessary to determine whether a compensable takings would occur if VER were denied shall be provided, including information on the following factors as relevant: Information on the economic impact of VER denial, including information on the value and economic feasibility of all other possible uses of the property, and an appraisal of the fair market value of the property if VER is granted and if denied; information on the investment-backed expectations of the owner on the applicable effective date of the prohibition, including a description of the actions and costs incurred by the owner by the effective date of the prohibition that establish the reasonable investment-backed expectations of that owner to mine by the intended method; and information on the impact of the intended surface coal mining operation on the purposes, value, and uses of the area designated under section 522(e) to establish whether the proposed operation would have a nuisance-like effect. Although a requester is not required to seek VER for an entire unit of property, OSM anticipates that the unit of property that will be analyzed for purposes of a VER takings determination will be a unit or contiguous units of property under the same ownership or same use on the applicable effective date. OSM invites comments on the question of what the applicable unit of property should be in a VER determination.

(6) All information on the feasibility of extracting coal from the property in question by methods other than the proposed mining method, including copies of technical reports and analyses.

(7) Any other information that the VER claimant believes will support the claim, and any other information requested by the regulatory authority concerning the VER request.

The above proposed information requirements are considered to be the minimum necessary to enable the regulatory authority to analyze the facts and make a VER determination using the proposed tests. Comments are specifically requested concerning whether additional types of information should be listed.

OSM is also proposing to modify paragraph (c) of § 761.12 to delete the requirement for submittal of a permit application when a person is seeking a determination that mining is permissible under § 761.11(b). Proposed paragraph (c) would provide that where the proposed operation would include Federal lands within the boundaries of any national forest, and the person seeks a determination that mining is permissible under § 761.11(b) (for example, when the person seeks a compatibility finding), the person shall submit a request for such a determination to the Director. The regulatory authority shall not issue a permit for the proposed operation until the findings required by section 522(e)(2) of SMCRA have been made. The purpose of this change is to make the provision consistent with the VER procedures, which do not require a permit application to accompany a request for VER determination. However, the change would not shift the burden of demonstrating the permissibility of the mining operation away from the requester.

Finally, OSM is proposing to add a new § 761.12(h), and redesignate existing § 761.12(h) as § 761.12(i). New § 761.12(h) would require that the regulatory authority will prepare a written decision on the request for a VER determination. If the regulatory authority determines, based on all information in the record of the determination, that the record is sufficient to support a determination, then the regulatory authority shall prepare a written determination which sets forth the relevant issues and makes findings and conclusions based on the record, concerning those issues. Guidance on the relevant issues for a VER takings analysis is provided in the Appendix to the proposed rule. This guidance is intended to be used by the regulatory authority as applicable.

VER for Coal Exploration in Section 552(e) Areas and Section 772.14—Commercial use or Sale

In its December 29, 1988, (53 FR 52942, 52945) revisions to the coal exploration regulations codified at 30 CFR part 772, OSM discussed the issue of requiring VER for coal exploration, but decided:

> Until a new definition of VER is promulgated, the applicability of the proposed VER requirement for exploration cannot be clearly predicted. Therefore, (OSM) has determined that it would not be appropriate at this time to promulgate a VER requirement for exploration within section 522(e)(1) areas. When a new VER rule is promulgated, (OSM) will reconsider the issue of whether a person conducting exploration operations within 522(e)(1) areas should be required to demonstrate VER prior to conducting such exploration.

This issue was litigated in *NWF* v. *Lujan*, Nos. 89–0504, 89–1221 and 89–1614, slip op. at 25–33 (D.D.C. Sep. 5, 1990), in which the court found that the Department had improperly failed to articulate a reason for not adopting a proposed rule to require a VER determination prior to exploration in section 522(e)(1) areas.

Because OSM is proposing to adopt a VER standard that would in many cases involve an analysis of the takings implications of a denial of VER, OSM is proposing to continue to allow certain exploration activities in section 552(e) areas without a prior VER determination, because such activities may be necessary for the purpose of determining whether a taking might occur. OSM has found no basis for distinguishing (e)(1) areas from the other areas protected by section 552(e).

To establish whether a taking might occur, it may be necessary to obtain coal seam and other stratigraphic data from drilling cores obtained by coal exploration operations. For example, core data could be permitted to an evaluation of a mineral property in order to establish whether a prohibition on mining constitutes a taking of that property. Thus, to require a determination of VER prior to allowing exploration might effectively preclude a property owner from collecting the data necessary to demonstrate that the prohibition on mining has "taken" the property right. This could itself constitute a deprivation of a property right. Although each situation must be judged on its particular facts, exploration for mineral valuation purposes, which is conducted in compliance with the requirements of 30 CFR part 772, will minimize adverse environmental effects in the protected areas. Thus, in some circumstances, maintaining the current regulation, which does not require a VER determination for exploration, is warranted.

However, OSM is concerned that coal exploration activities associated with the commercial use or sale of coal may result in a degree of disturbance and adverse environmental impact that would be incompatible with the intent of Congress in designating the areas protected by section 522(e). For instance, the extraction of coal for its utilization in test burn would relate more to the marketability of the coal at a specific family and would go beyond the activities necessary for property valuation. Thus, OSM is proposing that paragraph (b)(5) be added to require a demonstration of VER before such exploration could proceed. This change would have the effect of requiring VER for certain exploration activities. Since no commercial use or sale of coal would be allowed without a demonstration of VER, exploration within section 522(e) areas without VER would be limited to activities related to evaluation of the resource. Although the prohibitions of section 522(e) apply to "surface coal mining operations," from the definition of which coal exploration is excluded, OSM believes that coal exploration for commercial use or sale is not necessary for property valuation and may create impacts that are indistinguishable from surface coal mining operations and are incompatible with the rationale for protecting the sensitive areas identified in section 522(e). The Secretary's discretionary rulemaking authority under §§ 201(c)(2) and 512(a) of the Act provides sufficient legal basis for the promulgation of this requirement.

*C. Environmental Impact Statement and Regulatory Impact Analysis*

Following the April 3, 1985 **Federal Register** notice of intent to propose a rule, OSM published a "Notice of intent to prepare a draft environmental impact statement (EIS) and a preliminary regulation impact analysis (RIA) and to hold scoping meetings." 50 FR 25473 (June 19, 1985). Public scoping meetings were held on August 1, 1985 in Pittsburgh, Pennsylvania, August 6, 1985 in St. Louis, Missouri, and on August 9, 1985 in Washington, DC. Public comments on the proposal were received through September 10, 1985. Based on comments received, OSM decided to combine the VER rule and the issue of the applicability of the section 522(e) prohibitions to subsidence for purposes of analysis under the National Environmental Policy Act (NEPA). Subsequently a new scoping notice was published in the **Federal Register**. 52 FR 2421 (January 22, 1987). Comments were received and both a draft EIS and a preliminary RIA have been prepared for public review and comment.

For an analysis of the economic and environmental consequences of alternative rule options, the reader is referred to OSM's preliminary Regulatory Impact Analysis (RIA) and draft Environmental Impact Statement (EIS) which have been prepared in conjunction with this proposed rulemaking and may be examined in OSM's Administrative Record office. Copies of the draft EIS and preliminary RIA are available upon request from the Branch of Environmental and Economic Analysis, Office of Surface Mining Reclamation and Enforcement (5415–L), 1951 Constitution Avenue, NW., Washington, DC 20240.

*D. Effect in Federal Program States and on Indian Lands*

The rules proposed today, if adopted, would be applicable through cross-referencing in those States with Federal programs and on Indian lands. The States with Federal programs are California, Georgia, Idaho, Massachusetts, Michigan, North Carolina, Oregon, Rhode Island, South Dakota, Tennessee, and Washington. The Federal programs for these States appear at 30 CFR parts 905, 910, 912, 921, 922, 933, 937, 939, 941, 942, and 947, respectively. The Indian lands program appears at 30 CFR part 750.

Comments are specifically solicited as to whether unique conditions exist in any of these States or on Indian lands relating to these proposed rules which

should be reflected either as changes to the national rules or as specific amendments to any of all of the Federal programs or Indian lands program.

**III. Procedural Matters**

*Federal Paperwork Reduction Act*

The collections of information contained in part 761 of this rule have been submitted to the Office of Management and Budget (OMB) for approval as required by 44 U.S.C. 3501 *et seq.* The collection of this information will not be required until it has been approved by OMB. The information collection and reporting burden for coal mine operators under this proposed rule is estimated to average 75 hours per response. The estimated burden includes time for reviewing instructions, searching existing data sources, gathering and maintaining the data needed, and completing and reviewing the collection of information. Send comments regarding the burden estimate or any other aspect of this collection of information, including suggestions for reducing the burden to: Information Collection Clearance Officer, Office of Surface Mining, 1951 Constitution Avenue NW., Washington, DC 20240; and to the Office of Management and Budget, Paperwork Reduction Project (1029-____), Washington, DC 20503.

*Executive Order 12291*

The DOI has examined the proposed rules according to the criteria of Executive Order 12291 (February 17, 1981) and has determined that they are major and do require a regulatory impact analysis. The determination was made previously in connection with the preparation of the notice of intent to conduct rulemaking and continues to be valid. 50 FR 13250 (April 3, 1985). Also see "Intent to Prepare a Draft Environmental Impact Statement and a Preliminary Regulatory Impact Analysis on the proposed Rule Defining the Applicability of the Prohibitions in Section 522 to Underground Coal Mining; Notice of Scoping Meeting." 50 FR 25473 (June 19, 1985).

*Regulatory Flexibility Act*

The DOI also has determined, pursuant to the Regulatory Flexibility Act, 5 U.S.C. 601 *et seq.*, that the proposed rule could have significant economic impact on a susbstantial number of small entities and requires the preparation of an initial Small Entity Flexibility Analysis (SEFA) which is available in the Administrative Record. This, too, is a continuation of a determination made in April 1985. 50 FR 13250 (April 3, 1985). The combined preliminary RIA and initial SEFA have been placed in the Administrative Record. The combined preliminary RIA and initial SEFA are available for inspection in the Administrative Record office, room 5131L, 1100 L Street NW., Washington, DC.

*National Environmental Policy Act*

OSM has determined that the proposed rules require the preparation of an environmental impact statement pursuant to section 102(2)(C) of the National Environmental Policy Act of 1969, 42 U.S.C. 4332(2)(C). 50 FR 25473, (June 19, 1985). The draft EIS is available for inspection in the Administrative Record, room 5131, 1100 L Street NW., Washington, DC. Single copies are available upon request from the Branch of Environmental and Economic Analysis, Office of Surface Mining Reclamation and Enforcement (5415-L), 1951 Constitution Ave NW., Washington, DC 20240.

*Executive Order 12630*

In accordance with Executive Order 12630 (March 18, 1988) and the Attorney General's Guidelines For the Evaluation of Risk and Avoidance of Unanticipated Takings, issued June 30, 1988, the Department has prepared a takings implication assessment (TIA). The TIA is available for inspection in the Administrative Record, room 5131, 1100 L Street NW., Washington, DC.

Effect on State Programs

Following promulgation of the final rule, OSM will evaluate permanent State regulatory programs approved under section 503 of the Act to determine whether any changes in these programs will be necessary. If the Director determines that certain State program provisions should be amended in order to be made no less effective than the revised Federal rules, the individual States will be notified in accordance with provisions of 30 CFR 732.17.

Author

The principal author of this regulation is Patrick W. Boyd, Branch of Federal and Indian Programs, Office of Surface Mining Reclamation and Enforcement, 1951 Constitution Avenue NW., Washington, DC 20240; telephone (202) 208-2564 or 268-2564 (FTS).

**List of Subjects**

*30 CFR Part 740*

Public lands—mineral resources, Reporting and recordkeeping requirements, Surety bonds, Surface mining, Underground mining.

*30 CFR Part 761*

Historic preservation, National forests, National parks, National trails system, National wild and scenic rivers system, Surface mining, Wilderness areas, Wildlife refuges.

*30 CFR Part 772*

Reporting and recordkeeping requirements, Surface mining, Underground mining.

Accordingly, it is proposed that 30 CFR parts 740, 761 and 772 be amended as set forth below.

Dated: February 22, 1991.

**Jennifer A. Salisbury,**

*Acting Assistant Secretary—Land and Minerals Management.*

**SUBCHAPTER D—FEDERAL LANDS PROGRAM**

## PART 740—GENERAL REQUIREMENTS FOR SURFACE COAL MINING AND RECLAMATION OPERATIONS ON FEDERAL LANDS

1. The authority citation for part 740 continues to read as follows:

**Authority:** 30 U.S.C. 1201 *et seq.* and 30 U.S.C. 181 *et seq.*

2. Section 740.11 is amended by revising paragraph (a) and by adding paragraph (g) to read as follows:

**§ 740.11 Applicability.**

(a) Except as provided in paragraph (g) of this section, upon approval or promulgation of a regulatory program for a State, that program and this subchapter shall apply to:

* * * * *

(g) OSM shall make the VER determinations required by § 740.4(a)(4) using the VER definition at § 761.5 of this chapter.

**SUBCHAPTER F—AREAS UNSUITABLE FOR MINING**

## PART 761—AREAS DESIGNATED BY ACT OF CONGRESS

3. The authority citation for part 761 is revised to read as follows:

**Authority:** Pub L. 95-87 (30 U.S.C. 1201 *et seq.*), and Pub. L. 100-34.

4. The definition of "valid existing rights" in § 761.5 is revised to read as follows:

**§ 761.5 Definitions.**

* * * * *

*Valid existing rights* means that a person has a right, subject to the requirements of the Act, to conduct surface coal mining operations on lands where, in the absence of that right, such operations would be prohibited by

Section 522(e) of the Act. Valid existing rights shall be established by application of the following standards:

(a) Except as provided in paragraph (b) of this definition, to establish valid existing rights, a person intending to conduct surface coal mining operations on lands protected by Section 522(e) of the Act shall demonstrate a legally binding conveyance, lease, deed, contract, or other document which establishes a right to the coal resource (or to conduct a surface coal mining operation not involving extraction of coal) as of August 3, 1977, or as of the date the prohibitions became effective for lands that come under the protection of Section 552(e) of the Act at a subsequent date ("the applicable effective date"). Interpretation of the terms of the documents relied upon to establish the rights to which this paragraph applies shall be based either upon applicable State statutory or case law concerning interpretation of documents conveying such rights or, where no applicable State law exist, upon the usage and custom at the time and place the documents conveying such rights came into existence. In addition, a person intending to conduct surface coal mining operations on lands protected by Section 522(e) of the Act shall demonstrate that one of the following standards is met.

(1) The coal is both needed for and immediately adjacent to a validly authorized surface coal mining operation existing as of August 3, 1977, or as of the date the Section 522(e) prohibitions became effective; or

(2) The person had obtained, or had made a good faith effort to obtain, all necessary State and Federal permits prior to August 3, 1977, or as of the date the Section 522(e) prohibitions became effective, or the application of any of the prohibitions contained in Section 522(e) of the Act of the property interest that existed on August 3, 1977, or as of the date the prohibitions became effective, would effect a taking of the person's property that would entitle the person to just compensation under the Fifth and Fourteenth Amendments to the United States Constitution.

(b) For haul roads, valid existing rights means—

(1) A recorded right of way, recorded easement or a permit for a coal haul road recorded as of August 3, 1977, or as of the date the Section 522(e) prohibitions became effective, or

(2) Any other road in existence as of August 3, 1977, or as of the date the Section 522(e) prohibitions became effective.

* * * * *

5. Section 761.10 is added to read as follows:

**§ 761.10 Information collection.**

The collections of information contained in 30 CFR 761.12(a)(1) have been approved by the Office of Management and Budget under 44 U.S.C. 3507 and assigned clearance number 1029-____. The information will be used to meet the requirements of section 522(e) of Public Law 95-87, which provides that "subject to valid existing rights, no coal surface mining operations" shall be permitted on any lands within the boundaries of National Parks and certain other specified areas. This information will be used by the regulatory authority to determine if the requester meets the valid existing rights requirement. The obligation to respond is required to obtain a benefit in accordance with Public Law 95-87. Public reporting burden for this information is estimated to average 75 hours per response, including the time for reviewing instructions, searching existing data sources, gathering and maintaining the data needed, and completing and reviewing the collection of information. Send comments regarding the burden estimate or any other aspect of this collection of information, including suggestions for reducing the burden to: Information Collection Clearance Officer, Office of Surface Mining, 1951 Constitution Avenue, NW., Washington, DC 20240; and to the Office of Management and Budget, Paperwork Reduction Project 1029-____, Washington, DC 20503.

**§761.11 [Amended]**

6. In § 761.11, paragraph (h) is removed.

7. Section 761.12 is amended by revising paragraphs (a) and (c), by redesignating paragraph (h) as paragraph (i) and by adding new paragraph (h) to read as follows:

**§ 761.12 Procedures.**

(a)(1) A person requesting a VER determination is responsible for submitting to the regulatory authority all information necessary to make a determination on VER. The types of information that shall be submitted include the following:

(i) A description of the land in question, including the area(s) and corresponding coal seam(s) for which a VER determination is required;

(ii) A description of the property rights for the land and minerals in question that verifies the character and extent of the interests of the requester and of all other outstanding interests in the land and minerals; for example, a certified abstract of title. The description of property rights shall include complete documentation of the property rights as they existed on the applicable effective date. The description shall also include complete documentation of property rights, as of the applicable effective date, in any contiguous parcels that were under common ownership as of the applicable effective date. If the coal interests have been severed and the surface estate is held by a Federeal agency, the description of property rights shall also include a little opinion or other official title analysis by the Federal agency, discussing whether the applicant has the property right to mine the coal by the intended method.

(iii) Application, approval and issuance dates and identification numbers of all permits and amendments held or applied for by the requester or by a predecessor(s) in interest, including the following:

(A) Surface and/or underground coal mining permit,

(B) National Pollutant Discharge Elimination System permit,

(C) State air pollution control permit, and

(D) Any other applicable permits, such as a permit from the U.S. Forest Service; and

(iv) A detailed description of the proposed mining method and plan of operations, including estimates of coal to be extracted;

(v) If VER based on a takings analysis is required, information necessary to determine whether a compensable takings would occur if VER were denied shall be provided, including information on the following factors as relevant: information on the economic impact of VER denial, including information on the value and economic feasibility of all other possible uses of the property, and an appraisal of the fair market value of the property if VER is granted and if denied; information on the investment-backed expectations of the owner on the applicable effective date of the prohibition, including a description of the actions and costs incurred by the owner by the effective date of the prohibition that establish the reasonable investment-backed expectations of that owner to mine by the intended method; and information on the impact of the intended surface coal mining operation on the purposes, value, and uses of the area designated under section 522(e) to establish whether the proposed operation would have a nuisance-like effect;

(vi) All information on the feasibility of extracting coal from the property in question by methods other than the

proposed mining method, including copies of technical reports and analyses; and

(vii) Any other information requested by the regulatory authority, or which the VER requester believes will support the claim.

(2) Upon receipt of a complete application for a surface coal mining and reclamation operation permit, the regulatory authority shall review the application to determine whether surface coal mining operations are limited or prohibited under § 761.11 on the lands which would be disturbed by the proposed operations.

* * * * *

(c) Where the proposed operation would include Federal lands within the boundaries of any national forest, and the person seeks a determination that mining is permissible under § 761.11(b), the person shall submit a request for such a determination to the Director. The regulatory authority shall not issue a permit for the proposed operation until the findings required by section 522(e)(2) of the Act have been made.

* * * * *

(h) A decision by the regulatory authority on a person's request for a determination of valid existing rights or a determination that surface coal mining operations existed on the date of enactment shall be in writing and shall set forth the relevant findings of fact and conclusions, and shall give the reasons for the conclusions.

(i) A determination by the regulatory authority that a person holds or does not hold valid existing rights or that surface coal mining operations did or did not exist on the date of enactment shall be subject to administrative and judicial review under sections 775.11 and 775.13 of this chapter.

## SUBCHAPTER G—SURFACE COAL MINING AND RECLAMATION OPERATIONS

### Permits and Coal Exploration Systems Under Regulatory Programs

## PART 772—REQUIREMENTS FOR COAL EXPLORATION

8. The authority citation for part 772 continues to read as follows:

**Authority:** 30 U.S.C. 1201 *et seq.*, as amended; 16 U.S.C. 470 *et seq.*, and Pub. L. 100-34.

9. Section 772.14 is amended by adding a new paragraph (b)(5) to read as follows:

**§ 772.14 Commercial use or sale.**

* * * * *

(b) * * *

(5) For the areas described under § 761.11 of this chapter, a demonstration that the owner of the coal possesses valid existing rights.

(**Note:** This Appendix will not appear in the Code of Federal Regulations.)

## APPENDIX A—GUIDELINES FOR THE EVALUATION OF RISK AND AVOIDANCE OF UNANTICIPATED TAKINGS FOUND IN PART 761

The following guidelines include excerpts from the "Attorney General's Guidelines for the Evaluation of Risk and Avoidance of Unanticipated Takings," issued June 30, 1988 (hereafter Attorney General's Guidelines). The excerpts include materials pertinent to an evaluation of regulatory takings issues. OSM is also providing commentary to indicate how the Attorney General's guidelines relate more specifically to VER takings analyses under SMCRA and implementing State and Federal regulatory programs. OSM is providing these materials to give a summary of the types of issues which are most likely to arise in a VER determination evaluating whether a compensable taking would occur if the prohibitions of section 522(e) of SMCRA were applied to a surface coal mining operation.

As noted in the preamble to the proposed VER rule, a takings analysis is case-specific, and these guidelines cannot be considered to establish a formula for a regulatory takings analysis. However, the guidelines do provide clear and concise guidance for OSM and State use in VER determinations involving a takings standard. The Attorney General's Guidelines have been reviewed by the Department of Justice, the Office of the President, and by the Congressional Research Service, and are widely regarded as a useful summary of current takings law.

As takings case law develops, any applicable changes in takings standards and principles would need to be incorporated in a takings analysis which is part of a VER determination.

### General Principles and Assessment Factors

(Material excerpted from the Attorney General's Guidelines is identified below. Parenthetical references are given to the page numbers at which the excerpted materials appear in the Guidelines. Roman numerals in the headings of the excerpts are those in the Attorney General's Guidelines.)

These guidelines discuss the general principles and factors involved in a takings assessment, to assist the regulatory authority to predict whether a prohibition of surface coal mining operations under section 522(e) of SMCRA would constitute a compensable taking. The discussion includes:

(1) Underlying premises of the Fifth Amendment;

(2) The nature of a compensable regulatory taking;

(3) Protection of public health and safety; and

(4) The current legal criteria for analyzing takings factors.

*Section V(A)—Underlying Premises of the Fifth Amendment* (pp. 11-12)

1. The Fifth Amendment provides that "private property [shall not] be taken for public use, without just compensation." However, the rights of property owners are not absolute and government may, within limits, regulate the use of property. Where those regulations amount to a taking of private property, government must pay the owner just compensation for the property rights abridged. The fact that the government's actions are otherwise constitutionally authorized does not mean that those actions cannot effect a taking. On the other hand, government may not take property except for a public purpose within its constitutional authority, and only then, on the payment of just compensation.

2. Government may become liable for the payment of just compensation to private property owners whose property permanently or temporarily has been so affected by governmental regulation as to have been effectively taken despite the fact that the government has neither physically invaded, confiscated, or occupied the property nor taken legal title to the property.

**Note:** A VER takings evaluation will predict whether this type of regulatory taking would take place (as compared to a taking which involves physical invasion or confiscation).

3. So long as an action having consequences sufficiently severe as to constitute a taking is within the constitutional authority of the government, and the action taken is expressly or impliedly authorized by Congress, the just compensation obligation will attach regardless of whether government contemplated or intended the taking to result. The private property owner can obtain compensation by filing what is called an "inverse condemnation" suit.

*Section V(B)(3)—Regulatory Takings (pp. 13-14)*

Takings may occur when permanent or temporary government actions result in the physical occupancy of property, the physical invasion of property, or the regulation of property.

**Note:** These guidelines discuss the evaluation of circumstances when regulations of property may result in a compensable taking:

a. Like physical occupations or invasion, regulations which affects the value, use, or transfer of property may constitute a taking if

it goes too far.[1] Regulation has gone too far and may result in takings liability if:

i. The regulation in question does not substantially advance a legitimate governmental purpose; it is not enough that the regulation or action might rationally advance the purpose purported to be served; or

ii. In assessing the character of the government action, the economic impact of the action on the property interest involved, the extent to which the regulation interferes with the reasonable expectations of the owner of the property interest, and other relevant factors, justice and fairness require that the public, not the private property owner, pay for the public use.[2]

b. Regulatory actions that closely resemble, or have the effect of, a physical invasion or occupation of property are more likely to be found to be takings.[3] The greater the deprivation of use, the greater the likelihood that a taking will be found.

c. Regulation of an individual's property must not be disproportionate, within the limits of existing information or technology, to the degree to which the individual's property is contributing to the overall problem. Thus, regulatory actions designed to compel public benefits, rather than prevent privately imposed harms, are also more likely to be takings.

*Section V(C)(2)—Protection of Public Health and Safety (pp. 15–16).*

Policies or actions undertaken to protect public health and safety are ordinarily given greater latitude by courts before being held to give rise to takings. For purposes of that deference, however, the Supreme Court has ruled that "public health and safety" is not coextensive with the government's power to act. Public health and safety represents a component of that broader power. Again, that governmental power exists does not mean that its exercise is free of takings concerns. The deference discussed here extends only to public health and safety issues.

a. Where public health and safety is the asserted regulatory purpose, then the health and safety risk posed by the property use to be regulated must be identified with as much specificity as possible and should be "real and substantial." That is, it must be more than speculative. It must present a genuine risk of harm to public health and safety and the claim of risk of harm must be supported by meaningful evidence, in light of available technology and information, that such harm may result from the use to be regulated.

b. Any action taken to regulate property use for public health and safety purposes must address the health and safety risk; that is, it must be designed to counter the identified risk and must substantially advance the public health and safety purpose. The action should also, within the limits of available technology and information, be no more restrictive than necessary to alleviate the health and safety risk created by the use to be regulated.

c. In assessing these issues, an agency should examine the following factors:

i. The certainty that the property use to be regulated poses a health and safety risk in the absence of government action; and

ii. The severity of the injury to public health and safety should the identified risk materialize, based on the best available information in the field involved.

From the perspective of a takings implications analysis, the greater the certainty or the greater the severity, the more stringent measures are justified.

d. Although the ideal is that the response taken to counter the risk be "no greater than" the risk posed, reasonable proportionality presupposes available technology and information.

*Section V(D)(2)—Regulatory Takings Evaluation Criteria (pp. 17–19)*

Note: This section of the Guidelines discusses the three key factors relevant to a takings analysis. Takings case law indicates that sometimes one or two, but not all three categories are considered in detail in a court's takings analysis; and that it may be reasonable in some circumstances to find that anlaysis of one or more factors is indicative of a compensable taking, but that on balance, the greater weight of the factors supports a finding that there would be no compensable taking (or vice versa).

When evaluating policies or actions for takings implications, the following criteria will apply. These criteria will form the basis for the assessment of takings implications

* * *

*a. Character of the Government Action*

In assessing the character of the government action, an agency should examine:

i. The purpose intended to be served by the enabling statute, where the policy or action is taken pursuant to statute. Agencies should examine both the legislative history and the operative terms of the statute to determine that a legitimate purpose identified in the statute is being served.

Note: The legislative purpose of Section 552(e) of SMCRA was to designate those lands that Congress had determined were, by their nature, incompatible with surface coal mining operations, and should be so designated in SMCRA. H.R. Rep. No. 218, 95th Cong., 1st Sess. 95 (1977). That is, Section 522(e) lists those lands in which the public interest requires that surface coal mining operations should not be allowed. The categories are set forth in the proposed rule which this appendix accompanies.

ii. Whether the policy or action will substantially advance a legitimate public purpose of the enabling statute, where the policy or action is in furtherance of obligations imposed or authorized by statute. The proposed policy or action both must have the purpose of furthering, and must substantially further, the purpose embodied in the statute. It is not enough that the policy or action or regulation might rationally advance the purpose purported to be served.

Note: If a VER applicant is found not to have VER, the resulting prohibition of a surface coal mining operation would be consistent with and would substantially further Congressional intent to prohibit surface coal mining operations in the Section 522(e) area. Congress stated that surface coal mining operations would be incompatible with Section 522(e) areas, even though environmental protection standards would otherwise apply. Therefore, Congress precluded the potential impacts of even well-regulated surface coal mining operations on the public interest in these areas. The precluded impacts include muisance-like impacts on public health and safety and on the use, purpose and value of the protected areas.

iii. The degree to which the property-related activity or use that is the subject of the proposed policy or action contributes to a harm that the proposed policy or action is designed to address. The less direct, immediate, and demonstrable the contribution of the property-related activity to the harm to be addressed, the greater the risk that a taking will have occurred.

Note: The legislative history indicates that Congress has already found that surface coal mining operations in general are generally incompatible with areas designed in Section 522(e). Further discussion of this issue in the takings analysis would cover how the proposed surface coal mining operation would harm the public interest in the particular area in question. Surface mining in a cemetery, for example, would be likely to make a direct, immediate and demonstrable contribution to the harm addressed by Section 522(e) of SMCRA.

iv. The extent to which the intended policy or action totally abrogates a property interest which has been historically viewed as an essential stick in the bundle of property rights.

Note: For example, if the determination is that the applicant has not demonstrated VER, will the applicant be effectively denied the right to mine the only commercially valuable mineral on the property? If so, under those circumstances, is that right to mine a property interest which has been historically viewed as an essential stick? The answer to this question is an ad hoc determination depending on all the facts of the particular situation. If VER is denied, will the applicant be effectively denied the opportunity to sell or otherwise dispose of the coal? If so, is that opportunity to dispose of the coal, under those circumstances, an essential stick?

*b. Economic Impact of the Proposed Policy or Action*

In assessing the economic impact of the proposed policy or action, an agency should examine:

i. To the extent reasonably possible, what economic and property interests will be, or are likely to be, affected by the proposed policy or action. In that context, economic

[1] *Pennsylvania Coal Company* v. *Mahon*, 260 U.S. 393 (1922); *Hodel* v. *Irving*, 107 S. Ct. 2076 (1987); *Nollan* v. *California Coastal Commission*, 107 S. Ct. 3141 (1987).

[2] *Pennsylvania Coal* v. *Mahon*, 260 U.S. 393 (1922); *Penn Central Transportation Company* v. *New York City*, 438 U.S. 104 (1978); *Agins* v. *City of Tiburon*, 447 U.S. 255 (1980); *First English Evangelical Lutheran Church of Glendale* v. *Los Angeles County*, 107 S. Ct. 2378, 2389, n.10 (1987).

[3] See, *Nollan* v. *California Coastal Commission*, 107 S. Ct. 2076 (1987).

impact should be considered as to each property interest recognized by the applicable law.

ii. The likely degree of economic impact on identified property and economic interests;

iii. To the extent reasonably possible, among other relevant factors, the character and present use of the property, the anticipated duration of the proposed or intended action, and variations in state law;

iv. Whether the proposed policy or action carries benefits to the private property owner that offset or otherwise mitigate the adverse economic impact of the proposed policy or action; and,

v. Whether alternative actions are available that would achieve the underlying lawful governmental objective and would have a lesser economic impact.

*c. Interference With Reasonable Investment-Backed Expectations*

To the extent reasonably possible, an agency should examine the degree to which the proposed policy or action will interfere with reasonable, investment-backed expectations of those private property owners affected by the proposed action, even if such expectations are not formally recognized as property interests under the generally applicable law.

## Overview of Leading Federal Takings Decisions

The Attorney General's Guidelines contain an appendix that surveys takings case law and identifies the leading cases on which the elements of current takings jurisprudence are based. Portions of Part III, Taking Implications Analysis: General Principles and Framework, of the appendix are excerpted below to assist the evaluation of takings implications.

*Fairness and Justice Under the Fifth Amendment*

Ratified in 1791, the Fifth Amendment provides, for pertinent purposes, "nor shall private property be taken for public use without just compensation." Its terms do not prohibit the taking of private property for lawful purposes. Rather, they operate "to secure compensation in the event of otherwise proper interference amounting to a taking." [4] The constitutional guarantee of the Amendment precludes government "from forcing some people alone to bear public burdens which, in all fairness and justice, should be borne by the public as a whole." [5]

*Focus on Impact of Actions and Self-Executing Character*

The assessment of governmental interference under the Amendment turns ultimately not on what the government may say, or what it may intend, but on the impact of its actions.[6] Moreover, where the interference effects a taking, that governmental action implicates a "constitutional obligation to pay just compensation."[7] The Amendment has a "self-executing character * * * with respect to compensation." [8]

*Fact Sensitive Analysis*

The takings analysis proceeds in the particular factual circumstances of the governmental impact on property. This leads to what have been described as "ad hoc" analyses in the context of particular facts. * * * [9]

*Public Use Requirement*

The Amendment reaches the taking of private property for public use. The Court will not "substitute its judgement for a legislature's judgement as to what constitutes a public use 'unless the use be palpably without reasonable foundation.' " [10] Although analysis of the legislative public purpose may include the legislative statement of purpose and the statute will control any inconsistency between the former and the latter.[11] That the Legislature has found a public use does not necessarily, however, answer the more critical question—for Fifth Amendment purposes—of whether the lawful exercise of governmental power effects a compensable taking.

*Property Interests Within the Fifth Amendment*

"Property interests * * * are not created by the constitution." [12] Instead, "they * * * are created and their dimensions are defined by existing rules or understandings that stem from an independent source such as state law." [13]

*Congressional Authorization to Act*

Congressional authorization to undertake the government action at issue is an essential element of a taking. * * * The test is not whether Congress authorized or even contemplated a taking effect from action pursuant to its purpose. Rather, the test is whether the government conduct said to give rise to the taking was authorized.[14] Where Congress has acted so as to preclude implication of authority for takings purposes, however, a taking cannot lie.[15]

**Note:** At the State level, the test is whether the regulatory authority conduct said to give rise to a taking was authorized by State statute or by other sufficient authority under State law.

*Regulatory Takings*

Governmental regulatory conduct may go "too far", thus requiring just compensation.[16]

The Court has indicated, in land use regulation contexts, that the line will be crossed when a regulation does "not substantially advance legitimate state interests * * * or denies an owner economically viable use of his land." [17] The existence of a permit system, for instance, and the requirement that an individual resort to the system before engaging in a property use does not effect a taking per se.[18] "Only when a permit is denied and the effect of the denial is to prevent 'economically viable' use of the land in question can it be said that a taking has occurred." [19]

*Proportionality of Burden to Risk Created*

It is also important * * * to demonstrate, to the extent possible, that the restriction * * * is proportional to the contribution to * * * risk * * * by the restricted use.[20]

*Three-Part Regulatory Taking Analysis*

* * * The location of the (takings) "line" requires careful consideration of what has come to be viewed as a three-part regulatory taking test: (1) The character of the governmental action; (2) the economic impact of the action; and (3) the extent of interference with reasonable investment-backed expectations.

*Examples of Application of Three-Part Analysis*

The *ad hoc* three-part test is not fully predictable, and therefore, proposed actions and policies should be sensitive to takings implications even if the case precedents finding a taking were decided on somewhat

---

[4] *First English Evangelical Lutheran Church of Glendale* v. *County of Los Angeles*, 107 S. Ct. 2378, 2386 (1987).

[5] *Armstrong* v. *United States*, 364 U.S. 40, 49 (1959).

[6] *Hughes* v. *Washington*, 389 U.S. 290, 298 (1967); *Armstrong* v. *United States*, 364 U.S. at 48049.

[7] *First English Evangelical Lutheran Church of Glendale* v. *County of Los Angeles*, 107 S. Ct. at 2386.

[8] *United States* v. *Clarkes*, 445 U.S. 253, 257 (1980) (citations omitted), *quoted in First English Evangelical Lutheran Church of Glendale* v. *County of Los Angeles, id.*

[9] *See Hodel* v. *Irving*, 107 S. Ct. 2076, 2082 (1987); *Kaiser Aetna* v. *United States*, 444 U.S. 164, 175 (1979); *Penn Central Transportation Co.* v. *New York City*, 438 U.S. 104, 124 (1978).

[10] *Id. See also Berman* v. *Parker*, 348 U.S. 26, 33 (1954) (comprehensive use of eminent domain power for slum redevelopment).

[11] *See Keystone Bituminous Coal Association* v. *De Benedictis*, 107 S. Ct. 1232, 1243, n. 16 (1987) ("examine the operative provisions of a statute, not just its stated purpose, in assessing its true nature").

[12] *Webb's Fabulous Pharmacies, Inc.* v. *Beckwith*, 449 U.S. 155, 161 (1980).

[13] *Id. See also Ruckelshaus* v. *Monsanto Company*, 467 U.S. 986, 1001 (1983) (trade secret property right).

[14] *See Florida Rock Industries* v. *United States*, 791 F.2d 893, 898 (Fed. Cir. 1986), citing *Portsmouth Harbor Land and Hotel Company* v. *United States*, 260 U.S. 327 (1922); *HBH Land Company* v. *United States*, 576 F.2d 317, 319 (Ct. Cl. 1978); *Barnes* v. *United States*, 538 F.2d 865, 871 (Ct. Cl. 1976).

[15] *NBH Land Company* v. *United States*, 576 F.2d at 319; *Southern California Financial Corporation* v. *United States*, 634 F.2d 521, 524 (Ct. Cl. 1980).

[16] *Pennsylvania Coal* v. *Mahon*, 260 U.S. 393, 415 (1922) (statute prohibited the mining of anthracite coal in a manner causing surface subsidence and damage to overlying structures).

[17] *Agins* v. *Tiburon*, 447 U.S. 255, 260 (1980) (zoning density restrictions neither prevented best use of property nor extinguished a "fundamental" attribute of ownership), cited in *Nollan* v. *California Coastal Commission*, 107 S. Ct. 3141, 3146 (1987) and *United States* v. *Riverside Bayview Homes, Inc.*, 106 S. Ct. 455, 459 (1985).

[18] *Id.*

[19] *Id.*

[20] *Nollan* v. *California Coastal Commission*, 107 S. Ct. 3141, 3143 n.4 (1987) ("If . . . singled out to bear the burden . . . although they had not contributed to it more than other . . . landowners . . . [the action] might violate either the . . . Takings Clause or the Equal Protection Clause.").

different facts. For example, even on the same subject matter, application of the tests can result in different takings conclusions. For instance, in *Keystone Bituminous Coal Association* v. *De Benedictis*, 107 S. Ct. 1232, 1242 (1987), the Court considered recent Pennsylvania legislation which—like the Kohler Act analyzed in *Mahon*—addressed concerns of subsidence damage associated with coal mining activities. The opinion finds the *Mahon* line unviolated for two reasons.

First, the 1966 Subsidence Act contained specific legislative findings that important public interests warranted the regulation, unlike the Kohler Act which involved "a balancing of the private economic interests of coal companies against the private interests of surface owners." [21] Thus, the 1966 legislation brought to bear the "substantial" public interest in "preventing activities similar to public nuisances".[22] * * * In determining the purposes, the Court emphasized that, although legislative declarations were important, the analysis required judicial consideration of the operative terms of the statute.[23]

Second, Keystone petitioners demonstrated no material interference with reasonable investment backed expectations on the part of the coal industry. Specifically, the cases presented a facial challenge to the 1966 Act—essentially, an allegation that the mere enactment of the legislation constituted a taking.[24] Petitioners made no claim that the 1966 Act made continued mining of bituminous coal commercially impracticable. Nor did the Court have before it any evidence that the Act's requirement to leave certain coal in place had made mining unprofitable in those locations. These factors stood in contrast to Mahon's finding that the Kohler Act rendered mining commercially impracticable. Petitioners' "support estates" (which under Pennsylvania law included the right to remove coal underlying the surface or to leave those layers intact and which could be owned by either the surface or mineral estate owner), in the Court's view, had value only in that they protected or enhanced the mineral estate was simply one strand in the bundle of rights owned by the coal owner. The Court stressed that petitioners "retain(ed) the right to mine virtually all of the coal in their mineral estates". Thus, the burden imposed on the surface estate did not constitute a taking.

*Economic Impact Factors*

Among the factors which may be relevant in assessing the economic impact of governmental action are the character of the property, the volatility of property values, variations in state property laws affecting the utility of the property, market, regional and demographic information, the existence of irretrievable economic opportunities, the anticipated duration of the proposed action, and the extent to which the property owner may have enhanced the existing use of the property. This list of factors is illustrative only and is neither exhaustive nor obligatory.

*Regulation in the Service of Public Health and Safety*

In evaluating government regulatory conduct under the Takings Clause, courts have evidenced a "hesitance" to find takings where the public purpose of the underlying legislation is to "restrain[] uses of property that are tantamount to public nuisances . . ." [25] Important to claiming the deference shown in such public nuisance regulation is recognition of the concept of "reciprocity of advantage"—that, in demonstrable ways, each who is regulated benefits from the similar regulation of others.[26]

*Deference Not Coextensive with "Public Use"*

Although "public use" for purposes of the Fifth Amendment is coterminous with the governmental police power * * * the deferential "nuisance exception" discussed here is not coextensive with the police power.[27] In other words, even when governmental action is designed to protect health and safety, some consideration of that action's economic impact may nevertheless be appropriate. Thus, *Florida Rock* v. *United States*, 791 F.2d 893, 902 (Fed. cir. 1986) has cautioned that a "regulation under the Clean Water Act can be a taking if its effect on a landowner's ability to put his property to productive use is sufficiently severe."

*Executive Order and Guidelines Requirements*

With respect to public health and safety directed actions, * * * management must:

i. Identify clearly, with as much specificity as possible, the public health or safety risk created by the private property use that is the subject of the proposed action;

ii. Establish that such proposed action substantially advances the purpose of protecting public health and safety against the specifically identified risk;

iii. Establish to the extent possible, that the restrictions imposed on the private property are not disproportionate to the extent to which the use contributes to the overall risk * * *

*Examples of Regulatory Takings Litigation*

Although clearly not exhaustive, federal regulatory takings litigation include the following examples: *Yuba Goldfields* v. *United States*, 723 F.2d 884 (Fed. Cir. 1983) (taking: government assertion of mineral rights title, was later found inaccurate by court ruling, and related "prohibition" of dredging activity); *Deltona Corporation* v. *United States*, 657 F.2d 1184 (Ct. Cl. 1981) (no taking: multi-stage development; permits as to early stages granted, but two permits under section 10 of the Rivers and Harbors Act and section 404 of the Clean Water Act denied as to latter stages; where many "economically viable uses" remain denial of highest and best use not a taking); *Benenson* v. *United States*, 548 F.2d 939 (Ct. Cl. 1977) (taking: statutory requirements for development of Pennsylvania Avenue property, in combination with congressionally imposed moratorium, in interest of preserving building facade deprived owner of any reasonable use); *Snowbank Enterprises* v. *United States*, 6 Cl. Ct. 476 (1984) (no taking: regulatory constraints imposed by Boundary Waters Canoe Wilderness Act on access not so pervasive as to amount to a taking); * * *

[FR Doc. 91-17097 Filed 7-17-91; 8:45 am]

BILLING CODE 4310-05-M

[21] 107 S. Ct. at 1242.

[22] 107 S. Ct. at 1246.

[23] 107 S. Ct. at 1243, n.16

[24] 107 S. Ct. at 1242.

[25] *Keystone Bituminous Coal Association* v. *De Benedicts*, 107 S. Ct. at 1245.

[26] *Id. Cf. Mugler* v. *Kansas*, 123 U.S. 623 (1887) (prohibition of liquor sale in interest of health, safety, or morals of public); *Euclid* v. *Ambler*, 272 U.S. 365 (1926) (in a facial challenge, conclusion that noise and traffic might be very nearly a public nuisance in an area; thus regulations bore substantial relationship to public welfare); *Miller* v. *Schoene*, 276 U.S. 272 (1928) (nuisance rationale sustains state's destruction of cedar rust trees); *Goldblatt* v. *Hempstead*, 369 U.S. 590, 595–598 (1961) (safety based regulation prohibiting further excavation of sand and gravel mine below water table not unreasonable; plaintiffs' failed to meet burden of showing that prohibition would further reduce value of property or that regulation unreasonable).

[27] *Keystone Bituminous Coal Association* v. *De Benedictis*, 107 S. Ct. at 1245, n.20.

federal register

Thursday
July 18, 1991

# Part VI

# Department of the Interior

## Office of Surface Mining Reclamation and Enforcement

30 CFR Parts 761, 784 and 817

**Permanent Regulatory Program; Underground Mining Permit Application Requirements and Performance Standards—Subsidence Control; Notice of Inquiry; Proposed Rule**

**DEPARTMENT OF THE INTERIOR**

**30 CFR Parts 761, 784 and 817**

## Permanent Regulatory Program; Underground Mining Permit Application Requirements—Subsidence Control Plan; Underground Mining Performance Standards—Subsidence Control

**AGENCY:** Office of Surface Mining Reclamation and Enforcement, Interior.

**ACTION:** Notice of inquiry.

**SUMMARY:** The Office of Surface Mining Reclamation and Enforcement (OSM) of the Department of the Interior (DOI) is seeking the views of the public and other interested parties on a potential rulemaking. OSM seeks comments on the necessity for, and possible scope of, revisions to its current regulations applicable to underground coal mining and control of subsidence affecting lands and structures. OSM is particularly interested in public comments concerning the need to modify or provide additional guidance in such areas as the statutory distinctions and operational differences between underground and surface coal mines; the definition of "material damage" as the term is used in section 516(b)(1) of the Surface Mining Act; performance of pre-subsidence surveys; the extent of the obligation to repair structures damaged by subsidence; replacement of water supplies damaged by underground mining; prevention of subsidence damage, even where planned subsidence is to occur; and sufficiency of bond requirements when subsidence-caused damage occurs. OSM is also particularly interested in comments on the adequacy of State laws and regulations to address these issues. Commenters should be aware that based upon a recent DOI Solicitor's opinion, the prohibitions of section 522(e) of the Surface Mining Act and 30 CFR 761.11 do not apply to subsidence.

**DATES:** *Written comments:* OSM will accept written comments on the above issues until 5 p.m. Eastern time on September 3, 1991.

*Public meetings:* If sufficient interest is expressed, OSM will hold a public meeting in Washington, DC, at a time and date to be announced before the hearing. OSM will accept requests for a public meeting until 5 p.m. Eastern time on August 8, 1991.

Individuals wishing to attend but not speak at any meeting should contact the person identified under "**FOR FURTHER INFORMATION CONTACT**" beforehand to verify that the meeting will be held.

**ADDRESSES:** *Written comments:* Hand-deliver to the Office of Surface Mining Reclamation and Enforcement, Administrative Record, room 5131L, 1100 L Street NW., Washington, DC; or mail to the Office of Surface Mining Reclamation and Enforcement, Administrative Record, room 5131L, U.S. Department of the Interior, 1951 Constitution Avenue NW., Washington, DC 20240.

*Public meetings:* The address and time of any meeting that may be scheduled will be announced prior to the meeting.

*Requests for public meetings:* Requests for public meetings may be made by contacting the person specified under "**FOR FURTHER INFORMATION CONTACT**" by the time specified under "**DATES.**"

**FOR FURTHER INFORMATION CONTACT:** Patrick W. Boyd, Branch of Federal and Indian Programs, Office of Surface Mining Reclamation and Enforcement, U.S. Department of the Interior, 1951 Constitution Avenue NW., Washington, DC 20240; telephone (202) 208-2564 or (FTS) 268-2564.

**SUPPLEMENTARY INFORMATION:**

### I. Public Comment Procedures

*Written Comments*: Written comments submitted on the issues should be specific and should explain the reason for any recommendation. Where practicable, commenters should submit two copies of their comments (see "**ADDRESSES**").

*Public Meetings*: OSM will hold public meetings upon request only. If a meeting is held, it will continue until all persons wishing to speak have been heard. To assist the transcriber and ensure an accurate record, OSM requests that persons who speak at a meeting give the transcriber a written copy of their remarks.

### II. Rulemaking Under Consideration

On March 13, 1979, OSM promulgated permanent program rules as required by section 501(b) of the Surface Mining Control and Reclamation Act of 1977 (Pub. L. 95-87, 30 U.S.C. 1201 *et seq.*) (SMCRA or the Act). See 44 FR 14902. The rules pertaining to subsidence control at underground coal mines were set forth at 30 CFR 817.121, 817.122, 817.124 and 817.126. The permit application information requirements pertaining to subsidence control were set forth at 30 CFR 784.20. These rules implemented section 516(b)(1), (7), (11) and (c) of SMCRA. Those SMCRA provisions include requirements that underground coal mine operators prevent subsidence causing material damage to the extent feasible and maintain the value and reasonably foreseeable use of surface lands; protect offsite areas from damages; and minimize adverse impacts on fish, wildlife and related environmental values. A limited exception exists where planned subsidence is used in a predictable and controlled manner.

On June 1, 1983, OSM promulgated a number of changes to the subsidence control rules. The subsidence control performance standards were consolidated in 30 CFR 817.121 and 817.122, while the corresponding permit application information requirements remained at 30 CFR 784.20.

In 1987, OSM issued a rule requiring underground coal mine operators to correct subsidence-caused material damage to structures or to compensate the owner of such structures only to the extent required under State law. The U.S. District Court for the District of Columbia found that the State law limitation was inconsistent with SMCRA and remanded the rule in February 1990. Recently, in *National Wildlife Federation* v. *Lujan*, No. 90-5114 (D.C. Cir. March 22, 1991), the U.S. Court of Appeals for the D.C. Circuit reversed the decision of the district court. The D.C. Circuit held that SMCRA does not expressly mandate the Secretary to require repair of, or compensation for, subsidence damage to structures. The court deferred to the Secretary, found the State law limitation to be based on a permissible interpretation of SMCRA and upheld the regulation as reasonable.

Under section 516 of SMCRA, OSM has authority to regulate subsidence and other surface effects of underground coal mining. Through this notice of inquiry, OSM is attempting to identify any environmental values or public interests that warrant regulatory protection in addition to that already provided by the existing regulations.

OSM is seeking the views of the public and other interested parties on the necessity for and possible scope of revisions to its current regulations applicable to underground coal mining and control of subsidence affecting lands and structures. OSM is particularly interested in public comments concerning the need to modify existing regulations or provide additional guidance in such areas as the statutory distinctions and operational differences between underground and surface coal mines; the definition of "material damage" as the term is used in section 516(b)(1) of SMCRA; performance of pre-subsidence surveys; the extent of the obligation to repair

structures damaged by subsidence; replacement of water supplies damaged by underground mining; prevention of subsidence damage, even where planned subsidence is to occur; sufficiency of bond requirements when subsidence-caused damage occurs; and any other relevant issues. OSM is also particularly interested in comments on the adequacy of State laws and regulations to address these issues.

OSM also solicits comments on the economic and environmental impacts that would be associated with any suggested changes to the underground coal mining or subsidence control regulations.

Section 522(e) of the Surface Mining Control and Reclamation Act of 1977 (Pub. L. 95–87, 30 U.S.C. 1201 *et seq.*) (SMCRA or the Act) prohibits surface coal mining operations in certain areas, subject to valid existing rights and except for those operations which existed on August 3, 1977. Lands protected under section 522(e) include National Parks; National Wildlife Refuges; National Trails; wilderness areas; Wild and Scenic Rivers, including study rivers; National Recreation Areas; National Forests; publicly owned parks; the National Register of Historic Places; a 100-foot buffer zone around public roads; a 300-foot buffer zone around occupied dwellings, public buildings, schools, churches, community or institutional buildings and public parks; and a 100-foot buffer zone around cemeteries.

Commenters should be aware that the issue raised before the U.S. District Court for the District of Columbia in 1985, of whether and to what degree subsidence is covered by the mining prohibitions set forth in section 522(e) of the Act, has been resolved.

The issue of the applicability of sections 522(e) (4) and (5) prohibitions to underground mining was raised in In re Permanent Surface Mining Regulation Litigation II, Round III, 620 F. Supp. 1519 (D.D.C. July 15, 1985) (hereafter PSMRL II, Round III). Plaintiffs alleged that the regulations at 30 CFR 761.11 (d) through (g), which prohibit surface coal mining operations within specified distances "measured horizontally" of the listed features and facilities, do not "clearly and explicitly prohibit surface impacts of underground mining within the specified protected areas set forth in section 522." In its decision, the court affirmed the current regulations, stating that they track the statutory language, while noting that the Secretary had committed to a new rulemaking (50 FR 13250, April 3, 1985) with respect to the impact of section 522(e) (4) and (5) on underground mining. See PSMRL II, Round III, 620 F. Supp. 1553. On December 27, 1988, OSM issued a proposed rule that addressed the issue of the applicability of section 522(e) to subsidence. The proposal was withdrawn for further study on July 21, 1989. See 54 FR 30557.

The Office of the Solicitor, DOI, has recently completed an independent review of this issue and has concluded that the best intepretation of SMCRA is that subsidence is not a surface coal mining operation subject to the prohibitions of section 522(e), and section 516 of SMCRA contains sufficient authority to protect those environmental values that are also addressed in section 522(e). This opinion is based on the plain meaning of the definition of "surface coal mining operations" in section 701(28)(A) of SMCRA and the legislative history of the Act.

Based on its review of the Act and the legislative history, the comments received on the December 27, 1988, proposal, and the Solicitor's opinion, OSM has decided that no further rulemaking action is necessary in regard to the applicability of section 522(e) prohibitions to underground mining. The current regulations, at 30 CFR 761.11 (d), (e), (f) and (g), adequately address underground mining and appropriately apply the statutorily established buffer zones in a horizontal dimension only. No changes to the existing regulations are necessary.

OSM construes the definition of "surface coal mining operations" at SMCRA section 701(28)(A) and its existing rule at 30 CFR 700.5 not to include subsidence, and to include only (1) surface activities in connection with a surface coal mine and (2) surface activities in connection with those surface operations and impacts of an underground coal mine that are subject to section 516. Since only "surface coal mining operations" are prohibited within the areas protected by section 522(e), activities conducted beneath the surface of lands protected by section 522(e) are not prohibited, even if they may, at some time, result in subsidence. Rather, they are subject to regulation under section 516, which is the subject of this notice of inquiry.

Dated: July 10, 1991.

**Harry M. Snyder,**

*Director.*

[FR Doc. 91–17095 Filed 7–17–91; 8:45 am]

BILLING CODE 4310-05-M

federal register

Thursday
July 18, 1991

# Part VII

# Department of Health and Human Services

## National Institutes of Health

## Recombinant DNA Research: Actions Under the Guidelines; Notice

## DEPARTMENT OF HEALTH AND HUMAN SERVICES

### National Institutes of Health

### Recombinant DNA Research: Actions Under the Guidelines

**AGENCY:** National Institutes of Health, PHS, DHHS.

**ACTION:** Notice of Actions Under the NIH Guidelines for Research Involving Recombinant DNA Molecules.

**SUMMARY:** This notice sets forth seven actions to be taken by the Director, National Institutes of Health (NIH), under the May 7, 1986, NIH Guidelines for Research Involving Recombinant DNA Molecules (51 FR 16958).

**EFFECTIVE DATE:** July 18, 1991.

**FOR FURTHER INFORMATION CONTACT:** Additional information can be obtained from Dr. Nelson A. Wivel, Director, Office of Recombinant DNA Activities, Office of Science Policy and Legislation, National Institutes of Health, Building 31, room 4B11, Bethesda, Maryland 20892 (301) 496-9838.

**SUPPLEMENTARY INFORMATION:** Today seven actions on being promulgated under the NIH Guidelines for Research Involving Recombinant DNA Molecules. These seven actions were published for comment in the **Federal Register** of September 13, 1990 (55 FR 37846), December 27, 1990 (55 FR 53258), and April 29, 1991 (56 FR 19776), and reviewed and recommended for approval by the NIH Recombinant DNA Advisory Committee (RAC) at its meetings on October 16, 1990, February 4, 1990, and May 30-31, 1991.

### I. Background Information and Decisions on Actions Under the "NIH Guidelines"

*A. Revision of Appendix K of the "NIH Guidelines" Regarding Establishment of Guidelines for Level of Containment Appropriate to Good Industrial Large Scale Practices (GILSP)*

Revision of appendix K of the *NIH Guidelines* Regarding Establishment of Guidelines for Level of Containment Appropriate to Good Industrial Large Scale Practices (GILSP). In a letter dated June 28, 1990, the Industrial Biotechnology Association (IBA) and the Pharmaceutical Manufacturers Association (PMA) requested that the Recombinant DNA Advisory Committee revise appendix K of the *NIH Guidelines* to reflect a formalization of suitable containment practices and facilities for the conduct of large-scale experiments involving recombinant DNA-derived industrial microorganisms. This request included proposed definitions and requirements pertaining to the requested changes.

This request was published for comment in the **Federal Register** on September 13, 1990 (55 FR 37846).

During the RAC meeting on October 16, 1990, the members considered the recommendations made by the Revision of the *NIH Guidelines* Subcommittee. Following a discussion, it was decided that further modifications of appendix K were necessary. Accordingly, the matter was referred back to the subcommittee.

The Revision of the *NIH Guidelines* Subcommittee met on December 7, 1990, and developed recommendations to the Recombinant DNA Advisory Committee for their meeting on February 4, 1991.

This request was published in the **Federal Register** for comment on December 27, 1990 (55 FR 53258).

At the meeting of February 4, 1991, the Recombinant DNA Advisory Committee considered the recommendations of the Revision of the *NIH Guidelines* Subcommittee. The RAC, by a vote of 15 in favor, none opposed, and one abstention, approved a revision of appendix K which reads as follows.

**Appendix K. Physical Containment for Large-Scale Uses of Organisms Containing Recombinant DNA Molecules**

This part of the Guidelines specifies physical containment guidelines for large-scale (greater than 10 liters of culture) research or production involving viable organisms containing recombinant DNA molecules. It shall apply to large-scale research or production activities as specified in Section III-B-5 of the Guidelines. It is important to note that this appendix addresses only the biological hazard associated with organisms containing recombinant DNA. Other hazards accompanying the large scale cultivation of such organisms (e.g., toxic properties of products; physical, mechanical and chemical aspects of downstream processing) are not addressed and must be considered separately, albeit in conjunction with this appendix.

All provisions of the Guidelines shall apply to large-scale research or production with the following modifications:

- Appendix K shall replace portions of Appendix G when quantities in excess of 10 liters of culture are involved in research or production. Appendix K-II applies to GLSP; appendices G-I and G-II, as indicated in accompanying table, apply to Biosafety Levels (BL) BL1-LS, BL2-LS, and BL3-LS.
- The institution shall appoint a Biological Safety Officer (BSO) if it engages in large-scale research or production activities involving viable organisms containing recombinant DNA molecules. The duties of the BSO shall include those specified in section IV-B-4 of the Guidelines.
- The institution shall establish and maintain a health surveillance program for personnel engaged in large-scale research or production activities involving viable organisms containing recombinant DNA molecules which require BL3 containment at the laboratory scale. The program shall include: Preassignment and periodic physical and medical examinations; collection, maintenance and analysis of serum specimens for monitoring serologic changes that may result from the employee's work experience; and provisions for the investigation of any serious, unusual or extended illnesses of employees to determine possible occupational origin.

*Appendix K-I. Selection of Physical Containment Levels*

The selection of the physical containment level required for recombinant DNA research or production involving more than 10 liters of culture is based on the containment guidelines established in part III of the Guidelines. For purposes of large-scale research or production, four physical containment levels are established. The four levels set containment conditions at those appropriate for the degree of hazard to health or the environment posed by the organism, judged by experience with similar organisms unmodified by recombinant DNA techniques and consistent with good large scale practices. These are referred to as GLSP, BL1-LS, BL2-LS, and BL3-LS. The GLSP (Good Large-Scale Practice) level of physical containment is recommended for large-scale research or production involving viable, non-pathogenic, and non-toxigenic recombinant strains derived from host organisms that have an extended history of safe large scale use. Likewise, the GLSP level of physical containment is recommended for organisms such as those included in Appendix C that have built-in environmental limitations that permit optimum growth in the large scale setting but limited survival without adverse consequences in the environment. For those organisms that do not qualify for GLSP, the BL1-LS (Biosafety Level 1—Large-Scale) level of physical containment is recommended for large-scale research or production of viable organisms containing recombinant DNA molecules that require BL1 containment at the laboratory scale. The BL2-LS (Biosafety Level 2—Large Scale) level of physical containment is required for large-scale research or production of viable organisms containing recombinant DNA molecules that require BL2 containment at the laboratory scale. The BL3-LS (Biosafety Level 3—Large Scale) level of physical containment is required for large-scale research or production of viable organisms containing recombinant DNA molecules that require BL3 containment at the laboratory scale. No provisions are made for large-scale research or production of viable organisms containing recombinant DNA molecules that require BL4 containment at the laboratory scale. If necessary, these requirements will be established by NIH on an individual basis.

*Appendix K-II. GLSP Level*

Appendix K-II-A. Institutional codes of practice shall be formulated and implemented to assure adequate control of health and safety matters.

Appendix K-II-B. Written instructions and training of personnel shall be provided to assure that cultures of viable organisms containing recombinant DNA molecules are handled prudently and that the workplace is kept clean and orderly.

Appendix K-II-C. In the interest of good personal hygiene, facilities (e.g., handwashing sink, shower, changing room) and protective clothing (e.g., uniforms, laboratory coats) shall be provided that are appropriate for the risk of exposure to viable organisms containing recombinant DNA molecules. In addition, eating, drinking, smoking, applying cosmetics and mouth pipetting shall be prohibited in the work area.

Appendix K-II-D. Cultures of viable organisms containing recombinant DNA molecules shall be handled in facilities intended to safeguard health during work with microorganisms that do not require containment.

Appendix K-II-E. Discharges containing viable recombinant organisms shall be handled in accordance with applicable governmental environmental regulations.

Appendix K-II-F. Addition of materials to a system, sample collection, transfer of culture fluids within/between systems, and processing of culture fluids shall be conducted in a manner that maintains employee exposure to viable organisms containing recombinant DNA molecules at a level that does not adversely affect the health and safety of employees.

Appendix K-II-G. The facility's emergency response plan shall include provisions for handling spills.

Appendix K-III-A. Spills and accidents which result in overt exposures to organisms containing recombinant DNA molecules are immediately reported to the laboratory director. Medical evaluation, surveillance, and treatment are provided as appropriate and written records are maintained.

Appendix K-IV-M-8. The controlled area shall have a ventilation system that is capable of controlling air movement. The movement of air shall be from areas of lower contamination potential to areas of higher contamination potential. If the ventilation system provides positive pressure supply air, the system shall operate in a manner that prevents the reversal of the direction of air movement or shall be equipped with an alarm that would be actuated in the event that reversal in the direction of air movement were to occur. The exhaust air from the controlled area shall not be recirculated to other areas of the facility. The exhaust air from the controlled area may not be discharged to the outdoors without being HEPA filtered, subjected to thermal oxidation, or otherwise treated to prevent the release of viable organisms.

[Remainder of appendix K remains unchanged with the exception of the following: renumber so that appendix K-II-A becomes K-III-B; K-II-B becomes K-III-C; K-II-C becomes K-III-D; K-II-D becomes K-III-E; K-II-E becomes K-III-F; K-II-F becomes K-III-G; renumber appendix K-III to appendix K-IV; renumber appendix K-IV to appendix K-V.]

APPENDIX K.—COMPARISON OF GLSP AND BL-LS PRACTICES [1]

| Criterion [2] | GLSP | BL1-LS | BL2-LS | BL3-LS |
|---|---|---|---|---|
| 1 Formulate and implement institutional codes of practice for safety of personnel and adequate control of hygiene and safety measures. | K-II-A | | G-1 | |
| 2. Provide adequate written instructions and training of personnel to keep workplace clean and tidy and to keep exposure to biological, chemical or physical agents at a level that does not adversely affect health and safety of employees. | K-II-B | | G-11 ¶ 1 | |
| 3. Provide changing and handwashing facilities as well as protective clothing, appropriate to the risk, to be worn during work. | K-II-C | G-II-A-1-h | G-11-B-2-f | G-II-C-2-i. |
| 4. Prohibit eating, drinking, smoking, mouth pipetting, and applying cosmetics in the workplace. | K-II-C | G-II-A-1-d, G-II-A-1-e. | G-II-B-1-d, G-II-B-1-e. | G-II-C-1-c, G-II-C-1-d. |
| 5. Internal accident reporting | K-II-D | K-III-A | G-II-B-2-k and G-II-B-2-1. | G-II-C-2-q and G-II-C-2-r. |
| 6. Medical surveillance | NR | NR | do | Do. |
| 7. Viable organisms should be handled in a system that physically separates the process from the external environment (closed system or other primary containment). | NR | K-III-B | K-IV-A | K-V-A. |
| 8. Culture fluids not removed from a system until organisms inactivated | NR | K-III-C | K-IV-B | K-V-B. |
| 9. Inactivation of waste solutions and materials with respect to their biohazard potential. | K-II-E | K-III-C | K-IV-B | K-V-B. |
| 10. Control of aerosols by engineering or procedural controls to prevent or minimize release of organisms during sampling from a system, addition of materials to a system, transfer of cultivated cells, and removal of material, products, and effluents from a system. | Minimize Procedure K-II-F. | Minimize Engineer K-III-D. | Prevent Engineer K-IV-C. | Prevent Engineer K-V-C. |
| 11. Treatment of exhaust gasses from a closed system to minimize or prevent release of viable organisms. | NR | Minimize K-III-E | Prevent K-IV-D | Prevent K-V-C. |
| 12. Closed system that has contained viable organisms not to be opened until sterilized by a validated procedure. | NR | K-III-F | K-IV-E | K-V-E. |
| 13. Closed system to be maintained at as a low pressure as possible to maintain integrity of containment features. | NR | NR | NR | K-V-F. |
| 14. Rotating seals and other penetrations into closed system designed to prevent or minimize leakage. | NR | NR | Prevent K-IV-F | Prevent K-V-G. |
| 15. Closed system shall incorporate monitoring or sensing devices to monitor the integrity of containment. | NR | NR | K-IV-G | K-V-H. |
| 16. Validated integrity testing of closed containment system | NR | NR | K-IV-H | K-V-I. |
| 17. Closed system to be permanently identified for record keeping purposes | NR | NR | K-IV-I | K-V-J. |
| 18. Universal biohazard sign to be posted on each closed system | NR | NR | K-IV-J | K-V-K. |
| 19. Emergency plans required for handling large losses of cultures | K-II-G | K-III-G | K-IV-K | K-V-L. |
| 20. Access to the workplace | NR | G-II-A-1-a | G-II-B-1-a | K-V-M. |
| 21. Requirements for controlled access area | NR | NR | NR | K-V-M&N. |

NR = not required.

*Appendix K. Footnotes.*

1. This table is derived from the text in Appendices G and K and is not to be used in lieu of Appendices G and K.

2. The criteria in this grid address only the biological hazard associated with organisms containing recombinant DNA. Other hazards accompanying the large scale cultivation of such organisms (e.g., toxic properties of products; physical, mechanical and chemical aspects of downstream processing) are not addressed and must be considered separately, albeit in conjunction with this grid.

*Appendix K—Definitions to Accompany Containment Grid and Proposed Modification of Appendix K*

*Accidental release*—The unintentional discharge of a microbiological agent (i.e., microorganism or virus) or eukaryotic cell due to a failure in the containment system.

*Biological barrier*—An impediment (naturally occurring or introduced) to the infectivity and/or survival of a microbiological agent or eukaryotic cell once it has been released into the environment.

*Closed sytem*—A system, which by its design and proper operation, prevents release of a microbiological agent or eukaryotic cell contained therein.

*Containment*—The confinement of a microbiological agent or eukaryotic cell that is being cultured, stored, manipulated, transported or destroyed in order to prevent or limit its contact with people and/or the environment. Methods used to achieve this include: physical and biological barriers and inactivation using physical or chemical means.

*de minimis release*—A release of viable microbiological agents or eukaryotic cells that does not result in the establishment of disease in healthy people, plants or animals or in uncontrolled proliferation of any microbiological agents or eukaryotic cells.

*Disinfection*—A process by which viable microbiological agents or eukaryotic cells are reduced to a level unlikely to produce disease in healthy people, plants or animals.

*Good Large Scale Practice (GLSP) Organism*—For an organism to qualify for GLSP consideration, it must meet the following criteria: (Reference: Organization for Economic Cooperation and Development, Recombinant DNA Safety Considerations, 1987, pp. 34–35).

a. The host organism should be non-pathogenic, should not contain adventitious agents and should have an extended history of safe large-scale use or have built-in environmental limitations that permit optimum growth in the large-scale setting but limited survival without adverse consequences in the environment.

b. The recombinant DNA-engineered organism should be non-pathogenic, should be as safe in the large-scale setting as the host organism, and without adverse consequences in the environment.

c. The vector/insert should be well characterized and free from known harmful sequences; should be limited in size as much as possible to the DNA required to perform the intended function; should not increase the stability of the construct in the environment unless that is a requirement of the intended function; should be poorly mobilizable; and should not transfer any resistance markers to microorganisms not known to acquire them naturally if such acquisition could compromise the use of a drug to control disease agents in human or veterinary medicine or agriculture.

*Inactivation*—Any process that destroys the ability of a specific microbiological agent or eukaryotic cell to self-replicate.

*Incidental release*—The discharge of a microbiological agent or eukaryotic cell from a containment system that is expected when the system is appropriately designed and properly operated and maintained.

*Minimization*—The design and operation of containment systems in order that any incidental release is a *de minimis* release.

*Pathogen*—Any microbiological agent or eukaryotic cell containing sufficient genetic information, which upon expression of such information, is capable of producing disease in healthy people, plants or animals.

*Physcial barrier*—Equipment, facilities and devices (e.g., fermentors, factories, filters, thermal oxidizers) designed to achieve containment.

*Release*—The discharge of a microbiological agent or eukaryotic cell from a containment system. Discharges can be incidental or accidental. Incidental releases are *de minimis* in nature; accidental releases may be *de minimis* in nature.

I accept the recommended changes in appendix K and the *NIH Guidelines* are amended accordingly.

*B. Addition of Appendix D–XVII to the "NIH Guidelines" Regarding Human Gene Transfer Protocol/Dr. Brenner*

In a letter received on October 5, 1990, Dr. Malcolm K. Brenner of St. Jude Children's Research Hospital of Memphis, Tennessee, indicated his intention to submit a human gene transfer protocol to the Human Gene Therapy Subcommittee and the Recombinant DNA Advisory Committee for formal review and approval. The title of the protocol is:

"Autologous Bone Marrow Transplant for Children with Acute Myelogenous Leukemia (AML) in First Complete Remission: Use of Marker Genes to Investigate the Biology of Marrow Reconstitution and the Mechanism of Relapse."

This request was published for comment in the **Federal Register** on November 13, 1990 (55 FR 47399).

The protocol was reviewed by the Human Gene Therapy Subcommittee during its November 30, 1990, meeting. The subcommittee recommended provisional approval pending receipt of the following additional information. The consent form should include statements about patient confidentiality. There should be additional information in the consent form about long-term patient reevaluation. There should be more specific detail about the transduction protocol and more detail about the molecular identification of blast colonies. An assent form should be developed for use with patients over the age of seven.

The Human Gene Therapy Subcommittee forwarded the protocol to the Recombinant DNA Advisory Committee for consideration during its February 4, 1991, meeting.

This request was published for comment in the **Federal Register** on December 27, 1990 (55 FR 53258).

At the meeting of February 4, 1991, the Recombinant DNA Advisory Committee considered the recommendations of the Human Gene Therapy Subcommittee and confirmed that the requested revisions in the consent form were made, that the assent form was added, and that sufficient detail about methodology of the transduction procedure was provided. The RAC, by a vote of 16 in favor, none opposed, and no abstentions, approved the protocol.

I accept this recommendation and appendix D–XVII of the *NIH Guidelines* will be added accordingly.

*C. Addition of Appendix D–XVIII to the "NIH Guidelines" Regarding Human Gene Transfer Protocols/Dr. Brenner*

In a letter dated February 22, 1991, Dr. Malcolm K. Brenner of St. Jude Children's Research Hospital of Memphis, Tennessee, indicated his intention to submit two human gene transfer protocols to the Human Gene Therapy Subcommittee and the Recombinant DNA Advisory Committee for formal review and approval.

The first protocol is entitled: "A Phase I/II Trial of High-Dose Carboplatin and Etoposide with Autologous Marrow Support for Treatment of Stage D Neuroblastoma in First Remission: Use of Marker Genes to Investigate the Biology of Marrow Reconstitution and the Mechanism of Relapse."

The second protocol is entitled: "A Phase II Trial of High-Dose Carboplatin and Etoposide with Autologous Marrow Support for Treatment of Relapse/Refractory Neuroblastoma Without Apparent Bone Marrow Involvement: Use of Marker Genes to Investigate the Biology of Marrow Reconstitution and the Mechanism of Relapse."

These protocols were reviewed during the Human Gene Therapy Subcommittee meeting on November 30, 1990. The protocols were deferred with a request for additional data and further consideration at the next meeting on April 5, 1991.

This request was published for comment in the **Federal Register** on March 7, 1991 (56 FR 9707).

On April 5, 1991, the Human Gene Therapy Subcommittee gave provisional approval to both protocols with the stipulation that reviewers further evaluate Dr. Brenner's procedures for in vitro bone marrow assays to detect residual tumor. Second, a provision for early termination of the protocol needs to be developed if the relapse rate in the patient population exceeds the statistical predictions.

The Human Gene Therapy Subcommittee forwarded these

protocols to the Recombinant DNA Advisory Committee for consideration during the May 30–31, 1991, meeting.

This request was published for comment in the **Federal Register** on April 29, 1991 (56 FR 19776).

At the meeting of May 30–31, 1991, the Recombinant DNA Advisory Committee considered the recommendations of the Human Gene Therapy Subcommittee. Additional data was provided concerning the efficiency of transduction of bone marrow cells with the gene coding for neomycin resistance. There were several changes made in the informed consent document. It was suggested that the chemotherapy consent form be separated from the gene transfer consent form.

The RAC, by a vote of 19 in favor, none opposed, and no abstentions, approved the two protocols.

I accept this recommendation, and appendix D–XVIII of the NIH Guidelines will be added accordingly.

*D. Addition to Appendix D of the "NIH Guidelines" Regarding a Human Gene Transfer Protocol/Dr. Deisseroth*

In a letter dated December 20, 1990, Dr. Albert B. Deisseroth of the MD Anderson Cancer Center of Houston, Texas, indicated his intention to submit a human gene transfer protocol to the Human Gene Therapy Subcommittee and the Recombinant DNA Advisory Committee for former review and approval. The title of this protocol is:

"Autologous Transplantation for Chronic Myelogenous Leukemia: Retroviral Marking to Discriminate Between Relapses Arising from Residual Systemic Disease vs. Residual Contamination of Autologous Marrow."

This request was published for comment in the **Federal Register** on March 7, 1991 (56 FR 9707).

The protocol was considered during the April 5, 1991, Human Gene Therapy Subcommittee meeting. The Human Gene Therapy Subcommittee gave provisional approval with the stipulation that there be a major revision of the consent form including text for differentiating the gene transfer part of the research from the other part of the research. Additional data needs to be provided about the level of neomycin resistance gene expression and BCR–Abl gene expression in colonies of cells isolated during blast crisis.

The Human Gene Therapy Subcommittee forwarded this protocol to the Recombinant DNA Advisory Committee for consideration during the May 30–31, 1991 meeting.

This request was published for comment in the **Federal Register** on April 29, 1991 (56 FR 19776).

At the meeting of May 30–31, 1991, the Recombinant DNA Advisory Committee considered the recommendations of the Human Gene Therapy Subcommittee. Major changes were made in the consent form and there was a clear differentiation between the gene transfer portion of the protocol and the other clinical research studies. Additional data was presented regarding the efficiency of the gene transduction procedures, and the identification of colony-forming cells.

It was suggested that the investigator conduct one additional pre-clinical transduction experiment on a larger scale than previously shown. This would provide important data about the efficiency of the transduction procedures under conditions more nearly related to the actual study of patients.

The RAC, by a vote of 19 in favor, none opposed, and no abstentations, approved the protocol.

I accept this recommendation, and appendix XIX of the NIH Guidelines will be added accordingly.

*E. Addition of Appendix D–XX to the "NIH Guidelines" Regarding a Human Gene Transfer Protocol/Drs. Ledley and Woo*

In a letter dated December 19, 1990, Drs. Fred D. Ledley and Savio L.C. Woo of the Baylor College of Medicine of Houston, Texas, indicated their intention to submit a human gene transfer protocol to the Human Gene Therapy Subcommittee and the Recombinant DNA Advisory Committee for formal review and approval. The title of this protocol is:

"Hepatocellular Transplantation in Acute Hepatic Failure and Targeting Genetic Markers to Hepatic Cells."

This request was published for comment in the **Federal Register** on March 7, 1991 (56 FR 9707).

This protocol was considered during the April 51, 1991, Human Gene Therapy Subcommittee meeting. The Human Gene Therapy Subcommittee gave provisional approval with the stipulation that more data be provided about the transduction efficiency with the neomycin resistance gene in human hepatocytes. Additional changes were to be made in the consent form which would clarify the differences between the hepatocellular transplantation procedures and the use of the neomycin resistance gene as a marker.

The Human Gene Therapy Subcommittee forwarded this protocol to the Recombinant DNA Advisory Committee for consideration during the May 30–31, 1991, meeting.

The request was published for comment in the **Federal Register** on April 29, 1991 (56 FR 19776).

At the meeting of May 30–31, 1991, the RAC considered the recommendations of the Human Gene Therapy Subcommittee. In response to the Human Gene Therapy Subcommittee request for additional data concerning the transduction efficiency of the neomycin resistance gene, the investigators presented data from four different patients. The preclinical data demonstrates that the transduction efficiency is in the range of 0.1 percent to 1 percent. The requested changes were made in the consent form. During the course of discussion by the Recombinant DNA Advisory Committee, it became apparent that there are a number of fluorescent dye labeling techniques which are more efficient than genetically marking cells. One of these membrane dyes, DiI, has been used in baboon hepatocytes without untoward effects. DiI has been shown to be non-metabolized, non-diffusible, and stable *in vivo* for prolonged periods of time. Given this discussion about non-genetic marking of cells, the protocol was provisionally approved pending receipt of further information about the safety of this dye in human subjects.

The RAC, by a vote of 18 in favor, none opposed, and no abstentions, approved this protocol. Following the Recombinant DNA Advisory Committee meeting, the principal investigator contacted the manufacturer of DiI, Molecular Probes, Inc., and ascertained that there is no data on the use of this dye in humans. There is no plan to develop such a dye for human use. Thus, this approach for labeling human hepatocytes is not feasible at this time.

I accept this recommendation, and appendix D–XX of the *NIH Guidelines* will be added accordingly.

*F. Amend the "Points to Consider in the Design and Submission of Protocols for the Transfer of Recombinant DNA Into the Genome of Human Subjects"/Dr. McIvor*

In a letter dated March 4, 1991, Dr. R. Scott McIvor of the University of Minnesota proposed having more explicit directives for animal model systems and cell culture studies in Section I–B–2 of the *Points to Consider*.

Section I–B–2 in the *Points to Consider* currently reads:

"2. Preclinical studies, including risk-assessment studies.

"Describe the experimental basis (derived from tests in cultured cells and

animals) for claims about the efficacy and safety of the proposed system for gene delivery and explain why the model(s) chosen is (are) the most appropriate."

This request was published for comment in the **Federal Register** on March 7, 1991 (56 FR 9707) and amended on March 12, 1991 (56 FR 10441).

During the Human Gene Therapy Subcommittee meeting of April 5, 1991, the subcommittee recommended the following text change in the *Points to Consider:*

I-B-2. Preclinical studies, including risk assessment studies. Provide results that demonstrate the safety, efficacy, and feasibility of the proposed procedures using animal and/or cell culture model systems, and explain why the models chosen are the most appropriate.

The request was published for comment in the **Federal Register** on April 29, 1991 (56 FR 19776).

At the meeting of May 30-31, 1991, the Recombinant DNA Advisory Committee considered the amendment to the *Points to Consider.* After discussion, the RAC, by a vote of 17 in favor, 1 opposed, and no abstentions, approved the following text:

I-B-2. Preclinical studies, including risk assessment studies. Provide results that demonstrate the safety, efficacy, and feasibility of the proposed procedures using animal and/or cell culture model systems, and explain why the models chosen are appropriate for the protocol.

I accept this recommendation, and the Points to Consider will be amended accordingly.

## II. SUMMARY OF ACTIONS

### *A. Amendment of Appendix K of the "NIH Guidelines"*

The amendment of Appendix K reads as follows:

**Appendix K. Physical Containment for Large-Scale Uses of Organisms Containing Recombinant DNA Molecules**

This part of the Guidelines specifies physical containment guidelines for large-scale (greater than 10 liters of culture) research or production involving viable organisms containing recombinant DNA molecules. It shall apply to large-scale research or production activities as specified in section III-B-5 of the Guidelines. It is important to note that this appendix addresses only the biological hazard associated with organisms containing recombinant DNA. Other hazards accompanying the large scale cultivation of such organisms (e.g., toxic properties of products; physical, mechanical and chemical aspects of downstream processing) are not addressed and must be considered separately, albeit in conjunction with this appendix.

All provisions of the Guidelines shall apply to large-scale research or production activities with the following modifications:

- Appendix K shall replace appendix G when quantities in excess of 10 liters of culture are involved in research or production.
- The institutions shall appoint a Biological Safety Officer (BSO) if it engages in large-scale research or production activities involving viable organisms containing recombinant DNA molecules. The duties of the BSO shall include those specified in section IV-B-4 of the Guidelines.
- The institution shall establish and maintain a health surveillance program for personnel engaged in large-scale research or production activities involving viable organisms containing recombinant DNA molecules which require BL3 containment at the laboratory scale. The program shall include: Preassignment and periodic physical and medical examinations; collection, maintenance and analysis of serum species for monitoring serologic changes that may result from the employee's work experience; and provisions for the investigation of any serious, unusual or extended illnesses of employees to determine possible occupational origin.

*Appendix K-I. Selection of Physical Containment Levels*

The selection of the physical containment level required for recombinant DNA research or production involving more than 10 liters of culture is based on the containment guidelines established in part III of the Guidelines. For purposes of large-scale research or production, four physical containment levels are established. The four levels set containment conditions at those appropriate for the degree of hazard to health or the environment posed by the organism, judged by experience with similar organisms unmodified by recombinant DNA techniques and consistent with good large scale practices. These are referred to as GLSP, BL1-LS, BL2-LS, and BL3-LS. The GLSP (Good Large-Scale Practice) level of physical containment is recommended for large-scale research or production involving viable, non-pathogenic, and non-toxigenic recombinant strains derived from host organisms that have an extended history of safe large scale use. Likewise, the GLSP level of physical containment is recommended for organisms such as those included in Appendix C that have built-in environmental limitations that permit optimum growth in the large scale setting but limited survival without adverse consequences in the environment. For those organisms that do not qualify for GLSP, the BL1-LS (Biosafety Level 1-Large-Scale) level of physical containment is recommended for large-scale research or production of viable organisms containing recombinant DNA modecules that require BL1 containment at the laboratory scale. The BL2-LS (Biosafety Level 2-Large-Scale) level of physical containment is required for large-scale research or production of viable organisms containing recombinant DNA molecules that require BL2 containment at the laboratory scale. The BL3-LS (Biosafety Level 3-Large-Scale) level of physical containment is required for large-scale research or production of viable organisms containing recombinant DNA molecules that require BL3 containment at the laboratory scale. No provisions are made for large-scale research or production of viable organisms containing recombinant DNA molecules that require BL4 containment at the laboratory scale. If necessary, these requirements will be established by NIH on an individual basis.

*Appendix K-II. GLSP Level*

Appendix K-II-A. Institutional codes of practice shall be formulated and implemented to assure adequate control of health and safety matters.

Appendix K-II-B. Written instructions and training of personnel shall be provided to assure that cultures of viable organisms containing recombinant DNA molecules are handled prudently and that the workplace is kept clean and orderly.

Appendix K-II-C. In the interest of good personal hygiene, facilities (e.g., handwashing sink, shower, changing room) and protective clothing (e.g., uniforms, laboratory coats) shall be provided that are appropriate for the risk of exposure to viable organisms containing recombinant DNA molecules. In addition, eating, drinking, smoking, applying cosmetics and mouth pipetting shall be prohibited in the work area.

Appendix K-II-D. Cultures of viable organisms containing recombinant DNA molecules shall be handled in facilities intended to safeguard health during work with microorganisms that do not require containment.

Appendix K-II-E. Discharges containing viable recombinant organisms shall be handled in

accordance with applicable governmental environmental regulations.

Appendix K-II-F. Addition of materials to a system, sample collection, transfer of culture fluids within/between systems, and processing of culture fluids shall be conducted in a manner that maintains employee exposure to viable organisms containing recombinant DNA molecules at a level that does not adversely affect the health and safety of employees.

Appendix K-II-G. The facility's emergency response plan shall include provisions for handling spills.

*Appendix K-III. BL1-LS Level*

Appendix K-III-A. Spills and accidents which result in overt exposures to organisms containing recombinant DNA molecules are immediately reported to the laboratory director. Medical evaluation, surveillance, and treatment are provided as appropriate and written records are maintained.

Appendix K-III-B. Cultures of viable organisms containing recombinant DNA molecules shall be handled in a closed system (e.g., closed vessel used for the propagation and growth of cultures) or other primary containment equipment (e.g., biological safety cabinet containing a centrifuge used to process culture fluids) which is designed to reduce the potential for escape of viable organisms. Volumes less than 10 liters may be handled outside of a closed system or other primary containment equipment provided all physical containment requirements specified in Appendix G-II-A of the *Guidelines* are met.

Appendix K-III-C. Culture fluids (except as allowed in Appendix K-III-D) shall not be removed from a closed system or other primary containment equipment unless the viable organisms containing recombinant DNA molecules have been inactivated by a validated inactivation procedure. A validated inactivation procedure is one which has been demonstrated to be effective using the organism that will serve as the host for propagating the recombinant DNA molecules.

Appendix K-III-D. Sample collection from a closed system, the addition of materials to a closed system, and the transfer of culture fluids from one closed system to another shall be done in a manner which minimizes the release of aerosols or contamination of exposed surfaces.

Appendix K-III-E. Exhaust gases removed from a closed system or other primary containment equipment shall be treated by filters which have efficiencies equivalent to HEPA filters or by other equivalent procedures (e.g., incineration) to minimize the release of viable organisms containing recombinant DNA molecules to the environment.

Appendix K-III-F. A closed system or other primary containment equipment that has contained viable organisms containing recombinant DNA molecules shall not be opened for maintenance or other purposes unless it has been sterilized by a validated sterilization procedure. A validated sterilization procedure is one which has been demonstrated to be effective using the organism that will serve as the host for propagating the recombinant DNA molecules.

Appendix K-III-G. Emergency plans required by Section IV-B-3-f shall include methods and procedures for handling large losses of culture on an emergency basis.

*Appendix K-IV. BL2-LS Level*

Appendix K-IV-A. Cultures of viable organisms containing recombinant DNA molecules shall be handled in a closed system (e.g., closed vessel used for the propagation and growth of cultures) or other primary containment equipment (e.g., Class III biological safety cabinet containing a centrifuge used to process culture fluids) which is designed to prevent the escape of viable organisms.

Volumes less than 10 liters may be handled outside of a closed system or other primary containment equipment provided all physical containment requirements specified in Appendix G-II-B of the Guidelines are met.

Appendix K-IV-B. Culture fluids (except as allowed in Appendix K-IV-C) shall not be removed from a closed system or other primary containment equipment unless the viable organisms containing recombinant DNA molecules have been inactivated by a validated inactivation procedure. A validated inactivation procedure is one which has been demonstrated to be effective using the organism that will serve as the host for propagating the recombinant DNA molecules.

Appendix K-IV-C. Sample collection from a closed system, the addition of materials to a closed system, and the transfer of cultures fluids from one closed system to another shall be done in a manner which prevents the release of aerosols or contamination of exposed surfaces.

Appendix K-IV-D. Exhaust gases removed from a closed system or other primary containment equipment shall be treated by filters which have efficiencies equivalent to HEPA filters or by other equivalent procedures (e.g., incineration) to prevent the release of viable organisms containing recombinant DNA molecules to the environment.

Appendix K-IV-E. A closed system or other primary containment equipment that has contained viable organisms containing recombinant DNA molecules shall not be opened for maintenance or other purposes unless it has been sterilized by a validated sterilization procedure. A validated sterilization procedure is one which has been demonstrated to be effective using the organisms that will serve as the host for propagating the recombinant DNA molecules.

Appendix K-IV-F. Rotating seals and other mechanical devices directly associated with a closed system used for the propagation and growth of viable organisms containing recombinant DNA molecules shall be designed to prevent leakage or shall be fully enclosed in ventilated housings that are exhausted through filters which have efficiencies equivalent to HEPA filters or through other equivalent treatment devices.

Appendix K-IV-G. A closed system used for the propagation and growth of viable organisms containing recombinant DNA molecules and other primary containment equipment used to contain operations involving viable organisms containing sensing devices that monitor the integrity of containment during operations.

Appendix K-IV-H. A closed system used for the propagation and growth of viable organisms containing the recombinant DNA molecules shall be tested for integrity of the containment features using the organism that will serve as the host for propagating recombinant DNA molecules. Testing shall be accomplished prior to the introduction of viable organisms containing recombinant DNA molecules and following modification or replacement of essential containment features. Procedures and methods used in the testing shall be appropriate for the equipment design and for recovery and demonstration of the test organism. Records of tests and results shall be maintained on file.

Appendix K-IV-I. A closed system used for the propagation and growth of viable organisms containing recombinant DNA molecules shall be permanently identified. This identification shall be used in all records reflecting testing, operation, and maintenance and in all documentation relating to use of this equipment for research or production activities involving viable organisms containing recombinant DNA molecules.

Appendix K-IV-J. The universal biohazard sign shall be posted on each

closed system and primary containment equipment when used to contain viable organisms containing recombinant DNA molecules.

Appendix K-IV-K. Emergency plans required by Section IV-B-3-f shall include methods and procedures for handling large losses of culture on an emergency basis.

*Appendix K-V BL3-LS Level*

Appendix K-V-A. Cultures of viable organisms containing recombinant DNA molecules shall be handled in a closed system (e.g., closed vessels used for the propagation and growth of cultures) or other primary containment equipment (e.g., Class III biological safety cabinet containing a centrifuge used to process culture fluids) which is designed to prevent the escape of viable organisms. Volumes less than 10 liters may be handled outside of a closed system provided all physical containment requirements specified in appendix G-II-C of the Guidelines are met.

Appendix K-V-B. Culture fluids (except as allowed in appendix K-V-C) shall not be removed from a closed system or other primary containment equipment unless the viable organisms containing recombinant DNA molecules have been inactivated by a validated inactivation procedure. A validated inactivation procedure is one which has been demonstrated to be effective using the organisms that will serve as the host for propagating the recombinant DNA molecules.

Appendix K-V-C. Sample collection from a closed system, the addition of materials to a closed system, and the transfer of culture fluids from one closed system to another shall be done in a manner which prevents the release of aerosols or contamination of exposed surfaces.

Appendix K-V-D. Exhaust gases removed from a closed system or other primary containment equipment shall be treated by filters which have efficiencies equivalent to HEPA filters or by other equivalent procedures (e.g., incineration) to prevent the release of viable organisms containing recombinant DNA molecules to the environment.

Appendix K-V-E. A closed system or other primary containment equipment that has contained viable organisms containing recombinant DNA molecules shall not be opened for maintenance or other purposes unless it has been sterilized by a validated sterilization procedure. A validated sterilization procedure is one which has been demonstrated to be effective using the organisms that will serve as the host for propagating the recombinant DNA molecules.

Appendix K-V-F. A closed system used for the propagation and growth of viable organisms containing recombinant DNA molecules shall be operated so that the space above the culture level will be maintained at a pressure as low as possible, consistent with equipment design, in order to maintain the integrity of containment features.

Appendix K-V-G. Rotating seals and other mechanical devices directly associated with a closed system used to contain viable organisms containing recombinant DNA molecules shall be designed to prevent leakage or shall be fully enclosed in ventilated housings that are exhausted through filters which have efficiencies equivalent to HEPA filters or through other equivalent treatment devices.

Appendix K-V-H. A closed system used for the propagation and growth of viable organisms containing recombinant DNA molecules and other primary containment equipment used to contain operations involving viable organisms containing recombinant DNA molecules shall include monitoring or sensing devices that moniter the integrity of containment during operations.

Appendix K-V-I. A closed system used for the propagation and growth of viable organisms containing recombinant DNA molecules shall be tested for integrity of the containment features using the organisms that will serve as the host for propagating the recombinant DNA molecules. Testing shall be accomplished prior to the introduction of viable organisms containing recombinant DNA molecules and following modification or replacement of essential containment features. Procedures and methods used in the testing shall be appropriate for the equipment design and for recovery and demonstration of the test organism. Records of tests and results shall be maintained on file.

Appendix K-V-J. A closed system used for the propagation and growth of viable organisms containing recombinant DNA molecules shall be permanently identified. This identification shall be used in all records reflecting testing, operation, and maintenance and in all documentation relating to the use of this equipment for research production activities involving viable organisms containing recombinant DNA molecules.

Appendix K-V-K. The universal biohazard sign shall be posted on each closed system and primary containment equipment when used to contain viable organisms containing recombinant DNA molecules.

Appendix K-V-L. Emergency plans required by section IV-B-3-f shall include methods and procedures for handling large losses of culture on an emergency basis.

Appendix K-V-M. Closed systems and other primary containment equipment used in handling cultures of viable organisms containing recombinant DNA molecules shall be located within a controlled area which meets the following requirements:

Appendix K-V-M-1. The controlled area shall have a separate entry area. The entry area shall be a double-doored space such as an air lock, anteroom, or change room that separates the controlled area from the balance of the facility.

Appendix K-V-M-2. The surfaces of walls, ceilings, and floors in the controlled area shall be such as to permit ready cleaning and decontamination.

Appendix K-V-M-3. Penetrations into the controlled area shall be sealed to permit liquid or vapor phase space decontamination.

Appendix K-V-M-4. All utilities and service or process piping and wiring entering the controlled area shall be protected against contamination.

Appendix K-V-M-5. Hand-washing facilities equipped with foot, elbow, or automatically operated valves shall be located at each major work area and near each primary exit.

Appendix K-V-M-6. A shower facility shall be provided. This facility shall be located in close proximity to the controlled area.

Appendix K-V-M-7. The controlled area shall be designed to preclude release of culture fluids outside the controlled area in the event of an accidental spill or release from the closed systems or other primary containment equipment.

Appendix K-V-M-8. The controlled area shall have a ventilation system that is capable of controlling air movement. The movement of air shall be from areas of lower contamination potential to areas of higher contamination potential. If the ventilation system provides positive pressure supply air, the system shall operate in a manner that prevents the reversal of the direction of air movement or shall be equipped with an alarm that would be actuated in the event that reversal in the direction of air movement were to occur. The exhaust air from the controlled area shall not be recirculated to other areas of the facility. The exhaust air from the controlled area may not be discharged to the outdoors without being HEPA filtered, subjected to thermal oxidation,

or otherwise treated to prevent the release of viable organisms.

Appendix K-V-N. The following personnel and operational practices shall be required:

Appendix K-V-N-1. Personnel entry into the controlled area shall be through the entry area specified in Appendix K-V-M-1.

Appendix K-V-N-2. Persons entering the controlled area shall exchange or cover their personal clothing with work garments such as jumpsuits, laboratory coats, pants and shirts, head cover, and shoes or shoe covers. On exit from the controlled area the work clothing may be stored in a locker separate from that used for personal clothing or discarded for laundering. Clothing shall be decontaminated before laundering.

Appendix K-V-N-3. Entry into the controlled area during periods when work is in progress shall be restricted to those persons required to meet program or support needs. Prior to entry all persons shall be informed of the operating practices, emergency procedures and the nature of the work conducted.

Appendix K-V-N-4. Persons under 18 years of age shall not be permitted to enter the controlled area.

Appendix K-V-N-5. The universal biohazard sign shall be posted on entry doors to the controlled area and all internal doors when any work involving the organism is in progress. This includes periods when decontamination procedures are in progress. The sign posted on the entry doors to the controlled area shall include a statement of agents in use and personnel authorized to enter the controlled area.

Appendix K-V-N-6. The controlled area shall be kept neat and clean.

Appendix K-V-N-7. Eating, drinking, smoking, and storage of food are prohibited in the controlled area.

Appendix K-V-N-8. Animals and plants shall be excluded from the controlled area.

Appendix K-V-N-9. An effective insect and rodent control program shall be maintained.

Appendix K-V-N-10. Access doors to the controlled area shall be kept closed, except as necessary for access, while work is in progress. Serve doors leading directly outdoors shall be sealed and locked while work is in progress.

Appendix K-V-N-11. Persons shall wash their hands when leaving the controlled area.

Appendix K-V-N-12. Persons working in the controlled area shall be trained in emergency procedures.

Appendix K-V-N-13. Equipment and materials required for the management of accidents involving viable organisms containing recombinant DNA molecules shall be available in the controlled area.

Appendix K-V-N-14. The controlled area shall be decontaminated in accordance with established procedures following spills or other accidental release of viable organisms containing recombinant DNA molecules.

APPENDIX K.—COMPARISON OF GLSP AND BL-LS PRACTICES [1]

| Criterion [2] | GLSP | BL1-LS | BL2-LS | BL3-LS |
|---|---|---|---|---|
| 1. Formulate and implement institutional codes of practice for safety of personnel and adequate control of hygiene and safety measures. G-1 | K-II-A | G-I | | |
| 2. Provide adequate written instructions and training of personnel to keep workplace clean and tidy and to keep exposure to biological, chemical or physical agents at a level that does not adversely affect health and safety of employees. G-II¶ 1 | K-II-B | G-II¶ 1 | | |
| 3. Provide changing and handwashing facilities as well as protective clothing, appropriate to the risk, to be worn during work. | K-II-C | G-II-A-1-h | G-II-B-2-f | G-II-C-2-i. |
| 4. Prohibit eating, drinking, smoking, mouth pipetting, and applying cosmetics in the workplace. | K-II-C | G-II-A-1-d, G-II-A-1-e | G-II-B-1-d, G-II-B-1-e | G-II-C-1-c, G-II-C-1-d. |
| 5. Internal accident reporting | K-II-D | K-III-A | G-II-B-2-k and G-II-B-2-l. | G-II-C-2-q and G-II-C-2-r. |
| 6. Medical surveillance | NR | NR | do | Do. |
| 7. Viable organisms should be handled in a system that physically separates the process from the external environment (closed system or other primary containment). | NR | K-III-B | K-IV-A | K-V-A. |
| 8. Culture fluids not removed from a system until organisms inactivated | NR | K-III-C | K-IV-B | K-V-B. |
| 9. Inactivation of waste solutions and materials with respect to their biohazard potential. | K-II-E | K-III-C | K-IV-B | K-V-B. |
| 10. Control of aerosols by engineering or procedural controls to prevent or minimize release of organisms during sampling from a system, addition of materials to a system, transfer of cultivated cells, and removal of material, products, and effluents from a system. | Minimize Procedure K-II-F. | Minimize Engineer K-III-D. | Prevent Engineer K-IV-C. | Prevent Engineer K-V-C. |
| 11. Treatment of exhaust gasses from a closed system to minimize or prevent release of viable organisms. | NR | Minimize K-III-E | Prevent K-IV-D | Prevent K-V-D. |
| 12. Closed system that has contained viable organisms not to be opened until sterilized by a validated procedure. | NR | K-III-F | K-IV-E | K-V-E. |
| 13. Closed system to be maintained at as a low pressure as possible to maintain integrity by containment features. | NR | NR | NR | K-V-F. |
| 14. Rotating seals and other penetrations into closed system designed to prevent or minimize leakage. | NR | NR | Prevent K-IV-F | Prevent K-V-G. |
| 15. Closed system shall incorporate monitoring or sensing devices to monitor the integrity of containment. | NR | NR | K-IV-G | K-V-H. |
| 16. Validated integrity testing of closed containment system | NR | NR | K-IV-H | K-V-I. |
| 17. Closed system to be permanently identified for record keeping purposes | NR | NR | K-IV-I | K-V-J. |
| 18. Universal biohazard sign to be posted on each closed system | NR | NR | K-IV-J | K-V-K. |
| 19. Emergency plans required for handling large losses of cultures | K-II-G | K-III-G | K-IV-K | K-V-L. |
| 20. Access to the workplace | NR | G-II-A-1-a | G-II-B-1-a | K-V-M. |
| 21. Requirements for controlled access area | NR | NR | NR | K-V-M&N. |

NR = not required.

*Appendix K. Footnotes*

1. This table is derived from the text in Appendices G and K and is not to be used in lieu of Appendices G and K.

2. The criteria in this grid address only the biological hazard associated with organisms containing recombinant DNA. Other hazards accompanying the large scale cultivation of such organisms (e.g., toxic properties of products; physical, mechanical and chemical aspects of downstream processing) are not addressed and must be considered separately, albeit in conjunction with this grid.

*Appendix K. Definitions to Accompany Containment Grid and Proposed Modification of Appendix K*

*Accidental release*—The unintentional discharge of a microbiological agent (i.e., microorganism or virus) or eukaryotic cell due to a failure in the containment system.

*Biological barrier*—An impediment (naturally occurring or introduced) to the infectivity and/or survival of a microbiological agent or eukaryotic cell once it has been released into the environment.

*Closed system*—A system, which by its design and proper operation, prevents release of a microbiological agent or eukaryotic cell contained therein.

*Containment*—The confinement of a microbiological agent or eukaryotic cell that is being cultured, stored, manipulated, transported or destroyed in order to prevent or limit its contact with people and/or the environment. Methods used to achieve this include: physical and biological barriers and inactivation using physical or chemical means.

*de minimis release*—A release of viable microbiological agents or eukaryotic cells that do not result in the establishment of disease in healthy people, plants or animals or in uncontrolled proliferation of any microbiological agents or eukaryotic cells.

*Disinfection*—A process by which viable microbiological agents or eukaryotic cells are reduced to a level unlikely to produce disease in healthy people, plants or animals.

*Good Large Scale Practice (GLSP) Organism*—For an organism to qualify for GLSP consideration, it must meet the following criteria: (Reference: Organization for Economic Cooperation and Development, Recombinant DNA Safety Considerations, 1987, p. 34–35).

a. The host organism should be non-pathogenic, should not contain adventitious agents and should have an extended history of safe large-scale use or have built-in environmental limitations that permit optimum growth in the large-scale setting but limited survival without adverse consequences in the environment.

b. The recombinant DNA-engineered organism should be non-pathogenic, should be as safe in the large-scale setting as the host organism, and without adverse consequences in the environment.

c. The vector/insert should be well characterized and free from known harmful sequences; should be limited in size as much as possible to the DNA required to perform the intended function; should not increase the stability of the construct in the environment unless that is a requirement of the intended function; should be poorly mobilizable; and should not transfer any resistance markers to microorganisms not known to acquire them naturally if such acquisition could compromise the use of a drug to control disease agents in human or veterinary medicine or agriculture.

*Inactivation*—Any process that destroys the ability of a specific microbiological agent or eukaryotic cell to self-replicate.

*Incidental release*—The discharge of a microbiological agent or eukaryotic cell from a containment system that is expected when the system is appropriately designed and properly operated and maintained.

*Minimization*—The design and operation of containment systems in order that any incidental release is a *de minimis* release.

*Pathogen*—Any microbiological agent or eukaryotic cell containing sufficient genetic information, which upon expression of such information is capable of producing disease in healthy people, plants or animals.

*Physical barrier*—Equipment, facilities and devices (e.g., fermentors, factories, filters, thermal oxidizers) designed to achieve containment.

*Release*—The discharge of a microbiological agent or eukaryotic cell from a containment system. Discharges can be incidental or accidental. Incidental releases are *de minimis* in nature; accidental releases may be *de minimis* in nature.

*B. Addition of Appendix D–XVII to the "NIH Guidelines"*

The following section is added to Appendix D:

*Appendix D–XVII*

Dr. Malcolm K. Brenner of St. Jude, Children's Research Hospital of Memphis, Tennessee, can conduct experiments on patients with acute myelogenous leukemia (AML). Using the LNL6 retroviral vector, the autologous bone marrow cells will be transduced with the gene coding for neomycin resistance. The purpose of this gene marking experiment is to determine whether the source of relapse after autologous bone marrow transplantation for acute myelogenous leukemia is residual malignant cells in the harvested marrow or reoccurrence of tumor in the patient. Determining the source of relapse should indicate whether or not purging of the bone marrow is a necessary procedure.

*C. Addition of Appendix D–XVIII to the "NIH Guidelines"*

The following section is added to Appendix D.

*Appendix D–XVIII*

Dr. Malcom K. Brenner of St. Jude Children's Research Hospital of Memphis, Tennessee, can conduct experiments on pediatric patients with Stage D (disseminated) neuroblastoma who are being treated with high-dose carboplatin and etoposide in either phase I/II or phase II trials. All the patients in these studies will be subjected to bone marrow transplantation since it will allow them to be exposed to chemoradiation that would be lethal were it not for the availability of stored autologous marrow for rescue.

The bone marrow cells of these patients will be transduced with the gene coding for neomycin resistance using the LNL6 vector. The purpose of this gene marking study is to determine whether the source of relapse after autologous bone marrow transplantation is residual malignant cells in the harvested marrow or residual disease in the patient. Secondly, it is hoped to determine the contribution of marrow autographs to autologous reconstitution.

*D. Addition of Appendix D–XIX to the "NIH Guidelines"*

The following section is added to Appendix D:

*Appendix D–XIX*

Dr. Albert B. Deisseroth of the MD Anderson Cancer Center of Houston, Texas, can conduct experiments on patients with chronic myelogenous leukemia who have been reinduced into a second chronic phase or cytogenetic remission after accelerated phase or blast crisis. The patients in these studies will receive autologous bone marrow transplantation. Using the LNL6 vector, the bone marrow cells will be transduced with the gene coding for

neomycin resistance. The purpose of these gene marking studies is to determine if the origin of relapse arises from residual leukemic cells in the patients or from viable leukemic cells remaining in the bone marrow used for autologous transplantation.

*E. Addition of Appendix D–XX to the "NIH Guidelines"*

The following is added to Appendix D:

*Appendix D–XX*

Drs. Fred D. Ledley and Savio L. C. Woo of Baylor College of Medicine of Houston, Texas, can conduct experiments on pediatric patients with acute hepatic failure who are identified as candidates for hepatocellular transplantation. Using the LNL6 vector, the hepatocytes will be transduced with the gene coding for neomycin resistance. The purpose of using a genetic marker is to demonstrate the pattern of engraftment of transplanted hepatocytes and to help determine the success or failure of engraftment.

*F. Amend the "Points to Consider in the Design and Submission of Protocols for the Transfer of Recombinant DNA Into the Genome of Human Subjects"*

Section I–B–2 will read as follows:

I–B–2. Preclinical studies, including risk assessment studies. Provide results that demonstrate the safety, efficacy, and feasibility of the proposed procedures using animal and/or cell culture model systems, and explain why the models chosen are appropriate for the protocol.

**III. Correction to the Notice of Actions Published in the Federal Register on September 12, 1990 (55 FR 37565)**

In the Summary of Actions under *B. Addition of Appendix D–XV to NIH Guidelines* the retroviral vector used for transducing the gene coding for adenosine deaminase (ADA) is listed as "LNL6". The retroviral vector that was used was "LASN".

OMB's Mandatory Information Requirements for Federal Assistance Program Announcements" (45 FR 39592) requires a statement concerning the official government programs contained in the *Catalog of Federal Domestic Assistance.* Normally NIH lists in its announcements the number and title of affected individual programs for the guidance of the public. Because the guidance in this notice covers not only virtually every NIH program but also essentially every Federal research program in which DNA recombinant molecule techniques could be use, it has been determined to be not cost effective or in the pubic interest to attempt to list these programs. Such a list would likely require several additional pages. In addition, NIH could not be certain that every Federal program would be included as many Federal agencies, as well as private organizations, both national and international, have elected to follow the *NIH Guidelines.* In lieu of the individual program listing, NIH invites readers to direct questions to the information address above about whether individuals programs listed in the *Catalog of Federal Domestic Assistance* are affected.

Dated: July 12, 1991.

**Bernadine Healy,**

*Director, National Institutes of Health.*

[FR Doc. 91–17125 Filed 7–17–91; 8:45 am]

BILLING CODE 4140–01–M

federal register

Thursday
July 18, 1991

# Part VIII

# Environmental Protection Agency

## Interagency Policy on Beneficial Use of Municipal Sewage Sludge on Federal Land; Notice

## ENVIRONMENTAL PROTECTION AGENCY

[WH-FRL-3970-8]

## Interagency Policy on Beneficial Use of Municipal Sewage Sludge on Federal Land [1]

**AGENCY:** Environmental Protection Agency.

**ACTION:** Notice of interagency policy on beneficial use of municipal sewage sludge on Federal land.

**SUMMARY:** The Office of Management and Budget (OMB) convened an Interagency Task Force in 1990 to develop a consistent policy regarding the beneficial use of municipal sewage sludge and to resolve any technical concerns over the scientific information available in this area. The policy announced today by EPA, on behalf of all the participating agencies, is a product of that Interagency Task Force effort. It is intended to clarify for the public the Federal government's policy and will guide the Federal land management agencies with respect to the beneficial use of municipal sewage sludge on Federal land. The statement reaffirms and supplements the existing Federal policy to advocate those municipal sludge management practices that provide for the beneficial use of sludges while maintaining environmental quality and protecting public health.

Dated: July 10, 1991.

William K. Reilly,

*Administrator.*

**FOR FURTHER INFORMATION CONTACT:**

U.S. Department of Agriculture: Mr. Larry Schmidt, Forest Service, Watershed and Air, 201 14th Street, SW., Auditors Room 3 So., Washington, DC 20250 (202) 453-9475.

U.S. Department of Defense: Mr. Ed Miller, Environmental Support Office, 206 N. Washington Street, Suite 100, Alexandria, VA 22314 (703) 325-2215.

U.S. Department of Energy: Mr. Jerry Coalgate, RCRA/CERCLA Division, Office of Environmental Guidance, GA-076 (Mailstop EH-23), 1000 Independence Avenue, SW., Washington, DC 20585 (202) 586-6075.

U.S. Department of the Interior: Mr. Larry Finfer, Mailstop 4412, Office of Program Analysis, 1849 C Street, NW., Washington, DC 20240 (202) 208-7786.

U.S. Environmental Protection Agency: Mr. Robert K. Bastian, Office of Wastewater Enforcement & Compliance (WH-547), 401 M Street, SW., Washington, DC 20460 (202) 382-7378.

U.S. Food and Drug Administration: Mr. Thomas Fazio, Office of Physical Sciences (HFF-400), 200 C Street, SW., Washington, DC 20204 (202) 472-5182.

Tennessee Valley Authority: Mr. Paul Giordano, F-137 NFERC, Muscle Shoals, AL 35660 (205) 386-3490.

### Statement of Policy

*Interagency Policy on Beneficial Use of Municipal Sewage Sludge on Federal Land*

I. Purpose and Need

The Federal government seeks to promote the cost-effective use of recycled materials in American society. One such material, municipal sewage sludge, has been used extensively as a fertilizer and soil conditioner in this nation and elsewhere over a number of years. Municipal sewage sludge is any residue removed during the treatment of municipal wastewater and domestic sewage. Recently, there has been some uncertainty about the policy of the Federal government toward the beneficial use of municipal sewage sludge. This statement is intended to clarify for the public the Federal government's policy. It also provides guidance to Federal land management agencies, with respect to the beneficial use of municipal sewage sludge on Federal lands. These agencies may choose to elaborate on this policy by developing and publishing additional agency-specific guidance.

This statement relates solely to the beneficial use of municipal sewage sludge on land. "Beneficial use" means any application of sludge to land specifically designed to take advantage of the nutrient and other characteristics of this material to improve soil fertility or structure and thereby further some natural resource management objective. Disposal of sludge, which is characterized by an emphasis on isolating, incinerating, or otherwise placing sludge without an associated natural resource management objective, is treated elsewhere in applicable law and regulation. Sludge treatment practices in advance of final use are also not considered to be beneficial uses.

This statement was developed by an interagency task force, facilitated by the Office of Management and Budget, and comprised of representatives of the Departments of Agriculture, Defense, Energy, and Interior, as well as the Environmental Protection Agency, Food and Drug Administration, and the Tennessee Valley Authority. These agencies concur in this document, and will seek to implement it as is appropriate in their respective cases.

II. Beneficial Use Policy

It is the policy of the Federal government that Federal land management agencies will consider beneficial use of municipal sewage sludge for fertilizer, soil conditioner, or other uses, when such uses enhance resources on the Federal lands, and are cost-effective, as determined by the appropriate Federal land management agency.

Where the agency determines that a proposal to apply sludge to Federal lands constitutes a beneficial use that is consistent with the agency's resource management objectives, it is expected that the agency can take advantage of the proposal to beneficially use municipal sewage sludge, unless the agency's analysis reveals (1) legal or programmatic obstacles, (2) evidence indicating significant adverse environmental effects, or (3) excessive agency costs relative to the natural resource benefits and the applicant's opportunity cost.

III. Relationship to Existing Policy

This statement of policy reaffirms and supplements existing Federal policy with regard to sewage sludge (i.e.: "Land Application of Municipal Sewage Sludge for the Production of Fruits and Vegetables, a Statement of Federal Policy and Guidance", adopted by the Environmental Protection Agency, Food and Drug Administration, and the Department of Agriculture, 1981; and "Policy on Municipal Sludge Management", adopted by the Environmental Protection Agency on June 12, 1984, 49 FR 24358).

This statement is not intended to conflict with any statutory or regulatory requirement which guides the programs of the agencies concurring in this document.

IV. Findings Regarding the Beneficial Use of Sewage Sludge

Several decades of experience with municipal sewage sludge has demonstrated that this material can be a valuable resource. Recycling it through beneficial use projects can serve natural resource management and other societal objectives.

The weight of scientific evidence supports the presumption that beneficial use of sludge that is permitted by EPA or the States and is of such quality to ensure compliance with the permit does not present a significant risk to the environment when appropriately

[1] This is a corrected reprinting of the document that appeared in the Federal Register issue of July 2, 1991 (56 FR 30448).

applied to land. However, given the wide variety of physiographic and biological conditions in the United States, the final determination as to the environmental effects of a specific project must take into consideration the particular characteristics of the sludge, the resources, and the land to which it is proposed to be applied.

1. *Human Health and Safety.* There is no existing scientific evidence of significant human health risk from municipal sewage sludge that is produced and applied to land in compliance with applicable sludge permits and regulations.

2. *Biological considerations.* Municipal sewage sludge that meets all applicable state and federal standards, which is applied consistent with permit conditions, and which is applied to land in amounts intended to meet the soil fertility requirements of vegetation, can generally be presumed to be safe for biota. However, the Federal land manager who is considering beneficial use of municipal sewage sludge may wish to investigate the specific characteristics of both the sludge and the site to which it may be applied. There is always the possibility that unique local conditions or sludge characteristics may make sludge application more or less appropriate than would otherwise be the case.

An extensive literature review has not revealed any scientific evidence suggesting that beneficial use of sewage sludge has been demonstrated to cause harmful physical, physiological, or behavioral effects on animals and plants when sludge is applied to land in compliance with applicable permits and regulations. Under some conditions, certain species of plants and animals have been found to concentrate metals or organic chemicals present in sludge within certain of their tissues. This has typically happened when sludge application rates were high and the sludge was relatively highly contaminated. However, contaminants found in the tissues of those plants and animals exposed to sewage sludge have not been demonstrated to have had any harmful effect on those organisms, and the tissue contaminant levels found in those organisms are generally within the range of values that can be found in members of those species inhabiting areas without sludge-amended soils.

Organisms relatively low on the food chain have been the subject of most of the relevant investigations. More scientific information is needed with respect to bioaccumulation of contaminants found in sewage sludge by predators in various ecosystems. Better information on sewage sludge contaminants in predators will be particularly helpful when management of such species is receiving emphasis in applicable land use or resource management plans.

3. *Ecological considerations.* Beneficial use is intended to improve soil conditions. At the ecological level these changes are likely to be expressed in increased overall productivity, and may be reflected in potentially significant changes in the structure, diversity, or richness of the pre-existing plant and animal community. The nature and rate of these changes may be affected not only by the physical and chemical nature of the sludge, but also by the method of application. Since certain common methods of application could create significant adverse impacts on ecosystems, managers are advised to consult with appropriate technical experts to gain a better understanding of the implications of these considerations.

Certain species can be expected to be relatively advantaged or disadvantaged by the higher levels of soil macro and micro-nutrients and organic material resulting from sewage sludge application. They will out-compete, or be out-competed by, species better adapted to the new conditions.

Whether these changes are positive or adverse can only be evaluated in a programmatic context. If the land management objective is to re-vegetate a heavily mined or otherwise disturbed area, improve forage for livestock or wildlife, reseed after a floral pest removal, or accomplish some similar objective, then the changes are more likely to be considered positive. On the other hand, if the land management objective is to maintain the ecological *status quo,* or to enhance a population of a species that would be disadvantaged by sludge application, then the land manager may choose to reject the beneficial use proposal as not being consistent with the land management objectives.

4. *Water Quality Considerations.* Federal land and facility managers are responsible for controlling non-point source pollution that may arise from land disturbing activities or the use of materials such as fertilizer on Federal land.

Federal sludge regulations protect water quality under a wide range of conditions of sludge application. Applying properly treated sewage sludge to well vegetated sites and where tillage is a standard practice further minimizes the potential for adverse water quality impacts of such applications. Where such conditions or tillage practices are not typically the case, land managers should consider possible short term adverse water quality effects. For example, sludge application on undisturbed arid and semi-arid lands may need further research or pilot studies regarding suitable measures or practices to control possible contamination from flash floods and other high intensity storm events.

5. *Risk Assessment and Innovation.* Beneficial use of municipal sewage sludge has not previously been a common practice of Federal land management agencies. When it has occurred, it has typically been on the initiative of local managers. Adopting non-traditional practices always poses risks to some degree. However, failing to adopt a new practice may also pose risks if it precludes an opportunity to make progress toward fulfilling the agency's land management objectives. Consequently, the risk of foregoing possible land management benefits which may result from innovative land management practices, needs to be weighed against the risks associated with such practices.

## V. Agency Implementation Guidance

Federal actions that involve the beneficial use of municipal sewage sludge on Federal lands must comply with National Environmental Policy Act (NEPA) review. Federal agencies will follow their own NEPA guidelines.

The following five factors illustrate the preferred analytical approach for Federal land management agencies to use in evaluating beneficial use proposals. This is not a prescribed process, but guidelines which agencies should seek to satisfy in substance. Each agency will use its own applicable internal procedures for evaluating beneficial use proposals; these procedures are expected to vary among agencies.

In evaluating beneficial use proposals, the Federal land management agency needs to:

—Determine whether adoption of the proposal would comply with applicable law and regulation, would be consistent with the agency's long-term land management objectives, and conforms to the agency's approved land management plans for the specific lands identified in the proposal.

—Determine whether the proposal's predicted effects, assuming it is successfully implemented as proposed, will actually promote the agency's resource management objectives (e.g.: silviculture, forage enhancement, and land reclamation).

—Assess the proposal based on existing credible scientific information. In the

absence of sufficient scientific information to make a reasonable decision, the agency will consider a pilot project designed to produce the necessary information to make an informed decision.

—Determine whether the anticipated costs to the agency of implementing the proposal appear justifiable when compared to the anticipated natural resource management benefits that would result from the adoption of the proposal. In evaluating a beneficial use proposal, Federal land managers should consider any information provided by the applicant (or otherwise obtained) concerning: (1) The applicant's opportunity cost (relative to the next best sewage sludge management option reasonably available to the applicant) should the proposal be rejected, (2) modifications to the original proposal that could further enhance the beneficial use aspects or control any adverse effects of the project as originally proposed, and (3) ways to reduce the agency's costs, such as, cost reimbursement and applicant auditing or monitoring of the project.

—Recognize that, as the land manager, the agency may have an important role in developing permits issued by States or the Environmental Protection Agency which govern the use of sludge, whether or not the agency is a signatory to the permit. In this capacity, Federal land managers may help to develop permit conditions which (1) provide needed management information, through activities such as sludge sampling and site monitoring, (2) determine the rate, frequency, timing, and method of sludge application, (3) incorporate appropriate best management practices to control non-point source pollution of surface waters that might otherwise result from surface runoff during storm events, and (4) provide for any necessary safety practices during the actual application of sludge.

## VI. Judicial Review

This statement is intended only to provide policy guidance to agencies in the exercise of their discretion concerning the management of Federal lands. This statement is not intended to create any right or benefit, substantive or procedural, enforceable at law by a party against the United States, its agencies, its officers or any person. Thus, this statement is not intended to create any substantive or procedural basis on which to challenge any agency action or inaction on the ground that such action or inaction was not in accordance with this statement.

[FR Doc. 91-16969 Filed 7-17-91; 8:45 am]

BILLING CODE 1505-01-M

# Reader Aids

Federal Register

Vol. 56, No. 138

Thursday, July 18, 1991

## INFORMATION AND ASSISTANCE

**Federal Register**

| | |
|---|---|
| Index, finding aids & general information | 523-5227 |
| Public inspection desk | 523-5215 |
| Corrections to published documents | 523-5237 |
| Document drafting information | 523-5237 |
| Machine readable documents | 523-3447 |

**Code of Federal Regulations**

| | |
|---|---|
| Index, finding aids & general information | 523-5227 |
| Printing schedules | 523-3419 |

**Laws**

| | |
|---|---|
| Public Laws Update Service (numbers, dates, etc.) | 523-6641 |
| Additional information | 523-5230 |

**Presidential Documents**

| | |
|---|---|
| Executive orders and proclamations | 523-5230 |
| Public Papers of the Presidents | 523-5230 |
| Weekly Compilation of Presidential Documents | 523-5230 |

**The United States Government Manual**

| | |
|---|---|
| General information | 523-5230 |

**Other Services**

| | |
|---|---|
| Data base and machine readable specifications | 523-3408 |
| Guide to Record Retention Requirements | 523-3187 |
| Legal staff | 523-4534 |
| Library | 523-5240 |
| Privacy Act Compilation | 523-3187 |
| Public Laws Update Service (PLUS) | 523-6641 |
| TDD for the hearing impaired | 523-5229 |

## FEDERAL REGISTER PAGES AND DATES, JULY

29889-30306.....1
30307-30492.....2
30483-30678.....3
30679-30856.....5
30857-31042.....8
31043-31304.....9
31305-31532.....10
31533-31854.....11
31855-32060.....12
32061-32318.....15
32319-32498.....16
32499-32950.....17
32951-33188.....18

## CFR PARTS AFFECTED DURING JULY

At the end of each month, the Office of the Federal Register publishes separately a List of CFR Sections Affected (LSA), which lists parts and sections affected by documents published since the revision date of each title.

**3 CFR**

**Administrative Orders:**

Memorandums:
June 25, 1991.....31041

Presidential Determinations:
No. 91-41 of June 19, 1991.....31303
No. 91-42 of June 21, 1991.....30483
No. 91-43 of June 24, 1991.....31037
No. 91-44 of June 24, 1991.....31039

**Proclamations:**
3019 (See Proc. 6313)
6310.....30303
6311.....30307
6312.....30855
6313.....31853
6314.....32059
6315.....32497

**Executive Orders:**
12473 (See EO 12767).....30283
12484 (See EO 12767).....30283
12532 (Revoked by EO 12769).....31855
12535 (Revoked by EO 12769).....31855
12550 (See EO 12767).....30283
12571 (See EO 12769).....31855
12586 (See EO 12767).....30283
12700 (Amended by EO 12768).....30301
12708 (See EO 12767).....30283
12767.....30283
12768.....30301
12769.....31855

**5 CFR**

532.....31305

**Proposed Rules:**
842.....30701
843.....30701

**7 CFR**

2.....32951
20.....32951
29.....31533
51.....32474
58.....30485
210.....32919
215.....32919
220.....30309, 32919
235.....32919
245.....32919
301.....29889
458.....30489
905.....32061
917.....32062
929.....32499
947.....31534
1005.....31857
1205.....31284
1210.....32063
1220.....31043
1230.....32952
1403.....32319
1530.....30857
1942.....31535
1944.....30311, 30494

**Proposed Rules:**
1.....32340
28.....30618
52.....32121
210.....30339, 32241
235.....30339, 32241
245.....30339, 32241
800.....29907, 30342
810.....29907, 30342
905.....32340
910.....30878, 30879
916.....30881
917.....30881
945.....32128
967.....32129
1007.....32519
1124.....32130
1126.....32131
1205.....31209
1211.....30517
1413.....32132
1421.....29912
1942.....31548
1943.....30347
1951.....30347
1980.....30347
3400.....30256

**8 CFR**

103.....31060, 32500
214.....31305
217.....32952
240.....32500
245a.....31060
251.....31305
258.....31305
338.....30679

**Proposed Rules:**
204.....30703
214.....31553

**9 CFR**

78.....32604, 32605
92.....31858

**Proposed Rules:**
54.....32342

79 ... 32342

**10 CFR**

2 ... 32066
9 ... 32070
20 ... 32071
50 ... 31306
52 ... 31472
55 ... 32066
71 ... 31472
170 ... 31472
171 ... 31472

**Proposed Rules:**

707 ... 30644

**12 CFR**

268 ... 32954
312 ... 29893
563 ... 31061, 32474
584 ... 31061
612 ... 32956
1618 ... 30836

**13 CFR**

107 ... 30850, 31774

**14 CFR**

39 ... 30313-30316, 30319-30324, 30680-30683, 31070-31072, 31324-31326, 31868, 31869, 32072-32075, 32320, 32957, 32958
71 ... 30684, 30685, 31689, 32076, 33961
73 ... 30685
95 ... 30686
97 ... 30317, 32502
129 ... 30122
158 ... 30867
1214 ... 31073

**Proposed Rules:**

21 ... 31879
25 ... 31879
39 ... 30350, 30351, 31881-31885, 32136
71 ... 30353, 30354, 30618, 30883, 32138, 32519-32522, 32991
73 ... 30355
91 ... 30618
207 ... 31092
208 ... 31092
212 ... 31092
241 ... 32992
294 ... 31092
298 ... 31092
380 ... 31092

**15 CFR**

8a ... 29896
29a ... 29896
29b ... 29896

**16 CFR**

305 ... 30494
1000 ... 30495

**Proposed Rules:**

1500 ... 31348, 32352
1700 ... 30355

**17 CFR**

200 ... 30036
201 ... 30036
210 ... 30036
229 ... 30036
230 ... 30036
239 ... 30036
240 ... 30036, 32077
249 ... 30036
260 ... 30036
269 ... 30036
289 ... 32078
290 ... 32081

**Proposed Rules:**

146 ... 32358
240 ... 31349

**18 CFR**

4 ... 31327
284 ... 30692
401 ... 30500

**19 CFR**

4 ... 32084
122 ... 32085
178 ... 32085

**Proposed Rules:**

24 ... 31576

**20 CFR**

**Proposed Rules:**

320 ... 30714
340 ... 32523
404 ... 31266, 33130
416 ... 30884, 33130
656 ... 32244

**21 CFR**

58 ... 32087
520 ... 31075
522 ... 31075
524 ... 31075
558 ... 29896
812 ... 32241

**Proposed Rules:**

101 ... 30452, 30468
102 ... 30452
310 ... 32282
357 ... 32282
864 ... 32359
888 ... 32145

**22 CFR**

40 ... 30422
41 ... 30422
42 ... 30422, 32322
43 ... 30422
44 ... 30422
45 ... 32503
47 ... 32324

**24 CFR**

Subtitle A ... 32325
50 ... 30325
58 ... 30325
86 ... 30430

**Proposed Rules:**

961 ... 30176

**25 CFR**

**Proposed Rules:**

151 ... 32278

**26 CFR**

**Proposed Rules:**

1 ... 30718-30721, 31349, 31350, 31689, 31887-31890, 32525, 32533
20 ... 31362
25 ... 31362
48 ... 30359
301 ... 31362, 31890

**27 CFR**

4 ... 31076
5 ... 31076
6 ... 31076
7 ... 31076
9 ... 31076
19 ... 31076
24 ... 31076
53 ... 31076
70 ... 31076
178 ... 32507
252 ... 31076

**Proposed Rules:**

4 ... 29913

**28 CFR**

0 ... 30693
2 ... 30867-30872
50 ... 32326
64 ... 32327
500 ... 31350
503 ... 31350
524 ... 30676
541 ... 31350
545 ... 31350
546 ... 31350

**Proposed Rules:**

75 ... 29914

**29 CFR**

500 ... 30326
870 ... 32254
1600 ... 30502
2610 ... 32088
2622 ... 32088
2644 ... 32089
2676 ... 32090

**Proposed Rules:**

1910 ... 32302

**30 CFR**

56 ... 32091
57 ... 32091
250 ... 31890, 32091
901 ... 30502, 32509
904 ... 32961

**Proposed Rules:**

218 ... 31891
230 ... 31891
772 ... 32050
913 ... 31577
914 ... 31093
917 ... 30722
920 ... 30517
935 ... 31986
950 ... 31898
963 ... 31094

**Proposed Rules:**

740 ... 33152
761 ... 33152, 33170
772 ... 33152
784 ... 33170
817 ... 33170

**31 CFR**

545 ... 32055

**32 CFR**

Ch. I ... 31085, 31537
192 ... 32964
195 ... 32965
199 ... 32965
286b ... 32965
300 ... 32965
301 ... 32964
352 ... 31537
362 ... 31540
861 ... 30327

**Proposed Rules:**

199 ... 30360, 30887
228 ... 30365

**33 CFR**

1 ... 30242
100 ... 29897-29899, 30507, 31085, 31872-31875
117 ... 30332
165 ... 30334, 30507-30509, 31086, 31876, 32111, 32112

**Proposed Rules:**

100 ... 29916, 31879, 32115
117 ... 32151

**34 CFR**

361 ... 33148

**Proposed Rules:**

361 ... 30620

**35 CFR**

**Proposed Rules:**

101 ... 31362

**36 CFR**

7 ... 30694

**37 CFR**

**Proposed Rules:**

201 ... 31580, 32474

**38 CFR**

21 ... 31331
36 ... 29899

**Proposed Rules:**

3 ... 30893

**39 CFR**

**Proposed Rules:**

265 ... 31363

**40 CFR**

52 ... 30335, 32511, 32512
82 ... 30873
141 ... 30264, 32112, 33050
142 ... 30264, 32212, 33050
143 ... 30264
180 ... 29900, 32514
260 ... 32688
261 ... 30192, 32688, 32993
262 ... 30192
264 ... 30192, 30200, 32688
265 ... 30192, 30200, 32688
266 ... 32688
270 ... 30192, 32688
271 ... 30336, 32328, 32688
721 ... 29902, 29903

**Proposed Rules:**

28 ... 29996
52 ... 29918, 31364
80 ... 29919, 31148-31176, 32533
86 ... 30228, 32533
136 ... 30519
260 ... 30519
261 ... 30519
264 ... 30201
265 ... 30201
280 ... 30201

300 ... 31900
761 ... 30201
798 ... 32537
799 ... 32292

**41 CFR**

50-202 ... 32257

**42 CFR**

405 ... 31332
442 ... 30696
484 ... 32967
**Proposed Rules:**
417 ... 30723, 31597

**43 CFR**

**Public Land Orders:**
6865 ... 32515
**Proposed Rules:**
11 ... 30367
415 ... 31601
3160 ... 29920
3400 ... 32002
3410 ... 32002
3420 ... 32002
3440 ... 32002
3450 ... 32002
3460 ... 32002
3470 ... 32002
3480 ... 32002
3800 ... 31602
3810 ... 30367
3820 ... 30367
4700 ... 30372

**44 CFR**

8 ... 32328
64 ... 31337-31339
65 ... 32329, 32330
67 ... 32330
302 ... 29903
361 ... 32490
**Proposed Rules:**
67 ... 32490

**45 CFR**

**Proposed Rules:**
233 ... 32152
1160 ... 32155

**46 CFR**

16 ... 31030
221 ... 30654
**Proposed Rules:**
586 ... 30373

**47 CFR**

2 ... 32474
73 ... 30337, 30510-30512, 31087, 31545, 31546, 31876, 32113, 32114, 32371, 32372, 32975-32978
90 ... 32515
94 ... 30698
97 ... 32515
**Proposed Rules:**
Ch. I ... 30373
2 ... 31095
73 ... 30374, 30375, 30524-30526, 31902, 32158, 32474, 33013
76 ... 30526, 30726
90 ... 31097

**48 CFR**

232 ... 31341
252 ... 31341
519 ... 30618
1513 ... 32518
1804 ... 32115
1806 ... 32115
1807 ... 32115
1825 ... 32115
1839 ... 32115
1842 ... 32115
1845 ... 32115
1852 ... 32115
1853 ... 32115
**Proposed Rules:**
10 ... 31844
28 ... 31278
52 ... 31278, 31844
209 ... 32159
242 ... 32159

**49 CFR**

1 ... 31343
40 ... 30512
190 ... 31087
192 ... 31087
193 ... 31087
195 ... 31087
199 ... 31087
1017 ... 32333
1039 ... 31546
1051 ... 30873
1152 ... 32336
1220 ... 30873
**Proposed Rules:**
571 ... 30528, 32544
1039 ... 32159

**50 CFR**

17 ... 32978
630 ... 29905, 31347
641 ... 30513
650 ... 30514
663 ... 30338
672 ... 30874, 31547, 32119, 32983
675 ... 30515, 30699, 30874, 32338, 32984
685 ... 31689
**Proposed Rules:**
17 ... 31902
20 ... 32264-32275
298 ... 32160
646 ... 32000
642 ... 29920
646 ... 29922, 32000
651 ... 29934
663 ... 32165
680 ... 30893
685 ... 30376

## LIST OF PUBLIC LAWS

Note: No public bills which have become law were received by the Office of the Federal Register for inclusion in today's **List of Public Laws**.

**Last List July 15, 1991**

# The Federal Register

**Regulations** appear as agency documents which are published daily in the **Federal Register** and codified annually in the **Code of Federal Regulations**

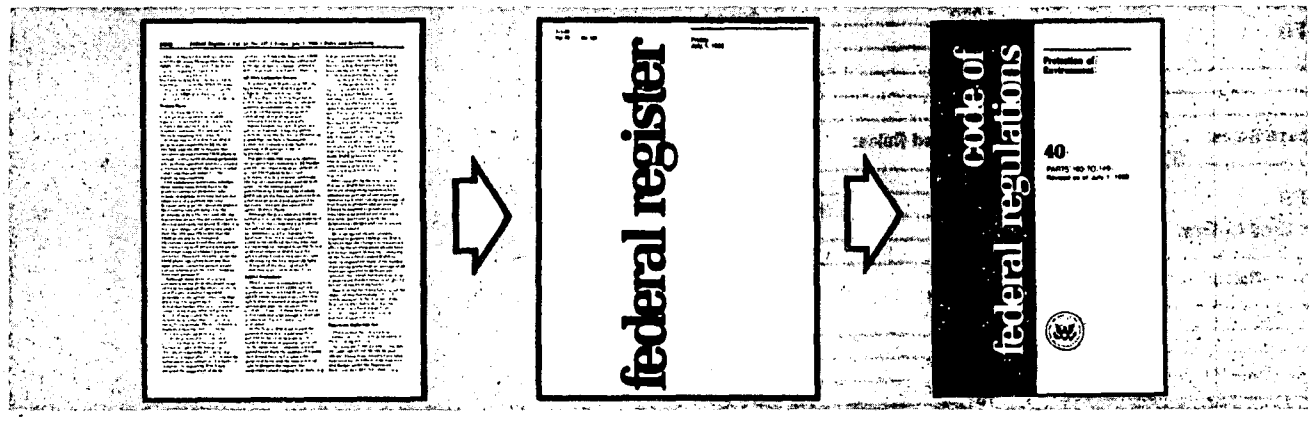


The **Federal Register**, published daily, is the official publication for notifying the public of proposed and final regulations. It is the tool for you to use to participate in the rulemaking process by commenting on the proposed regulations. And it keeps you up to date on the Federal regulations currently in effect.

Mailed monthly as part of a **Federal Register** subscription are: the LSA (List of CFR Sections Affected) which leads users of the **Code of Federal Regulations** to amendatory actions published in the daily **Federal Register**; and the cumulative **Federal Register Index.**

The **Code of Federal Regulations** (CFR) comprising approximately 196 volumes contains the annual codification of the final regulations printed in the **Federal Register**. Each of the 50 titles is updated annually.

Individual copies are separately priced. A price list of current **CFR** volumes appears both in the **Federal Register** each Monday and the monthly **LSA** (List of **CFR** Sections Affected). Price inquiries may be made to the Superintendent of Documents, or the Office of the Federal Register.

## Superintendent of Documents Subscription Order Form

Order Processing Code:

***6463**

***Charge your order. It's easy!*** MasterCard VISA

Charge orders may be telephoned to the GPO order desk at (202) 783-3238 from 8:00 a.m. to 4:00 p.m. eastern time, Monday-Friday (except holidays).

☐ **YES,** please send me the following indicated subscriptions:

- **Federal Register**
  - **Paper:**
    ___$340 for one year
    ___$170 for six-months
  - **24 x Microfiche Format:**
    ___$195 for one year
    ___$97.50 for six-months
  - **Magnetic tape:**
    ___$37,500 for one year
    ___$18,750 for six-months

- **Code of Federal Regulations**
  - **Paper**
    ___$620 for one year
  - **24 x Microfiche Format:**
    ___$188 for one year
  - **Magnetic tape:**
    ___$21,750 for one year

1. The total cost of my order is $_____. All prices include regular domestic postage and handling and are subject to change. International customers please add 25%.

**Please Type or Print**

2. _____
(Company or personal name)

_____
(Additional address/attention line)

_____
(Street address)

_____
(City, State, ZIP Code)

(_____) _____
(Daytime phone including area code)

3. **Please choose method of payment:**

☐ Check payable to the Superintendent of Documents

☐ GPO Deposit Account ☐☐☐☐☐☐☐–☐

☐ VISA or MasterCard Account

☐☐☐☐☐☐☐☐☐☐☐☐☐☐☐☐☐☐☐☐

_____ ***Thank you for your order!***
(Credit card expiration date)

_____
(Signature) (Rev. 2/90)

4. **Mail To:** Superintendent of Documents, Government Printing Office, Washington, D.C. 20402-9371